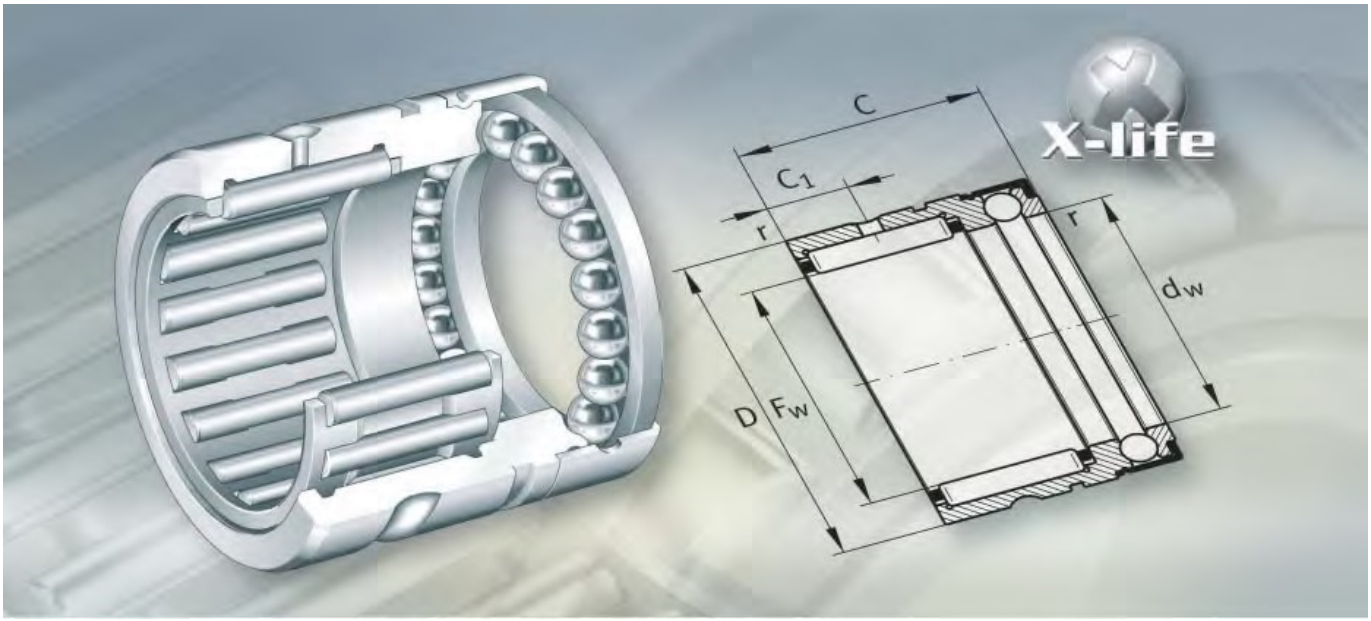

Combined needle roller bearings

Combined needle roller bearings

Needle roller/ axial deep groove ball bearings

Without inner ring
With or without end cap

NX, NX..-Z

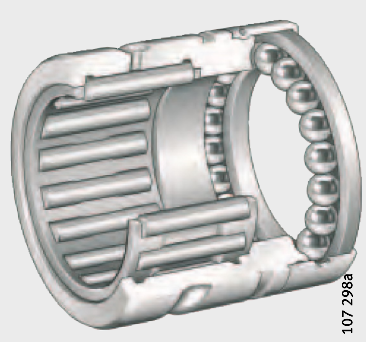

NKX, NKX..-Z

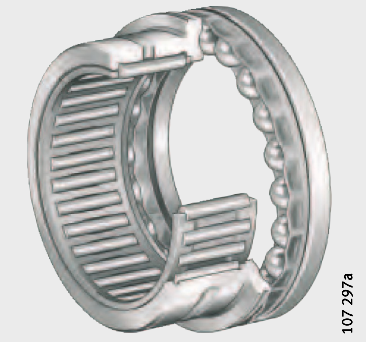

Needle roller/ axial cylindrical roller bearings

Without inner ring
With or without end cap

NKXR, NKXR..-Z

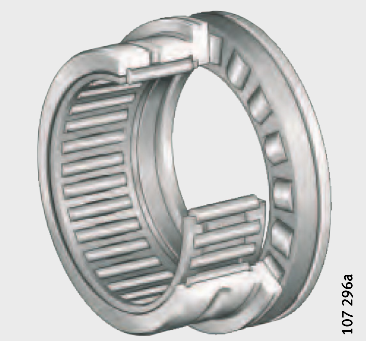

Needle roller/angular contact ball bearings

With inner ring

NKIA

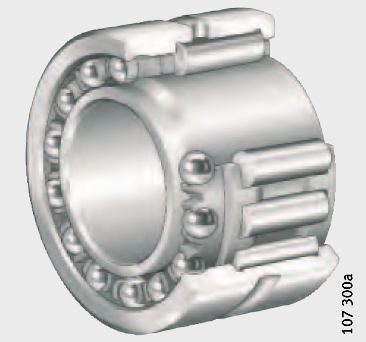

NKIB

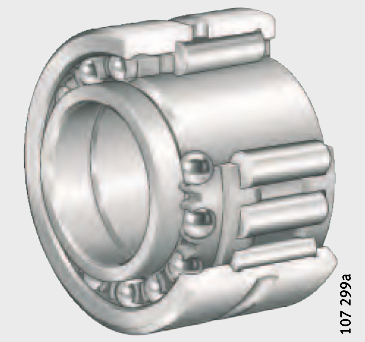

Combined needle roller bearings

Features

These series comprise radial needle roller bearings and a rolling bearing component capable of supporting axial loads. They can support high radial forces as well as axial forces in one direction, while NKIB can support axial forces from both directions, and are used as locating or semi-locating bearings, *Figure 1*.

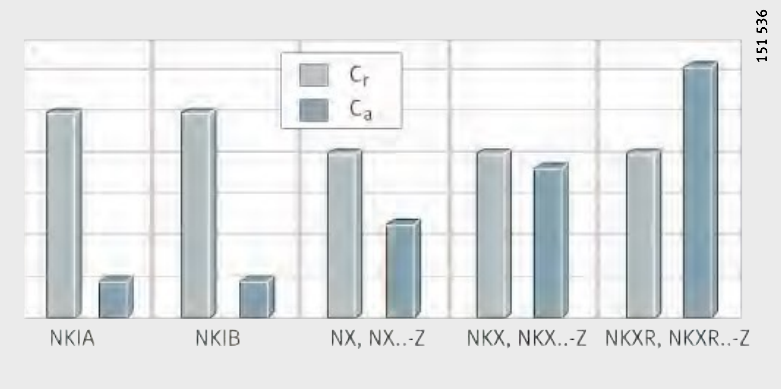

C_r = radial dynamic load carrying capacity
C_a = axial dynamic load carrying capacity

Figure 1
Radial and axial dynamic load carrying capacity

X-life

Combined needle roller bearings are X-life bearings.
These bearings have optimised raceway surfaces.
This gives higher load carrying capacity and longer rating life.

The bearings are available in the following designs:

- needle roller/axial deep groove ball bearings
- needle roller/axial cylindrical roller bearings
- needle roller/angular contact ball bearings.

Needle roller/axial deep groove ball bearings

These series do not have an inner ring and are therefore particularly compact in a radial direction. However, they require a shaft raceway that is hardened and ground.

Bearings NX and NX..-Z have a full complement axial ball bearing component and end caps.

Series NKX and NKX..-Z have an axial bearing component comprising a ball and cage assembly with a sheet steel or plastic cage.
NKX..-Z also has an end cap on the axial bearing component.

Lubrication

For lubrication, the outer ring has a lubrication groove and lubrication holes.

NX and NKX are lubricated with oil.
The end cap in NX has lubrication holes.

NX..-Z and NKX..-Z are lubricated with grease. The axial bearing component is greased using a lithium complex soap grease to GA08.
The end caps do not have lubrication holes.

Combined needle roller bearings

Needle roller/ axial cylindrical roller bearings

These bearings do not have an inner ring and are therefore particularly compact in a radial direction. However, they require a shaft raceway that is hardened and ground.

Series NKXR and NKXR..-Z have an axial bearing component comprising a roller and cage assembly with a plastic cage. NKXR..-Z also has an end cap on the axial bearing component.

Lubrication

For lubrication, the outer ring has a lubrication groove and lubrication holes.

NKXR is lubricated with oil.

NKXR..-Z is intended for grease lubrication. The axial bearing component is greased using a lithium complex soap grease to GA08. The end cap does not have lubrication holes.

Needle roller/ angular contact ball bearings

Combined bearings NKIA and NKIB have an inner ring.

Series NKIA corresponds to DIN 5 429-2. It can support axial loads from one direction.

For alternating axial forces

NKIB has one narrow inner ring and one wide inner ring. The axial bearing component has a plastic ball cage. At the point where the inner rings join, there is a shoulder on both sides for guidance of the ball and cage assembly. As a result, these bearings are also suitable for supporting axial forces alternating in direction.

The bearings guide the shaft with an axial clearance of 0,08 mm to 0,25 mm.

Lubrication

NKIA and NKIB can be lubricated with grease or oil. For lubrication, the outer ring has a lubrication groove and lubrication hole.

Operating temperature

They are suitable for operating temperatures from –20 °C to +120 °C.

Cages

The radial cages are made from sheet steel or plastic. Bearings with a plastic cage have the suffix TV.

Suffixes

Suffixes for available designs: see table.

Available designs

Suffix	Description	Design
TV	Bearing with radial cage made from glass fibre reinforced polyamide 66	Standard
Z	Bearing with end cap Axial bearing component greased with lithium complex soap grease to GA08	

Design and safety guidelines

Minimum radial load

In order to ensure operation without slippage, the bearings must be subjected to a minimum load $F_{r\,min}$ in a radial direction.
This applies in particular to high speed bearings since, if the radial load is insufficient or not present, damaging sliding motion may occur between the rolling elements and raceways.
In continuous operation, a minimum radial load of the order of $C_r/P < 50$ is necessary.

Support of axial forces

The axial bearing component must be preloaded to 1% of the axial basic static load rating C_{0a}.
The basic load ratings C_{0a} are stated in the dimension tables.

Needle roller/axial deep groove ball bearings, needle roller/axial cylindrical roller bearings

In order to support axial forces, the bearing must be abutted by means of snap rings on the outer ring or a housing shoulder.
If there is little distance between the shaft centres, the snap rings should be shortened, *Figure 2*. Snap rings WR and SW are available from trade outlets.

If the bearings are to support axial forces from alternating directions, two bearings must be fitted opposed to each other. The unloaded bearing must be axially preloaded, for example by means of springs. This allows compensation of thermal expansion.

In order to avoid double fits on NKX and NKXR, the axial bearing component must be free in the housing (outside diameter D_1 and D_2+0,5 mm min.).

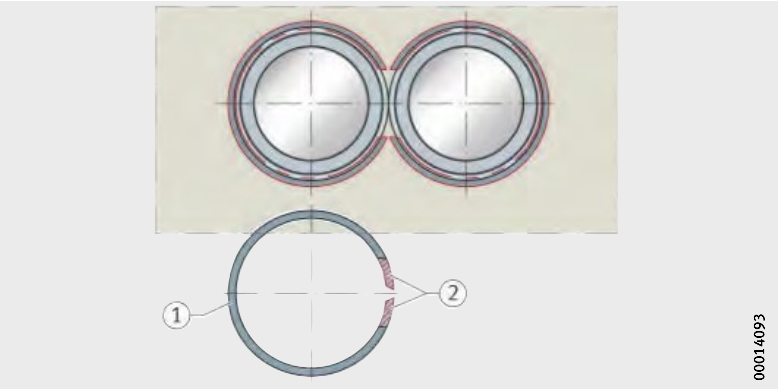

① Snap ring
② Shortened area

Figure 2
Shortened snap rings

Needle roller/ angular contact ball bearings

Series NKIA can support axial forces in one direction, while NKIB can support axial forces in both directions.

If bearings NKIA are to support axial forces from alternating directions, two bearings must be fitted opposed to each other, *Figure 3*.

In the case of NKIB, the wide and narrow inner ring must be axially clamped against each other. The narrow inner ring has a larger bore diameter. This results in an interference fit if a shaft tolerance k6 is used.

NKIA

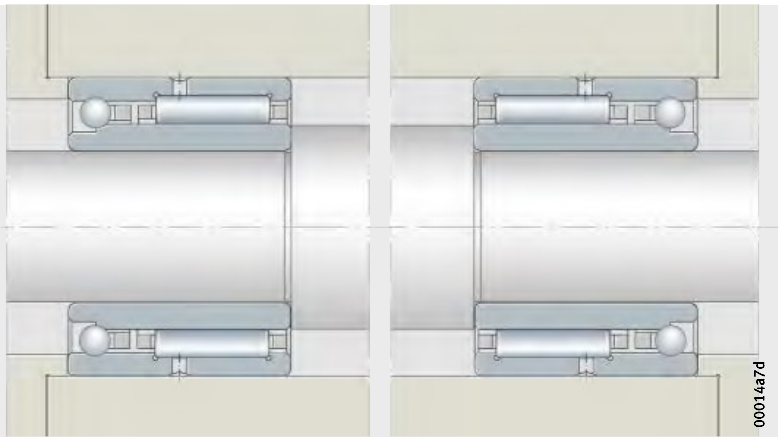

Figure 3
Two bearings adjusted against each other

Axial static load safety factor

The axial load must not exceed 25% of the radial load.

The axial static load safety factor S_0 must be $> 1,5$.

Speeds

The limiting speeds n_G in the dimension tables are valid for oil lubrication.

With grease lubrication, the permissible value is 60% of the value in the table.

The reference speed n_B for NKXR, NKXR..-Z, NKIA, NKIB is given in the dimension tables. In order to calculate the thermally safe operating speed n_{per}, NKXR(Z) must be regarded as axial bearings, while NKIA and NKIB must be regarded as radial bearings.

Lubrication

In bearings with grease lubrication, the radial bearing component should be greased before initial operation using a grease of similar quality to that used in the axial bearing component.

In order to determine the relubrication interval, values must be calculated separately for the axial and radial bearing components and the lower value should be used.

Design of bearing arrangements

Shaft and housing tolerances

Recommended shaft and housing tolerances are given in the following tables.

Mounting dimensions

As far as possible, the dimension tables give the maximum value of the radius r_a and the diameters of the abutment shoulders d_a.

Raceway for bearings without inner ring

Where bearings without an inner ring are to be used, the rolling element raceway on the shaft must be hardened and ground, see tables. The surface hardness of the raceway must be 670 HV + 170 HV, the hardening depth CHD or SHD must be sufficiently large.

If the shaft cannot be configured as a raceway, inner rings of series IR can be used. The inner rings must be ordered separately. Inner rings: see page 776.

For NKIA and NKIB, the shaft tolerance must not be greater than k6 and the bore tolerance must not be less than M6.

If the surface of the shaft raceway is produced to DIN 617, the basic load ratings C_r in the dimension tables must be reduced by 15%.

Tolerances for shaft raceway and housing bore

Series	Shaft tolerance		Bore tolerance
	For bearings without inner ring	For bearings with inner ring	
NKIA, NKIB	–	k6	M6
NX, NKX, NKXR	k6		K6, M6 (for rigid bearing arrangement)

Surfaces for shaft raceway and housing bore

Surface	Shaft raceway		Housing bore
	For bearings without inner ring	For bearings with inner ring	
Roughness max.	R_a0,1 (R_z0,4)	–	–
Roundness max.	IT3	IT 4/2	IT 5/2
Parallelism max.	IT3	IT 4	IT 4

Replacement of inner rings

Combined needle roller bearings are not self-retaining.

In the standard bearings of series NKIA and NKIB, the inner rings are matched to the enveloping circle tolerance F6 and can be interchanged with each other within the same accuracy class.

Radial location

Bearings with an inner ring are radially located by means of a fit on the shaft and in the housing.

Axial location

The abutment shoulders (shaft, housing) should be sufficiently high and perpendicular to the bearing axis. The transition from the bearing seat to the abutment shoulder must be designed with rounding to DIN 5 418 or an undercut to DIN 509.
The minimum values for the chamfer dimensions r in the dimension tables must be observed.

The overlap between the snap rings and the end faces of the bearing rings must be sufficiently large.

Maximum inner ring chamfer dimensions to DIN 620-6 must be taken into consideration.

In order to prevent lateral creep of the bearing rings, they must be located by means of physical locking. For locating bearings and for bearings with a split inner ring, axial abutment of the bearing rings on both sides is particularly important.

Accuracy

The dimensional and geometrical tolerances correspond to tolerance class PN to DIN 620. This excludes bearings NKIB, the bore d_1 of the narrow inner ring and the width (–0,3 mm) over both inner rings as well as bearings NKX and NKXR with diameters D_1, D_2.

Radial internal clearance

Bearings with inner ring have a radial internal clearance CN to DIN 620-4.

Radial internal clearance

Bore d mm		Radial internal clearance CN µm	
over	incl.	min.	max.
–	24	20	45
24	30	20	45
30	40	25	50
40	50	30	60
50	65	40	70
65	80	40	75
80	100	50	85

Enveloping circle

In the case of bearings without an inner ring, the dimension for the enveloping circle F_w is used instead of the radial internal clearance.

The enveloping circle is the inner inscribed circle of the needle rollers in clearance-free contact with the outer raceway.

For bearings before fitting, the enveloping circle F_w is in the tolerance zone F6.
Deviations for the tolerance zone F6: see table, page 168.

Needle roller/ axial deep groove ball bearings

Without inner ring

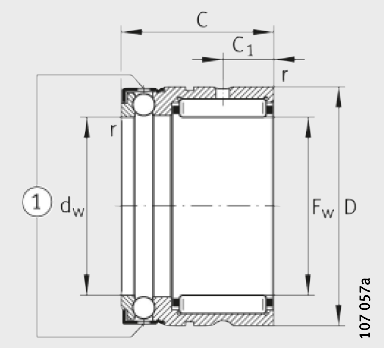

NX
1 Oil holes

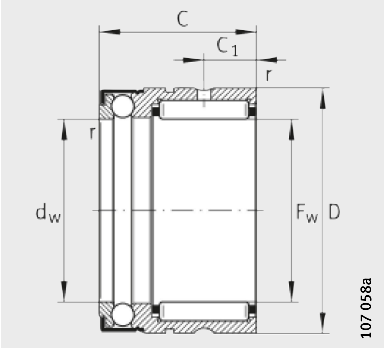

NX..-Z

Dimension table · Dimensions in mm

Designation				Dimensions						Mounting dimensions			
For oil lubrication	For grease lubrication	X-life	Mass m ≈g	F_w	D	C −0,25	C_1	d_w E8	r min.	C_2	D_1	d_a	r_a max.
NX7-TV	**NX7-Z-TV**	**XL**	14	**7**	14	18	4,7	7	0,3	10	16,5	9,6	0,3
NX10	**NX10-Z**	**XL**	25	**10**	19	18	4,7	10	0,3	10	21,9	14,6	0,3
NX12	**NX12-Z**	**XL**	28	**12**	21	18	4,7	12	0,3	10	23,7	16,6	0,3
NX15	**NX15-Z**	**XL**	48	**15**	24	28	8	15	0,3	12,2	26,5	19	0,3
NX17	**NX17-Z**	**XL**	53	**17**	26	28	8	17	0,3	12,2	28,5	21	0,3
NX20	**NX20-Z**	**XL**	68	**20**	30	28	8	20	0,3	12,2	33,6	25	0,3
NX25	**NX25-Z**	**XL**	115	**25**	37	30	8	25	0,3	14,2	40,4	31,6	0,3
NX30	**NX30-Z**	**XL**	130	**30**	42	30	10	30	0,3	14,2	45,1	36,5	0,3
NX35	**NX35-Z**	**XL**	160	**35**	47	30	10	35	0,3	14,2	50,1	40,5	0,3

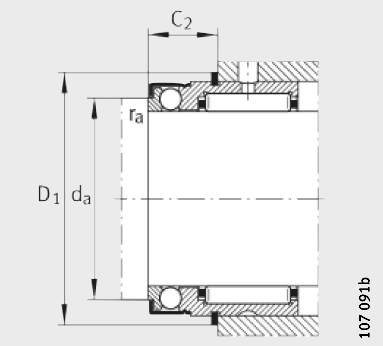

Mounting dimensions
Snap ring in outer ring

Basic load ratings				Fatigue limit load		Limiting speed	Recommended inner rings Designation	Suitable snap rings
radial		axial		C_{ur}	C_{ua}	n_G		
dyn. C_r N	stat. C_{0r} N	dyn. C_a N	stat. C_{0a} N	N	N	min^{-1}		
3 250	2 650	3 150	4 300	410	190	15 000	–	**WR14, SW14**
5 000	3 700	4 600	7 200	720	320	11 000	**IR6X10X10-IS1**	**WR19, SW19**
5 400	4 300	4 850	8 200	830	365	9 500	**IR8X12X10-IS1**	**WR21, SW21**
12 100	12 700	5 600	10 400	2 320	460	8 000	**IR12X15X16**	**WR24, SW24**
13 500	15 000	5 800	11 500	2 750	510	7 500	**IR14X17X17**	**WR26, SW26**
14 600	17 500	7 000	14 700	3 200	650	6 500	**IR17X20X16**	**WR30, SW30**
16 800	22 400	11 100	24 300	4 150	1 080	4 900	**IR20X25X16-IS1**	**WR37, SW37**
25 500	36 000	11 700	28 000	6 300	1 230	4 300	**IR25X30X20**	**WR42, SW42**
27 500	41 500	12 400	32 500	7 300	1 440	3 700	**IR30X35X20**	**WR47, SW47**

Needle roller/ axial deep groove ball bearings

Without inner ring
With or without end cap

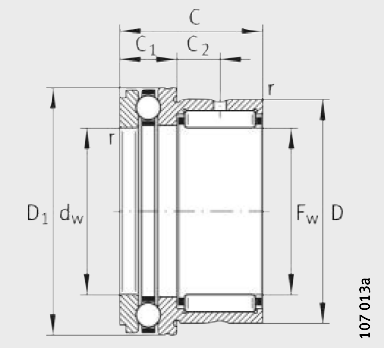

NKX

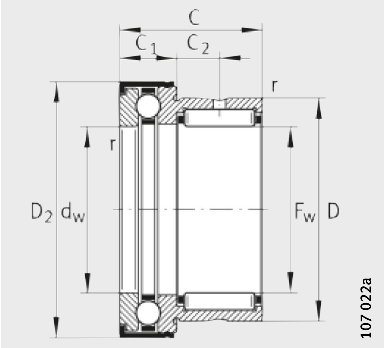

NKX..-Z

Dimension table · Dimensions in mm

Without end cap Designation		Mass	With end cap Designation		Mass	Dimensions					
	X-life	m ≈g		X-life	m ≈g	F_w	D	D_1 max.	D_2 max.	C −0,25	C_1 −0,2
NKX10-TV	**XL**	34	**NKX10-Z-TV**	**XL**	36	**10**	19	24,1	25,2	23	9
NKX12	**XL**	38	**NKX12-Z**	**XL**	40	**12**	21	26,1	27,2	23	9
NKX15	**XL**	44	**NKX15-Z**	**XL**	47	**15**	24	28,1	29,2	23	9
NKX17	**XL**	53	**NKX17-Z**	**XL**	55	**17**	26	30,1	31,2	25	9
NKX20	**XL**	83	**NKX20-Z**	**XL**	90	**20**	30	35,1	36,2	30	10
NKX25	**XL**	125	**NKX25-Z**	**XL**	132	**25**	37	42,1	43,2	30	11
NKX30	**XL**	141	**NKX30-Z**	**XL**	148	**30**	42	47,1	48,2	30	11
NKX35	**XL**	163	**NKX35-Z**	**XL**	168	**35**	47	52,1	53,2	30	12
NKX40	**XL**	200	**NKX40-Z**	**XL**	208	**40**	52	60,1	61,2	32	13
NKX45	**XL**	252	**NKX45-Z**	**XL**	265	**45**	58	65,2	66,5	32	14
NKX50	**XL**	280	**NKX50-Z**	**XL**	300	**50**	62	70,2	71,5	35	14
NKX60	**XL**	360	**NKX60-Z**	**XL**	380	**60**	72	85,2	86,5	40	17
NKX70	**XL**	500	**NKX70-Z**	**XL**	520	**70**	85	95,2	96,5	40	18

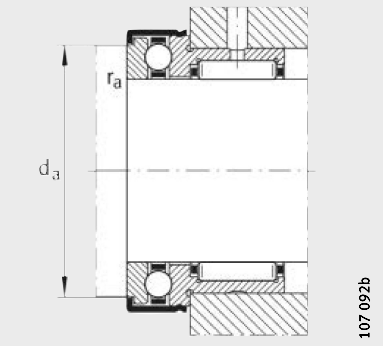

Mounting dimensions

			Mounting dimensions		Basic load ratings				Fatigue limit load		Limiting speed	Recommended inner rings Designation
C_2	d_w	r	d_a	r_a	radial		axial		C_{ur}	C_{ua}	n_G	
					dyn. C_r	stat. C_{0r}	dyn. C_a	stat. C_{0a}				
	E8	min.		max.	N	N	N	N	N	N	min^{-1}	
6,5	10	0,3	19,7	0,3	7 000	7 800	10 000	14 000	1 310	670	12 400	**IR7X10X16**
6,5	12	0,3	21,7	0,3	10 100	11 000	10 300	15 400	1 920	740	10 900	**IR9X12X16**
6,5	15	0,3	23,7	0,3	12 100	12 700	10 500	16 800	2 320	810	9 200	**IR12X15X16**
8	17	0,3	25,7	0,3	13 500	15 000	10 800	18 200	2 750	870	8 400	**IR14X17X17**
10,5	20	0,3	30,7	0,3	18 600	23 800	14 300	24 700	4 150	1 190	7 200	**IR17X20X20**
9,5	25	0,6	37,7	0,6	21 300	30 500	19 600	37 500	5 300	1 790	5 800	**IR20X25X20**
9,5	30	0,6	42,7	0,6	25 500	36 000	20 400	42 000	6 300	2 030	5 000	**IR25X30X20**
9	35	0,6	47,7	0,6	27 500	41 500	21 200	47 000	7 300	2 270	4 400	**IR30X35X20**
10	40	0,6	55,7	0,6	29 500	47 000	27 000	63 000	8 300	3 000	3 900	**IR35X40X20**
9	45	0,6	60,5	0,6	31 000	53 000	28 000	69 000	9 300	3 350	3 500	**IR40X45X20**
10	50	0,6	65,5	0,6	43 000	74 000	29 000	75 000	12 700	3 650	3 200	**IR45X50X25**
12	60	1	80,5	1	47 500	90 000	41 500	113 000	15 400	5 400	2 750	**IR50X60X25**
11	70	1	90,5	1	50 000	92 000	43 000	127 000	15 700	6 100	2 320	**IR60X70X25**

Needle roller/ axial cylindrical roller bearings

Without inner ring
With or without end cap

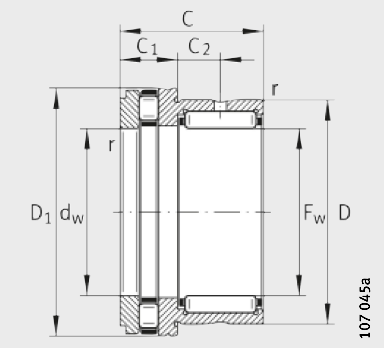

NKXR

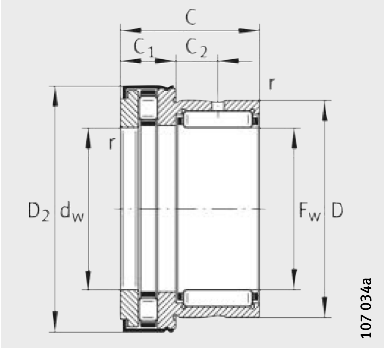

NKXR..-Z

Dimension table · Dimensions in mm

Without end cap Designation		Mass	With end cap Designation		Mass	Dimensions					
	X-life	m ≈g		X-life	m ≈g	F_w	D	D_1 max.	D_2 max.	C −0,25	C_1 −0,2
NKXR15	**XL**	42	**NKXR15-Z**	**XL**	45	**15**	24	28,1	29,2	23	9
NKXR17	**XL**	50	**NKXR17-Z**	**XL**	53	**17**	26	30,1	31,2	25	9
NKXR20	**XL**	80	**NKXR20-Z**	**XL**	84	**20**	30	35,1	36,2	30	10
NKXR25	**XL**	120	**NKXR25-Z**	**XL**	125	**25**	37	42,1	43,2	30	11
NKXR30	**XL**	135	**NKXR30-Z**	**XL**	141	**30**	42	47,1	48,2	30	11
NKXR35	**XL**	157	**NKXR35-Z**	**XL**	165	**35**	47	52,1	53,2	30	12
NKXR40	**XL**	204	**NKXR40-Z**	**XL**	214	**40**	52	60,1	61,2	32	13
NKXR45	**XL**	244	**NKXR45-Z**	**XL**	260	**45**	58	65,2	66,5	32	14
NKXR50	**XL**	268	**NKXR50-Z**	**XL**	288	**50**	62	70,2	71,5	35	14

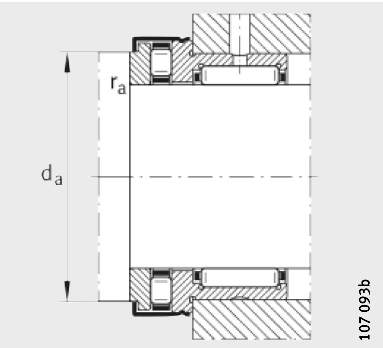

Mounting dimensions

			Mounting dimensions		Basic load ratings				Fatigue limit load		Limiting speed	Reference speed	Recommended inner rings Designation
C_2	d_w	r	d_a	r_a	radial		axial		C_{ur}	C_{ua}	n_G	n_B	
					dyn. C_r	stat. C_{0r}	dyn. C_a	stat. C_{0a}					
	E8	min.		max.	N	N	N	N	N	N	min^{-1}	min^{-1}	
6,5	15	0,3	23,7	0,3	12 100	12 700	14 400	28 500	2 320	4 000	9 200	6 500	**IR12X15X16**
8	17	0,3	25,7	0,3	13 500	15 000	15 900	33 500	2 750	4 650	8 400	5 500	**IR14X17X17**
10,5	20	0,3	30,7	0,3	18 600	23 800	24 900	53 000	4 150	7 300	7 200	4 200	**IR17X20X20**
9,5	25	0,6	37,7	0,6	21 300	30 500	33 500	76 000	5 300	7 100	5 800	3 400	**IR20X25X20**
9,5	30	0,6	42,7	0,6	25 500	36 000	35 500	86 000	6 300	8 000	5 000	2 900	**IR25X30X20**
9	35	0,6	47,7	0,6	27 500	41 500	39 000	101 000	7 300	9 500	4 400	2 500	**IR30X35X20**
10	40	0,6	55,7	0,6	29 500	47 000	56 000	148 000	8 300	14 500	3 900	2 000	**IR35X40X20**
9	45	0,6	60,6	0,6	31 000	53 000	59 000	163 000	9 300	16 000	3 500	1 900	**IR40X45X20**
10	50	0,6	65,5	0,6	43 000	74 000	61 000	177 000	12 700	17 400	3 200	1 700	**IR45X50X25**

Needle roller/angular contact ball bearings

With inner ring

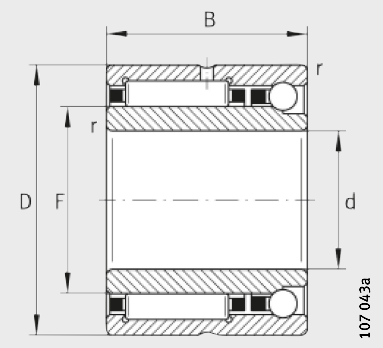

NKIA
Single direction

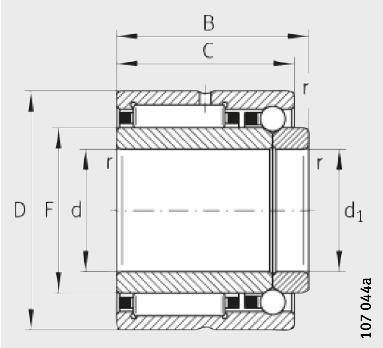

NKIB
Double direction

Dimension table · Dimensions in mm

Designation		Mass	Dimensions						Basic load ratings	
		m	d	F	D	B	C	r	radial	
	X-life	≈g						min.	dyn. C_r N	stat. C_{0r} N
NKIA5901	**XL**	40	**12**	16	24	16	–	0,3	8 600	8 300
NKIB5901	**XL**	43	**12**	16	24	17,5	16	0,3	8 600	8 300
NKIA5902	**XL**	50	**15**	20	28	18	–	0,3	12 000	13 600
NKIB5902	**XL**	52	**15**	20	28	20	18	0,3	12 000	13 600
NKIA5903	**XL**	56	**17**	22	30	18	–	0,3	12 400	14 600
NKIB5903	**XL**	58	**17**	22	30	20	18	0,3	12 400	14 600
NKIA5904	**XL**	103	**20**	25	37	23	–	0,3	23 700	25 500
NKIB5904	**XL**	107	**20**	25	37	25	23	0,3	23 700	25 500
NKIA59/22	**XL**	118	**22**	28	39	23	–	0,3	26 000	29 500
NKIB59/22	**XL**	122	**22**	28	39	25	23	0,3	26 000	29 500
NKIA5905	**XL**	130	**25**	30	42	23	–	0,3	26 500	31 500
NKIB5905	**XL**	134	**25**	30	42	25	23	0,3	26 500	31 500
NKIA5906	**XL**	147	**30**	35	47	23	–	0,3	28 500	35 500
NKIB5906	**XL**	151	**30**	35	47	25	23	0,3	28 500	35 500
NKIA5907	**XL**	243	**35**	42	55	27	–	0,6	35 500	50 000
NKIB5907	**XL**	247	**35**	42	55	30	27	0,6	35 500	50 000
NKIA5908	**XL**	315	**40**	48	62	30	–	0,6	48 500	67 000
NKIB5908	**XL**	320	**40**	48	62	34	30	0,6	48 500	67 000
NKIA5909	**XL**	375	**45**	52	68	30	–	0,6	51 000	73 000
NKIB5909	**XL**	380	**45**	52	68	34	30	0,6	51 000	73 000
NKIA5910	**XL**	380	**50**	58	72	30	–	0,6	53 000	80 000
NKIB5910	**XL**	385	**50**	58	72	34	30	0,6	53 000	80 000
NKIA5911	**XL**	550	**55**	63	80	34	–	1	65 000	100 000
NKIB5911	**XL**	555	**55**	63	80	38	34	1	65 000	100 000
NKIA5912	**XL**	590	**60**	68	85	34	–	1	68 000	108 000
NKIB5912	**XL**	595	**60**	68	85	38	34	1	68 000	108 000
NKIA5913	**XL**	635	**65**	72	90	34	–	1	69 000	112 000
NKIB5913	**XL**	640	**65**	72	90	38	34	1	69 000	112 000
NKIA5914	**XL**	980	**70**	80	100	40	–	1	95 000	156 000
NKIB5914	**XL**	985	**70**	80	100	45	40	1	95 000	156 000