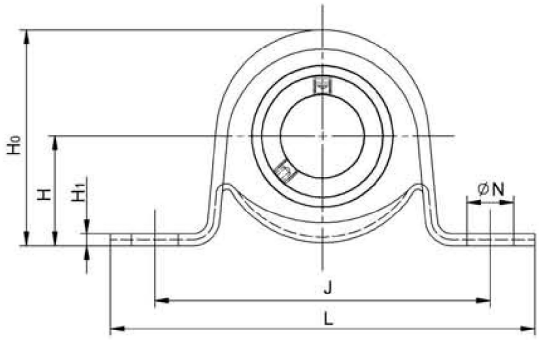

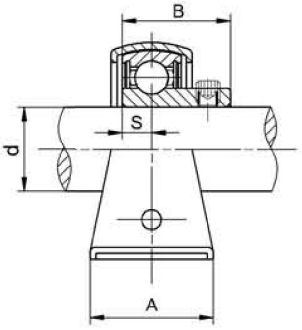

• SBPP200

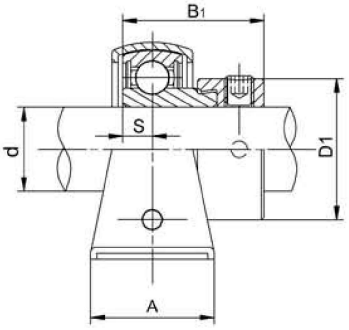

• SAPP200

SBPP200 Series

Unit No.	Shaft Dia d (in)	Shaft Dia d (mm)	Dimensions(mm) L	J	H	H_1	H_0	N	A	B	S	Bolt Size (mm)	Weight (kg)
SBPP 201 201-8 202 202-10 203 203-11	1/2 5/8 11/16	12 15 17	86	68	22.2	2.4	43.4	9.5	25	22	6	M8	0.15
SBPP 204 204-12	3/4	20	98	76	25.4	3	50.4	9.5	32	25	7	M8	0.22
SBPP 205 205-14 205-15 205-16	7/8 15/16 1	25	108	86	28.6	4	56.5	11.5	32	27	7.5	M10	0.31
SBPP 206 206-18 206-19 206-20	1-1/8 1-3/16 11/4	30	117	95	33.3	4	66.3	11.5	38	30	8	M10	0.43
SBPP 207 207-20 207-21 207-22 207-23	1-1/4 1-5/16 1-3/8 1-7/16	35	130	106	39.7	5	78.2	11.5	43	32	8.5	M10	0.63
SBPP 208 208-24 208-25	1-1/2 1-9/16	40	148	120	43.7	5	85.8	12	44	34	9	M10	0.9
SBPP 209 209-26 209-27 209-28	1-5/8 1-11/16 1-3/4	45	156	128	46.8	6	92.3	13	46	36	9.5	M10	1.20

SAPP200 Series

Unit No.	Shaft Dia d (in)	Shaft Dia d (mm)	Dimensions(mm) L	J	H	H_1	H_0	N	A	d_1	B_1	S	Bolt Size (mm)	Bolt Size (in)	Weight (kg)
SAPP 201 201-8 202 202-10 203 203-11	1/2 5/8 11/16	12 15 17	86	68	22.2	2.4	43.4	9.5	25	28.6	28.6	6	M6	1/4	0.26
SAPP 204 204-12	3/4	20	98	76	25.4	3	50.4	9.5	32	33.3	31	7	M8	5/16	0.31
SAPP 205 205-14 205-15 205-16	7/8 15/16 1	25	108	86	28.6	4	56.5	11.5	32	38.1	31.5	7.5	M8	5/16	0.38
SAPP 206 206-18 206-19 206-20	1-1/8 1-3/16 11/4	30	117	95	33.3	4	66.3	11.5	38	44.5	35.7	8	M10	3/8	0.56
SAPP 207 207-20 207-21 207-22 207-23	1-1/4 1-5/16 1-3/8 1-7/16	35	130	106	39.7	5	78.2	11.5	43	55.6	38.9	8.5	M10	3/8	0.8
SAPP 208 208-24 208-25	1-1/2 1-9/16	40	148	120	43.7	5	85.8	12	44	60.3	43.7	9	M12	1/2	1.07
SAPP 209 209-26 209-27 209-28	1-5/8 1-11/16 1-3/4	45	156	128	46.8	6	92.3	13	46	63.5	43.7	9.5	M12	1/2	1.24

LDK®

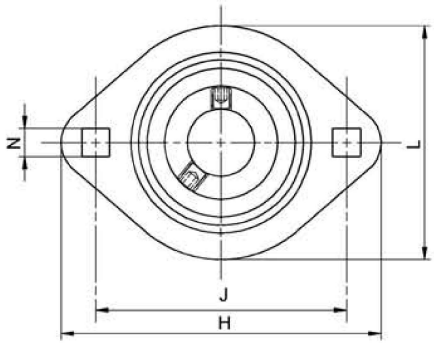

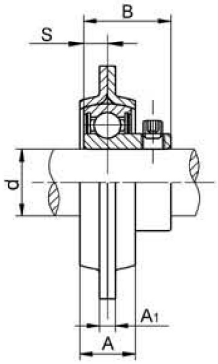

•SBPFL200

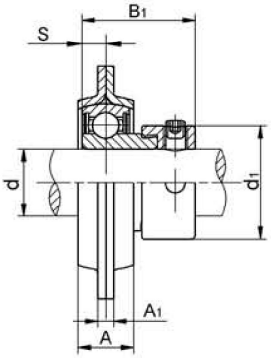

•SAPFL200

SBPFL200 Series

Unit No.	Shaft Dia d		Dimensions(mm)								Bolt Size		Weight (kg)
	(in)	(mm)	H	J	L	A	A1	N	B	S	(mm)	(in)	
SBPFL 201 201-8	1/2	12	81	63.5	59	14	4	7	22	6	M6	1/4	0.23
202 202-10	5/8	15											
203 203-11	11/16	17											
SBPFL 204 204-12	3/4	20	90	71.7	67	17	4	9	25	7	M8	5/16	0.26
SBPFL 205 205-14	7/8	25	95	76	71	18	4	9	27	7.5	M8	5/16	0.35
205-15	15/16												
205-16	1												
SBPFL 206 206-18	1-1/8	30	113	90.5	84	19	5	11	30	8	M10	3/8	0.46
206-19	1-3/16												
206-20	1-1/4												
SBPFL 207 207-20	1-1/4	35	122	100	94	22	5	11	32	8.5	M10	3/8	0.73
207-21	1-5/16												
207-22	1-3/8												
207-23	1-7/16												
SBPFL 208 208-24	1-1/2	40	147	119	105	23	7	13.5	34	9	M12	1/2	0.94
208-25	1-9/16												

SAPFL200 Series

Unit No.	Shaft Dia d		Dimensions(mm)									Bolt Size		Weight (kg)
	(in)	(mm)	H	J	L	A	A1	d1	N	B1	S	(mm)	(in)	
SAPFL 201 201-8	1/2	12	81	63.5	59	14	4	28.6	7	22	6	M6	1/4	0.34
202 202-10	5/8	15												
203 203-11	11/16	17												
SAPFL 204 204-12	3/4	20	90	71.7	67	17	4	33.3	9	25	7	M8	5/16	0.35
SAPFL 205 205-14	7/8	25	95	76	71	18	4	38.1	9	27	7.5	M8	5/16	0.42
205-15	15/16													
205-16	1													
SAPFL 206 206-18	1-1/8	30	113	90.5	84	19	5	44.5	11	30	8	M10	3/8	0.59
206-19	1-3/16													
206-20	1-1/4													
SAPFL 207 207-20	1-1/4	35	122	100	94	22	5	55.6	11	32	8.5	M10	3/8	0.9
207-21	1-5/16													
207-22	1-3/8													
207-23	1-7/16													
SAPFL 208 208-24	1-1/2	40	147	119	105	23	7	60.3	13.5	34	9	M12	1/2	1.11
208-25	1-9/16													

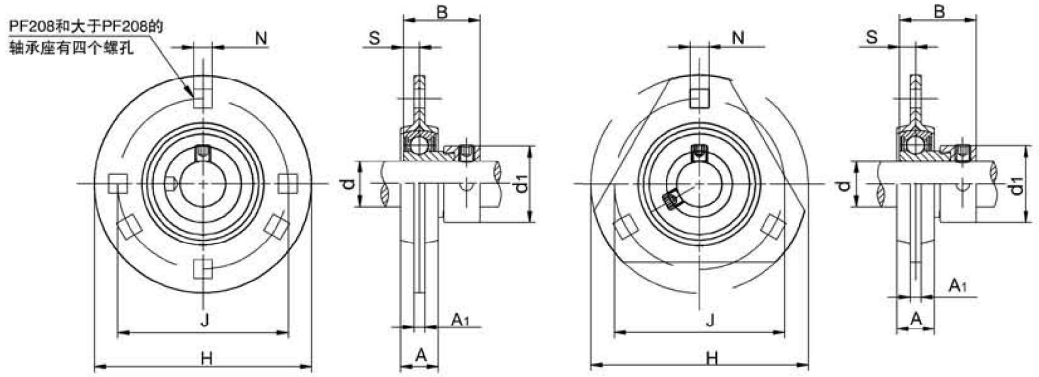

• SAPF200 • SAPFT200

SAPF200 SAPFT200 Series

Unit No.		Shaft Dia d (in)	Shaft Dia d (mm)	Dimensions(mm) H	J	A	A_1	d_1	N	B_1	S	Bolt Size (mm)	Bolt Size (in)	Weight (kg)
SAPF SAPFT	201		12	81	63.5	14	4	28.6	7	28.6	6	M6	1/4	0.24
	201-8	1/2												
	202		15											
	202-10	5/8												
	203		17											
	203-11	11/16												
	204		20	90	71	16	4	33.3	9	31	7	M8	5/16	0.35
	204-12	3/4												
	205		25	95	76	19	4	38.1	9	31.5	7.5	M8	5/16	0.42
	205-14	7/8												
	205-15	15/16												
	205-16	1												
	206		30	113	90	19	5	44.5	11	35.7	8	M10	3/8	0.59
	206-18	1-1/8												
	206-19	1-3/16												
	206-20	1-1/4												
	207		35	122	100	20	5	55.6	11	38.9	8.5	M10	3/8	0.9
	207-20	1-1/4												
	207-21	1-5/16												
	207-22	1-3/8												
	207-23	1-7/16												
	208		40	148	119	21	7	60.3	13.5	43.7	9	M12	1/2	1.11
	208-24	1-1/2												
	208-25	1-9/16												
	209		45	149	120.5	23	7	63.5	13.5	43.7	9.5	M12	1/2	1.48
	209-26	1-5/8												
	209-27	1-11/16												
	209-28	1-3/4												
	210		50	157	127	26	8	63.5	13.5	43.7	10	M12	1/2	
	210-30	1-7/8												
	210-31	1-15/16												
	211		55	168	138	26	8	63.5	13.5	48.4	10.5	M12	1/2	
	211-32	2												
	211-34	2-1/8												
	211-35	2-3/16												
	212		60	177	148	28	8	63.5	13.5	53.1	11	M12	1/2	
	212-36	2-1/4												
	212-38	2-3/8												
	212-39	2-7/16												

PF208~212 with 4 bolt holes.

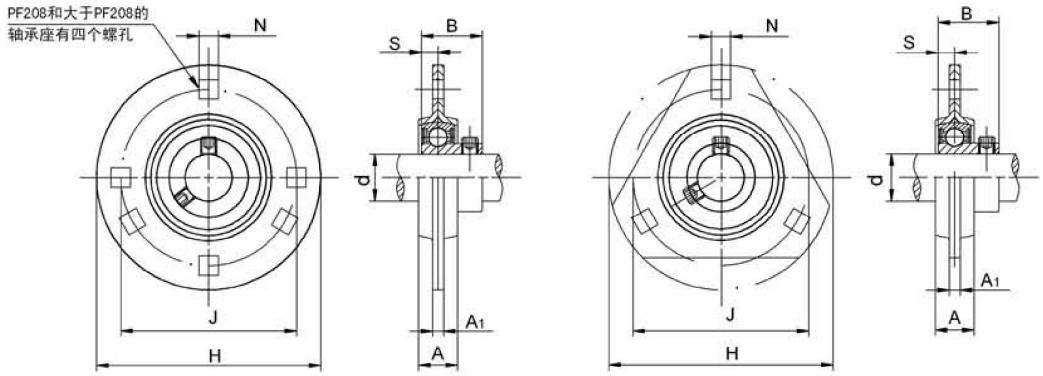

• SBPF200 • SBPFT200

SBPF200 SBPFT200 Series

Unit No.		Shaft Dia d (in)	Shaft Dia d (mm)	Dimensions(mm) H	J	A	A1	N	B	S	Bolt Size (mm)	Bolt Size (in)	Weight (kg)
SBPF SBPFT	201		12	81	63.5	14	4	7	22	6	M6	1/4	0.23
	201-8	1/2											
	202		15										
	202-10	5/8											
	203		17										
	203-11	11/16											
	204		20	90	71	16	4	9	25	7	M8	5/16	0.26
	204-12	3/4											
	205		25	95	76	19	4	9	27	7.5	M8	5/16	0.35
	205-14	7/8											
	205-15	15/16											
	205-16	1											
	206		30	113	90	19	5	11	30	8	M10	3/8	0.46
	206-18	1-1/8											
	206-19	1-3/16											
	206-20	1-1/4											
	207		35	122	100	20	5	11	32	8.5	M10	3/8	0.73
	207-20	1-1/4											
	207-21	1-5/16											
	207-22	1-3/8											
	207-23	1-7/16											
	208		40	148	119	21	7	13.5	34	9	M12	1/2	0.94
	208-24	1-1/2											
	208-25	1-9/16											
	209		45	149	120.5	23	7	13.5	36	9.5	M12	1/2	1.44
	209-26	1-5/8											
	209-27	1-11/16											
	209-28	1-3/4											
	210		50	157	127	26	8	13.5	38	10	M12	1/2	
	210-30	1-7/8											
	210-31	1-15/16											
	211		55	168	138	26	8	13.5	40	10.5	M12	1/2	
	211-32	2											
	211-34	2-1/8											
	211-35	2-3/16											
	212		60	177	148	28	8	13.5	42	11	M12	1/2	
	212-36	2-1/4											
	212-38	2-3/8											
	212-39	2-7/16											

PF208~212 with 4 bolt holes.

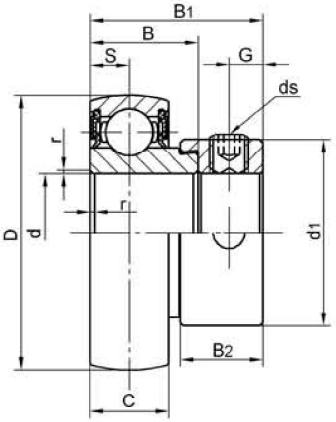

U000 SU000 Series

Unit No.		Shaft d(mm)	Dimensions(mm)										Basic Load Rating kgf		Weight (kg)
Chrome Steel	Stainless Steel		D	B	C	S	B1	B2	d1	r	G	ds	Dynamic Cr	Static Cor	
U 000	SU 000	10	26	11	8	4	17.7	8.5	17	0.5	3.5	M4X0.7	3.50	1.73	0.03
U 001	SU 001	12	28	11	8	4	17.7	8.5	19	0.5	3.5	M4X0.7	3.93	2.39	0.04
U 002	SU 002	15	32	12	9	4.5	18.7	8.5	22	0.5	3.5	M4X0.7	4.30	2.51	0.05
U 003	SU 003	17	35	13.5	10	5	20.7	9.5	25	0.5	3.5	M4X0.7	4.62	2.79	0.07
U 004	SU 004	20	42	16.5	12	6	24.2	11	30	1	3.8	M5X0.8	7.22	4.46	0.11
U 005	SU 005	25	47	17.5	12	6	25	12	36	1	4	M5X0.8	7.74	4.96	0.15
U 006	SU 006	30	55	18.5	13	6.5	26	12	42	1.5	4	M5X0.8	10.18	6.91	0.21

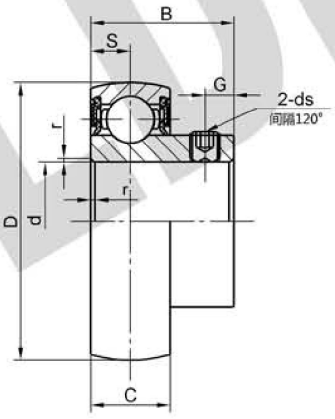

K000 SK000 Series

Unit No.		Shaft d(mm)	Dimensions(mm)							Basic Load Rating kgf		Weight (kg)
Chrome Steel	Stainless Steel		D	B	C	S	r	G	ds	Dynamic Cr	Static Cor	
K 000	SK 000	10	26	14	8	4	0.5	3	M3x0.35	3.50	1.73	0.03
K 001	SK 001	12	28	14.5	8	4	0.5	3	M3x0.35	3.93	2.39	0.04
K 002	SK 002	15	32	16.5	9	4.5	0.5	3.5	M4X0.5	4.30	2.51	0.05
K 003	SK 003	17	35	17.5	10	5	0.5	3.5	M4X0.5	4.62	2.79	0.07
K 004	SK 004	20	42	21	12	6	1	4	M5X0.5	7.22	4.46	0.11
K 005	SK 005	25	47	22.5	12	6	1	4.5	M5X0.5	7.74	4.96	0.15
K 006	SK 006	30	55	24.5	13	6.5	1.5	5	M5X0.5	10.18	6.91	0.21