FAG

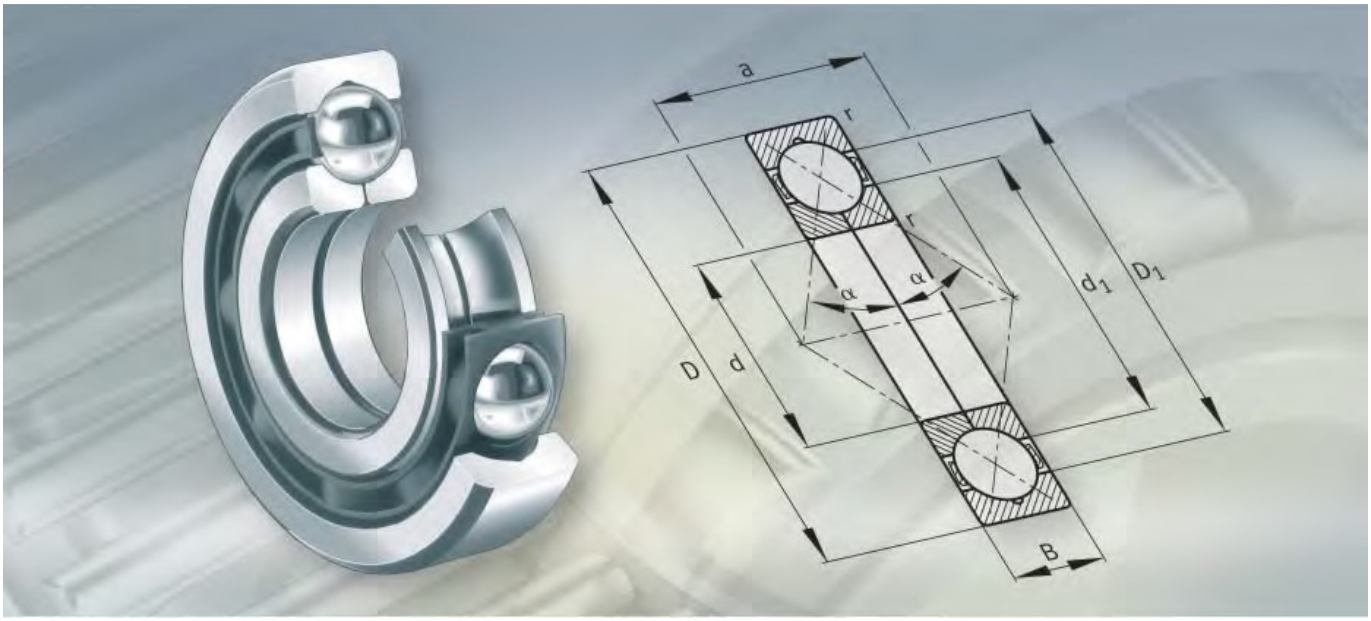

Four point contact bearings

Four point contact bearings

Without retaining slots

QJ2, QJ3

With retaining slots

QJ2..-N2, QJ3..-N2

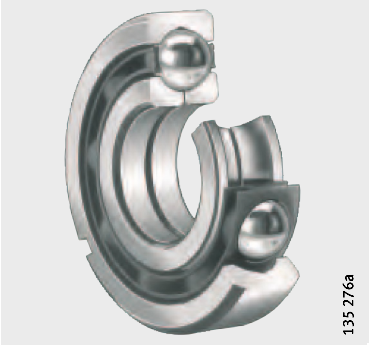

Four point contact bearings

Features

Four point contact bearings are single row angular contact ball bearings and therefore require significantly less space in an axial direction than double row designs.

The bearings comprise solid outer rings, split inner rings and ball and cage assemblies with brass or polyamide cages. The two-piece inner rings allow a large complement of balls to be accommodated. The inner ring halves are matched to the particular bearing and must not be interchanged with those of other bearings of the same size. The outer ring with the ball and cage assembly can be mounted separately from the two inner ring halves.

Axial load capacity in both directions

Due to the design of the rolling element raceways with their high raceway shoulders, the contact angle of 35° and the large number of rolling elements, four point contact bearings have a high load carrying capacity. They can support high axial forces in both directions as well as small radial loads.

With or without retaining slots in the outer ring

Single row four point contact bearings capable of supporting axial loads in both directions are often combined with a radial bearing and used as an axial bearing with radial clearance in a housing. For quick and secure location, larger four point contact bearings therefore have two retaining slots in the outer ring offset by 180°. These bearings have the suffix N2.

Compensation of angular misalignments

The possible skewing of the inner rings in relation to the outer ring depends on the bearing load, the operating clearance and the bearing size and is very small. Four point contact bearings are not therefore suitable for the compensation of angular misalignments in housing bores or due to shaft deflections.

Skewing of the bearing rings increases the running noise, places increased strain on the cages and has a harmful influence on the operating life of the bearings.

Sealing

Four point contact bearings are not sealed.

Lubrication

They are not greased and can be lubricated with grease or oil.

Four point contact bearings

Operating temperature

Bearings with solid brass cages can be used at operating temperatures from –30 °C to +150 °C.

Bearings with an outside diameter of more than 240 mm are dimensionally stable up to +200 °C.

Bearings with cages made from glass fibre reinforced polyamide are suitable for operating temperatures up to +120 °C.

Cages

Standard cages for four point contact bearings, see table.

Four point contact bearings with brass cages have the suffix MPA. These window cages are guided on the outer ring.

Cages made from glass fibre reinforced polyamide are indicated by the suffix TVP.

Check the chemical resistance of polyamide to synthetic greases and lubricants with EP additives.

Aged oil and additives in the oil can impair the operating life of plastic cages at high temperatures.

The oil change intervals must be observed.

Cage and bore code

Series	Solid brass cage[1)]	Polyamide window cage[1)]
	Bore code	
QJ2	up to 07, 10, 13, from 16	08, 09, 11, 12, 14, 15
QJ3	04, from 10	05 to 09

1) Other cage designs available by agreement. In such cages, suitability for high speeds and temperatures as well as the basic load ratings may differ from the values for bearings with standard cages.

Suffixes

Suffixes for available designs: see table.

Available designs

Suffix	Description	Design
C3	Axial internal clearance larger than normal	Special design, available by agreement
MPA	Solid brass cage	Standard
TVP	Window cage made from glass fibre reinforced polyamide 66	
N2	Two retaining slots in outer ring	Standard for larger bearings

Design and safety guidelines

Equivalent dynamic bearing load

Load ratio and equivalent dynamic load

For bearings under dynamic loading, the following applies:

Load ratio	Equivalent dynamic bearing load
$\frac{F_a}{F_r} \leq 0{,}95$	$P = F_r + 0{,}66 \cdot F_a$
$\frac{F_a}{F_r} > 0{,}95$	$P = 0{,}6 \cdot F_r + 1{,}07 \cdot F_a$

P N
Equivalent dynamic bearing load for combined load

F_a N
Axial dynamic bearing load

F_r N
Radial dynamic bearing load.

Equivalent static bearing load

For bearings under static loading, the following applies:

$$P_0 = F_{0r} + 0{,}58 \cdot F_{0a}$$

P_0 N
Equivalent static bearing load for combined load

F_{0a} N
Axial static bearing load

F_{0r} N
Radial static bearing load.

Minimum axial load

In order to ensure low friction in the bearing, especially at high speeds, a minimum axial load is required. In order to prevent an excessive increase in friction, the axial force should be sufficiently high that the rolling bearings are in contact with the inner and outer ring raceway at only one point. This is ensured if $F_a \geqq 1{,}2 \cdot F_r$.

Application as axial bearings only

If four point contact bearings are to be used as axial bearings only, the outer ring must have a large radial clearance in the housing. As a result, the bearings are not subjected to radial load.

Speeds

High speeds can be achieved if four point contact ball bearings are subjected to purely axial load.

ISO 15 312 does not give thermal reference speeds for these bearings.

The dimension tables therefore only state the limiting speeds n_G. These values are for oil lubrication and must not be exceeded. If higher speeds are required, please contact us.

Design of bearing arrangements

Shaft and housing tolerances

Recommended shaft tolerances for radial bearings with cylindrical bore, see tables, page 150.

Recommended housing tolerances for radial bearings, see table, page 152.

Mounting dimensions

The dimension tables give the maximum dimension of the radius r_a and the diameters of the abutment shoulders D_a and d_a.

Accuracy

The main dimensions of the bearings conform to DIN 628-4.

The dimensional and geometrical tolerances of the bearings correspond to tolerance class PN to DIN 620-2.

Axial internal clearance

The axial internal clearance corresponds to internal clearance group CN to DIN 628-4.

Axial internal clearance

Bore		Axial internal clearance							
d mm		C2 µm		CN µm		C3 µm		C4 µm	
over	incl.	min.	max.	min.	max.	min.	max.	min.	max.
18	40	30	70	60	110	100	150	140	190
40	60	40	90	80	130	120	170	160	210
60	80	50	100	90	140	130	180	170	220
80	100	60	120	100	160	140	200	180	240
100	140	70	140	120	180	160	220	200	260
140	180	80	160	140	200	180	240	220	280
180	220	100	180	160	220	200	260	240	300
220	260	120	200	180	240	220	300	280	360

Four point contact bearings

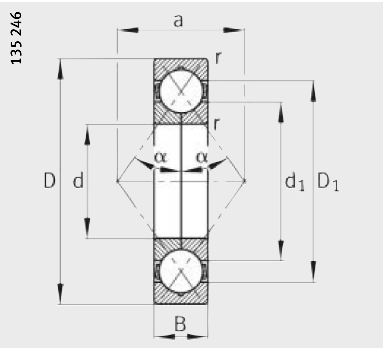

Without retaining slots
$\alpha = 35°$

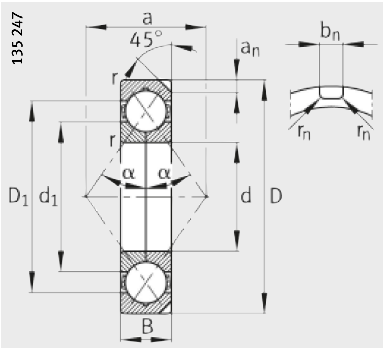

N2, two retaining slots
$\alpha = 35°$

Dimension table · Dimensions in mm

Designation	Mass	Dimensions							
	m	d	D	B	r	D_1	d_1	a	a_n
	≈kg				min.	≈	≈	≈	
QJ304-MPA	0,184	**20**	52	15	1,1	41,4	30,6	26	–
QJ205-MPA	0,171	**25**	52	15	1	43,1	34,2	27	–
QJ305-TVP	0,256	**25**	62	17	1,1	49,5	37,5	31	–
QJ206-MPA	0,254	**30**	62	16	1	50,7	40,3	32	–
QJ306-TVP	0,379	**30**	72	19	1,1	58	43,9	36	–
QJ207-MPA	0,359	**35**	72	17	1,1	59,1	47,9	38	–
QJ307-TVP	0,516	**35**	80	21	1,5	64,8	50,7	41	–
QJ208-TVP	0,399	**40**	80	18	1,1	66,8	53,6	42	–
QJ308-TVP	0,695	**40**	90	23	1,5	73,4	56,6	46	–
QJ209-TVP	0,467	**45**	85	19	1,1	72	58,4	45	–
QJ309-TVP	0,934	**45**	100	25	1,5	81,7	63,6	51	–
QJ210-MPA	0,609	**50**	90	20	1,1	76,4	63,6	49	–
QJ310-MPA	1,39	**50**	110	27	2	89,6	70,8	56	–
QJ211-TVP	0,697	**55**	100	21	1,5	84,7	70,6	54	–
QJ311-MPA	1,76	**55**	120	29	2	97,8	77,5	61	–
QJ212-TVP	0,889	**60**	110	22	1,5	93	77,3	60	–
QJ312-MPA	2,2	**60**	130	31	2,1	106,9	84,2	67	–
QJ213-MPA	1,27	**65**	120	23	1,5	101,5	84,1	65	–
QJ313-MPA	2,71	**65**	140	33	2,1	114,4	90,9	72	–
QJ214-TVP	1,22	**70**	125	24	1,5	106,3	89	68	–
QJ314-MPA	3,29	**70**	150	35	2,1	123,6	97,6	77	–
QJ215-TVP	1,34	**75**	130	25	1,5	111,5	94	72	–
QJ315-N2-MPA	3,95	**75**	160	37	2,1	131	104,3	82	10,1
QJ216-MPA	1,84	**80**	140	26	2	119,6	100,9	77	–
QJ316-N2-MPA	4,65	**80**	170	39	2,1	140,8	110,6	88	10,1
QJ217-MPA	2,3	**85**	150	28	2	128,6	107,5	82	–
QJ317-N2-MPA	5,54	**85**	180	41	3	148,6	117,8	93	11,7
QJ218-N2-MPA	2,8	**90**	160	30	2	136,1	114,2	88	8,1
QJ318-N2-MPA	6,44	**90**	190	43	3	157,1	124,5	98	11,7
QJ219-N2-MPA	3,41	**95**	170	32	2,1	144,4	121	93	8,1
QJ319-N2-MPA	7,45	**95**	200	45	3	165,4	131,2	103	11,7
QJ220-N2-MPA	4,1	**100**	180	34	2,1	153,6	127,7	98	10,1
QJ320-N2-MPA	9,04	**100**	215	47	3	176,6	138,9	110	11,7
QJ221-N2-MPA	4,81	**105**	190	36	2,1	161,6	134,7	103	10,1

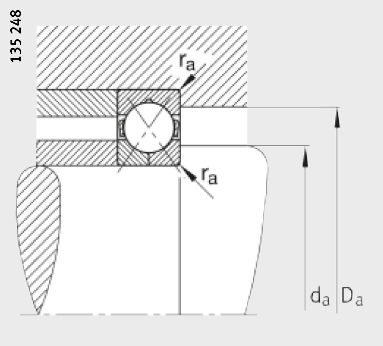

Mounting dimensions

		Mounting dimensions			Basic load ratings		Fatigue limit load	Limiting speed
b_n	r_n	d_a min.	D_a max.	r_a max.	dyn. C_r N	stat. C_{0r} N	C_{ur} N	n_G min^{-1}
–	–	27	45	1	30 000	19 600	990	28 000
–	–	31	46	1	25 500	18 600	950	26 000
–	–	32	55	1	44 000	31 500	1 590	14 000
–	–	36	56	1	36 500	27 500	1 410	20 000
–	–	37	65	1	58 500	43 000	2 170	11 000
–	–	42	65	1	44 000	35 500	1 800	18 000
–	–	44	71	1,5	62 000	51 000	2 550	9 500
–	–	47	73	1	56 000	46 500	2 380	9 500
–	–	49	81	1,5	86 500	68 000	3 500	8 500
–	–	52	78	1	64 000	57 000	2 900	8 500
–	–	54	91	1,5	102 000	83 000	4 550	7 500
–	–	57	83	1	61 000	56 000	2 900	13 000
–	–	61	99	2	110 000	91 500	4 950	11 000
–	–	64	91	1,5	80 000	76 500	3 900	7 000
–	–	66	109	2	127 000	108 000	5 900	10 000
–	–	69	101	1,5	96 500	93 000	4 800	6 300
–	–	72	118	2,1	146 000	127 000	6 700	9 000
–	–	74	111	1,5	104 000	104 000	3 950	9 500
–	–	77	128	2,1	163 000	146 000	7 900	8 500
–	–	79	116	1,5	118 000	122 000	6 800	5 600
–	–	82	138	2,1	183 000	166 000	8 600	8 000
–	–	84	121	1,5	125 000	129 000	6 800	5 300
8,5	2	87	148	2,1	212 000	204 000	10 500	7 000
–	–	91	129	2	132 000	137 000	7 100	8 000
8,5	2	92	158	2,1	224 000	220 000	10 800	7 000
–	–	96	139	2	153 000	160 000	8 100	7 000
10,5	2	99	166	2,5	245 000	255 000	11 700	6 300
6,5	1	101	149	2	176 000	186 000	8 800	7 000
10,5	2	104	176	2,5	265 000	285 000	12 900	6 000
6,5	1	107	158	2,1	200 000	212 000	10 100	6 300
10,5	2	109	186	2,5	285 000	310 000	14 100	6 000
8,5	2	112	168	2,1	224 000	240 000	11 200	6 000
10,5	2	114	201	2,5	325 000	365 000	16 300	5 600
8,5	2	117	178	2,1	232 000	260 000	11 600	6 000

Four point contact bearings

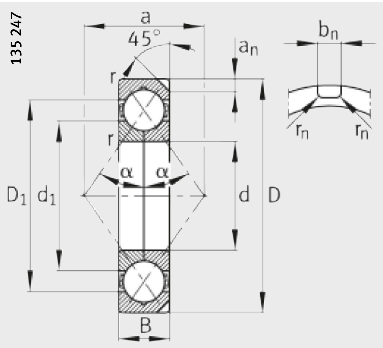

N2, two retaining slots
α = 35°

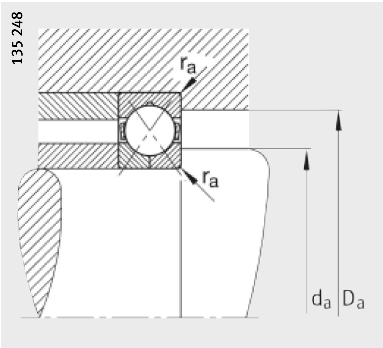

Mounting dimensions

Dimension table (continued) · Dimensions in mm

Designation	Mass	Dimensions							
	m	d	D	B	r	D_1	d_1	a	a_n
	≈kg				min.	≈	≈	≈	
QJ222-N2-MPA	5,66	**110**	200	38	2,1	169,8	141,6	109	10,1
QJ322-N2-MPA	12,2	**110**	240	50	3	195,5	156,4	123	11,7
QJ224-N2-MPA	6,74	**120**	215	40	2,1	183,6	152,8	117	11,7
QJ324-N2-MPA	15,6	**120**	260	55	3	210,6	169,8	133	11,7
QJ226-N2-MPA	7,66	**130**	230	40	3	195	165,4	127	11,7
QJ326-N2-MPA	19,2	**130**	280	58	4	228	184	144	12,7
QJ228-N2-MPA	9,69	**140**	250	42	3	210,5	180	137	11,7
QJ328-N2-MPA	23,2	**140**	300	62	4	243	197	154	12,7
QJ230-N2-MPA	12,2	**150**	270	45	3	226,7	193,7	147	11,7
QJ330-N2-MPA	28	**150**	320	65	4	261	211,3	165	12,7
QJ232-N2-MPA	15,3	**160**	290	48	3	240	210	158	12,7
QJ332-N2-MPA	32,8	**160**	340	68	4	279,9	222,7	175	12,7
QJ234-N2-MPA	18,9	**170**	310	52	4	260,5	221,4	168	12,7
QJ334-N2-MPA	38,4	**170**	360	72	4	292	238	186	12,7
QJ236-N2-MPA	19,6	**180**	320	52	4	269	231	175	12,7
QJ336-N2-MPA	44,9	**180**	380	75	4	311	249,1	196	12,7
QJ238-N2-MPA	23,8	**190**	340	55	4	286,3	245,8	186	12,7
QJ338-N2-MPA	52,1	**190**	400	78	5	327	262,5	207	12,7
QJ240-N2-MPA	28	**200**	360	58	4	302	258,6	196	12,7
QJ244-N2-MPA	38,6	**220**	400	65	4	336	284,6	217	12,7
QJ344-N2-MPA	77,1	**220**	460	88	5	378	302	238	15
QJ248-N2-MPA	53,1	**240**	440	72	4	367	312,5	238	15
QJ348-N2-MPA	98,2	**240**	500	95	5	410	330,7	259	15