Catalogue 41

MÄDLER®

GEGRÜNDET 1882

135 years of experience - power transmission for your success

www.maedler.de

...we keep things moving







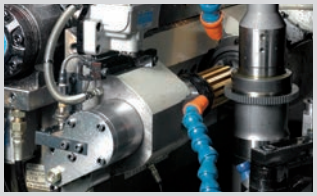
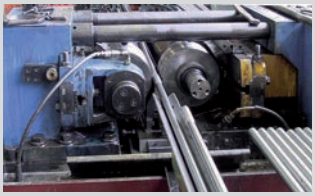
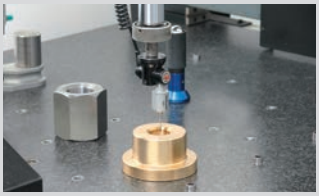

Made in Germany - the factory near Hamburg

Dear Customers,

in many countries around the world, we have responsible distributors to provide you the best service. These partners can be found at www.maedler.de in the section Branch Offices.

For countries without a distributor, please contact:

MAEDLER GmbH
Export-Department
Traenkestrasse 6 - 8
D-70597 Stuttgart
Germany

Phone +49 711 720 95 885
Fax +49 711 720 95 33
export@maedler.de



MÄDLER® branches worldwide

Made in Germany - our factory in Stuttgart










Edition no. 2 03 / 2018

MÄDLER® Catalogue 41

More than 25,000 Parts! To 95% immediately available!

Contents in alphabetical order page 6

Illustration index page 9



Roller chains Page 35



Sprockets Page 60
Chain tensioners Page 109



Round-Link Steel Chains and Chain Wheels Page 119



Idlers Page 122

Travel wheel systems Page 124



Timing Belt Drives Page 128



V-belt pulleys Page 183
V-belts Page 192



Spur gears, Page 194
Internal gears Page 249

Ratchet wheels, ratchet braces Page 250



Gear racks Page 255



Bevel gears Page 267



Worm gear sets Page 284



Trapezoidal thread spindles and nuts Page 305

Ball spindle drives Page 317



Splined shafts and splined hubs Page 327



Locking assemblies and shrink disks Page 330



Couplings, sliding hubs Page 364



Universal joints Page 403



Bearings, Roller bearings Page 416



Plain bearing bushes and raw material of sintered bronze Page 445
Drill bushes..... Page 451



Adjusting rings Page 452

Clamp collars Page 454



Rod ends and spherical bearings Page 458



Clevis joints Page 472
Angle joints Page 475



Shaft steel and linear bearings .... Page 476



Threaded bars and nuts Page 510



Spring plungers Page 524
indexing plungers Page 529



Cup rollers Page 508



Knobs, grips and levers Page 529



Hand wheels Page 565



Lifting pins and socket pins Page 571

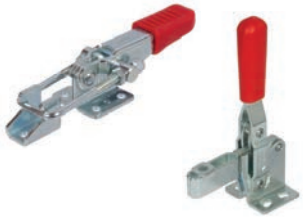

Quick clamps and latch clamps Page 572



Assortment boxes Page 576

Feather keys, key steel Page 578

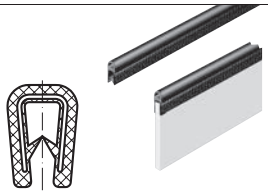

Edge trims, trim seals Page 580



Oilers and sight glasses Page 582



Precision levelling adjusters Page 588

Levelling pads and articulated feet Page 596



Spherical washers and conical seats Page 523

Grub screws and thrust pads Page 595



Rubber-metal buffers Page 600

Bushes PHO Page 606



Profile dampers Page 607

Shock absorbers Page 610



Pneumatic elements Page 613



Gearboxes Page 654



Motors and geared motors Page 654



Telescopic slides Page 769



Adhesives and sealants Page 811

Maintenance and repair sprays Page 815

General technical information, page 816

Special parts / Custom-made parts

Are you looking for a part that's not in the catalogue?
We can also supply parts other than those listed.
Apart from this we can also produce special parts
according to drawing or customer specification. Please contact us.

Contents in Alphabetical Order

A

***ACCURIDE*® Slides / Overview** ... **769**
Aerosols (Maintenance Sprays) ... 815
Actuator Systems ... 758
Adjustable Clamp Nuts ... 555
Adjustable Clamping Levers ... 550
Adjusting Rings ... 452
Air Preparation Equipment ... 634
Aluminium Spray ... 751
Angle Joints ... 430
Angular Drives (Plastic Bevel gears on Plate) ... 607
Anti-Vibration Elements ... 600
Arch Handles ... 560
Articulated Feet ... 597
Assembly Plug for Ball Cups ... 508
Assortment Boxes ... 576

B

Ball Bearings ... 436
Ball Flange Bearings ... 427
Ball Head Precision Adjusters ... 594
Ball Joints ... 405, 413
Ball Knobs ... 545
Ball Pillow Block Bearings ... 426
Ballscrew Spindle Drives ... 317
Ball Valves (manual) ... 644
Ball-Ended Thrust Screws ... 524
Bar Material Sintered Bronze ... 446
Bellows ... 415, 764
Bevel Gearboxes / Overview ... **654**
Bevel Gears / Overview ... **267**
Blow Guns ... 649
Bolts for T-Slots ... 518
Bolts with Cotter Pin Hole DIN 1434 Assortment Box ... 576
Bonding Products Loctite® ... 812
Bore-Reducing Bushes ... 407
Box Couplings ... 367
Bracket Hinge Mountings for Pneumatic Cylinders ... 622
Bushes ... 445

C

Cabinet "U" Handles ... 558
Cam-Action Indexing Plunger ... 532
Cap Bearings ... 420
Capacitors ... 722
Cardan Joints / Overview ... **403**
Chain Breakers for Roller Chains ... 58
Chain Couplings ... 384
Chain Lubricating Spray ... 815
Chain Puller for Roller Chains ... 58
Chain Riders ... 116
Chain Tensioners ... 111
Chain Tensioning Wheels with Bearing ... 109, 115
Chains (Roller Chains) ... 35
Chains (Round-Link Steel Chains DIN 766A) ... 119
Clamp Collars for Round Shafts (Slotted and Two-Part) ... 454
Clamp Collars for Splined Shafts ... 329
Clamp Collars for Threaded Bars ... 457
Clamp Mounts for Shock Absorbers ... 611
Clamp Nuts ... 555
Clamping Bolts for Quick Clamp® ... 573
Clamping Bushes / Overview ... **330**
Clamping Levers ... 550
Clamping Sets / Overview ... **330**
Clevis Joints ... 472
Clevises for Pneumatic Cylinders ... 623
Clevises ... 472
Compact Cylinders ... 616
Compressed Air Filters ... 635
Conical Seats DIN 6319 ... 523
Connecting Links for Roller Chains ... 37
Connecting Links for Round-Link Steel Chains ... 119
Connecting Shafts ... 766
Continuously Variable Geared Motors MUN/I ... 753
Control Knobs ... 537
Control Levers ... 557
Control Units (Motor controllers) ... 696
Corrosion Protection Spray ... 815
Couplings / Overview ... **364**
Cranks ... 563
Cup Rollers ... 508
Cylinders (Pneumatic) ... 615, 616, 618
Cylindrical Bushes ... 447
Cylindrical Handles ... 547
Cylindrical Roller Bearings ... 441

D

Disconnection Tool (for pneumatic tubes) ... 647
Drill Bushes ... 451
Drip-Feed Oilers ... 583
Driven Idlers, (Travel wheel systems) ... 124

E

Eccentric Clamping Levers ... 554
Edge Trims ... 580
Electric Motors / Overview ... **655**
Electronic Drip Feed Oiler ... 584
ES-Bolts for Clevises ... 473
Exhaust Filters (Pneumatic) ... 645
Extension Nuts ... 512
Extension slides / Overview ... **769**

F

Fast Connectors (Pneumatic Fittings) ... 638
Feather Keys Assortment Box ... 577
Feather Keys ... 578
Filter / Regulators (Pneumatic) ... 636
Fixing Plates for Timing Belts ... 171
Flange Bearings ... 422
Flange Nuts Trapezoidal Thread ... 314, 316
Flange Shaft Blocks ... 476
Flanged Drill Bushes ... 451
Flanges for Timing Belt Pulleys ... 170
Flat Gearboxes ... 662
Folding Handles ... 561
Foot Plate Mountings for Pneumatic Cylinders ... 620, 625
Frequency Inverters ... 698
Front Flanges for Pneumatic Cylinders ... 620, 626

G

Gear Lever Handles ... 546
Gear Racks / Overview ... **255**
Gearboxes, Geared Motors / Overview ... **654**
Geared Motors RBM/I for Travel-Wheel System ... 126
Gears / Overview ... **194**
General Basics for Bevel Gears ... 268
General Basics for Roller Chains ... 35
General Basics for Spur Gears ... 196
General Basics for Timing Belt Drives ... 129
General Basics for Trapezoidal-Thread Spindles ... 305
General Basics for Universal Joints ... 373 - 374
General Basics for Worm Gears ... 294
General Technical Notes ... 816
Grips ... 538
Grub Screws DIN 6332 with Thrust Point ... 595
Guide Rails for Roller Chains ... 57

H
Hand Cranks ... 563
Hand Wheels ... 565
Handles ... 547
Hasp Wheels ... 121
Heavy-Duty Bushes PHO ... 606
Helical Gear Boxes BT/I ... 657
Helical Geared Motors / Overview ... **655**
Hexagonal Nuts, Metric Thread ... 511
Hollow Worms ... 287
Hook Spanners DIN 1810 Form A ... 517
Horizontal Clamps ... 574
Hose Coils ... 650
Hose Tailpieces ... 650

I
Idlers ... 109, 122
Igus® / igubal® ... 418, 461
Illustration index ... **9**
Imprint ... **833**
Indexing Plungers ... 532
Instant Adhesives Loctite® ... 813
Internal gears ... 249

J
Jacks (Actuators) ... 758

K
Key Steel ... 578
KL-Retainers, Assortment Box ... 575, 576
Knurled Knobs and Screws ... 543
Knurled Nuts and Screws ... 519

L
Latch Clamps ... 572
Levelling Feets ... 598
Levelling Pads ... 596
Lifting Pins ... 571
Limit Switch (Motor Emergency Stop) ... 398
Linear Bearings and Units / Overview ... **476**
Linear Drives (lifting devices) ... 758
Linear Slide Bearings ... 492
Linear Technology / Overview ... **476**
Locking Assemblies / Locking Devices / Overview ... **330**
Locknuts ... 515
Lockwashers ... 515
Loctite® ... 811
Lubricators Perma® ... 582

M
Machine Mounts ... 599
Magnetic Switches for Pneumatic Cylinders ... 627
Maintenance Instructions ... **823**
Manifold ... 642
Membrane Couplings ... 379
Metal Bellow Couplings ... 377
Metal-Rubber-Buffers ... 600
Micro-Fog Oilers ... 636
Miniature Ball Screw Spindle Drives ... 321
Miniature Profile-Rail Guides ... 505
Miniature Shock Absorbers ... 610
Miniature Slide Units ... 506
Motor Controllers ... 697
Motor Emergency Stop (Limit Switch) ... 398
Motor-Tensioning Rail Sets SPS ... 695
Mounting Blocks for Shock Absorbers ... 611
Mounting Elements for Magnetic Switches ... 625
Mounting Elements Quikclamp ... 637
Mounting Options For Driving Wheels ... **817**
Multi-Function Spray WD-40® ... 815

N
Non-Return Valves ... 647
Nuts / Bolts for T-Slots ... 518
Nuts, Metric Thread ... 511
Nuts, Trapezoidal Thread ... 313

O
Oiler ... 582
Oil-Level Sight Glasses ... 585
Operating Capacitors ... 722
Operation and Maintenance Instructions ... **823**

P
Palm Grips ... 538
Parallel Keys Assortment Box ... 577
Parallel Keys ... 578
Pillow Block Bearing ... 420, 426
Plain Bearing Bushes ... 445
Planetary Small Geared Motors PE ... 709
Pneufit® Quick Connectors ... 638
Pneumatic Elements / Overview ... **613**
Polyamide Tubes ... 648
Polyurethane Hoses ... 648
Precision Adjusters ... 588
Precision Housings for Linear Bearings / Overview ... **476**
Precision Levelling Adjusters ... 588
Precision Rail-Guide Sets ... 504
Precision Worm Gear Sets ... 295
Pressure Gauges ... 637
Pressure Regulators ... 635
Pressure Relief Valves ... 636
Profile Dampers ... 607
Profile Rail Guides ... 505
Profiled Track Rollers and Bolts ... 502
PTFE Spray ... 815

Q
Quadro Linear Bearing Units ... 476
Quality Management Certificate ... **34**
Quick Clamps ... 573
Quick Exhaust Valves ... 646

R
Radial Shaft Seals ... 443
Rail-Guide Sets ... 504
Ratchet Braces and Ratchet Wheels ... 250
Raw Material Sintered Bronze ... 446
Ready to Install Actuator Systems ... 758
Rear Clevis Mountings for Pneumatic Cylinders ... 621
Rear Eye Mountings ... 562 - 563
Rear Flanges for Pneumatic Cylinders ... 620
Rectangular Flanges for Shock Absorbers ... 611
Retaining Rings DIN 471 / DIN 472 ... 514
Retractable Handles ... 547
Revolving Ball Knobs ... 546
Reworking of Spindles ... 325, 435
Rigid Couplings ... 367
ROBA® Sliding Hubs ... 402
Rod Ends / Overview ... **458**
Rod Ends for Pneumatic Cylinders ... 624
Roller Bearings / Overview ... **416**
Roller Chains / Description ... **35**
Roller Chains with Bent Attachments ... 50
Roller chains with Straight Attachments ... 46
Roller Chains ... 37

Round Gear Racks ... 262
Round-Line Cylinders ... 618
Round-Link Steel Chains DIN 766 A ... 119
Rubber-Metal Bump Stops ... 600

S
Screw Jacks ... 758
Sealants and Sealant Removers Loctite® ... 814
Seals for Ball Bearings and Shafts ... 443
Set Collars ... 452
Sealing Caps for Angle Joints ... 475
Shaft Blocks ... 476
Shaft Collars ... 452
Shaft Nuts ... 515
Shaft Steel with Shaft Support ... 481
Shaft Steel ... 478
Shaft-Mounted Flat Gearboxes BOC/I ... 662
Shaft to Hub Connections / Overview ... **330**
Shock Absorbers (Hydraulic Dampers) ... 610
Shrink Disks ... 356
Shut-off Valve (manual) ... 637
Silencers (pneumatic) ... 640, 645
Silver Steel ... 477
Single Row Roller Bearings ... 436
Sintered Bronze Blanks for Plain Bearings ... 446
Sintered Bronze Bushes ... 445
SKF® Rollerbearings / Overview ... **416**
Sliding Hubs / Overview ... **365**
Slip Clutches ... 394
Slotted Nuts ... 515
SL-Retainers, Assortment Box ... 575, 576
Small Geared Motors / Overview ... **655**
Small Worm Geared Motors / Overview ... **655**
Socket for Solenoid Valves ... 633
Socket Pins with Spring-Loaded Balls ... 571
Solenoid Shut-Off Valve (manual) ... 637
Solenoid Valves ... 629
Spacers for Precision Levelling Adjusters ... 594
SPANNBOX® / SPANNBOY® ... 111
Spare Chain Link for Round-Link Steel Chains DIN 766 A ... 119
Spare Solenoids for Solenoid Valves ... 633
Speed Controllers for DC drives ... 696
Spherical Bearings DIN 12240-1 (DIN 648) ... 469
Spherical Roller Bearings ... 441
Spherical Washers DIN 6319 ... 523
Spiders for Elastic Couplings ... 391
Spindles, Ball Drives ... 317
Spindles, Trapezoidal Threads / Overview ... **305**
Splined Hubs ... 328
Splined Shafts for Timing Belts ... 166
Splined Shafts ... 327
Sprays (Aerosols) ... 815
Spring Plungers ... 524
Sprockets for Roller Chains / Overview ... **60**
Sprockets for Round-Link Steel Chains ... 121
Spur Gear Shafts ... 247
Spur Gears / Overview ... **194**
Stainless Steel Spray ... 815
Standard and Safety Quick-Release Couplings ... 651
Standard Cylinders (Pneumatic) ... 615
Standard Fog Oiler ... 636
Standard Motors (Three-Phase) ... 692
Standard Parts for Operating / Overview ... **529**
Star Grips and Star Grip Screws ... 538
Stauffer Grease Boxes ... 586
Support Units for Spindle Drives ... 322, 432
Swing Bolts ... 522

T
Tandem Linear Bearing Units ... 476
Taper Bushes - Instructions ... 824
Taper Bushes ... 360
Tapered Rollerbearings ... 442
Telescopic Slides / Overview ... **769**
Telescopic Universal-Joint Shafts ... 407, 413
Tensioning Elements for Chains ... 116
Tensioning Elements for Belts ... 182, 191
Tensioning Rollers for Timing Belt Drives ... 182
The Company ... **27**
Thread Locking Products Loctite® ... 811
Threaded Bars, Metric (DIN 975 / DIN 976) ... 510
Threaded Spindles and Nuts, Trapezoidal Threads ... 305
Throttle-Type Non-Return Valves ... 646
Thrust Pads ... 595
Thrust Screws ... 524
Timing-Belt Drives / Overview ... **128**
Tolerance Rings for Cup Rollers ... 509
Toothed Couplings ... 380
Trapezoidal Thread Spindles and Nuts / Overview ... **305**
Travel Wheel Systems RB/I ... 124
Triangular Knobs and Screws ... 484
Tri-Ball Handles ... 542
Tube Cutters ... 589
Tubular Handles ... 647
Turnbuckle Nuts ... 513
Turret Levers ... 564

U
Universal Joints / Overview ... **403**
Universal Joint Shafts ... 407, 413

V
Variable Geared Motors MUN/I ... 753
V-Belt Pulleys for Taper Bushes ... 183
V-Belt Pulleys Made From Light Alloy ... 188
V-Belt Tensioners ... 191
V-Belts ... 192
Vertical Clamps ... 573

W
Washers and Pins Assortment Box ... 577
Washers DIN 6340 ... 513
WD-40® (Multi-Function Spray) ... 815
Welding Hubs for Taper Bushes ... 362
Wing Nuts and Screws ... 544
Worm Gear Screw Jacks NP/I ... 761
Worm Gear Boxes / Overview ... **654**
Worm Geared Motors / Overview ... **655**
Worm Helical Geared Motors / Overview ... **655**
Worms and Worm Gears/ Overview ... **284**

Z
Zinc Repair Spray ... 815

Roller Chain Drives DIN ISO 606 (ex DIN 8187)


Single-Strand Roller Chains according to DIN
Page 37


Connecting Links for Single-Strand Roller Chains
Page 37


Single-Strand Roller Chains similar to DIN, with straight plates
Page 38


Single-Strand Roller Chains similar to DIN, maintenance free
Page 39


Single-Strand Roller Chains similar to DIN, nickel plated
Page 40


Roller chain KE, plastic with stainless steel
Page 41


Single-Roller Chain similar to DIN, from Stainless Steel
Page 42


Double-Strand Roller Chains according to DIN
Page 43


Connecting Links for Double-Strand Roller Chain
Page 43


Double-Strand Roller Chains similar to DIN, with straight plates
Page 44


Triple-Strand Roller Chains according to DIN
Page 45


Connecting Links for Triple-Strand Roller Chain
Page 45


Roller Chains with One-Hole Straight Attachments, 2 x p, 4 x p and 6 x p
Page 46


Spring Clip Connecting Links with One-Hole Straight Attachments
Page 46


Roller Chains with Two-Hole Straight Attachments, 2 x p, 4 x p and 6 x p
Page 48


Spring Clip Connecting Links with Two-Hole Straight Attachments
Page 48


Roller Chains with One-Hole Bent Attachments, 2 x p, 4 x p and 6 x p
Page 50


Spring Clip Connecting Links with One-Hole Bent Attachments
Page 50


Roller Chains with Two-Hole Bent Attachments, 2 x p, 4 x p and 6 x p
Page 52


Spring Clip Connecting Links with Two-Hole Bent Attachments
Page 52


Roller Chains with Two-Hole Straight Attachments, 2 x p, Stainless Steel
Page 54


Spring Clip Connecting Links with Two-Hole Straight Attachments, Stainless Steel
Page 54


Roller Chains with Two-Hole Bent Attachments, 2 x p, Stainless Steel
Page 55


Spring Clip Connecting Links with Two-Hole Bent Attachments, Stainless Steel
Page 55


Roller Chains - Customized Products to Your Requirements
Page 56


Plastic Guide Rails for Roller Chains
Page 57


Chain Breakers
Page 58


Chain Pullers
Page 58


Chain Lubricating Spray
Page 58


Sprockets KRK Made from Polyacetal resin with One-Sided Hub, Die Cast
Page 62


Sprockets KRR Made from Stainless Steel with One-Sided Hub
Page 63


Sprockets KRF Made from Steel Ready-to-Install
Page 64


Sprockets KRT with One-Sided Hub for Taper Bushes
Page 74


Taper Bushes
Page 76


Welding Hubs for Taper Bushes
Page 78


Sprockets KRS/KRG with One-Sided Hub
Page 79


Sprockets KRL without Hub
Page 80


Double-Strand Sprockets ZRE and ZREG for 2 Single-Strand Roller Chains
Page 91


Double-Strand Sprockets ZRT for Taper Bushes
Page 92


Double-Strand Sprockets ZRS with One-Sided Hub
Page 94

Double-Strand Plate Wheels ZRL without Hub
Page 94

Triple-Strand Sprockets DRT for Taper Bushes
Page 101

Triple-Strand Sprockets DRS with One-Sided Hub
Page 102

Triple-Strand Plate Wheels DRL without Hub
Page 102

Chain Tensioning Wheels KSP with Bearing for Single-Strand Roller Chain
Page 109

Mounting Screws For Wheels KSP
Page 109

Chain Tensioning Wheels KSP-R with Bearing for Single-Strand Roller Chain, Stainless
Page 110

Sprocket Sets for Chain Tensioners, Single stainless
Page 110

Roller Chain Drives DIN ISO 606 (ex DIN 8187) / Round Chains / Crane Wheels / Synchronious Belt Drives


Chain Tensioners SPANN-BOX® Size 0
Page 111


Chain Tensioners SPANN-BOX® Size 1
Page 112


Chain Tensioners SPANN-BOY® TS
Page 113


Chain Tensioners for Single-Strand Roller Chains
Page 114


Chain Tensioners for Double-Strand Roller Chains
Page 114


Chain Tensioners for Triple-Strand Roller Chains
Page 114


Sprocket Sets for Chain Tensioners, Single
Page 115


Sprocket Sets for Chain Tensioners, Double
Page 115


Sprocket Sets for Chain Tensioners, Triple
Page 115


Chain Rider Sets
Page 116


Tensioning Elements in Several Versions
Page 116


Tensioning Elements, stainless
Page 117


Tensioning Elements "Boomerang"
Page 117


Round-Link Steel Chains DIN 766A and Stainless
Page 119


Maillons de secours RN
Page 119


Chain Wheels without Teeth (Chain Rollers)
Page 120


Chain Wheels with Teeth (Hasp Wheels)
Page 121


Idlers 712 AV Made from Grey Cast Iron with One-Sided Flange
Page 122


Idlers Made from Polyamide with One-Sided Flange
Page 122


Idlers Made from Steel (C45) with Two-Sided Flange
Page 123


Travel Wheel Systems RB/I
Page 124


Geared Motors RBM/I for Travel Wheel Systems RB/I
Page 126


T-Timing Belt Pulleys made from Polyacetal
Page 138


T-Timing Belt Pulleys Made From Aluminium
Page 139


T-Timing Belt Pulleys Made From Aluminium
Page 139


AT-Timing Belt Pulleys Made From Aluminium
Page 144


AT-Timing Belt Pulleys Made From Aluminium
Page 144


HTD-Timing Belt Pulleys Made From Aluminium
Page 148


HTD-Timing Belt Pulleys Made From Aluminium
Page 148


HTD-Timing Belt Pulleys Made From Steel, Phosphated
Page 149


HTD-Timing Belt Pulleys for Taper Bushes
Page 150


Taper Bushes
Page 158


Standard Timing Belt Pulleys, Inch Pitch Made From Aluminium
Page 161


Standard Timing Belt Pulleys, Inch Pitch Made From Steel, Phosphated
Page 162


Splined Shafts Profile T
Page 166


Splined Shafts Profile AT
Page 167


Splined Shafts Profile HTD
Page 168


Splined Shafts Inch Pitch
Page 169


Flanges for Timing Belt Pulleys
Page 170


Fixing Plates for Timing Belts
Page 171

Timing Belts Sold by the Meter, TPU
Page 172

Timing Belts Sold by the Meter, Neopren (Rubber)
Page 173

Timing Belts - Welding
Page 174

Timing Belts - Welding
Page 174

T Timing Belts
Page 175

AT Timing Belts
Page 177

HTD Timing Belts
Page 178

Standard Timing Belts Inch Pitch
Page 180

V-Belt Drives / Spur Toothed Gears / Racks / Bevel Gears


Tensioning Rollers
Page 182


Tensioning Elements
Page 182


V-Belt Pulleys for Taper Bushes, 1 Groove
Page 183


V-Belt Pulleys for Taper Bushes, 2 Grooves
Page 184


V-Belt Pulleys for Taper Bushes, 3 Grooves
Page 185


Taper Bushes
Page 186


V-Belt Pulleys Made From Light Alloy with Cast-Iron Hub Reinforcement, 1 Groove
Page 188


V-Belt Pulleys Made From Light Alloy with Cast-Iron Hub Reinforcement, 2 Grooves
Page 189


V-Belt Pulleys Made From Light Alloy with Cast-Iron Hub Reinforcement, 3 Grooves
Page 190


V-Belt Tensioners with Pre-Mounted V-Belt Pulleys
Page 191


Tensioning Rollers
Page 191


Tensioning Elements
Page 191

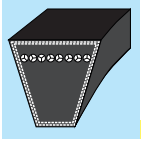
Endless V-Belts
Page 192


Spur Gears made from Polyacetal resin, Straight Teeth
Page 199


Spur Gears made from Polyketone resin, Straight Teeth
Page 199


Spur Gears Made From POM, Milled, Straight Teeth
Page 205


Spur Gears made from POM black, wide, Milled Teeth, Straight Tooth System
Page 211


Spur Gears Made From Plastic with Steel Core, Straight Teeth
Page 213


Spur Gears Made From Brass with OneSided Hub, Milled, Straight Teeth
Page 215


Spur Gears Made From Steel, Milled, Straight Teeth with OneSided Hub
Page 219


Spur Gears Made From Steel, Milled, without Hub, Straight Teeth
Page 222


Spur Gears Made From Steel, inductive Hardened, Straight Teeth
Page 240


Precision Spur Gears Made From Steel, Hardened and Ground, Straigth Teeth
Page 242


Spur Gears Made From Stainless Steel, Milled, Straight Teeth
Page 244


Spur Gear Shafts Made From Steel
Page 247


Spur gears Pitch 5mm and 10 mm
Page 248


Straight Toothed Internal Gears Made From Brass
Page 249


Straight Toothed Internal Gears Made From Steel
Page 249


Ratchet Wheels made from Steel, Unhardened without Hub
Page 250


Ratchet Braces Made From Steel Unhardened, Not Drilled
Page 250


Spur Gears made from Brassl with Onesided Hub, Milled, Helical Teeth
Page 251


Spur Gears made from Steel with Onesided Hub, Milled, Helical Teeth
Page 251


Precision Spur Gears Made From Steel, Case Hardened with Ground Tooth Flanks, Helical Teeth
Page 252


Precision Spur Gears Made From Steel, Case Hardened with Ground Tooth Flanks, Helical Teeth
Page 252


Gear Racks Made from white Plastic, Straight Teeth
Page 256


Gear Racks Made from Plastic Polyketone, Straight Teeth
Page 256


Gear Racks Made from black Plastic, Straight Teeth
Page 256


Gear Racks Made from Brass, Straight Teeth
Page 257


Gear Racks Made from Brass, Helical Teeth left handed
Page 257


Gear Racks Made from Steel, Helical Teeth, left-handed
Page 257

Gear Racks Made From Steel and Stainless Steel, Straight Teeth
Page 258

Precision Gear Racks Made From Steel, Hardened, with Ground Tooth Flanks
Page 260

Round Gear Racks Made From Steel and Stainless Steel
Page 262

Gear Racks Made from Steel, Helical Teeth, Right Hand
Page 264

Bevel Gears Made From Polyacetal resin with Straight Teeth
Page 270

Bevel Gears Made From Polycetone resin with Straight Teeth
Page 270

Angular Drives with Polyacetal Bevel Gears on Metal Plate, 1:1
Page 271

Bevel Gears Made From Zinc Die Cast with Straight Teeth
Page 271

Bevel Gears / Worm Drives / Trapezoidal Spindle Drives / Ball Screw Drives / Locking Assemblies


Bevel Gears Made From Brass with Straight, Milled Teeth
Page 272


Bevel Gears Made From Steel with Straight, Milled Teeth
Page 273


Bevel Gears Made From Stainless Steel with Straight, Milled Teeth
Page 278


Bevel Gears Made From Steel with Spiral Teeth
Page 279


Worm Gears Made From Bronze, Single-Thread, Right Hand
Page 286


Worm Gears Made From Bronze, Single-Thread, Right Hand
Page 286


Hollow Worms, Milled and Whirled, Made From Steel, Single Thread, Right Hand
Page 287


Worm Shafts, Milled and Whirled, Made From Steel, Single Thread, Right Hand
Page 287


Worm Gears Made From Grey Cast Iron, without Spokes, Single-Thread, Right Hand
Page 288


Worm Gears Made From Grey Cast Iron, without Spokes, Single-Thread, Right Hand
Page 288


Worm Gears Made From Bronze, Double-Thread, Right Hand
Page 290


Worm Gears Made From Bronze, Double-Thread, Right Hand
Page 290


Hollow Worms, Milled, Made From Steel, Double Thread, Right Hand
Page 291


Worm Shafts, Whirled, Made From Steel, Double Thread, Right Hand
Page 291


Worm Gears Made From Grey Cast Iron, without Spokes, Double-Thread, Right Hand
Page 292


Worm Gears Made From Grey Cast Iron, without Spokes, Double-Thread, Right Hand
Page 292


Precision Worm Gears, Right Hand
a = 17 - 80mm
Page 295


Precision Worms, Right Hand
a = 17 - 80mm
Page 295


Precision Worm Gears, Right Hand
a = 100 - 125mm
Page 303


Precision Worms Right Hand
a = 100 - 125mm
Page 303


Metric ISO-Trapezoidal Thread Spindles DIN 103, Single and Double Thread
Page 310


Round Nuts with Metric ISO-Trapezoidal Thread DIN 103, Single Thread
Page 313


Round Nuts with Metric ISO-Trapezoidal Thread DIN 103, Single Thread
Page 313

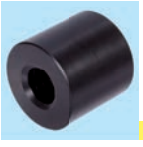
Round Nuts with Metric ISO-Trapezoidal Thread DIN 103, Single Thread
Page 313


Round Flange Nuts with Metric ISO-Trapezoidal Thread DIN 103, Single Thread
Page 314


Ready-to-Install Flange Nuts with Metric ISO-Trapezoidal Thread Single Thread
Page 314


Hexagon Nuts with Metric ISO-Trapezoidal Thread DIN 103 Single Thread
Page 315


Round Nuts with Metric ISO-Trapezoidal Thread DIN 103, Double Thread
Page 316


Round Flange Nuts with Metric ISO-Trapezoidal Thread DIN 103, Double Thread
Page 316


Ready-to-Install Flange Nuts with Metric ISO-Trapezoidal Thread Double Thread
Page 316


Ball Screw Drives, Right Hand, Rolled Version
Page 317


Ball Screw Drives, Right Hand, Rolled Version
Page 317

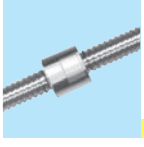
Miniature Ball Spindle Drives with Cylindrical Single Nut
Page 321

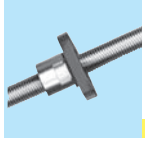
Miniature Ball Spindle Drives with Flange Nut
Page 321


Pillow Block Bearing Units BK / EK, for Fixed Side
Page 322


Pillow Block Bearing Units BF / EF, for Support Side
Page 322


Flange Bearing Units FK, for Fixed Side
Page 324


Flange Bearing Units FF, for Support Side
Page 324


Splined Shafts Cold Drawn C45 and Stainless Steel
Page 328


Splined Hubs C45 and Stainless Steel
Page 328

Splined Hubs Red Brass
Page 328

Splined Hubs with Flange C45 and Stainless Steel
Page 329

Splined Hubs with Flange Red Brass
Page 329

Clamp Collars for Splined Hub C45 and Stainless Steel
Page 329

Clamp Collars for Splined Hub Red Brass
Page 329

Locking Assemblies BAR, Steel
Page 332

Locking Assemblies BAR, QPQ Coated
Page 333

Locking Assemblies BAR, Stainless Steel
Page 334

Locking Assemblies / Clamping Bushes / Couplings


Locking Assemblies COM-A, Steel and Stainless Steel and COM-AS, Steel
Page 335


Locking Assemblies COM-B, Steel and Stainless Steel
Page 338


Locking Assemblies COM-C, Steel
Page 340


Locking Assemblies COM CB1 - CB3 Steel
Page 341


Locking Assemblies COM-D, Steel
Page 344


Locking Assemblies COM-L, Steel
Page 345


Locking Assemblies COM-LL and COM-LLH, Steel
Page 346


Locking Assemblies (Clamping Rings) COM-R, Steel
Page 348


Clamping Bushes E and E-N, Steel and Stainless Steel
Page 349


Clamping Bushes MSA, Steel
Page 350


Clamping Bushes MSD and MSD-N, Steel and Stainless Steel
Page 351


Mini Clamping Bushes MSM and MSM-N, Steel and Stainless Steel
Page 352


Locking Assemblies SIG, Stainless Steel
Page 353


Locking Assemblies SSG, Steel
Page 354


Locking Assemblies TT, Steel, 5-16mm
Page 355


Locking Assemblies TT, Steel, 17-35mm
Page 355


Shrink Disks ST and ST-B, Steel
Page 356


Shrink Disks ST-R Stainless Steel
Page 358


Locking Assemblies (Shaft Couplings) ST-K, Steel
Page 359


Taper Bushes
Page 360


Welding Hubs for Taper Bushes
Page 362


One-Piece Clamp Couplings MAS
Page 368


Two-Piece Clamp Couplings MAT
Page 368


Set Screw Couplings TR
Page 369


Box Coupling DIN 115 Made From Grey Cast Iron, without Protective Jacket
Page 369


Locking Assemblies (Shaft Couplings) ST-K, Steel
Page 370


Torsionally-Stiff Couplings HU
Page 371


Torsionally-Stiff Couplings HB
Page 371


Torsionally-Stiff Couplings HZ /HZD
Page 372


Torsionally-Stiff Couplings HF / HFD
Page 372


Self-Aligning Couplings KA, Short Version
Page 375


Self-Aligning Couplings LA, Long Version
Page 375


Flexible Couplings EK
Page 376


Flexible Couplings EL
Page 376


Metal Bellows Couplings MBK / MBL
Page 377


Metal Bellow Couplings MCK / MCL
Page 378


Membrane Couplings MEM Clamp Style
Page 379


Curved Tooth Gear Couplings BW, Polyamide
Page 380


Curved Tooth Gear Couplings BOZ, Polyamide
Page 381


Curved Tooth Gear Couplings BOS II made from Polyamide/ Sintered Metal
Page 382

Chain Couplings with casing
Page 384

Chain Couplings without casing
Page 384

Elastic Couplings MU
Page 385

Inserts for Elastic Couplings MU, Neopren
Page 385

Highly Elastic Couplings PU
Page 385

Elastic Couplings RN, Aluminium
Page 386

Elastic Couplings RNG Grey Cast Iron
Page 387

Elastic Couplings RNI Stainless Steel
Page 387

Couplings / Cardan Joints / Bearing Housings


Elastic Couplings RNT for Taper Bushes
Page 388


Elastic Couplings, backlash-free
Page 389


Spiders for Elastic Couplings, 92° Shore A
Page 391


Spiders for Elastic Couplings, 98° Shore A
Page 391


Spiders for Elastic Couplings, 64° Shore D
Page 391


Elastic Couplings DXA
Page 393


Spiders for Elastic Couplings DXA and DX, 92° Shore A
Page 393


Slip Clutches Type A, Concentric Arrangement
Page 394


Slip Clutches Type B, Axial Arrangement
Page 394


Slip Clutches Type C, Axial Arrangement
Page 394


Sliding Hubs with Torsionally-Flexible Coupling RNR
Page 395


Multi-Plate Friction Clutches PD
Page 396


Safety Clutches SI
Page 397


Limit Switch for Safety Clutches SI and CM
Page 397


Safety Clutches CM
Page 398


Sliding Hubs FS
Page 399


Sliding Hubs FA
Page 400


Sliding Hubs FAK
Page 401


Sliding Hubs ROBA®
Page 402


Ball Joints GF made from Plastic
Page 405


Cardan Joints UKM made from Plastic
Page 406


Double Cardan Joints UKD made from Plastic
Page 406


Telescopic Universal-Joint Shafts UW Made from Plastic and Brass
Page 407


Bore-Reducing Bushes
Page 407


Single Universal Joints WEL from Steel
Page 408


Double Universal Joints WDL from Steel
Page 408


Single Precision Universal Joints WE from Steel
Page 409


Double Precision Universal Joints WD from Steel
Page 409


Single Precision Universal Joints WEN with Needle Bearings from Steel
Page 410


Double Precision Universal Joints WDN with Needle Bearings from Steel
Page 410


Single Precision Universal Joints WER from Stainless Steel
Page 411


Double Precision Universal Joints WDR from Stainless Steel
Page 411


Cardan Joints KE with and without Bore from Steel
Page 412


Ball Joints RW from Steel
Page 413


Ball Joint Shafts LW with Length Compensation, from Steel
Page 413


Telescopic Precision Universal Joint Shafts PW from Steel
Page 414


Telescopic Precision Universal Joint Shafts with Needle Roller Bearings PWN, from Steel
Page 414


Slip shafts with joints PWR, Stainless Steel
Page 415


Bellows FSG for Single Universal Joints
Page 415


Thermoplastic Pillow Block Bearings igubal® KSTM
Page 418

Thermoplastic Pillow Block Bearings igubal® ESTM
Page 418

Thermoplastic Flange Bearings igubal® EFSM
Page 419

Thermoplastic Flange Bearings igubal® EFOM
Page 419

Light Duty Pillow Block Bearing HM with Bores
Page 420

Cap Bearing Version L, with Red Brass Bushes for Compression Lubricators
Page 420

Heavy-Duty Pillow Block Bearings Version A, with Red Brass Bushes
Page 421

Heavy-Duty Pillow Block Bearings Version B, without Bushes
Page 421

Flange Bearings Version A, with Red Brass Bushes
Page 422

Bearing Housings / Ball Bearings / Roller Bearings / Bearing Bushes


Flange Bearings Version B, without Bushes
Page 422


Flange Bearings Version B, with Red Brass Bushes
Page 422


Ball Pillow Block Bearings TUCP, Plastic / Stainless Steel
Page 424


Protection Caps for Thermoplastic Pillow Bearings, Plastic, closed
Page 424


Protection Caps for Thermoplastic Pillow Bearings, Plastic, open
Page 424


Ball Flange Bearings TUCF, Plastic / Stainless Steel
Page 425


Ball Flange Bearings TUCFL, Plastic / Stainless Steel
Page 425


Ball Pillow Block Bearings UCP, Grey Cast Iron
Page 426


Ball Pillow Block Bearings UCP, Grey Cast Iron
Page 426


Ball Flange Bearings UCF, Grey Cast Iron
Page 427


Ball Flange Bearings UCFL, Grey Cast Iron
Page 427


Ball Flange Bearings UCFA, Grey Cast Iron
Page 428


Ball Flange Bearings BPF, Two-Part Steel Sheet, Zinc Plated
Page 428


Ball Flange Bearings BPFL, Two-Part Steel Sheet, Zinc Plated
Page 428


Ball Pillow Block Bearings SSUCP, Stainless Steel
Page 429


Ball Pillow Block Bearings SSBPP, Stainless Steel
Page 429


Ball Flange Bearings SSUCF, Stainless Steel
Page 430


Ball Flange Bearings SSUCFL, Stainless Steel
Page 430


Ball Flange Bearings SSBPF, Stainless Steel
Page 431


Ball Flange Bearings SSBPFL, Stainless Steel
Page 431


Pillow Block Bearing Units BK / EK, for Fixed Side
Page 432


Pillow Block Bearing Units BF / EF, for Support Side
Page 432


Flange Bearing Units FK, for Fixed Side
Page 434


Flange Bearing Units FF, for Support Side
Page 434


Ball Bearings SKF®, open (not sealed)
Page 436


Ball Bearings SKF®, 2Z, with shields on both sides
Page 436


Ball Bearings SKF®, 2RS, with seals on both sides
Page 436


Ball Bearings MÄDLER®, ZZ, with shields on both sides
Page 438


Ball Bearings MÄDLER®, 2RS, with seals on both sides
Page 438


Angular Contact Ball Bearings from SKF®
Page 440


Self aligning Ball Bearings from SKF®
Page 440


Cylindrical Roller Bearings from SKF®
Page 441


Spherical Roller Bearings from SKF®
Page 441


Tapered Roller Bearings from SKF®
Page 442


Radial Shaft Seals Design A
Page 443


Bushes Version J Similar to DIN 1850 (DIN 4379 Version C), Sintered Bronze, For Plain Bearings
Page 445


Flange Bushes Version V Similar to DIN 1850 (DIN 4379 Version F), Sintered Bronze For Plain Bearings
Page 446


Raw Material Made From Sintered Bronze with Bore for Plain Bearing Production
Page 446


Raw Material Made From Sintered Bronze without Bore for Plain Bearing Production
Page 446


Cylindrical Bushes, Slotted, lubrication-free
Page 447

Flange Bushes, Slotted, lubrication-free
Page 447

Bushes BP made from Polyamide 6.6 Die Cast for Plain Bearings
Page 448

Bushes BBP made from Polyamide 6.6 Die Cast for Plain Bearings
Page 448

Cylindrical Bushes, plastic EP22
Page 449

Flange Bushes, plastic EP 22
Page 449

Cylindrical Bushes, plastic EP43
Page 450

Flange Bushes, plastic EP 43
Page 450

Cylindrical Drill Bushes DIN 179 A
Page 451

Adjusting Rings / Clamp Collars / Rod Ends / Spherical Bearings / Clevises / Linear Motion


Cylindrical Flanged Drill Bushes DIN 172 A
Page 451


Adjusting Rings DIN 703, Steel and Stainless Steel
Page 452


Adjusting Rings DIN 703, Steel Zinc Plated
Page 452


Adjusting Rings DIN 705 A, Steel, Steel Zinc Plated, or Stainless Steel
Page 453


Adjusting Rings DIN 705 A, Steel Burnished
Page 453


Slotted Clamp Collars Steel Burnished
Page 454


Slotted Clamp Collars Aluminium and Stainless Steel
Page 454


Two-Part Clamp Collars, Steel Burnished
Page 455


Two-Part Clamp Collars, Aluminium and Stainless Steel
Page 455


Clamp Collars, Double Wide, Slotted, Steel Burnished and Stainless Steel
Page 456


Clamp Collars, Double Wide, Two-Part, Steel Burnished and Stainless Steel
Page 456


Clamp Collars Slotted, with Thread, Steel Burnished
Page 457


Clamp Collars Slotted, with Thread, Stainless Steel
Page 457


Thermoplastic Rod Ends igubal® KCRM and KCLM
Page 461


Rod Ends GS, Series K, Internal Thread
Page 462


Rod Ends GS, Series K External Thread
Page 462


Rod Ends GT, Series K, Maintenance Free, Internal Thread
Page 463


Rod Ends GT, Series K, Maintenance Free, External Thread
Page 463


Rod Ends GT-R, Series K, Maintenance Free, Stainless Steel, Internal Thread
Page 464


Rod Ends GT-R, Series K, Maintenance Free, Stainless Steel, External Thread
Page 464


Rod Ends GEW Series E, Maintenance Free, Internal Thread
Page 465


Rod Ends GAW Series E, Maintenance Free, External Thread
Page 465


Rod Ends BR and BR-R with Spherical Bearing, Steel and Stainless Steel, Internal Thread
Page 466


Rod Ends BR and BR-R with Spherical Bearing, Steel and Stainless Steel, External Thread
Page 466


Rod Ends PF with Spherical Bearing, Internal Thread
Page 468

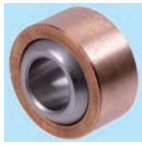
Spherical Bearings Series K, Steel and Stainless Steel
Page 469


Spherical Bearings Series K, with Outer Ring, Steel and Stainless Steel
Page 469


Radial Spherical Bearings Series E, re-lubricateable, Steel
Page 471


Radial Spherical Bearings Series E, maintenance-free, Steel and Stainless Steel
Page 471


Clevis Joints similar to DIN 71752, Aluminium
Page 472


Clevises similar to DIN 71752, Aluminium
Page 472


Clevis Joints DIN 71752, Stainless Steel and Steel Zinc Plated
Page 473


Clevises DIN 71752, Stainless Steel and Steel Zinc Plated
Page 473


ES Bolts, Zinc Plated
Page 473


Clevis Joints DIN 71752 with External Thread, Zinc Plated
Page 474


Clevises DIN 71752 with External Thread, Zinc Plated
Page 474


Mating Pieces for Clevises DIN 71752 with Internal Thread, Zinc Plated
Page 474


Angle Joints DIN 71802, Zinc-plated and Stainless
Page 475


Sealing Caps for Angle Joints DIN 71802
Page 475


Silver Steel Material No. 1.2210 (115CrV3) according to DIN 175 (h9) ground and polished
Page 477

Shaft Steel Hardened and Ground, Material CF53 and CF 53 chromated
Page 478

Shaft Steel Hardened and Ground, Material Stainless Steel X46 and X90
Page 478

Shaft Steel with Shaft Support
Page 479

Shaft Steel with Shaft Support
Page 479

Flange Shaft Blocks GWFL, universal use
Page 480

Flange Shaft Blocks GWF, universal use
Page 480

Flange Shaft Blocks GWL / GWLE, universal use
Page 481

Shaft Blocks GW-1
Page 482

Linear Motion / Fixing Elements


Double Shaft Blocks GWD-1
Page 482


Linear Bearings KB-1
Page 483


Linear Bearing Units KG-1
Page 483


Linear Bearings KB-1, Economy-Line
Page 484


Linear Bearing Units KG-1, Economy-Line
Page 484


Linear Bearings KB-1, Stainless Steel
Page 485


Linear Bearing Units KG-1, Stainless Steel
Page 485


Tandem Linear Bearing Units KGT-1
Page 486


Quadro Linear Bearing Units KGQ-1
Page 486


Shaft Blocks GW
Page 487


Shaft Blocks GW-3
Page 487


Double Shaft Blocks GWD-3
Page 488


Linear Bearings KB-3 Closed
Page 489


Linear Bearings KB-3-O Open
Page 489


Linear Bearings KB-3 Closed, Economy-Line
Page 491


Linear Bearings KB-3-O Open, Economy-Line
Page 491


Linear Slide Bearings PO-3 Closed
Page 492


Linear Slide Bearings PO-3-O Open
Page 492


Precision Housing KG Closed
Page 493


Precision Housing KG-0 Open
Page 493


Linear Bearing Units KG-3-K Closed
Page 494


Linear Bearing Units KG-3-KO Open
Page 494


Linear Bearing Units KG-3-F Closed, Flange Version
Page 495


Linear Bearing Units KG-3 Closed
Page 496


Linear Bearing Units KG-3-O Open
Page 496


Tandem Linear Bearing Units KGT-3 Closed
Page 498


Tandem Linear Bearing Units KGT-3-O Open
Page 498


Quadro Linear Bearing Units KGQ-3, Closed
Page 500


Quadro Linear Bearing Units KGQ-3-O Open
Page 500


Profiled Track Rollers LFR
Page 502


Bolts for Profil Track Rollers
Page 503


Precision Rail-Guide Sets RE and RE-ACS
Page 504


Miniature Profile-Rail Guides
Page 505


Miniature Slide Units
Page 506


Linear Motion Guides DFG 115, Friction Guides
Page 507


Cup Rollers with Fastening Element
Page 508

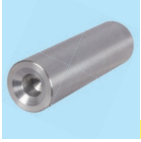
Assembly Plugs for Cup Rollers
Page 508


Cup Rollers with Steel-Sheet Housing
Page 509


Tolerance Rings for Cup Rollers
Page 509


Threaded Bars DIN 975 (DIN 976-1 Form A)
Page 510

Threaded Bars DIN 975 (DIN 976-1 Form A)
Page 510

Hexagon Nuts DIN 934
Page 511

Hexagon Nuts DIN 934, Brass
Page 511

Hexagon Nuts 2308 with Ball Cup
Page 511

Hexagon Nuts DIN 6330
Page 512

Hexagon Nuts DIN 6331 with Collar
Page 512

Extension Nuts 6334 (Height 3 x d)
Page 512

Turnbuckle Nuts DIN 1478, Made From Seamless Steel Tube, Zinc Plated
Page 513

Fixing Elements / Operating Parts / Knobs


Turnbuckle Nuts DIN 1479 Untreated or Zinc Plated
Page 513

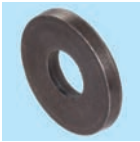
Washers DIN 6340 (extra thick)
Page 513


Retaining Rings DIN 471 for shafts
Page 514


Retaining Rings DIN 472 for boreholes
Page 514


Locknuts DIN 981 and UW with Locking Device, Steel and Stainless Steel
Page 515


Lockwashers DIN 5406 for Locknuts, Steel and Stainless Steel
Page 515


Hook Spanner DIN 1810 A
Page 516


Locknuts KMK, Steel
Page 517


Locknuts KMT, Steel
Page 517


Nuts for T-Slots DIN 508
Page 518


Bolts for T-Slots DIN 787
Page 518


Knurled Nuts DIN 466, Steel and Stainless Steel
Page 519


Flat Knurled Nuts DIN 467, Steel and Stainless Steel
Page 519


Knurled Nuts DIN 6303, Steel and Stainless Steel
Page 519


Hollow Knurled Nuts DIN 420, Steel and Stainless Steel
Page 520


Hollow Thumb Screws 421, Steel and Stainless Steel
Page 520


Knurled Thumb Screws DIN 464, Burnished Steel and Stainless Steel
Page 521


Knurled Thumb Screws DIN 653, Burnished Steel and Stainless Steel
Page 521


Swing Bolts Similar to DIN 444, Steel and Stainless Steel
Page 522


Spherical washers DIN 6319, Steel and Stainless Steel
Page 523

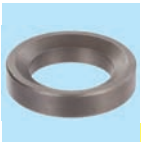
Conical Seats DIN 6319, Steel and Stainless Steel
Page 523


Ball-Ended Thrust Screws with full ball
Page 524


Ball-Ended Thrust Screws with flat-faced ball
Page 524


Thrust Screws with Brass bolts
Page 524


Spring Plungers with Ball and Head, Free Cutting Steel or Stainless Steel
Page 525


Spring Plungers with Ball and Slot, Steel burnished or Stainless Steel
Page 525


Spring Plungers Plastic Version
Page 525


Spring Plungers with Ball and Internal Hexagon, Stainless
Page 526


Spring Plungers with Internal Hexagon, Steel burnished or Stainless Steel
Page 526


Spring Plungers Smooth
Page 527


Spring Plungers Smooth, Stainless
Page 527


Spring Plungers, double-sided
Page 527


Spring-Action Side Thrust Pins 2214 Version A, Ball Stainless
Page 528


Spring-Action Side Thrust Pins 2214 Version B, Steel Ball
Page 528


Cam-Action Indexing Plungers 612, Made from Steel
Page 532


Cam-Action Indexing Plungers 612, Made from Stainless Steel
Page 532


Indexing Plungers 417 A
Page 533


Indexing Plungers 417 B and C
Page 533


Indexing Plungers 717 A
Page 534


Indexing Plungers 717 B and C
Page 534

Indexing Plungers 817, Made from Steel
Page 536

Indexing Plungers 817, Made from Stainless Steel
Page 536

Control Knobs 726.1
Page 537

Star Grips DIN 6335 GG
Page 538

Star Grips Similar to DIN 6335 Pr
Page 538

Star Grips with Axial Bearing
Page 538

Star Grip Screws with Axial Bearing
Page 538

Star Grips DIN 6336 GG
Page 539

Knobs / Operating Parts / Handles


Star Grips
Similar to DIN 6336 Pr
Page 539


Star Grips
Similar to DIN 6336
AL
Page 539


Star Grips 5335
Stainless Steel
Page 539


Star Grips 5334
Stainless Steel
Page 540


Star Grip Screws 5334
Stainless Steel
Page 540


Star Grips
Similar to DIN 6336,
Made From
Thermoplastics
Page 541


Star Grip Screws
Similar to DIN 6336
Page 541


Triangular Knobs,
Made from Plastic
Page 542


Triangular Knob
Screws, Made from
Plastic
Page 542


Triangular Knobs,
Made from Stainless
Steel
Page 542


Knurled Knobs,
Made from Plastic
Page 543


Knurled Knob Screws,
Made from Plastic
Page 543


Wing Nuts, Plastic
Page 544


Wing Screws,
Plastic
Page 544


Wing Nuts,
Stainless Steel
Page 544


Wing Screws,
Stainless Steel
Page 544


Ball Knobs
DIN 319 PF, Plastic
Page 545


Ball Knobs Similar to
DIN 319, Metal
Page 545


Revolving Ball Knobs
3192
Page 546


Gear Lever Handles
209 with Ball Knob
DIN 319, Steel Zinc
Plated, or Stainless
Page 546


Gear Lever Handles
209 with Cylindrical
Grip, Steel Zinc Plated,
or Stainless
Page 546


Revolving Cylindrical
Grips 598
Page 547


Retractable Handles
NG
Page 547


Cylindrical Knobs,
Press-on Type
Page 547


Fixed Handles
DIN 39 St
Page 548


Fixed Handles
DIN 39 Pr
Page 548


Fixed Handles
DIN 39 AL
Page 548


Revolving Handles
DIN 98 St
Page 549


Revolving Handles
DIN 98 Pr
Page 549


Revolving Handles
DIN 98 AL
Page 549


Adjustable Clamping
Levers 355 from
Plastic
Page 550


Adjustable Clamping
Levers 355 from
Plastic with External
Thread
Page 550


Adjustable Clamping
Levers 120
Page 551


Adjustable Clamping
Levers 120
with External Thread
Page 551


Adjustable Clamping
Levers 300,
Page 552


Adjustable Clamping
Levers 300, with
External Thread,
Page 552


Adjustable Clamping
Levers 300.5
stainless
Page 553


Adjustable Clamping
Levers 300.5, with
External Thread,
Stainless
Page 553


Eccentric Clamps
Version A and B,
with Internal Thread
Page 554


Eccentric Clamps
Version A and B,
with External Thread
Page 554

Clamp Nuts DIN 99 St
Made From Steel
Page 555

Clamp Nuts DIN 99 St
Made From Stainless
Steel
Page 555

Adjustable Clamp
Nuts 119 St
Page 555

Clamp Nuts 202 Tg
Cast Steel and
Stainless Steel
Page 555

Cylindrical Clamp
Nuts, Steel and
Stainless Steel
Page 556

Clamp Nuts with
Double Lever, Steel
and Stainless Steel
Page 556

Control Levers 223 St
Page 557

Control Levers with
Long Hub
2120 St
Page 557

Handles / Handwheels / Latch Clamps / Assortment Boxes / Feather Keys


Cabinet "U" Handles 525 made From Polyamide
Page 558


Cabinet "U" Handles 725 made From Polypropylene
Page 558


Cabinet "U" Handles 528 made From Polyamide or Polypropylene
Page 558


Cabinet "U" Handles 565 aluminium, black coated
Page 559


Cabinet "U" Handles 565.1 aluminium, black coated
Page 559


Cabinet "U" Handles 565.2 aluminium, black coated
Page 559


Cabinet "U" Handles 426 Aluminium, Black Coated
Page 560


Cabinet "U" Handles 426.1 Aluminium, Black Coated
Page 560


Arch handles, Aluminium
Page 560


Arch handles Aluminium, Black Coated
Page 560


Cabinet "U" Handles 425, Chrome plated or Stainless Steel
Page 561


Folding Handles Made From Steel or Stainless Steel
Page 561


Folding Handle with Recessed Tray 425.4
Page 561


Tubular Handles with Inclined Feet, Aluminium
Page 562


Tubular Handles with Inclined Feet, Aluminium
Page 562


Tubular Handles with Straight Feet, Aluminium
Page 562


Tubular Handles with Straight Feet, Stainless Steel
Page 562


Tri-Ball Handles 2140
Page 563


Hand Cranks DIN 468 Tg
Page 563


Hand Cranks DIN 469 Tg
Page 563


Hand Cranks 471
Page 564


Hand Cranks 569, plastic
Page 564


Turret Levers 2130 St
Page 564


Handwheels, Stainless Steel
Page 565


Handwheels, Stainless Steel, Solid Version
Page 565


Handwheels, Stainless Steel, Solid Version similar to DIN 950
Page 565


Handwheels 527.1 with Peripheral Grooves, Plastic
Page 566


Spoked Handwheels 522, with Revolving Cylindrical Handle, Plastic
Page 566


Retractable-Handle Handwheels 5223, Plastic
Page 566


Spoked Handwheels DIN 950, Grey Cast
Page 567


Handwheels 527.1 with Peripheral Grooves, Plastic
Page 567


Spoked Handwheels DIN 950, Aluminium
Page 568


Solid-Disk Handwheels similar to DIN 950, Aluminium
Page 568


Solid-Disk Handwheels DIN 3670, with Recessed Grips, Aluminium
Page 569


Solid-Disk Handwheels 323, Aluminium
Page 569


Retractable-Handle Handwheels 3223, Aluminium
Page 569


Spoked Handwheels 320, Aluminium
Page 570


Solid-Disk Handwheels 326, Aluminium
Page 570


Safety Handwheels SHR, Aluminium
Page 570


Lifting Pins, Self-Locking
Page 571

Socket Pins with Spring-Loaded Balls, Self-Locking
Page 571

Latch Clamps Zinc Plated Steel and Stainless Steel
Page 572

Quick Clamps (Vertical Clamps with Horizontal Base)
Page 573

Quick Clamps (Horizontal Clamps with Horizontal Base)
Page 574

Clamping bolts and Protective Caps for Quick Clamps
Page 574

KL Retainers, Steel zinc plated
Page 575

SL Retainers, Steel zinc plated
Page 575

Assortment Boxes KL or SL Retainers
Page 576

Key Steel / Edge Trims / Oilers / Machine Feets / Dampers / Pneumatic Elements


Assortment Box Washers and Pins
Page 577


Assortment Box Feather Keys and Slotted Clamp Collars
Page 577

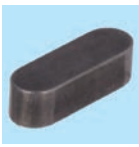
Feather Keys DIN 6885 Steel and Stainless Steel
Page 578


Bright Key Steel DIN 6880 Steel and Stainless Steel
Page 578

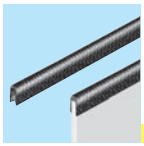
Edge Trims
Page 580

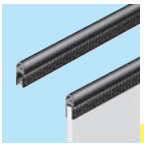
Trim Seals
Page 581


Automatic Lubricators "perma"
Page 582


Drip-Feed Oiler System Unikum with Adjustment from Top
Page 583


Drip-Feed Oiler UNI with Adjustment from Top
Page 583


Electric Drip-Feed Oiler ELO
Page 584


Oil-Level Sight Glasses 541 from Plastic
Page 585


Oil-Level Sight Glasses 743 and . 743.1 from Aluminium
Page 585


Oil-Level Windows SR
Page 586


Stauffer Grease Boxes DIN 3411
Page 586

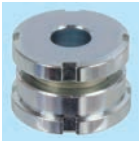
Precision Adjusters MN 686.3 and MN 686.6
Page 590


Ball Head Precision Adjusters MN 686.4 and MN 686.7
Page 591


Precision Levellers MN 686.1 and MN 686.2
Page 592


Ball Head Precision Adjusters MN 686.8 and MN 686.9
Page 593

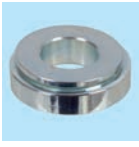
Ball Shims MN 686.5
Page 594


Spacers MN 686.D
Page 594


Hook Spanner DIN 1810 A
Page 594


Grub Screws DIN 6332 with Thrust Point
Page 595


Thrust Pads with Spring Retainer, DIN 6311 and Factory Standard
Page 595


Levelling Pads 2259 Steel Burnished and Stainless Steel
Page 596


Levelling Pads 2259, Stainless Steel with POM
Page 596


Levelling Pads 2259 Steel Burnished and Stainless Steel
Page 596


Articulated Feet 344 and 344.5 Plastic with Steel or Stainless Steel Screw
Page 597


Levelling Feet 340/340.5 Made From Steel or Stainless Steel
Page 598


Machine Mounts KA with Chromated Steel Plate and Vacuum Profile
Page 599


Machine Mounts, Failsafe
Page 599

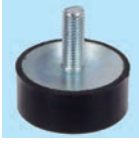
Metal Bump Stop MGS with Threaded Stud
Page 600


Rubber-Metal Bump Stops MGK, Conical, External Thread
Page 601


Rubber-Metal Bump Stops MGK, Conical, Internal Thread
Page 601


Rubber-Metal Buffers KP
Page 601


Rubber-Metal Buffers KE
Page 601


Rubber-Metal Buffers MGP with Threaded Studs
Page 602


Rubber-Metal Buffers AT
Page 603


Rubber-Metal Buffers CT
Page 603


Rubber-Metal Buffers MGA with Internal Thread and Threaded Stud
Page 604


Rubber-Metal Buffers MGI, with internal thread
Page 605

Heavy-duty bushes PHO
Page 606

Profile Dampers TR Radial Damping
Page 607

Profile Dampers TA Axial Damping
Page 608

Profile Dampers TS Axial, Soft Damping
Page 609

Miniature Shock Absorbers
Page 610

Lock Nuts
Page 610

Mounting Blocks
Page 611

Clamp Mounts
Page 611

Pneumatic Elements

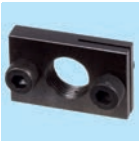
Rectangular Flanges
Page 611


Double-Acting Standard Cylinders According to ISO 15552 with Magnetic Piston
Page 614


Double-Acting Compact Cylinders with Magnetic Piston, According to ISO 21287
Page 616


Double-Acting Round-Line Cylinders According to ISO 6432 with Magnetic Piston
Page 618


Rear Flanges, Front Flanges
Page 620


Foot Plate Mountings
Page 620


Rear Eye Mountings
Page 620


Rear Eye Mountings with Spherical Bearing
Page 621


Rear Clevis Mountings for wide Clevis
Page 621


Bracket Hinge Mountings, Rigid, Wide, Mating Piece for Clevis Mountings
Page 621


Rear Clevis Mountings, Slim Clevis
Page 622


Bracket Hinge Mountings with Spherical Bearing, for Clevis Mountings
Page 622


Trunnion Mountings (front or rear)
Page 622


Swivel Bearings
Page 623


Clevises
Page 623


Bracket Hinge Mountings, Rigid, Slim, Mating Piece for Clevis
Page 623


Universal Piston Rod Mountings with Spherical Bearing
Page 624


Piston Rod Swivel Mountings
Page 624


Trunnion Mountings
Page 624


Foot Plate Mountings
Page 625

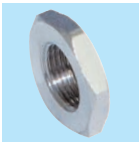
Nuts for the Piston Rod Bearing
Page 625


Mounting Elements for Magnetic Switch at Profile Barrel
Page 625


Bracket Hinge Mountings, Rear, with Circlip
Page 626


Bracket Hinge Mountings with Split Pin
Page 626


Magnetic Switch with Reed Contact Cable length 5m
Page 627


Magnetic Switch with Reed Contact
Page 627


Plug-in Connector Cable
Page 627


Magnetic Switch, Solid State Cable length 5m
Page 628


Magnetic Switch, Solid State
Page 628


2/2 Solenoid Valves DN 10, Short Version
Page 629


2/2 Solenoid Valves, DN 20 and DN 25, Standard Length
Page 630


3/2 Solenoid Valves, Single Pilot
Page 631


5/2 Solenoid Valves, Single Pilot
Page 632


5/2 Solenoid Valves, Twin Pilot
Page 632


5/3 Solenoid Valves Twin Pilot
Page 633


Socket according to DIN 43650, without Cable
Page 633


Spare Solenoids
Page 633


Air Preparation Equipment
Page 634


Pressure Regulators
Page 635


Compressed Air Filters
Page 635

Filter / Regulators
Page 636

Micro-Fog or Standard Fog Oilers
Page 636

Pressure Relief Valve
Page 636

3/2 Solenoid Shut-Off Valve (manual)
Page 637

Universal Mounting Bracket
Page 637

Universal Mounting Bracket / Panel Mounting Nut
Page 637

Pressure Gauge
Page 637

Straight Unions / Union Elbows
Page 639

Pneumatic Elements / Gear Boxes


Swivel Elbow Adaptors with Taper Thread / with Parallel Thread
Page 639


Straight Adaptors with Taper Thread / with Parallel Thread
Page 639


Swivel Tee-Adaptors
Page 639


Straight Unions / Reducing Connectors / Enlarging Connectors
Page 640


Push-In Silencers
Page 640


Plugs
Page 640


Straight Adaptors with Parallel Thread
Page 640


Swivel Elbow Adaptors 90° and 45°
Page 641


Elbow Connectors / Swivel Elbow Bulkhead Connectors
Page 641


Tee Connectors / Stem Elbow Connectors
Page 641


Cross Connectors / Parallel Y-Connectors
Page 641


Elbow Banjo Assembly with Sealing Ring
Page 642


Elbow Banjo Assembly, Regulating Out
Page 642


Banjo Bolts with Sealing Rings
Page 642


Ball Valves Made From Brass, Exhausting, Full Bore
Page 644


Ball Valves Made From Brass, Full Bore
Page 644


Exhaust filters
Page 645


Silencers
Page 645


Block Form Flow Regulators, Unidirectional
Page 646


Quick Exhaust Valves
Page 646


Non-Return Valves
Page 647


Plugs with Sealing Ring
Page 647


Tube Cutters
Page 647


Disconnection Tool
Page 647


Polyamide Tubes PA
Page 648


Polyurethane Hoses PU
Page 648


Blow Gun with Metal Nozzle
Page 649


Blow Gun with Straight, Scratch Resistant Nozzle
Page 649


Blow Gun with Silent Nozzle
Page 649


Hose Coils with Swivelling Hose Tail
Page 650


Flexible Hoses
Page 650


Hose Tail Pieces with Taper External Thread
Page 650


Standard and Safety Quick-Release Couplings with Internal Thread
Page 651


Standard and Safety Quick-Release Couplings with External Thread
Page 651


Standard and Safety Quick-Release Couplings with Hose Connection
Page 651


Adaptors with Internal Thread for Standard and Safety Quick-Release Couplings
Page 652


Adaptors with External Thread for Standard and Safety Quick-Release Couplings
Page 652


Adaptors with Hose Connection for Standard and Safety Quick-Release Couplings
Page 652


Helical Gearboxes Type BT/I with Two Shaft Ends, 2-Stage
Page 657


Shaft Mounted Gearboxes Type BOC/I, 2-Stage
Page 662

Bevel Gearboxes Type HUG
Page 666

Angular Drives with Plastic Bevel Gears on Metal Plate
Page 666

Bevel Gearboxes Type KEK
Page 667

Bevel Gearboxes Type DZA
Page 668

Bevel Gearboxes Type DZR, Stainless
Page 670

Bevel Gearboxes Type DZA Model H
Page 672

Bevel Gearboxes Type KU/I Model K
Page 673

Bevel Gearboxes Type KU/I Model L
Page 677

Gear Boxes / Motors / Control Units / Geared Motors


Bevel Gearboxes Type KU/I Model H
Page 679


Worm Gear Units Type G/II
Page 680


Worm Gear Units Type KES
Page 681


Worm Gear Units Type H/I
Page 682


Output Shaft Single-Sided / Double-Sided
Page 682


Worm Gear Units Type ZM/I, Version A
Page 685


Worm Gear Units Type ZM/I, Version HL
Page 685


Standard Three-Phase Motors Type SM/I B3
Page 692


Standard Three-Phase Motors Type SM/I B5
Page 692


Motor-Tensioning Rail Sets SPS
Page 695


Control Unit SFRG 05
Page 696


Control Unit SFRG 3
Page 697

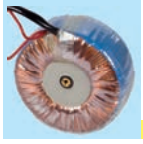
Toroidal Transformers
Page 697


Frequency Converters Hitachi NES1
Page 698


Frequency Inverters Type ROfre 897 with Power Cable
Page 699


Frequency Inverters Type ROfre 897 with Power Cable and Emergency-Stop Button
Page 699


Small Geared Motors Type CRO A
Page 700


Small Geared Motors Type CRO B
Page 700


Small Geared Motors Type GE/I with Capacitor Motor
Page 702


Small Geared Motors Type GE/I with DC Motor
Page 703


Small Geared Motors Type SF
Page 704


Small Geared Motors Type SFS Size 2
Page 705


Small Geared Motors Type SFS Size 3
Page 706


Small Geared Motors Type SG
Page 707


Small Geared Motors Type SG-H with Hollow Shaft
Page 708


Planetary Small Geared Motors Type PE Size 1
Page 709


Planetary Small Geared Motors Type PE Size 2
Page 710


Small Geared Motors Type SE Size 1
Page 711


Small Geared Motors Type SE Size 2
Page 712


Small Geared Motors Type SE Size 3
Page 713


Helical-Geared Motors Type HR/I
Page 714


Output-Flanges for Helical-Geared Motors Type HR/I
Page 717


Helical-Geared Motors Type NR/I
Page 719


Operating Capacitors Type KST
Page 722


Worm-Geared Motors Type MEK with One-Stage Worm Gear Unit
Page 723


Worm-Geared Motors Type MEG with One-Stage Worm Gear Unit
Page 724


Worm-Geared Motors Type MH with One-Stage Worm Gear Unit and Hollow Shaft
Page 725


Worm Helical Geared Motors Type SRM
Page 726


Worm-Geared Motors Type R with One-Stage Worm Gear Unit
Page 727


Worm-Geared Motors Type RH with One-Stage Worm Gear Unit and Hollow Shaft
Page 728

Worm Helical Geared Motors Type SRS
Page 729

Worm-Geared Motors Type MZ with Two-Stage Worm Gear Unit
Page 730

Worm-Geared Motors Type RL with Two-Stage Worm Gear Unit
Page 731

Worm-Geared Motors Type RM with Two-Stage Worm Gear Unit
Page 732

Worm-Geared Motors Type RS with Two-Stage Worm Gear Unit
Page 733

Worm Geared Motors Type HMD/I
Page 734

Output Shafts HMD Single-Sided / Double-Sided
Page 736

Foot Mountings HMD/I
Page 736

Geared Motors / Actuators / Screw Jacks / Telescopic Slides / Chemical Products


Output-Side Flanges HMD/I
Page 737


Torque Arms HMD/I
Page 737


Worm Geared Motors Type HMD/II
Page 739


Output Shafts HMD Single-Sided / Double-Sided
Page 741


Output-Side Flanges HMD/II, square
Page 742


Output-Side Flanges HMD/II, round
Page 742


Torque Arms HMD/II
Page 742


Worm Geared Motors Type ZMD/I
Page 744


Geared Motors Type MUN/I with Helical Gearbox
Page 753


Geared Motors Type MUN/I with Worm Gear Unit
Page 754


Ready-to-Install Actuator Systems GR/I, 230V AC/50Hz or 24V DC
Page 758


Control Boxes for Linear Actuators GR/I
Page 759


Hand Operators for Linear Actuators GR/I
Page 759


Actuator Type SFL, 12 - 24V
Page 760


Spindles for linear drives SFL
Page 760


Lifting Devices: Complete Screw Jack Systems
Page 761


Worm Gear Screw Jacks Type NP/I Version A and B
Page 762


Worm Gear Screw Jacks Type NP/I Version C
Page 762


Flange Plates for Version A and B
Page 763


Fastening Stripes
Page 763


Bellows Type FB
Page 764


End Switches Type ES-2 with Roller Push Rod
Page 764


Connecting Shafts Type RNW, universal use
Page 766



Telescopic Slides: Content sorted numerically
Page 769


Slides for Keyboards
Page 772


Slides with Partial Extension
Page 774


Slides with Bi-Directional Extension
Page 775


Extension slides from stainless steel
Page 778


Slides with Full Extension
Page 780


Slides with Over-Extension
Page 788


Slides with Mounting Bracket
Page 798


Heavy-Duty Slides
Page 805


Brackets Type 633
Page 807


Bracket Kits Type 634
Page 807


Linear motion guide with ball carriage
Page 809


Linear Motion Guides DFG 115, Friction Guides
Page 810

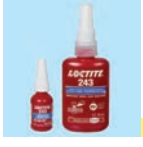
LOCTITE® Thread Locking Products
Page 811

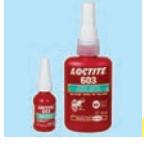
LOCTITE® Bonding Products
Page 812


LOCTITE® Instant Adhesives
Page 813


LOCTITE® Universal Instant Adhesive, Non-Drip Gel
Page 813

LOCTITE® Medium Strength Standard Flange Sealant / Permanently Elastic Adhesive/Sealant
Page 814

LOCTITE® Permanently Elastic Flange Seal Ultra Copper / Adhesive- and Sealant-Remover
Page 814

Multi-Function Spray WD-40® / Long-Term Corrosion Protection Spray
Page 815

Chain Lubricating Spray / PTFE Spray
Page 815

Spray Cleaner / Zinc Repair Spray
Page 815

Aluminium Spray / Stainless Steel Spray
Page 815

Hinges at MÄDLER®:



on the internet at www.maedler.de

MÄDLER®

GEGRÜNDET 1882

Your Power Transmission Supplier

- 135 years of experience
- top quality
- very extensive product range
- more than over 25,000 parts immediately available
- distributors in more than 30 countries













www.maedler.de

...we keep things moving







The Company



MÄDLER® GmbH
Head office Stuttgart



MÄDLER® GmbH
Düsseldorf branch



MÄDLER® GmbH
Hamburg branch



MÄDLER® Norm-Antrieb AG
Swiss Subsidiary

On November 9th, 1882 the foundations were laid in Berlin. Bruno Mädler went self employed. He was dealing with fittings and hardware for the building industry, rivets, screws, bolts and nuts.

But business went booming fast. In 1905 the company proudly moved into their first own company building. The numbers of customers, products and employees were quickly rising. Thus in the 30ies the company had about 300 employees and was one of the leading tool building and mechanical engineering companies in Germany.

The end of world war II in 1945 brought along drastic changes, also for Bruno Mädler. Two months before the end of the war: air raid on Berlin. Hardly one stone remained on the other. The ***MÄDLER®*** company building in Koepenicker Street was completely destroyed.

When the rebuilding began, nobody new about the separation of Berlin that would later take place. The decision for a restart in East Berlin therefore evolved as momentous: The trade company was thus later managed as a trust and in 1972 the company was officially converted into public property.

The branch in West Berlin, which had been started at the same time, took a different development. After the war it became the new basis for company development. But: the strong competition of the free-market economy made the company change its approach. The main goal was now to find new, promising market niches.

And in fact, a sector that was perfectly suited could be found: gear elements, gear units, geared motors, machine building elements, standard parts and threaded spindles with accessories offered good future perspectives.

And the further development showed how correct this estimation had been. 1959 the branch in Stuttgart was founded, followed by Dusseldorf in 1963.

An even bigger step followed in 1968: Due to supply shortages and the high demands we have always had on quality we started to be interested in building up our own production and in 1968 we got the chance to join up with a company.

This cooperation went so well, that in 1984 our first own production site, the toothing and gearing technology company Verzahnungstechnik Mädler GmbH, was founded. At the same time a number of other things happened:

- 1970: the company headquarters are moved from Berlin to Stuttgart.
- 1975: the subsidiary in Hamburg is founded.
- 1977: the business premises in Berlin are being closed.
- 1978: the Transnord GmbH in Hamburg is founded, with participation of the ***MÄDLER®*** GmbH.
- 1978: ***MÄDLER®*** also starts trading in the neighbouring countries. The company ***MÄDLER®*** Norm-Antrieb AG in Feuerthalen/ Switzerland starts making business.
- 1988 the headquarters in Stuttgart move into their new, own premises. 1990 the subsidiary in Dusseldorf moves - for the same reason.
- 2004 the area in Stuttgart is extended by about 3000 sqm.
- 2007 the Madler-Silvertech Power Transmission Components LTD. was founded in Shenzen. This is the third factory of ***MÄDLER®***.
- 2010: the subsidiary in Hamburg moves together with the factory Transnord into new buildings in Stapelfeld near Hamburg.
- 2012 the area in Stuttgart is extended by about 5400 sqm.
- 2015 in Stuttgart, the central stock is extended by a new hall. The factory in Stuttgart moves into a new, bigger building.
- 2017: the central stock is extended by a fully automatic high-rise storage system.



The Product Development



What once started with a few hundred parts, progressed rapidly. All company areas - whether trade or production schedule, driving, gearing or long-thread technology - have developed a variety that nobody would have expected.

A result to be proud of, and which the about 135 ***MÄDLER®*** employees gain from their 32,000 active customers. Then again, there is still a lot of potential left.

From more than 25,000 parts in the catalogue product range, about 6,000 articles are produced by the own manufacturing companies to ensure the high quality level.

The Standard Programme

The ***MÄDLER®*** standard range is mainly oriented on the general demand from our international business partners and is continuously extended with standard parts as well as technical innovations.
To some extend the standard range is complemented with our own ***MÄDLER®*** products as, e.g., trapezoidal thread spindles with nuts, splined hubs with clamp collars, sprockets and so on.

Especially in the spare parts range an immediate supply - ex stock - is an absolute necessity which can reduce costs induced by machine downtimes. In this field ***MÄDLER®*** offers a wide range of standard parts and a wide-spread, reliable distribution network offering you fast solutions for your problems.
You can take us at our word...



MÄDLER® meets even the highest quality requirements: Top quality, precision and reliability.





Custom-Made Products

The modern production machinery and our team of specialised; skilled workers serve as a basis for another main part of our production: Custom-made products according to drawings or your specifications, from one-off production up to large series, at a good price and with short delivery times- with perfect quality control, and flexible as today's market demands: Spur toothed gears, gear racks, bevel gears, worm gears and worms, trapezoidal threaded spindles and nuts, splined shafts, spilned hubs and clamp collars.

Our Own Production









The ***MÄDLER***® group produces its parts at two manufacturing sites in Germany, in Stuttgart and Hamburg. There specialised workers produce our own ***MÄDLER***® -product range on the most modern CNC machinery.

One-off production according to drawings or samples up to larger series. with a perfect quality control, flexible, as today's market demands.

The most important prerequisite is a highly qualified and also cost-effective production and a guarantee for shortest delivery times for all parts listed in the yellow ***MÄDLER***® catalogues and the internet.

Another factory is in China. This joint-venture enables simplier mass parts due to german quality standards at low prices.

We keep things moving

Ballscrew Spindle Drives

MÄDLER® can supply you with ballscrew spindle drives matching your special specifications.

More detailed information on page 317.

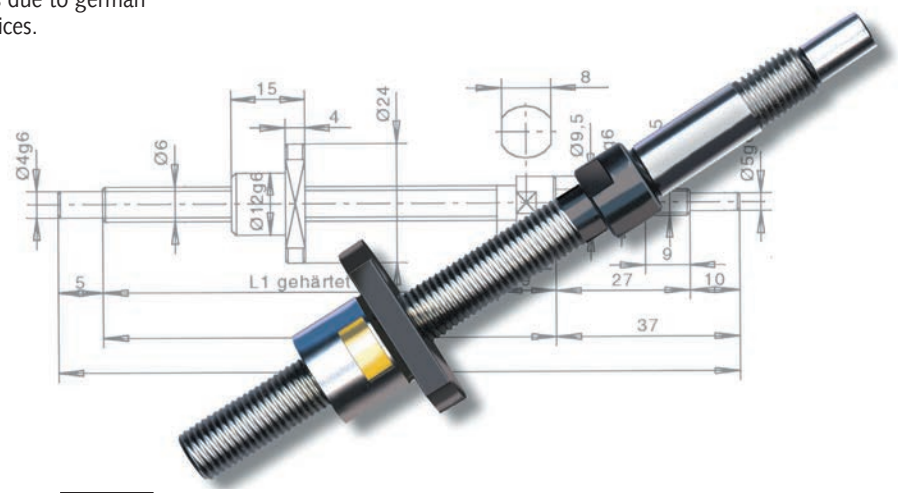

www.maedler.de

...the entire MÄDLER® range with CAD files on the Internet

We present the entire ***MÄDLER***® range with CAD files and ***MÄDLER***® info, continuously updated, on the internet. Fast access to the data, fast ordering by internet.
Orders by internet, phone, fax or e-mail: We guarantee delivery at short notice.





Dimensions and other information in this catalogue display the current state of technology. We reserve the right for changes.
This catalogue was created with due diligence, but errors might still occur. We refuse to accept any claims in this respect. We reserve the right to alter dimensions, and to change or remove single products and product groups without prior notice. Our general conditions of sales, delivery and payment can be found on the last page of this catalogue.

...we keep things moving

Come and visit our booth at a fair and get detailed information on our entire product range. Exact dates at: www.maedler.de



Please use our website

at www.maedler.de

Put in a search word or part number and go directly to the product page

Find the PDF-catalogue page and further information

Manual instructions, certificates, safety data sheets in the section Downloads

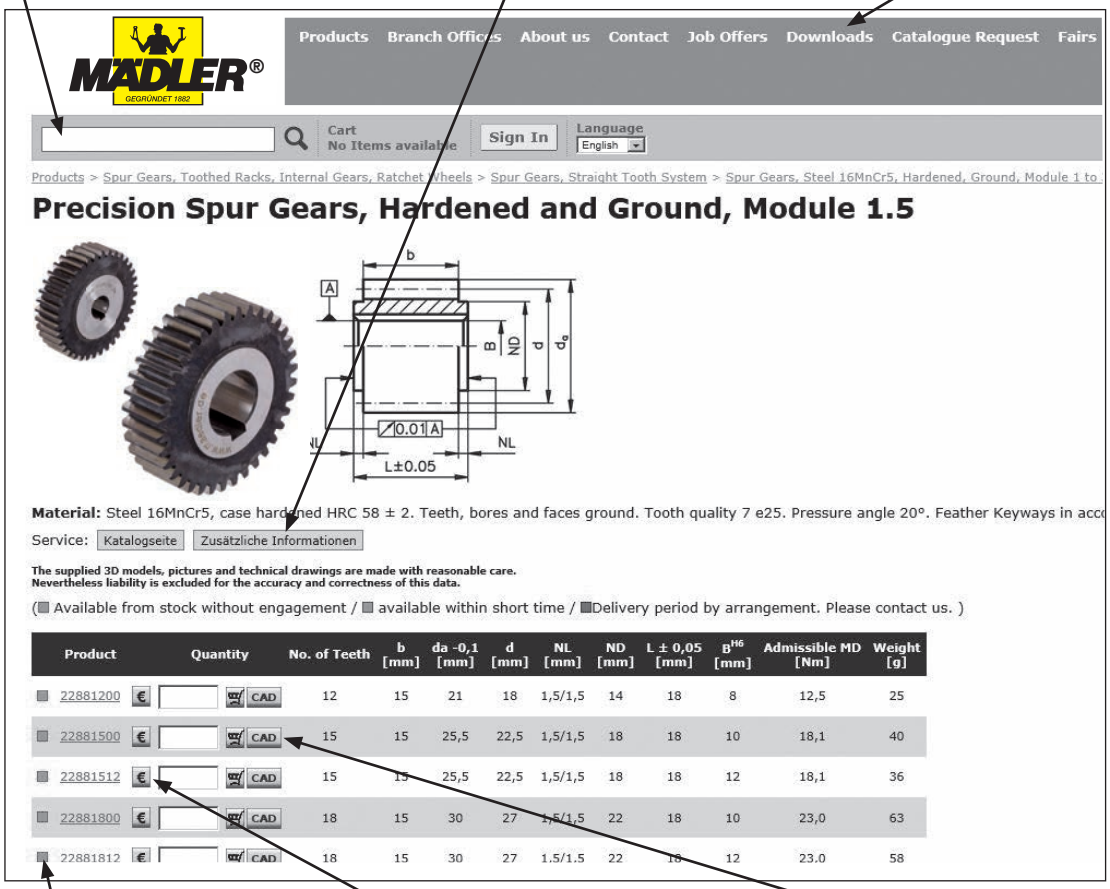

The availability of all products is shown by coloured sign

Drag the mouse onto the currency-symbol to see the prices*

Download CAD-drawings in 3D

A lot of possibilities and information:

- **Download of PDF catalogues in different languages.**
- **See all our branches and distributors.**
- **Make easily your order online and follow your parcel.**
- ***MÄDLER*®-Tools: Use our selection- and calculation tools.**
- **News: Useful information about exhibitions and others.**
- **Newsletter: Monthly information per e-mail.**

Qualitiy Management DIN EN ISO 9001

MÄDLER GmbH maintains a quality management system according to DIN EN ISO 9001 and was certified the first time in 1995.

On the iternet at **www. maedler.de** in the section **Downloads** you find:

- PDF catalogues in several languages.
- Operating instructions.
- Safety data sheets.
- Excel-Pricelist for customers in Germany.
- Certificates of conformity.
- Quality management certificate DIN 9001.
- Certificate AEO.
- Company profile.
- CAD files.

MÄDLER® meets even the highest quality requirements:Top quality, precision and reliability.



General Description
When used properly, high quality roller chains are powerful and reliable drive systems. They can serve to bridge large centre distances. Various transmission ratios can be realized, independently of the centre distance. In Europe mainly roller chains according to DIN ISO 606 (ex DIN 8187) are used.

Selection, Dimensioning and Efficiency
The the performance diagram and the calculation given on page 36 can serve to determine a chain drive with a prospective service life of hours. With proper lubrication the degree of efficiency is approx. 98 %.

Note Regarding the Breaking Load
The DIN ISO 606 (ex DIN 8187) specifies the minimum breaking load for each chain size. When this breaking load is exceeded, the chain is destroyed. Roller chains should be loaded with no more than one sixth of the stated breaking load, to avoid an early plastic deformation (permanent elongation).

Mounting and Maintenance
The shafts must be set in parallel. The sprockets must be aligned. The slack span should amount to approx 1% to max 2% of the centre distance. For this purpose we recommend mounting a chain tensioner.

Large centre distances require a support (guide rail) to be used. Chain drives must always be well lubricated. Lubricants and lubrication methods depend on the specific application.

Determining the Chain Length
The chain length can be stated in meter or mm, or by stating the number of links. In the latter case, inner **and** outer links are counted. The chains are usually delivered open. The last link on both ends is an inner link.
This leads to an uneven number of links.
If a straight connecting ling is used, the closed chain strand has an even number of links. Example of an open chain (without connecting link) with 5 links:

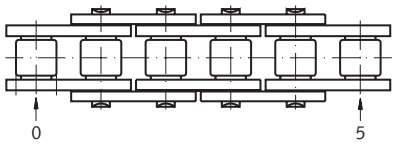

An uneven number of links in a closed strand can only be realized by using a cranked link.
Note: this link reduces the load bearing capacity of the chain by 20%.

Roller Chains in Catalogue Version

Single-Strand (Simplex-) Roller Chains:
Either as standard version made from special, high-quality steel, or lubrication-free, with additional nickel plating, or in stainless steel.

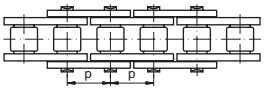

page 37

Single-Strand Chains with Attachments:
In stock as chain with straight and bent attachments, one-sided or two-sided attached to the outer link, as one-whole or two-hole version, with a distance of 2 x p, 4 x p and 6 x p. Other distances available at short notice on request.

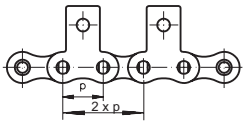

page 46

Double-Strand (Duplex-) Roller Chains:
As standard version made from special, high-quality steel.
The transmission power is 1.75 times higher than single-strand.

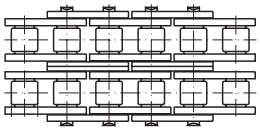

page 43

Triple-Strand (Triplex-) Roller Chains:
As standard version made from special, high-quality steel. The transmission power of this chain is 2.5 times higher than single-strand.

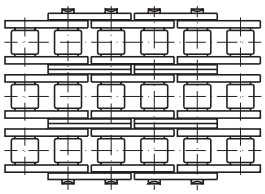

page 45

Sprockets in Catalogue Version

Sprockets for roller chains DIN ISO 606 (ex DIN 8187), with main dimension according to DIN 8192 (tooth profile DIN 8196) as well as various tensioning elements are available in large variety straight from stock. Other sprockets and custom-made products on request.

Overview sprockets: page 60.
Mounting options: page 817.

Dimensioning of Roller-Chain Drives DIN ISO 606 (ex DIN 8187)

Notes Regarding the Calculation

The dimensioning of a roller-chain drive can be worked out using the performance diagram below.
This diagram shows the calculated transmittable power for a service life of 15,000 hours.
The calculated performance is worked out by multiplying the power to be transmitted with the corrective factors stated below.
The performance diagram is non binding. It is based on empirical values and set at optimum conditions. Special operational conditions can shorten the service life of the chain.

Calculation of the Transmittable Power P_B

$P_B = P_N \times K_1 \times K_2 \times K_3 \times K_4$

P_B: Calculated Transmittable Power [kW]

P_N: Input Power [kW]

K_1: Factor Considering the Number of Teeth (Table 1)

K_2: Factor Considering the Transmission (Table 2)

K_3: Factor Considering the Centre Distance (Table 3)

K_4: Factor Considering the Type of Load (Table 4)

Table 1: Corrective Factor K_1 Considering the Number of Teeth of the Smaller Sprocket

Number of Teeth	11	13	15	17	19	21	23	25	31	37
Factor K_1	2.5	2.0	1.75	1.55	1.35	1.2	1.1	1.0	0.78	0.64

Table 2: Corrective Factor K_2 Considering the Transmission Ratio

Transmission Ratio	1 : 1	2 : 1	3 : 1	5 : 1
Factor K_2	1.22	1.08	1	0.92

Table 3: Corrective Factor K_3 Considering the center distance

Center Distance	10 x p	20 x p	40 x p	80 x p
Factor K_3	1,3	1,15	1	0,85

Table 4: Corrective Factor K_4 Considering the Type of Load (Operating Factor)

	Output (Type of Load of Driven Machine)		
Input	Uniform	Medium Shocks	Strong Shocks
Uniform	1.0	1.4	1.8
Light Shocks	1.1	1.5	1.9
Medium Shocks	1.3	1.7	2.1

Performance Diagram: Calculated Transmittable Power P_B

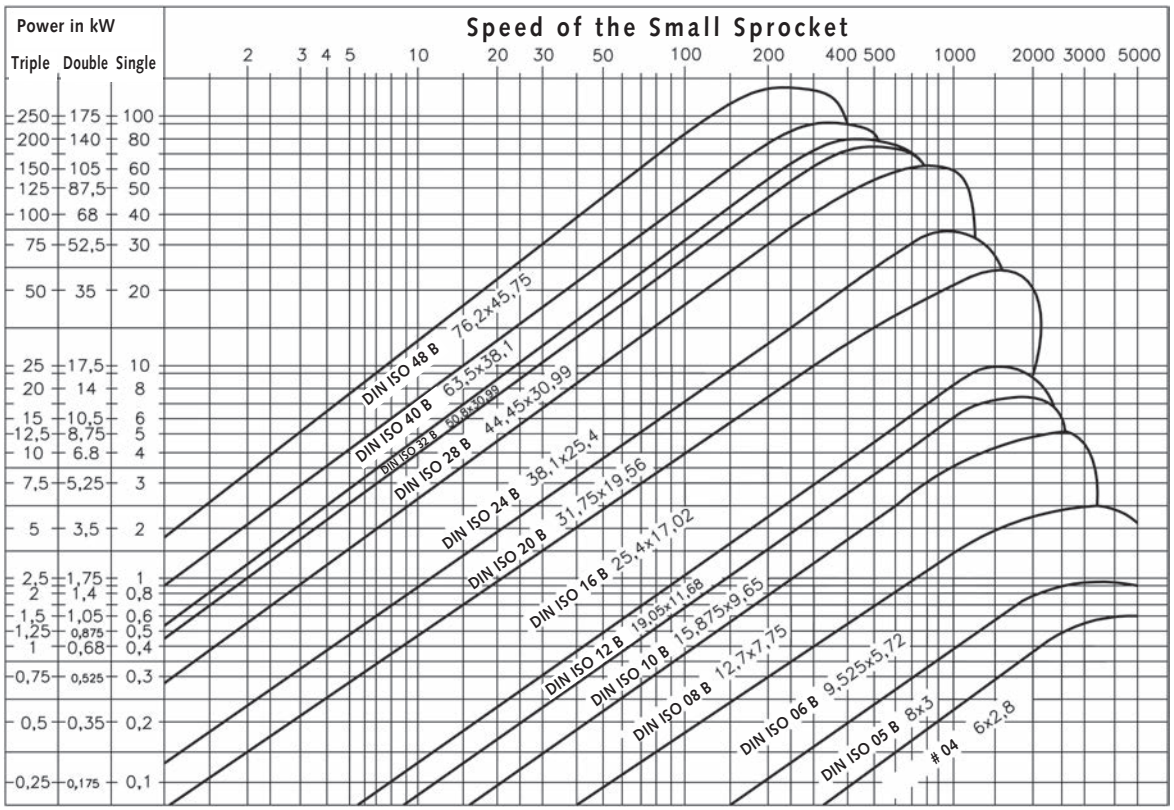

Single-Strand Roller Chains DIN ISO 606 (ex DIN 8187)

Material: Special chain steel.

High-quality simplex roller chains, pre-stretched according to DIN.
Notes regarding the performance calculation on page 36.
Waisted link plates (size 06 with straight link plates).
Chains are supplied with an uneven number of links, with inner links at both ends. Connecting links must be ordered separately.

Temperature range: -20°C to +120°C.
Other temperatures are possible if special grease is used.

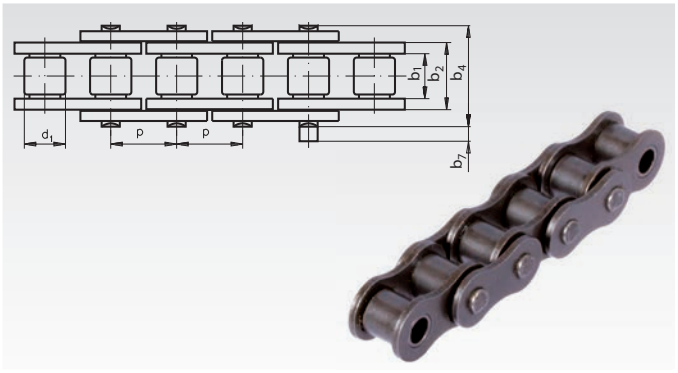

Ordering Details: e.g.: Product No. 100 000 00, Bush Chain, Single Strand, Pitch 4mm

DIN ISO-No.	Product No.	Pitch x Inner Width p x b_{1min} mm			inch	Inner Width b_2 mm	Roller-Ø d_1 mm	Pin Ø mm	Width over Pin b_4 mm	Projection over Link b_7 [4] mm	Breaking Load min. N	Weight kg/m
comp. Stand.[1]	**100 000 00** [1]	4,0	x	2,7	-	4,10	2,50	1,65	7,0	0,9	1800	0,08
03 [2]	**100 300 00** [2]	5,0	x	2,5	-	4,15	3,20	1,49	7,4	2,5	2200	0,10
04 [2]	**100 600 00** [2]	6,0	x	2,8	-	4,10	4,00	1,85	7,4	2,9	3000	0,12
05 B-1	**100 800 00**	8,0	x	3,0	-	4,77	5,00	2,31	8,6	3,1	4400	0,18
06 B-1 [3]	**101 000 00** [3]	9,525	x	5,72	3/8 x 7/32	8,53	6,35	3,28	13,5	3,3	8900	0,41
081	**102 000 00**	12,7	x	3,3	1/2 x 1/8	5,80	7,75	3,66	10,2	1,5	8000	0,28
083	**103 000 00**	12,7	x	4,88	1/2 x 3/16	7,90	7,75	4,09	12,9	1,5	11600	0,42
comp. Stand.	**103 400 00**	12,7	x	4,88	1/2 x 3/16V	9,30	7,75	4,18	14,4	1,5	17500	0,59
08 B-1	**105 000 00**	12,7	x	7,75	1/2 x 5/16	11,30	8,51	4,45	17,0	3,9	17800	0,70
10 B-1	**106 000 00**	15,875	x	9,65	5/8 x 3/8	13,28	10,16	5,08	19,6	4,1	22200	0,95
12 B-1	**107 000 00**	19,05	x	11,68	3/4 x 7/16	15,62	12,07	5,72	22,7	4,6	28900	1,25
16 B-1	**108 000 00**	25,4	x	17,02	1“ x 17,02mm	25,45	15,88	8,28	36,1	5,4	60000	2,60
20 B-1	**109 000 00**	31,75	x	19,56	1 1/4 x 3/4	29,01	19,05	10,19	43,2	6,1	95000	3,70
24 B-1	**110 000 00**	38,1	x	25,4	1 1/2 x 1	37,92	25,40	14,63	53,4	6,6	160000	6,90

[1] Bush Chain (without rollers).
[2] This size is not part of the DIN.
[3] With straight links plates.
[4] Maximum values at the connecting link.

Attention please: Packing Unit 5m
If special lengths are needed, please tell us the length and the number of links (uneven number!). Connecting links have to be ordered separately.

Connecting Links for Single-Strand Roller Chains DIN ISO 606 (ex DIN 8187)

Material: Special chain steels. **Attention please:** Product numbers marked with * are in packing units of 5 pieces.
Ordering Details: e.g.: Product No. 100 303 00, Connecting Link No. 11/E, 03


No. 11/E


No. 12/L


No. 15/C


No. 10/S


No. 4/B

DIN ISO No.	Product No. Connecting Link No. 11/E	Weight g	Product No. Cranked Link No. 12/L [3]	Weight g	Product No. Cranked Double No. 15/C [3]	Weight g	Product No. Connecting Link No. 10/S	Weight g	Product No. Inner Link No. 4/B	Weight g
Company Std.[1]	-		-	-	-	-	**100 002 00**	0,4	-	-
03	**100 303 00**	0,4	-	-	**100 305 00**	0,8	-	-	**100 301 00**	0,5
04	**100 603 00***	0,6	-	-	**100 605 00**	1,4	-	-	**100 601 00**	0,8
05 B-1	**100 803 00***	2	-	-	**100 805 00**	2	-	-	**100 801 00**	1,4
06 B-1	**101 003 00***	4	**101 004 00**	4	**101 005 00**	9	-	-	**101 001 00**	4
081	**102 003 00***	4	**102 004 00**	4	**102 005 00**	8	-	-	**102 001 00**	4
083	**103 003 00***	5	**103 004 00**	6	**103 005 00**	11	-	-	**103 001 00**	5
Company Std.[2]	**103 403 00**	6	**103 404 00**	8	**103 405 00**	14	-	-	**103 401 00**	6
08 B-1	**105 003 00***	9	**105 004 00**	9	**105 005 00**	18	-	-	**105 001 00**	9
10 B-1	**106 003 00***	13	**106 004 00**	15	**106 005 00**	31	**106 002 00**	12	**106 001 00**	16
12 B-1	**107 003 00***	21	**107 004 00**	24	**107 005 00**	48	-	-	**107 001 00**	25
16 B-1	**108 003 00**	66	**108 004 00**	80	**108 005 00**	140	**108 002 00**	64	**108 001 00**	79
20 B-1	**109 003 00**	115	**109 004 00**	145	**109 005 00**	279	**109 002 00**	108	**109 001 00**	129
24 B-1	-	-	**110 004 00**	293	-	-	**110 002 00**	286	**110 001 00**	268

* Delivery in packing units of 5 pieces.
[1] Pitch 4 mm for chain 100 000 00.
[2] Pitch 12.7 mm for chain 103 400 00.
[3] With cranked links power and breaking load are reduced by 20%.

Single-Strand Roller Chains, similar to DIN ISO 606 (ex DIN 8187), with straight plates

Material: Special chain steel.

High-quality simplex roller chains, pre-stretched according to DIN.
Notes regarding the performance calculation on page 36.
With straight link plates, to use as conveyor chain or drive chain.
Chains are supplied with an uneven number of links, with inner links at both ends. Connecting links must be ordered separately.

Temperature range: -20°C to +120°C.
Other temperatures are possible if special grease is used.

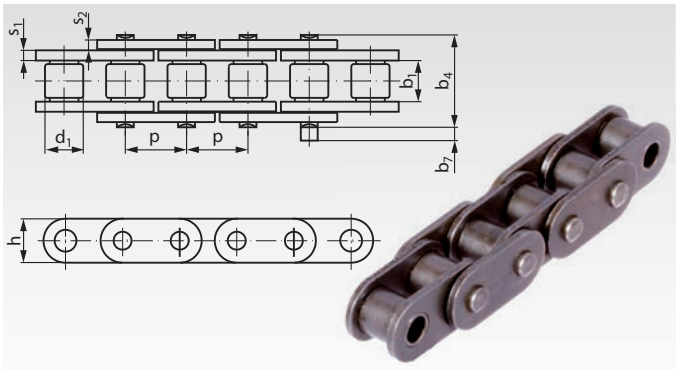

Ordering Details: e.g.: Product No. 105 000 00GL, Roller Chain 08 B-1-GL, with straight plates

DIN ISO-No.	Product No.	Pitch x Inner Width p x b_{1min} mm			inch	Plate Height h max. mm	Plate Thickness s_1/s_2 max. mm	Roller-Ø d_1 mm	Pin Ø mm	Width over Pin b_4 mm	Projection over link b_7 [1] mm	Breaking Load min. N	Weight kg/m
08 B-1-GL	**105 000 00GL**	12,7	x	7,75	1/2 x 5/16	11,8	1,60	8,51	4,45	16,7	1,5	17800	0,80
10 B-1-GL	**106 000 00GL**	15,875	x	9,65	5/8 x 3/8	14,7	1,70	10,16	5,08	19,5	2,4	22200	1,06
12 B-1-GL	**107 000 00GL**	19,05	x	11,68	3/4 x 7/16	16,0	1,85	12,07	5,72	22,5	2,7	28900	1,32
16 B-1-GL	**108 000 00GL**	25,4	x	17,02	1“ x 17,02mm	21,0	4,15/3,1	15,88	8,28	36,1	3,0	60000	3,08
16 B-1-GLH	**108 000 00GLH**	25,4	x	17,02	1“ x 17,02mm	24,0	4,15/3,1	15,88	8,28	36,1	3,0	60000	3,49
20 B-1-GL	**109 000 00GL**	31,75	x	19,56	1 1/4 x 3/4	26,4	4,50/3,5	19,05	10,19	43,2	3,7	95000	4,16

[1] Maximum value at the connecting link.

Attention please: Packing Unit 5m
If special lengths are needed, please tell us the length and the number of links (uneven number!). Connecting links have to be ordered separately.

Connecting Links for Single-Strand Roller Chains similar to DIN ISO 606 (ex DIN 8187), with straight plates

Materials: Special Chain Steel. **Attention please:** Product numbers marked with * are in packing units of 5 pieces.
Ordering Details: e.g.: Product No. 105 003 00GL, Connecting Link No.11/E, 08 B-1-GL with straight plates


No. 11/E


No. 12/L


No. 4/B

DIN ISO No.	Product No. Connect. Link No. 11/E	Weight g	Product No. Cranked No. 12/L [1]	Weight g	Product No. Inner Link No. 4/B	Weight g
08 B-1-GL	**105 003 00GL***	10	**105 004 00**	9	**105 001 00GL**	10
10 B-1-GL	**106 003 00GL***	17	**106 004 00**	15	**106 001 00GL**	18
12 B-1-GL	**107 003 00GL***	23	**107 004 00**	24	**107 001 00GL**	28
16 B-1-GL	**108 003 00GL**[2]	72	**108 004 00**	80	**108 001 00GL**	83
16 B-1-GLH	**108 003 00GLH**[2]	78	-	-	**108 001 00GLH**	93
20 B-1-GL	**109 003 00GL** [2]	126	**109 004 00**	145	**109 001 00GL**	141

[1] With cranked links power and breaking loads are reduced by 20%.
[2] With cottered pin.

* Delivery in packing units of 5 pieces.

Single-Strand Roller Chains, similar to DIN ISO 606 (ex DIN 8187), Self-Lubricating

Materials: Special Chain Steel, Sintered Bronze Bushes.

Self-Lubricating Single-Strand Roller Chain, Dimensions and Pre-stretching according to DIN ISO 606 (ex DIN 8187).
Waisted Link Plates.
Chains are supplied with an uneven number of links, with inner links at both ends. Connecting links must be ordered separately.

Temperature range: -10° to +120°C.

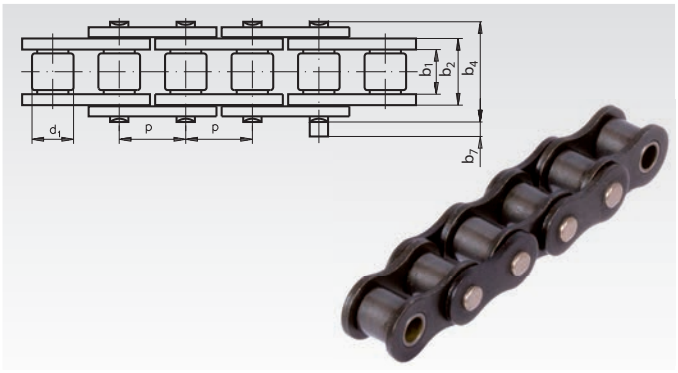

Ordering Details: e.g.: Product No. 105 770 00, Roller Chain 08 B-1 self-lubricating

DIN ISO-No.	Product No.	Pitch x Inner Width p x b_{1min} mm			inch	Inner Width b_2 mm	Roller-Ø d_1 mm	Pin Ø mm	Width over Pin b_4 mm	Projection over Link b_7 [1] mm	Breaking Load min. N	Weight kg/m
08 B-1	**105 770 00**	12,7	x	7,75	1/2 x 5/16	11,30	8,51	4,45	17,0	3,9	17800	0,69
10 B-1	**106 770 00**	15,875	x	9,65	5/8 x 3/8	13,28	10,16	5,08	19,6	4,1	22200	0,93
12 B-1	**107 770 00**	19,05	x	11,68	3/4 x 7/16	15,62	12,07	5,72	22,7	4,6	28900	1,15
16 B-1	**108 770 00**	25,4	x	17,02	1“ x 17,02mm	25,45	15,88	8,28	36,1	5,4	60000	2,71

[1] Maximum value at the connecting link.

Attention please: Packing Unit 5m
If special lengths are needed, please tell us the length and the number of links (uneven number!). Connecting links have to be ordered separately.

Connecting Links for Self-Lubricating, Single-Strand Roller Chains, similar to DIN ISO 606 (ex DIN 8187)

Materials: Special Chain Steel, Coated Pins.

Ordering Details: e.g.: Product No. 105 773 00, Connecting Link No.11/E, 08 B-1


No. 11/E


No. 12/L


No. 4/B

DIN ISO No.	Product No. Connect. Link No. 11/E	Weight g	Product No. Cranked No. 12/L [1]	Weight g	Product No. Inner Link No. 4/B	Weight g
08 B-1	**105 770 03**	9	**105 770 04**	9	**105 770 01**	9
10 B-1	**106 770 03**	13	**106 770 04**	15	**106 770 01**	16
12 B-1	**107 770 03**	21	**107 770 04**	24	**107 770 01**	25
16 B-1	**108 770 03** [2]	66	**108 770 04**	80	**108 770 01**	79

[1] With cranked links power and breaking loads are reduced by 20%.
[2] With cottered pin.

Single-Strand Roller Chains, similar to DIN ISO 606 (ex DIN 8187), Nickel Plated

Material: Special Chain Steel, Nickel Plated.

High quality single-strand roller chains with good corrosion resistance.
Dimensions and Pre-stretching according to DIN ISO 606 (ex DIN 8187).
Notes regarding the performance calculation are on page 36.
Wasted Link Plates (size 06 with straight link plates).
Chains are supplied with an uneven number of links, with inner links at both ends. Connecting links must be ordered separately.

Temperature range: -10°C to +120°C.
Other temperatures are possible if special grease is used.

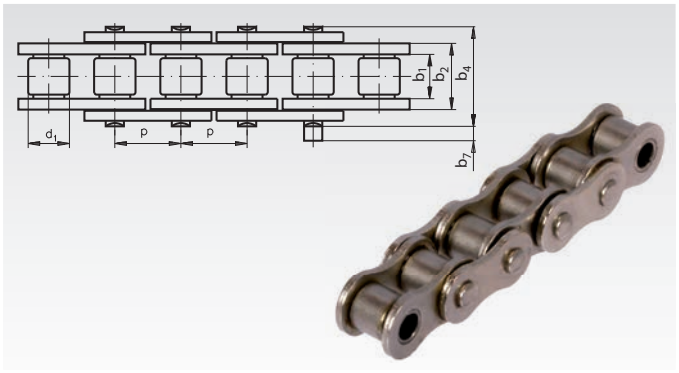

Ordering Details: e.g.: Product No. 100 668 00, Roller Chain 05 B-1, nickel plated

DIN ISO-No.	Product No. Nickel plated	Pitch x Inner Width $p \times b_{1min}$ mm		inch	Inner Width b_2 mm	Roller-Ø d_1 mm	Pin Ø mm	Width over Pin b_4 mm	Projection over Link b_7 [2] mm	Breaking Load min. N	Weight kg/m
05 B-1	**100 668 00**	8,0 x 3,0		-	4,77	5,00	2,31	8,6	3,1	4400	0,20
06 B-1 [1]	**101 660 00** [1]	9,525 x 5,72		3/8 x 7/32	8,53	6,35	3,28	13,5	3,3	8900	0,41
08 B-1	**105 660 00**	12,7 x 7,75		1/2 x 5/16	11,30	8,51	4,45	17,0	3,9	17800	0,69
10 B-1	**106 660 00**	15,875 x 9,65		5/8 x 3/8	13,28	10,16	5,08	19,6	4,1	22200	0,93
12 B-1	**107 660 00**	19,05 x 11,68		3/4 x 7/16	15,62	12,07	5,72	22,7	4,6	28900	1,15
16 B-1	**108 660 00**	25,4 x 17,02		1" x 17,02mm	25,45	15,88	8,28	36,1	5,4	60000	2,71
20 B-1	**109 660 00**	31,75 x 19,56		1 1/4 x 3/4	29,01	19,05	10,19	43,2	6,1	95000	3,70
24 B-1	**110 660 00**	38,1 x 25,4		1 1/2 x 1	37,92	25,40	14,63	53,4	6,6	160000	7,10

[1] With straight link plates.
[2] Maximum values at the connecting link.

Attention please: Packing Unit 5m
If special lengths are needed, please tell us the length and the number of links (uneven number!). Connecting links have to be ordered separately.

Connecting Links for Single-Strand Roller Chains, similar to DIN ISO 606 (ex DIN 8187), Nickel Plated

Material: Special Chain Steel, Nickel Plated. **Attention please:** Product numbers marked with * are in packing units of 5 pieces.

Ordering Details: e.g.: Product No. 100 668 03, Connecting Link No.11/E, 05 B-1, nickel plated



No. 11/E: Connecting link with spring clip



No. 12/L: Cranked link with cottered pin



No. 4/B: Inner Link

DIN ISO No.	Product No. Connecting Link No. 11/E	Weight g	Product No. Cranked No. 12/L [1]	Weight g	Product No. Inner Link No. 4/B	Weight g
05 B-1	**100 668 03***	2	**100 668 04**	1,4	**100 668 01**	1,5
06 B-1	**101 660 03***	4	**101 660 04**	4	**101 660 01**	4
08 B-1	**105 660 03***	7	**105 660 04**	10	**105 660 01**	9
10 B-1	**106 660 03**	13	**106 660 04**	15	**106 660 01**	16
12 B-1	**107 660 03**	14	**107 660 04**	25	**107 660 01**	26
16 B-1	**108 660 03**	65	**108 660 04**	81	**108 660 01**	72
20 B-1	**109 660 03**	115	**109 660 04**	145	**109 660 01**	129
24 B-1	**110 660 03** [2]	286	**110 660 04**	293	**110 660 01**	268

[1] With cranked links power and breaking loads are reduced by 20%.
[2] With cottered pin.

* Delivery in packing units of 5 pieces.

Chains KE and KE-Eco, similar to DIN ISO 606 (ex DIN 8187), Plastic with Stainless Steel

Material and type:
Type KE: Inner links made from special polycarbonate with high chemical resistance, for food industry or laboratory. Outer links from stainless steel 1.4301.
Type KE-Eco: Similar to KE, but inner links from standard polycarbonate, with lower chemical resistance.

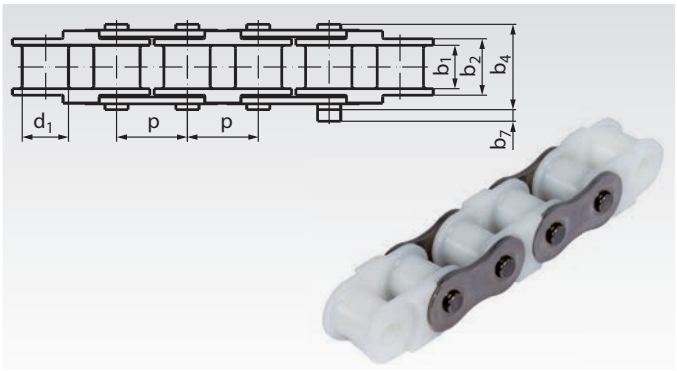

Main dimensions according to DIN ISO 606 (ex DIN 8187).
- Very light and silent running.
- Very clean due to closed surfaces on the inner link.
- High corrosion resistance.
- Long lifetime, without any lubrication.
- Breaking load significantly higher than pure plastic chains.
- Temperature range -10°C to +80°C. V_{max} 70m/min.

Chains are supplied with an uneven number of links, ending with inner links. Connecting links must be ordered separately.

Ordering Details: e.g.: Product No. 101 550 00, Chain KE 06 B-1

DIN ISO	Product No. Type KE	Product No. Type KE-Eco	Pitch x Inner Width $p \times b_{1min}$ mm		Zoll	Inner Width b_2 mm	Roller-Ø d_1 mm	Pin Ø mm	Width over Pin b_4 mm	Projection b_7 [2] mm	Calculated Load max. [3] N	Weight kg/m
06 B-1 [1]	**101 550 00** [1]	**101 560 00** [1]	9,525 x 5,72		3/8 x 7/32	8,53	6,35	3,28	13,5	3,3	200	0,23
08 B-1	**105 550 00**	**105 560 00**	12,7 x 7,75		1/2 x 5/16	11,30	8,51	4,45	17,0	3,9	430	0,40
10 B-1	**106 550 00**	**106 560 00**	15,875 x 9,65		5/8 x 3/8	13,28	10,16	5,08	19,6	4,1	520	0,51
12 B-1	**107 550 00**	**107 560 00**	19,05 x 11,68		3/4 x 7/16	15,62	12,07	5,72	22,7	4,6	700	0,67
16 B-1	-	**108 560 00**	25,4 x 17,02		1“ x 17,02mm	25,45	15,88	8,28	35,4	5,4	930	1,39

[1] With straight link plates.
[2] Maximum value at the connecting link.
[3] See calculation factors below.

Attention please: Packing Unit 5m
If special lengths are needed, please tell us the length and the number of links (uneven number!). Connecting links have to be ordered separately.

Connecting links for chains KE and KE-Eco

Material: Stainless steel 1.4301.

Ordering Details: e.g.: Product No. 101 990 03, Connecting Link No.11/E, 06 B-1, stainless



No. 11/E: Connecting link with spring clip

DIN ISO No.	Product No. Connecting Link No. 11/E	Weight g
06 B-1	**101 990 03**	4
08 B-1	**105 990 03**	7
10 B-1	**106 990 03**	13
12 B-1	**107 990 03**	14
16 B-1	**108 990 03**	65

Load calculation factors for Chains KE and KE-Eco

The actual load is to be calculated with the following factors. The result may not be greater than the allowed calculated load.

1. Shock load: Usual factors see page 36

2. Number of sprocket teeth:
9 - 14 teeth: Factor 1.16
15 - 23 teeth: Factor 1.12
24 - 37 teeth: Factor 1.08
38 - 59 teeth: Factor 1.04
Above 60 teeth: Factor 1.00

3. Chain speed:
0 to 15m/min: Factor 1.0
16 to 30m/min: Factor 1.2
31 to 50m/min: Factor 1.4
51 to 70m/min: Factor 1.6

Resistance of KE-Chains

Resistant against:
Acetone, alcohol, ammonia water, malic acid (50%), petrol, benzene, butyric acid, acetic acid, formaldehyde, glycerine, caustic potash, potassium nitrate, lactic acid (10%), sodium chloride, sodium bicarbonate, oils (plant / mineral), paraffin, petroleum, juices, hydrogen sulphide (dry), tartaric acid (10%), sugar solutions etc.
Tested at 20°C, without any guarantee about secondary effects.

Not resistant against:
Chlorine gas, chromic acid, iodine, phosphoric acid, carbolic acid, nitric acid, hydrochloric acid, ozone, sulphuric acid, hydrogen sulphide (wet), stearic acid etc.

Single-Strand Roller Chains Similar to DIN ISO 606 (ex DIN 8187), Stainless Steel

Material: Stainless steel 1.4301.

STAINLESS

Simplex roller chains with good chemical resistance.
Main dimensions according to DIN ISO 606 (ex DIN 8187). Due to the material properties, the stated transmittable power and breaking load are below the value for the standard chains. The application should use no more than one sixth of the braking load stated.
Not pre-stretched, not lubricated. The chains must be lubricated according to the type of application. Waisted link plates (size 06 with straight link plates).
Chains are supplied with an uneven number of links, with inner links at both ends. Connecting links have to be ordered separately.

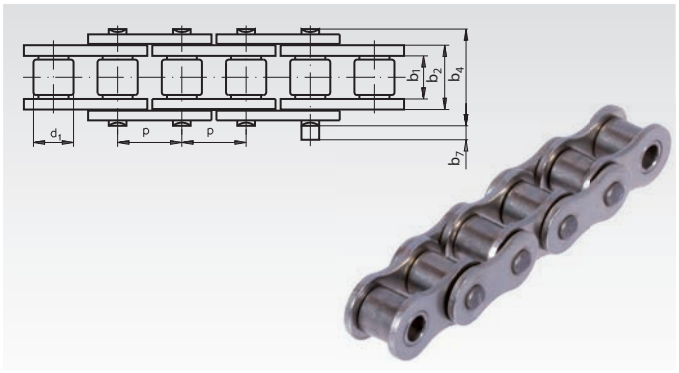

Ordering Details: e.g.: Product No. 100 996 00, Roller Chain 04, Stainless Steel

DIN ISO-No.	Product No. Stainless	Pitch x Inner Width p x b_{1min} mm			inch	Inner Width b_2 mm	Roller-Ø d_1 mm	Pin Ø mm	Width over Pin b_4 mm	Projection over Link b_7 [3] mm	Breaking Load min. N	Weight kg/m
04 [1]	**100 996 00** [1]	6,0	x	2,8	-	4,10	4,00	1,85	7,4	2,9	2000	0,12
05 B-1	**100 998 00**	8,0	x	3,0	-	4,77	5,00	2,31	8,6	3,1	3500	0,18
06 B-1 [2]	**101 990 00** [2]	9,525	x	5,72	3/8 x 7/32	8,53	6,35	3,28	13,5	3,3	6200	0,41
083	**103 990 00**	12,7	x	4,88	1/2 x 3/16	7,90	7,75	4,09	12,9	1,5	7000	0,42
08 B-1	**105 990 00**	12,7	x	7,75	1/2 x 5/16	11,30	8,51	4,45	17,0	3,9	12000	0,70
10 B-1	**106 990 00**	15,875	x	9,65	5/8 x 3/8	13,28	10,16	5,08	19,6	4,1	14500	0,95
12 B-1	**107 990 00**	19,05	x	11,68	3/4 x 7/16	15,62	12,07	5,72	22,7	4,6	18500	1,25
16 B-1	**108 990 00**	25,4	x	17,02	1“ x 17,02mm	25,45	15,88	8,28	36,1	5,4	40000	2,60

[1] This size is not part of the DIN.
[2] With straight link plates.
[3] Maximum values at the connecting link.

Attention please: Packing Unit 5m
If special lengths are needed, please tell us the length and the number of links (uneven number!). Connecting links have to be ordered separately.

Connecting Links for Single-Strand Roller Chains Similar to DIN ISO 606 (ex DIN 8187), Stainless Steel

Material: Stainless steel 1.4301.

Ordering Details: e.g.: Product No. 100 996 03, Connecting Link No. 11/E, 04, Stainless Steel

STAINLESS



No. 11/E: Connecting Link with Spring Clip



No. 12/L: Cranked Link with Cottered Pin



No. 4/B: Inner Link

DIN ISO No.	Product No. Connecting Link No. 11/E	Weight g	Product No. Cranked No. 12/L [1]	Weight g	Product No. Inner Link No. 4/B	Weight g
04	**100 996 03**	0,6	**-**	-	**100 996 01**	0,8
05 B-1	**100 998 03**	2	**100 998 04**	1,4	**100 998 01**	1,5
06 B-1	**101 990 03**	4	**101 990 04**	4	**101 990 01**	4
083	**103 990 03**	4	**103 990 04** [2]	4	**103 990 01**	5
08 B-1	**105 990 03**	7	**105 990 04**	10	**105 990 01**	9
10 B-1	**106 990 03**	13	**106 990 04**	15	**106 990 01**	16
12 B-1	**107 990 03**	14	**107 990 04**	25	**107 990 01**	26
16 B-1	**108 990 03**	65	**108 990 04**	81	**108 990 01**	72

[1] With cranked links, power and breaking load are reduced by 20%.
[2] Only with riveted bolts.

Double-Strand Roller Chains DIN ISO 606 (ex DIN 8187)

Material: Special chain steels.

High-quality duplex roller chains, pre-stretched according to DIN.
Notes regarding the performance calculation on page 36.
Waisted link plates (size 06 with straight link plates).
Chains are supplied with an uneven number of links, with inner links at both ends. Connecting links must be ordered separately.

Temperature range: -20°C to +120°C.
Other temperatures are possible if special grease is used.

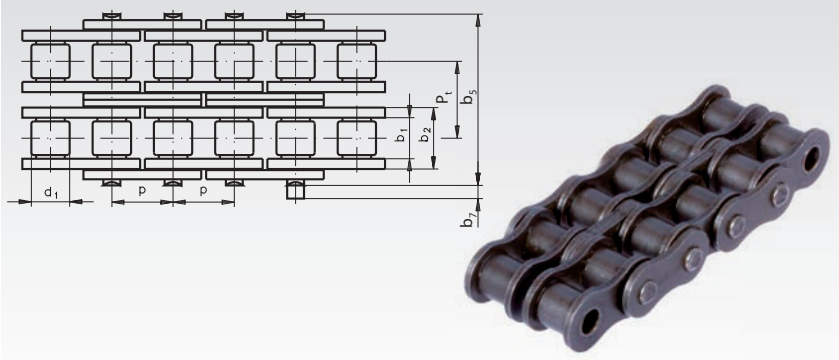

Ordering Details: e.g.: Product No. 120 000 00, Double-Strand Roller Chain, 05 B-2

DIN ISO-No.	Product No.	Pitch x Inner Width $p \times b_{1min}$ mm			inch	Inner Link Width b_2 mm	Roller-Ø d_1 mm	Width b_5 mm	Transverse Pitch P_t mm	Projection b_7 [2] mm	Breaking Load min. N	Weight kg/m
05 B-2	**120 000 00**	8,0	x	3,0	-	4,77	5,00	14,3	5,64	3,1	7800	0,36
06 B-2 [1]	**121 000 00** [1]	9,525	x	5,72	3/8 x 7/32	8,53	6,35	23,8	10,24	3,3	16900	0,78
08 B-2	**125 000 00**	12,7	x	7,75	1/2 x 5/16	11,30	8,51	31,0	13,92	3,9	31100	1,36
10 B-2	**126 000 00**	15,875	x	9,65	5/8 x 3/8	13,28	10,16	36,2	16,59	4,1	44500	1,82
12 B-2	**127 000 00**	19,05	x	11,68	3/4 x 7/16	15,62	12,07	42,2	19,46	4,6	57800	2,38
16 B-2	**128 000 00**	25,4	x	17,02	1“ x 17,02mm	25,45	15,88	68,0	31,88	5,4	106000	5,40
20 B-2	**129 000 00**	31,75	x	19,56	1 1/4 x 3/4	29,01	19,05	79,7	36,45	6,1	170000	7,20
24 B-2	**129 500 00**	38,1	x	25,4	1 1/2 x 1	37,92	25,40	101,8	48,36	6,6	280000	13,50

[1] With straight link plates.
[2] Maximum values at the link.

Attention please: Packing Unit 5m
If special lengths are needed, please tell us the length and the number of links (uneven number!). Connecting links have to be ordered separately.

Connecting Links for Double-Strand Roller Chains DIN ISO 606 (ex DIN 8187)

Material: Special chain steels.



No. 11/E: Connecting Link with Spring Clip
Nr. 10/S: Connecting Link with Cottered Pin



No. 12/L: Cranked Link with Cottered Pin



No. 15/C: Cranked Double Link



No. 4/B: Inner Link (2 pieces required)

Details: e.g.:
Product No. 120 003 00,
Connecting Link No. 11/E, 05 B-2

DIN ISO No.	Product No. Conn. Link No. 11/E	Product No. Conn. Link No. 10/S	Weight g	Product No. Cranked Link No. 12/L [1]	Weight g	Product No. Crkd. Double No. 15/C [1]	Weight g	Product No. Inner Link No. 4/B [2]	Weight g
05 B-2	**120 003 00**	-	2	-	-	**120 005 00**	6	**100 801 00**	1,4
06 B-2	**121 003 00**	-	7	**121 004 00**	7	**121 005 00**	15	**101 001 00**	4
08 B-2	**125 003 00**	-	17	**125 004 00**	18	**125 005 00**	38	**105 001 00**	9
10 B-2	**126 003 00**	-	24	**126 004 00**	30	**126 005 00**	62	**106 001 00**	16
12 B-2	**127 003 00**	-	39	**127 004 00**	47	**127 005 00**	99	**107 001 00**	25
16 B-2	**128 003 00**	-	122	**128 004 00**	137	**128 005 00**	183	**108 001 00**	79
20 B-2	-	**129 002 00**	163	**129 004 00**	183	-	-	**109 001 00**	129
24 B-2	-	**129 502 00**	305	**129 504 00**	343	-	-	**110 001 00**	268

[1] With cranked links, power and breaking load are reduced by 20%.
[2] 2 pieces required.

Double-Strand Roller Chains Similar to DIN ISO 606 (ex DIN 8187), with Straight Plates

Material: Special chain steels.

High-quality duplex roller chains, pre-stretched according to DIN.
Notes regarding the performance calculation on page 36.
With straight link plates, to use as conveyor chain or drive chain.
Chains are supplied with an uneven number of links, with inner links at both ends. Connecting links must be ordered separately.

Temperature range: -20°C to +120°C.
Other temperatures are possible if special grease is used.

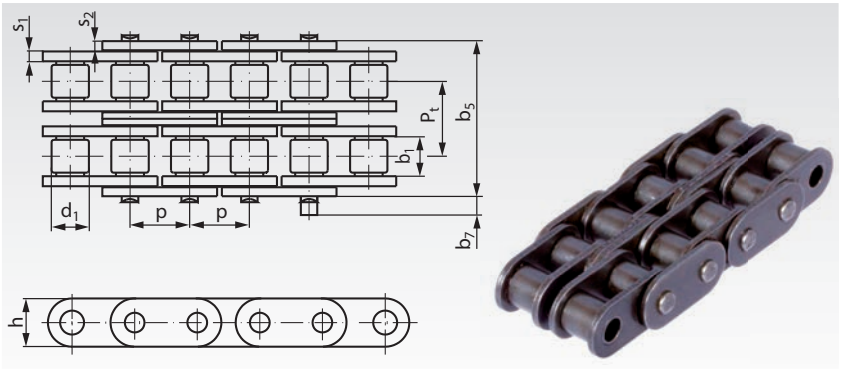

Ordering Details: e.g.: Product No. 125 000 00GL,
Double-Strand Roller Chain, 08 B-2-GL, with straight plates

DIN ISO-No.	Product No.	Pitch x Inner Width p x b_{1min} mm			inch	Plate Height h max. mm	Plate Thickness s_1/s_2 max. mm	Roller-Ø d_1 mm	Width over Pin b_5 mm	Transv. Pitch P_t mm	Projection over link b_7 [1] mm	Breaking Load min. N	Weight kg/m
08 B-2-GL	**125 000 00GL**	12,7	x	7,75	1/2 x 5/16	11,8	1,6	8,51	31,2	13,92	3,9	31100	1,45
10 B-2-GL	**126 000 00GL**	15,875	x	9,65	5/8 x 3/8	14,7	1,7	10,16	36,1	16,59	4,1	44500	2,00
12 B-2-GL	**127 000 00GL**	19,05	x	11,68	3/4 x 7/16	16,0	1,85	12,07	42,0	19,46	4,6	57800	2,62
16 B-2-GL	**128 000 00GL**	25,4	x	17,02	1" x 17,02mm	21,0	4,15/3,1	15,88	68,0	31,88	5,4	106000	6,10
16 B-2-GLH	**128 000 00GLH**	25,4	x	17,02	1" x 17,02mm	24,0	4,15/3,1	15,88	68,0	31,88	5,4	106000	6,90
20 B-2-GL	**129 000 00GL**	31,75	x	19,56	1 1/4 x 3/4	26,4	4,50/3,5	19,05	79,7	36,45	6,1	170000	8,23

[1] Maximum values at the link.

Attention please: Packing Unit 5m
If special lengths are needed, please tell us the length and the number of links (uneven number!). Connecting links have to be ordered separately.

Connecting Links for Double-Strand Roller Chains Similar to DIN ISO 606 (ex DIN 8187), with Straight Plates

Material: Special chain steels.

Details: e.g.:
Product No. 125 003 00GL,
Connecting Link No. 11/E, 08 B-2-GL



No. 11/E: Connecting Link with Spring Clip



No. 12/L: Cranked Link with Cottered Pin



No. 4/B: Inner Link (2 pieces required)

DIN ISO No.	Product No. Conn. Link No. 11/E	Weight g	Product No. Cranked Link No. 12/L [1]	Weight g	Product No. Inner Link No. 4/B [2]	Weight g
08 B-2-GL	**125 003 00GL**	19	**125 004 00**	18	**105 001 00GL**	10
10 B-2-GL	**126 003 00GL**	31	**126 004 00**	30	**106 001 00GL**	18
12 B-2-GL	**127 003 00GL**	44	**127 004 00**	47	**107 001 00GL**	28
16 B-2-GL	**128 003 00GL**	135	**128 004 00**	137	**108 001 00GL**	83
16 B-2-GLH	**128 003 00GLH**	154	**-**	-	**108 001 00GLH**	93
20 B-2-GL [3]	**129 003 00GL**	235	**129 004 00**	343	**109 001 00GL**	141

[1] With cranked links, power and breaking loads are reduced by 20%.
[2] 2 pieces required.
[3] With cottered pin.

Triple-Strand Roller Chains DIN ISO 606 (ex DIN 8187)

Material: Special chain steels.

High-quality triplex roller chains, pre-stretched according to DIN. Notes regarding the performance calculation on page 36.
Waisted link plates (size 06 with straight link plates).
Chains are supplied with an uneven number of links, with inner links at both ends. Connecting links must be ordered separately.

Temperature range: -20°C to +120°C.
Other temperatures are possible if special grease is used.

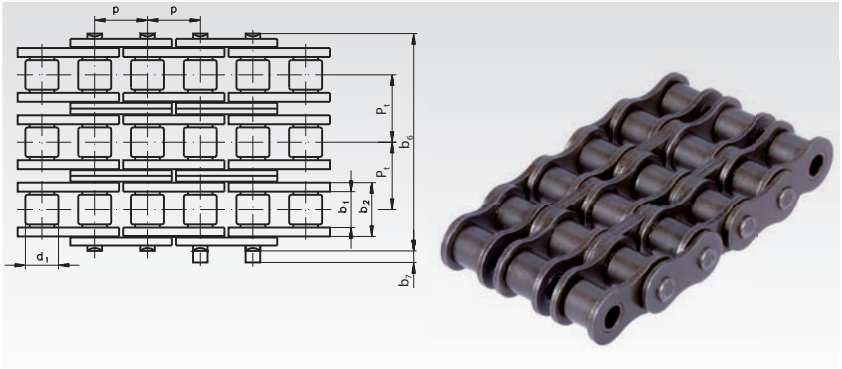

Ordering Details: e.g.: Product No. 131 000 00, Triple-Strand Roller Chain, 06 B-3

DIN ISO-No.	Product No.	Pitch x Inner Width p x b_{1min} mm			inch	Inner Link Width b_2 mm	Roller-Ø d_1 mm	Width b_6 mm	Transverse Pitch P_t mm	Projection b_7 [2] mm	Breaking Load min. N	Weight kg/m
06 B-3 [1]	**131 000 00** [1]	9,525	x	5,72	3/8 x 7/32	8,53	6,35	34,4	10,24	3,3	24900	1,18
08 B-3	**135 000 00**	12,7	x	7,75	1/2 x 5/16	11,30	8,51	44,9	13,92	3,9	44500	2,0
10 B-3	**136 000 00**	15,875	x	9,65	5/8 x 3/8	13,28	10,16	52,8	16,59	4,1	66700	2,8
12 B-3	**137 000 00**	19,05	x	11,68	3/4 x 7/16	15,62	12,07	61,7	19,46	4,6	86700	3,8
16 B-3	**138 000 00**	25,4	x	17,02	1" x 17,02mm	25,45	15,88	99,9	31,88	5,4	160000	8,0

[1] With straight link plates.
[2] Maximum values at the connecting link.

Attention please: Packing Unit 5m
If special lengths are needed, please tell us the length and the number of links (uneven number!). Connecting links have to be ordered separately.

Connecting Links for Triple-Strand Roller Chains DIN ISO 606 (ex DIN 8187)

Material:
Special chain steels.



No. 11/E: Connecting Link with Spring Clip



No. 12/L: Cranked Link with Cottered Pin



No. 4/B: Inner Link (3 Pieces Required)

Ordering Details: e.g.: Product No. 131 003 00, Connecting Link No. 11/E, 06 B-3

DIN ISO No.	Product No. Connecting Link No. 11/E	Weight g	Product No. Crkd.. Link No. 12/L [1]	Weight g	Product No. Inner Link No. 4/B [2]	Weight g
06 B-3	**131 003 00**	9	**131 004 00**	11	**101 001 00**	4
08 B-3	**135 003 00**	26	**135 004 00**	27	**105 001 00**	9
10 B-3	**136 003 00**	36	**136 004 00**	45	**106 001 00**	16
12 B-3	**137 003 00**	60	**137 004 00**	71	**107 001 00**	25
16 B-3	**138 003 00**	183	**138 004 00**	210	**108 001 00**	79

[1] With cranked links, power and breaking load are reduced by 20%.

[2] 3 pieces required.

Roller Chains with Straight Attachments DIN ISO 606 (ex DIN 8187-2), M1, 2 x p

Attachment distance 2 x p
(attachment at every outer link),
either one-sided or two-sided.

Other attachment distances can be supplied at short notice.
Different attachment sizes and special chains on request.

Connecting links M1 have to be ordered separately (see below).



Ordering Details, e.g., Product No.: 101 000 31, Straight Attachments-Roller Chain 06 B-1-M1, One-Sided on the Outer Link, Distance 2xp

M1 = Slim Version, 1 Mounting Hole

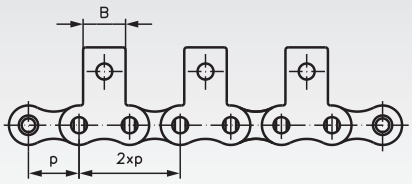

Straight Attachments, M1, 1 Mounting Hole

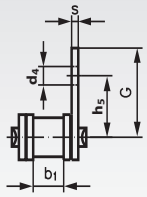

One-Sided

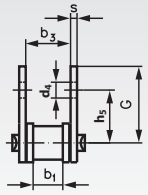

Two- Sided

DIN ISO No.	Product No. One-Sided 2 x p	Product No. Two-Sided 2 x p	Pitch x Inner Width p x b_1 inch	Pitch p mm	Inner Width b_1 min. mm	h_5 mm	G* mm	d_4 mm	B* mm	s min* mm	$b_3$min. mm	Weight* 1-Sided kg/m	Weight* 2-Sided kg/m
06 B-1**	**101 000 31**	**101 000 32**	3/8 x 7/32"	9,525	5,72	9,5	13,5	3,5	8,0	1,2	8,66	0,45	0,49
08 B-1	**105 000 31**	**105 000 32**	1/2 x 5/16"	12,7	7,75	13,0	17,9	4,5	9,5	1,6	11,43	0,75	0,81
10 B-1	**106 000 31**	**106 000 32**	5/8 x 3/8"	15,875	9,65	16,5	21,9	5,5	14,3	1,7	13,41	1,02	1,12
12 B-1	**107 000 31**	**107 000 32**	3/4 x 7/16"	19,05	11,68	21,0	26,6	6,6	16,0	1,8	15,75	1,28	1,41
16 B-1	**108 000 31**	**108 000 32**	1"x17,02mm	25,4	17,02	23,0	31,8	6,6	19,1	2,8	25,6	2,93	3,14

* The marked dimensions are not listed in the DIN and may vary a little.
Attachments with dimensions according to company standard are still available on request.
** This size is not listed in the DIN.

Attention please: Packing Unit 5m
If special lengths are needed, please tell us the length and the number of links (uneven number!).
Connecting links have to be ordered separately.

Connecting links M1 with spring clip, with Straight Attachments DIN ISO 606 (ex DIN 8187-2)

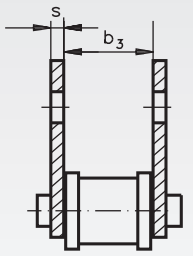

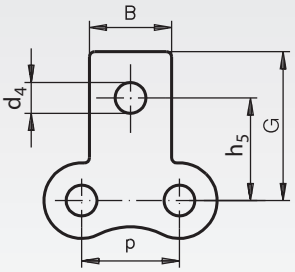


One-Sided


Two-Sided

Ordering Details, e.g., Product No. 101 003 31, Connecting Link M1, one-sided

M1 = Slim Version, 1 Mounting Hole

DIN ISO	Product No. One-Sided	Product No. Two-Sided	p mm	h_5 mm	G* mm	d_4 mm	B* mm	s min.* mm	b_3 min. mm	Weight* 1-Sided g	Weight* 2-Sided g
06 B-1**	**101 003 31**	**101 003 32**	9,525	9,5	13,5	3,5	8,0	1,2	8,66	5	5,6
08 B-1	**105 003 31**	**105 003 32**	12,7	13,0	17,9	4,5	9,5	1,6	11,43	11,5	13,9
10 B-1	**106 003 31**	**106 003 32**	15,875	16,5	21,9	5,5	14,3	1,7	13,41	18,1	21,2
12 B-1	**107 003 31**	**107 003 32**	19,05	21,0	26,6	6,6	16,0	1,8	15,75	24	28
16 B-1	**108 003 31**	**108 003 32**	25,4	23,0	31,80	6,6	19,1	2,8	25,6	78	89

* The marked dimensions are not listed in the DIN and may vary a little.
** This size is not listed in the DIN.

Roller Chains with Straight Attachments DIN ISO 606 (ex DIN 8187-2), M1, 4 x p

Attachment distance 4 x p
(attachment at every second outer link),
either one-sided or two-sided.

Other attachment distances can be supplied at short notice.
Different attachment sizes and special chains on request.

Connecting links (e.g. no.11/E) have to be ordered separately
(see page 37).

Ordering Details, e.g., Product No.: 101 000 33, Straight Attachments-Roller Chain 06 B-1-M1, One-Sided on the Outer Link, Distance 4 x p



M1 = Slim Version, 1 Mounting Hole

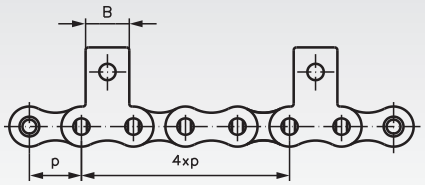

Straight Attachments, M1, 1 Mounting Hole

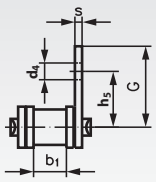

One-Sided

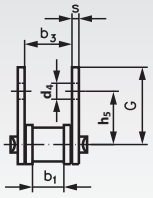

Two-Sided

DIN ISO No.	Product No. One-Sided 4 x p	Product No. Two-Sided 4 x p	Pitch x Inner Width p x b_1 inch	Pitch p mm	Inner Width b_1 min. mm	h_5 mm	G* mm	d_4 mm	B* mm	s min* mm	$b_3$min. mm	Weight* 1-Sided kg/m	Weight* 2-Sided kg/m
06 B-1**	**101 000 33**	**101 000 34**	3/8 x 7/32"	9,525	5,72	9,5	13,5	3,5	8,0	1,2	8,66	0,45	0,49
08 B-1	**105 000 33**	**105 000 34**	1/2 x 5/16"	12,7	7,75	13,0	17,9	4,5	9,5	1,6	11,43	0,75	0,81
10 B-1	**106 000 33**	**106 000 34**	5/8 x 3/8"	15,875	9,65	16,5	21,9	5,5	14,3	1,7	13,41	1,02	1,12
12 B-1	**107 000 33**	**107 000 34**	3/4 x 7/16"	19,05	11,68	21,0	26,6	6,6	16,0	1,8	15,75	1,28	1,41
16 B-1	**108 000 33**	**108 000 34**	1"x17,02mm	25,4	17,02	23,0	31,8	6,6	19,1	2,8	25,6	2,93	3,14

* The marked dimensions are not listed in the DIN and may vary a little.
Attachments with dimensions according to company standard are still available on request.
** This size is not listed in the DIN.

Roller Chains with Straight Attachments DIN ISO 606 (ex DIN 8187-2), M1, 6 x p

Attachment distance 6 x p
(attachment at every third outer link),
either one-sided or two-sided.

Other attachment distances can be supplied at short notice.
Different attachment sizes and special chains on request.

Connecting links (e.g. no.11/E) have to be ordered separately
(see page 37).

Ordering Details, e.g., Product No.: 101 000 35, Straight Attachments-Roller Chain 06 B-1-M1, One-Sided on the Outer Link, Distance 6 x p



M1 = Slim Version, 1 Mounting Hole

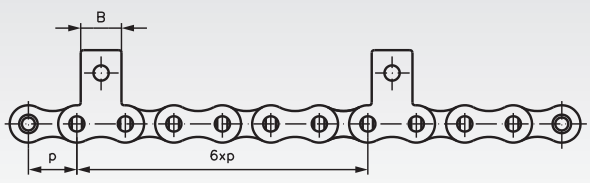

Straight Attachments, M1, 1 Mounting Hole

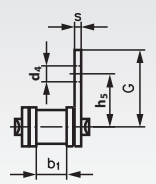

One-Sided

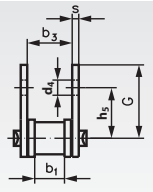

Two-Sided

DIN ISO No.	Product No. One-Sided 6 x p	Product No. Two-Sided 6 x p	Pitch x Inner Width p x b_1 inch	Pitch p mm	Inner Width b_1 min. mm	h_5 mm	G* mm	d_4 mm	B* mm	s min* mm	$b_3$min. mm	Weight* 1-Sided kg/m	Weight* 2-Sided kg/m
06 B-1**	**101 000 35**	**101 000 36**	3/8 x 7/32"	9,525	5,72	9,5	13,5	3,5	8,0	1,2	8,66	0,45	0,49
08 B-1	**105 000 35**	**105 000 36**	1/2 x 5/16"	12,7	7,75	13,0	17,9	4,5	9,5	1,6	11,43	0,75	0,81
10 B-1	**106 000 35**	**106 000 36**	5/8 x 3/8"	15,875	9,65	16,5	21,9	5,5	14,3	1,7	13,41	1,02	1,12
12 B-1	**107 000 35**	**107 000 36**	3/4 x 7/16"	19,05	11,68	21,0	26,6	6,6	16,0	1,8	15,75	1,28	1,41
16 B-1	**108 000 35**	**108 000 36**	1"x17,02mm	25,4	17,02	23,0	31,8	6,6	19,1	2,8	25,6	2,93	3,14

* The marked dimensions are not listed in the DIN and may vary a little.
Attachments with dimensions according to company standard are still available on request.
** This size is not listed in the DIN.

Roller Chains with Straight Attachments DIN ISO 606 (ex DIN 8187-2), M2, 2 x p

Attachment distance 2 x p
(attachment at every outer link),
either one-sided or two-sided.

Other attachment distances can be supplied at short notice.
Different attachment sizes and special chains on request.

Connecting links M2 have to be ordered separately (see below).

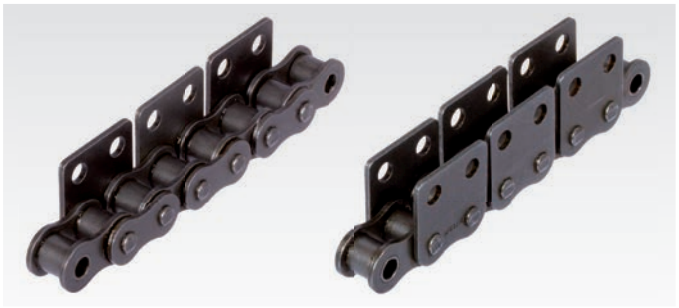

Ordering Details, e.g., Product No. 101 000 51, Wide Straight Attachments-Roller Chain 06 B-1-M2, One-Sided on the Outer Link, Distance 2 x p

M2 = Wide Version, 2 Mounting Holes

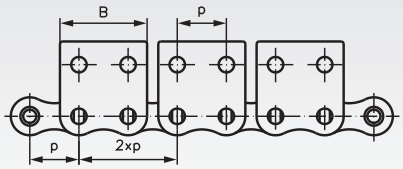

Straight Attachments, M2, 2 Mounting Holes

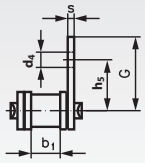

One-Sided

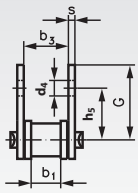

Two-Sided

DIN ISO No.	Product No. One-Sided 2 x p	Product No. Two-Sided 2 x p	Pitch x Inner Width p x b_1 inch	Pitch p mm	Inner Width b_1 min. mm	h_5 mm	G* mm	d_4 mm	B* mm	s min* mm	$b_3$min. mm	Weight* 1-Sided kg/m	Weight* 2-Sided kg/m
06 B-1**	**101 000 51**	**101 000 52**	3/8 x 7/32"	9,525	5,72	9,5	13,5	3,5	17,7	1,2	8,66	0,51	0,61
08 B-1	**105 000 51**	**105 000 52**	1/2 x 5/16"	12,7	7,75	13,0	17,9	4,5	23,2	1,6	11,43	0,84	0,99
10 B-1	**106 000 51**	**106 000 52**	5/8 x 3/8"	15,875	9,65	16,5	21,9	5,5	29,5	1,7	13,41	1,13	1,32
12 B-1	**107 000 51**	**107 000 52**	3/4 x 7/16"	19,05	11,68	21,0	26,6	6,6	33,8	1,8	15,75	1,43	1,70
16 B-1	**108 000 51**	**108 000 52**	1"x 17,02mm	25,4	17,02	23,0	31,8	6,6	46,2	2,8	25,6	3,24	3,76

* The marked dimensions are not listed in the DIN and may vary a little.
Attachments with dimensions according to company standard are still available on request.
** This size is not listed in the DIN.

Attention please: Packing Unit 5m
If special lengths are needed, please tell us the length and the number of links (uneven number!).
Connecting links have to be ordered separately.

Connecting Links M2 with Spring Clip, with Wide Straight Attachments DIN ISO 606 (ex DIN 8187-2)

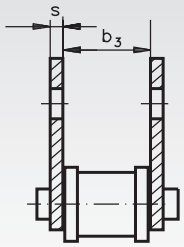

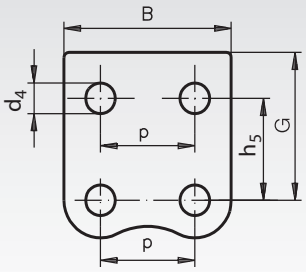


One-Sided


Two-Sided

Ordering Details, e.g., Product No. 101 003 51, Connecting Link M2, one-sided

M2 = Wide Version, 2 Mounting Holes

DIN ISO	Product No. One-Sided	Product No. Two-Sided	p mm	h_5 mm	G* mm	d_4 mm	B* mm	s min.* mm	b_3 min. mm	Weight* 1-Sided g	Weight* 2-Sided g
06 B-1**	**101 003 51**	**101 003 52**	9,525	9,5	13,5	3,5	17,7	1,2	8,66	5,6	6,9
08 B-1	**105 003 51**	**105 003 52**	12,7	13,0	17,9	4,5	23,2	1,6	11,43	11	18
10 B-1	**106 003 51**	**106 003 52**	15,875	16,5	21,9	5,5	29,5	1,7	13,41	21	30
12 B-1	**107 003 51**	**107 003 52**	19,05	21,0	26,6	6,6	33,8	1,8	15,75	30	40
16 B-1	**108 003 51**	**108 003 52**	25,4	23,0	31,8	6,6	46,2	2,8	25,6	89	117

* The marked dimensions are not listed in the DIN and may vary a little.
** This size is not listed in the DIN.

STAINLESS Stainless Version Page 54

Roller Chains with Straight Attachments DIN ISO 606 (ex DIN 8187-2), M2, 4 x p

Attachment distance 4 x p
(attachment at every second outer link),
either one-sided or two-sided.

Other attachment distances can be supplied at short notice.
Different attachment sizes and special chains on request.

Connecting links (e.g. no.11/E) have to be ordered separately
(see page 37).

Ordering Details, e.g., Product No. 101 000 53, Wide Straight Attachments-Roller Chain 06 B-1-M2, One-Sided on the Outer Link, Distance 4 x p

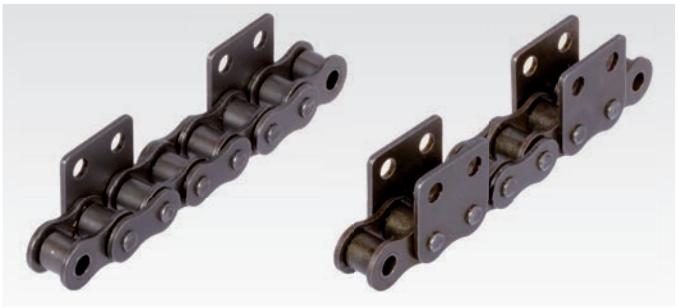

M2 = Wide Version, 2 Mounting Holes

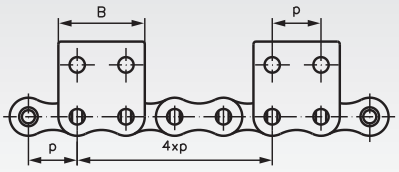

Straight Attachments, M2, 2 Mounting Holes

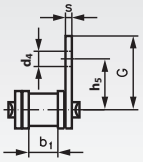

One-Sided

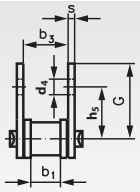

Two-Sided

DIN ISO No.	Product No. One-Sided 4 x p	Product No. Two-Sided 4 x p	Pitch x Inner Width p x b_1 inch	Pitch p mm	Inner Width b_1 min. mm	h_5 mm	G* mm	d_4 mm	B* mm	s min* mm	$b_3$min. mm	Weight* 1-Sided kg/m	Weight* 2-Sided kg/m
06 B-1**	**101 000 53**	**101 000 54**	3/8 x 7/32"	9,525	5,72	9,5	13,5	3,5	17,7	1,2	8,66	0,51	0,61
08 B-1	**105 000 53**	**105 000 54**	1/2 x 5/16"	12,7	7,75	13,0	17,9	4,5	23,2	1,6	11,43	0,84	0,99
10 B-1	**106 000 53**	**106 000 54**	5/8 x 3/8"	15,875	9,65	16,5	21,9	5,5	29,5	1,7	13,41	1,13	1,32
12 B-1	**107 000 53**	**107 000 54**	3/4 x 7/16"	19,05	11,68	21,0	26,6	6,6	33,8	1,8	15,75	1,43	1,70
16 B-1	**108 000 53**	**108 000 54**	1" x 17,02mm	25,4	17,02	23,0	31,8	6,6	46,2	2,8	25,6	3,24	3,76

* The marked dimensions are not listed in the DIN and may vary a little.
Attachments with dimensions according to company standard are still available on request.
** This size is not listed in the DIN.

Roller Chains with Straight Attachments DIN ISO 606 (ex DIN 8187-2), M2, 6 x p

Attachment distance 6 x p
(attachment at every third outer link),
either one-sided or two-sided.

Other attachment distances can be supplied at short notice.
Different attachment sizes and special chains on request.

Connecting links (e.g. no.11/E) have to be ordered separately
(see page 37).

Ordering Details, e.g., Product No. 101 000 55, Wide Straight Attachments-Roller Chain 06 B-1-M2, One-Sided on the Outer Link, Distance 6 x p



M2 = Wide Version, 2 Mounting Holes

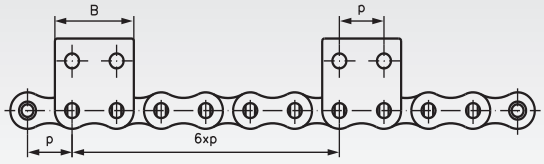

Straight Attachments, M2, 2 Mounting Holes

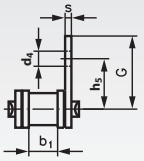

One-Sided

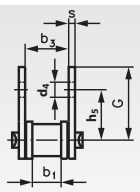

Two-Sided

DIN ISO No.	Product No. One-Sided 6 x p	Product No. Two-Sided 6 x p	Pitch x Inner Width p x b_1 inch	Pitch p mm	Inner Width b_1 min. mm	h_5 mm	G* mm	d_4 mm	B* mm	s min* mm	$b_3$min. mm	Weight* 1-Sided kg/m	Weight* 2-Sided kg/m
06 B-1**	**101 000 55**	**101 000 56**	3/8 x 7/32"	9,525	5,72	9,5	13,5	3,5	17,7	1,2	8,66	0,51	0,61
08 B-1	**105 000 55**	**105 000 56**	1/2 x 5/16"	12,7	7,75	13,0	17,9	4,5	23,2	1,6	11,43	0,84	0,99
10 B-1	**106 000 55**	**106 000 56**	5/8 x 3/8"	15,875	9,65	16,5	21,9	5,5	29,5	1,7	13,41	1,13	1,32
12 B-1	**107 000 55**	**107 000 56**	3/4 x 7/16"	19,05	11,68	21,0	26,6	6,6	33,8	1,8	15,75	1,43	1,70
16 B-1	**108 000 55**	**108 000 56**	1" x 17,02mm	25,4	17,02	23,0	31,8	6,6	46,2	2,8	25,6	3,24	3,76

* The marked dimensions are not listed in the DIN and may vary a little.
Attachments with dimensions according to company standard are still available on request.
** This size is not listed in the DIN.

Roller Chains with Bent Attachments DIN ISO 606 (ex DIN 8187-2), K1, 2 x p

Attachment distance 2 x p
(attachment at every outer link),
either one-sided or two-sided.

Other Attachment distance can be supplied at short notice.
Different attachment sizes and special chains on request.

Connecting links K1 have to be ordered separately (see below).



Ordering Details, e.g., Product No. 101 000 01, Roller Chain with Bent Attachments 06 B-1-K1, One-Sided on the Outer Link, Distance 2xp

K1 = Slim Version, 1 Mounting Hole

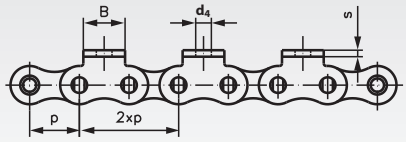

Bent Attachments, K1, 1 Mounting Hole

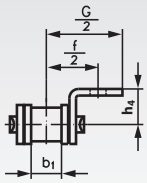

One-Sided

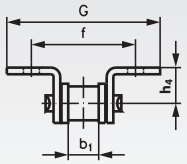

Two-Sided

DIN ISO No.	Product No. One-Sided 2 x p	Product No. Two-Sided 2 x p	Pitch x Inner Width p x b_1 inch	Pitch p mm	Inner Width b_1 min. mm	h_4 mm	d_4 mm	f/2 mm	G/2* mm	B* mm	s min* mm	Weight* 1-Sided kg/m	Weight* 2-Sided kg/m
06 B-1**	**101 000 01**	**101 000 02**	3/8 x 7/32"	9,525	5,72	6,5	3,5	9,5	13,5	8,0	1,2	0,45	0,49
08 B-1	**105 000 01**	**105 000 02**	1/2 x 5/16"	12,7	7,75	8,9	4,5	12,7	17,6	9,5	1,6	0,75	0,81
10 B-1	**106 000 01**	**106 000 02**	5/8 x 3/8"	15,875	9,65	10,3	5,5	15,9	22,5	14,3	1,7	1,03	1,12
12 B-1	**107 000 01**	**107 000 02**	3/4 x 7/16"	19,05	11,68	13,5	6,6	19,05	26,5	16,0	1,8	1,27	1,38
16 B-1	**108 000 01**	**108 000 02**	1"x 17,02mm	25,4	17,02	15,9	6,6	25,40	36,3	19,1	2,8	2,94	3,17

* The marked dimensions are not listed in the DIN and may vary a little.
Attachments with dimensions according to company standard are still available on request.
** This size is not listed in the DIN.

Attention please: Packing Unit 5m
If special lengths are needed, please tell us the length and the number of links (uneven number!).
Connecting links have to be ordered separately.

Connecting Links K1 with Spring Clip, with Slim, Bent Attachments DIN ISO 606 (ex DIN 8187-2)

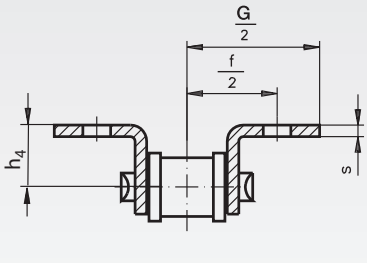

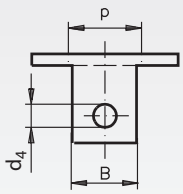

Slim Bent Attachment = Version K1 (view from top, turned).

.



One-Sided



Two-Sided

Ordering Details, e.g., Product No. 101 003 01, Connecting Link K1, one-sided

K1 = Slim Version, 1 Mounting Hole

DIN ISO	Product No. One-Sided	Product No. Two-Sided	p mm	h_4 mm	d_4 mm	f/2 mm	G/2* mm	B* mm	s min.* mm	Weight* 1-Sided g	Weight* 2-Sided g
06 B-1**	**101 003 01**	**101 003 02**	9,525	6,5	3,5	9,5	13,5	8,0	1,2	5,1	5,7
08 B-1	**105 003 01**	**105 003 02**	12,7	8,9	4,5	12,7	17,6	9,5	1,6	11,2	13,6
10 B-1	**106 003 01**	**106 003 02**	15,875	10,3	5,5	15,9	22,5	14,3	1,7	17,4	21,5
12 B-1	**107 003 01**	**107 003 02**	19,05	13,5	6,6	19,05	26,5	16,0	1,8	23	28
16 B-1	**108 003 01**	**108 003 02**	25,4	15,9	6,6	25,4	36,3	19,1	2,8	75	89

* The marked dimensions are not listed in the DIN and may vary a little.
** This size is not listed in the DIN.

Roller Chains with Bent Attachments DIN ISO 606 (ex DIN 8187-2), K1, 4 x p

Attachment distance 4 x p
(attachment at every second outer link),
either one-sided or two-sided.

Other Attachment distance can be supplied at short notice.
Different attachment sizes and special chains on request.

Connecting links (e.g. no.11/E) have to be ordered separately
(see page 37).

Ordering Details, e.g., Product No. 101 000 03, Roller Chain with Bent Attachments 06 B-1-K1, One-Sided on the Outer Link, Distance 4 x p



K1 = Slim Version, 1 Mounting Hole

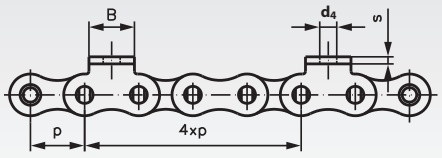

Bent Attachments, K1, 1 Mounting Hole

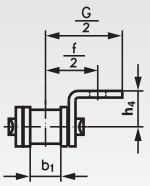

One-Sided

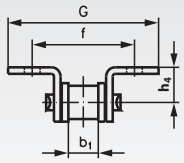

Two-Sided

DIN ISO No.	Product No. One-Sided 4 x p	Product No. Two-Sided 4 x p	Pitch x Inner Width p x b_1 inch	Pitch p mm	Inner Width b_1 min. mm	h_4 mm	d_4 mm	f/2 mm	G/2* mm	B* mm	s min* mm	Weight* 1-Sided kg/m	Weight* 2-Sided kg/m
06 B-1**	**101 000 03**	**101 000 04**	3/8 x 7/32"	9,525	5,72	6,5	3,5	9,5	13,5	8,0	1,2	0,45	0,49
08 B-1	**105 000 03**	**105 000 04**	1/2 x 5/16"	12,7	7,75	8,9	4,5	12,7	17,6	9,5	1,6	0,75	0,81
10 B-1	**106 000 03**	**106 000 04**	5/8 x 3/8"	15,875	9,65	10,3	5,5	15,9	22,5	14,3	1,7	1,03	1,12
12 B-1	**107 000 03**	**107 000 04**	3/4 x 7/16"	19,05	11,68	13,5	6,6	19,05	26,5	16,0	1,8	1,27	1,38
16 B-1	**108 000 03**	**108 000 04**	1" x 17,02mm	25,4	17,02	15,9	6,6	25,4	36,3	19,1	2,8	2,94	3,17

* The marked dimensions are not listed in the DIN and may vary a little.
Attachments with dimensions according to company standard are still available on request.
** This size is not listed in the DIN.

Roller Chains with Bent Attachments DIN ISO 606 (ex DIN 8187-2), K1, 6 x p

Attachment distance 6 x p
(attachment at every third outer link),
either one-sided or two-sided.

Other Attachment distance can be supplied at short notice.
Different attachment sizes and special chains on request.

Connecting links (e.g. no.11/E) have to be ordered separately
(see page 37).

Ordering Details, e.g., Product No. 101 000 05, Roller Chain with Bent Attachments 06 B-1-K1, One-Sided on the Outer Link, Distance 6 x p



K1 = Slim Version, 1 Mounting Hole

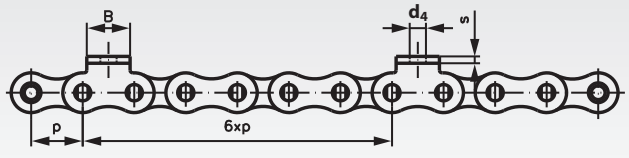

Bent Attachments, K1, 1 Mounting Hole

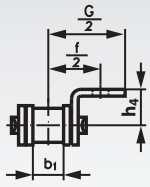

One-Sided

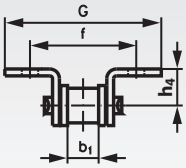

Two-Sided

DIN ISO No.	Product No. One-Sided 6 x p	Product No. Two-Sided 6 x p	Pitch x Inner Width p x b_1 inch	Pitch p mm	Inner Width b_1 min. mm	h_4 mm	d_4 mm	f/2 mm	G/2* mm	B* mm	s min* mm	Weight* 1-Sided kg/m	Weight* 2-Sided kg/m
06 B-1**	**101 000 05**	**101 000 06**	3/8 x 7/32"	9,525	5,72	6,5	3,5	9,5	13,5	8,0	1,2	0,45	0,49
08 B-1	**105 000 05**	**105 000 06**	1/2 x 5/16"	12,7	7,75	8,9	4,5	12,7	17,6	9,5	1,6	0,75	0,81
10 B-1	**106 000 05**	**106 000 06**	5/8 x 3/8"	15,875	9,65	10,3	5,5	15,9	22,5	14,3	1,7	1,03	1,12
12 B-1	**107 000 05**	**107 000 06**	3/4 x 7/16"	19,05	11,68	13,5	6,6	19,05	26,5	16,0	1,8	1,27	1,38
16 B-1	**108 000 05**	**108 000 06**	1" x 17,02mm	25,4	17,02	15,9	6,6	25,4	36,3	19,1	2,8	2,94	3,17

* The marked dimensions are not listed in the DIN and may vary a little.
Attachments with dimensions according to company standard are still available on request.
** This size is not listed in the DIN.

Roller Chains with Bent Attachments DIN ISO 606 (ex DIN 8187-2), K2, 2 x p

Attachment distance 2 x p
(attachment at every outer link),
either one-sided or two-sided.

Other attachment distances can be supplied at short notice.
Different attachment sizes and special chains on request.

Connecting links K2 have to be ordered separately (see below).



Ordering Details, e.g., Product No. 101 000 21, Roller Chain with Bent Attachments 06 B-1-K2, One-Sided on the Outer Link, Distance 2xp

K2 = Wide Version, 2 Mounting Holes

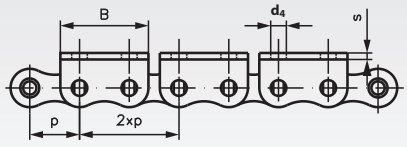

Bent Attachments, K2, 2 Mounting Holes

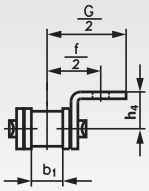

One-Sided

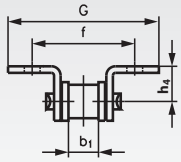

Two-Sided

DIN ISO No.	Product No. One-Sided 2 x p	Product No. Two-Sided 2 x p	Pitch x Inner Width p x b_1 inch	Pitch p mm	Inner Width b_1 min. mm	h_4 mm	d_4 mm	f/2 mm	G/2* mm	B* mm	s min* mm	Weight* 1-Sided kg/m	Weight* 2-Sided kg/m
06 B-1**	**101 000 21**	**101 000 22**	3/8 x 7/32“	9,525	5,72	6,5	3,5	9,5	13,7	17,7	1,2	0,51	0,61
08 B-1	**105 000 21**	**105 000 22**	1/2 x 5/16“	12,7	7,75	8,9	4,5	12,7	17,6	23,2	1,6	0,84	0,99
10 B-1	**106 000 21**	**106 000 22**	5/8 x 3/8“	15,875	9,65	10,3	5,5	15,9	22,5	29,5	1,7	1,13	1,30
12 B-1	**107 000 21**	**107 000 22**	3/4 x 7/16“	19,05	11,68	13,5	6,6	19,05	26,5	33,8	1,8	1,40	1,64
16 B-1	**108 000 21**	**108 000 22**	1“ x 17,02mm	25,4	17,02	15,9	6,6	25,4	36,3	46,2	2,8	3,26	3,82

* The marked dimensions are not listed in the DIN and may vary a little.
Attachments with dimensions according to company standard are still available on request.
** This size is not listed in the DIN.

Attention please: Packing Unit 5m
If special lengths are needed, please tell us the length and the number of links (uneven number!).
Connecting links have to be ordered separately.

Connecting Links K2 with Spring Clip, with Wide, Bent Attachments DIN ISO 606 (ex DIN 8187-2)

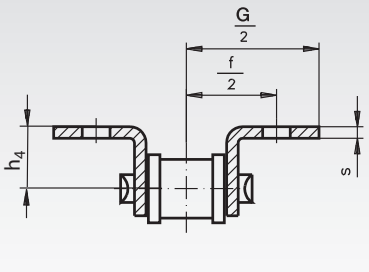

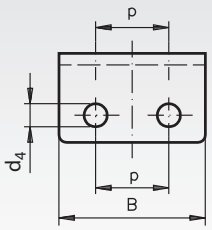

Wide Bent Attachment = Version K2 (view from top, turned).



One-Sided



Two-Sided

Ordering Details, e.g., Product No. 101 003 21, Connecting Link K2, one-sided

K2 = Wide Version, 2 Mounting Holes

DIN ISO	Product No. One-Sided	Product No. Two-Sided	p mm	h_4 mm	d_4 mm	f/2 mm	G/2* mm	B* mm	s min.* mm	Weight* 1-Sided g	Weight* 2-Sided g
06 B-1**	**101 003 21**	**101 003 22**	9,525	6,5	3,5	9,5	13,7	17,7	1,2	6,2	6,2
08 B-1	**105 003 21**	**105 003 22**	12,7	8,9	4,5	12,7	17,6	23,2	1,6	13,7	18,4
10 B-1	**106 003 21**	**106 003 22**	15,875	10,3	5,5	15,9	22,5	29,5	1,7	21	29
12 B-1	**107 003 21**	**107 003 22**	19,05	13,5	6,6	19,05	26,5	33,8	1,8	29	40
16 B-1	**108 003 21**	**108 003 22**	25,4	15,9	6,6	25,4	36,3	46,2	2,8	88	116

* The marked dimensions are not listed in the DIN and may vary a little.
** This size is not listed in the DIN.

STAINLESS Stainless Version Page 55

Roller Chains with Bent Attachments DIN ISO 606 (ex DIN 8187-2), K2, 4 x p

Attachment distance 4 x p
(attachment at every second outer link),
either one-sided or two-sided.

Other attachment distances can be supplied at short notice.
Different attachment sizes and special chains on request.

Connecting links (e.g. no.11/E) have to be ordered separately
(see page 37).

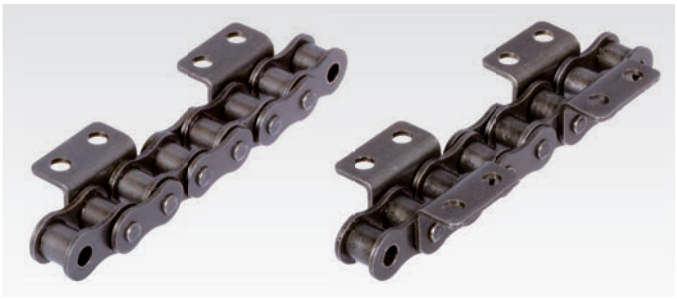

Ordering Details, e.g., Product No. 101 000 23, Roller Chain with Bent Attachments 06 B-1-K2, One-Sided on the Outer Link, Distance 4 x p

K2 = Wide Version, 2 Mounting Holes

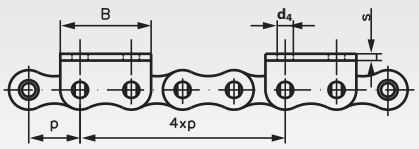

Bent Attachments, K2, 2 Mounting Holes

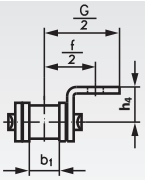

One-Sided

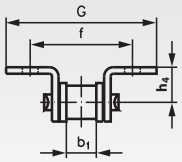

Two-Sided

DIN ISO No.	Product No. One-Sided 4 x p	Product No. Two-Sided 4 x p	Pitch x Inner Width p x b_1 inch	Pitch p mm	Inner Width b_1 min. mm	h_4 mm	d_4 mm	f/2 mm	G/2* mm	B* mm	s min* mm	Weight* 1-Sided kg/m	Weight* 2-Sided kg/m
06 B-1**	**101 000 23**	**101 000 24**	3/8 x 7/32"	9,525	5,72	6,5	3,5	9,5	13,7	17,7	1,2	0,51	0,61
08 B-1	**105 000 23**	**105 000 24**	1/2 x 5/16"	12,7	7,75	8,9	4,5	12,7	17,6	23,2	1,6	0,84	0,99
10 B-1	**106 000 23**	**106 000 24**	5/8 x 3/8"	15,875	9,65	10,3	5,5	15,9	22,5	29,5	1,7	1,13	1,30
12 B-1	**107 000 23**	**107 000 24**	3/4 x 7/16"	19,05	11,68	13,5	6,6	19,05	26,5	33,8	1,8	1,40	1,64
16 B-1	**108 000 23**	**108 000 24**	1" x 17,02mm	25,4	17,02	15,9	6,6	25,4	36,3	46,2	2,8	3,26	3,82

* The marked dimensions are not listed in the DIN and may vary a little.
Attachments with dimensions according to company standard are still available on request.
** This size is not listed in the DIN.

Roller Chains with Bent Attachments DIN ISO 606 (ex DIN 8187-2), K2, 6 x p

Attachment distance 6 x p
(attachment at every third outer link),
either one-sided or two-sided.

Other attachment distances can be supplied at short notice.
Different attachment sizes and special chains on request.

Connecting links (e.g. no.11/E) have to be ordered separately
(see page 37).



Ordering Details, e.g., Product No. 101 000 25, Roller Chain with Bent Attachments 06 B-1-K2, One-Sided on the Outer Link, Distance 6 x p

K2 = Wide Version, 2 Mounting Holes

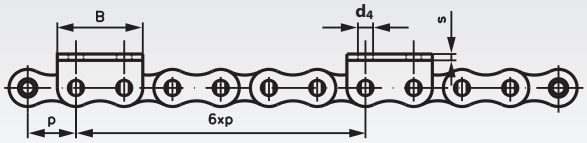

Bent Attachments, K2, 2 Mounting Holes

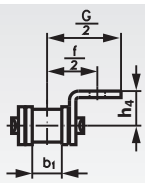

One-Sided

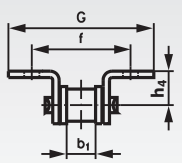

Two-Sided

DIN ISO No.	Product No. One-Sided 6 x p	Product No. Two-Sided 6 x p	Pitch x Inner Width p x b_1 inch	Pitch p mm	Inner Width b_1 min. mm	h_4 mm	d_4 mm	f/2 mm	G/2* mm	B* mm	s min* mm	Weight* 1-Sided kg/m	Weight* 2-Sided kg/m
06 B-1**	**101 000 25**	**101 000 26**	3/8 x 7/32"	9,525	5,72	6,5	3,5	9,5	13,7	17,7	1,2	0,51	0,61
08 B-1	**105 000 25**	**105 000 26**	1/2 x 5/16"	12,7	7,75	8,9	4,5	12,7	17,6	23,2	1,6	0,84	0,99
10 B-1	**106 000 25**	**106 000 26**	5/8 x 3/8"	15,875	9,65	10,3	5,5	15,9	22,5	29,5	1,7	1,13	1,30
12 B-1	**107 000 25**	**107 000 26**	3/4 x 7/16"	19,05	11,68	13,5	6,6	19,05	26,5	33,8	1,8	1,40	1,64
16 B-1	**108 000 25**	**108 000 26**	1" x 17,02mm	25,4	17,02	15,9	6,6	25,4	36,3	46,2	2,8	3,26	3,82

* The marked dimensions are not listed in the DIN and may vary a little.
Attachments with dimensions according to company standard are still available on request.
** This size is not listed in the DIN.

Roller Chains with Straight Attachments Similar to DIN ISO 606 (ex DIN 8187-2), M2, 2 x p, Stainless

Material: Stainless steel 1.4301.

STAINLESS

Attachment distance 2 x p
(attachment at every outer link),
either one-sided or two-sided.

Other attachment distances can be supplied at short notice.
Different attachment sizes and special chains on request.

Connecting links M2 have to be ordered separately (see below).

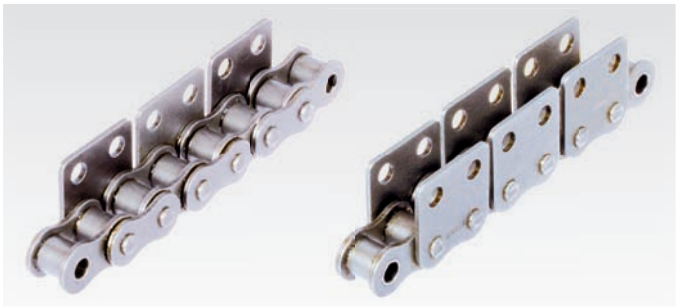

Ordering Details, e.g., Product No. 101 990 51, Wide Straight Attachments-Roller Chain 06 B-1-M2, One-Sided on the Outer Link, Distance 2 x p, stainless

M2 = Wide Version, 2 Mounting Holes

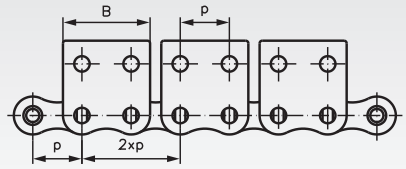

Straight Attachments, M2, 2 Mounting Holes

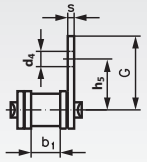

One-Sided

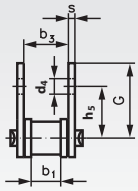

Two-Sided

DIN ISO No.	Product No. One-Sided 2 x p	Product No. Two-Sided 2 x p	Pitch x Inner Width p x b_1 inch	Pitch p mm	Inner Width b_1 min. mm	h_5 mm	G* mm	d_4 mm	B* mm	s min* mm	$b_3$min. mm	Weight* 1-Sided kg/m	Weight* 2-Sided kg/m
06 B-1**	**101 990 51**	**101 990 52**	3/8 x 7/32"	9,525	5,72	9,5	13,5	3,5	17,7	1,2	8,66	0,51	0,61
08 B-1	**105 990 51**	**105 990 52**	1/2 x 5/16"	12,7	7,75	13,0	17,9	4,5	23,2	1,6	11,43	0,84	0,99
10 B-1	**106 990 51**	**106 990 52**	5/8 x 3/8"	15,875	9,65	16,5	21,9	5,5	29,5	1,7	13,41	1,13	1,32

* The marked dimensions are not listed in the DIN and may vary a little.
Attachments with dimensions according to company standard are still available on request.
** This size is not listed in the DIN.

Attention please: Packing Unit 5m
If special lengths are needed, please tell us the length and the number of links (uneven number!).
Connecting links have to be ordered separately.

Connecting Links M2 with Spring Clip, with Wide Straight Attachments Similar to DIN ISO 606, Stainless

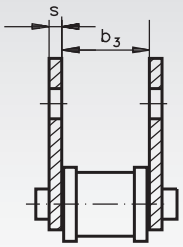

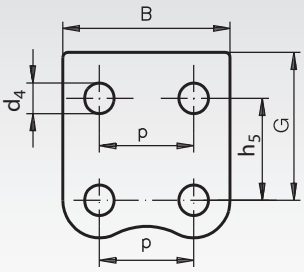



One-Sided



Two-Sided

Ordering Details, e.g., Product No. 101 993 51, Connecting Link M2, one-sided, stainless

STAINLESS

M2 = Wide Version, 2 Mounting Holes

DIN ISO	Product No. One-Sided	Product No. Two-Sided	p mm	h_5 mm	G* mm	d_4 mm	B* mm	s min.* mm	b_3 min. mm	Weight* 1-Sided g	Weight* 2-Sided g
06 B-1**	**101 993 51**	**101 993 52**	9,525	9,5	13,5	3,5	17,7	1,2	8,66	5,6	6,9
08 B-1	**105 993 51**	**105 993 52**	12,7	13,0	17,9	4,5	23,2	1,6	11,43	11	18
10 B-1	**106 993 51**	**106 993 52**	15,875	16,5	21,9	5,5	29,5	1,7	13,41	21	30
12 B-1	**107 993 51**	**107 993 52**	19,05	21,0	26,6	6,6	33,8	1,8	15,75	30	40
16 B-1	**108 993 51**	**108 993 52**	25,4	23,0	31,8	6,6	46,2	2,8	25,6	89	117

* The marked dimensions are not listed in the DIN and may vary a little.
** This size is not listed in the DIN.

MÄDLER® GEGRÜNDET 1882

Roller Chains with Bent Attachments Similar to DIN ISO 606 (ex DIN 8187-2), K2, 2 x p, Stainless

Attachment distance 2 x p
(attachment at every outer link),
either one-sided or two-sided.

STAINLESS

Other attachment distances can be supplied at short notice.
Different attachment sizes and special chains on request.

Connecting links K2 have to be ordered separately (see below).

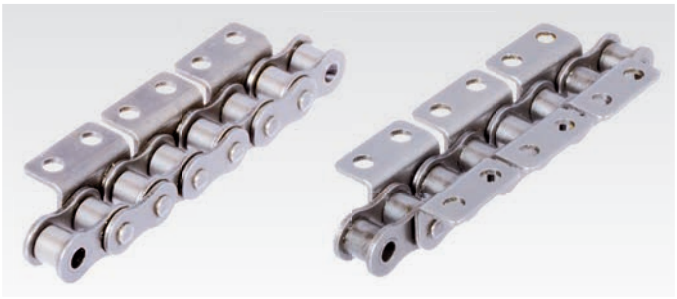

Ordering Details, e.g., Product No. 101 990 21, Roller Chain with Bent Attachments 06 B-1-K2, One-Sided on the Outer Link, Distance 2xp, stainless

K2 = Wide Version, 2 Mounting Holes

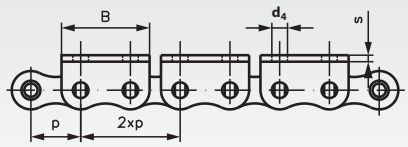

Bent Attachments, K2, 2 Mounting Holes

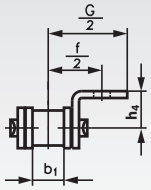

One-Sided

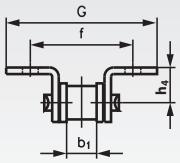

Two-Sided

DIN ISO No.	Product No. One-Sided 2 x p	Product No. Two-Sided 2 x p	Pitch x Inner Width p x b_1 inch	Pitch p mm	Inner Width b_1 min. mm	h_4 mm	d_4 mm	f/2 mm	G/2* mm	B* mm	s min* mm	Weight* 1-Sided kg/m	Weight* 2-Sided kg/m
06 B-1**	**101 990 21**	**101 990 22**	3/8 x 7/32"	9,525	5,72	6,5	3,5	9,5	13,5	17,7	1,2	0,51	0,61
08 B-1	**105 990 21**	**105 990 22**	1/2 x 5/16"	12,7	7,75	8,9	4,5	12,7	17,6	23,2	1,6	0,84	0,99
10 B-1	**106 990 21**	**106 990 22**	5/8 x 3/8"	15,875	9,65	10,3	5,5	15,9	22,5	29,5	1,7	1,13	1,30

* The marked dimensions are not listed in the DIN and may vary a little.
Attachments with dimensions according to company standard are still available on request.
** This size is not listed in the DIN.

Attention please: Packing Unit 5m
If special lengths are needed, please tell us the length and the number of links (uneven number!).
Connecting links have to be ordered separately.

Connecting Links K2 with Spring Clip, with Wide, Bent Attachments Similar to DIN ISO 606, Stainless

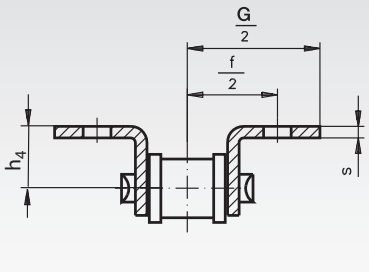

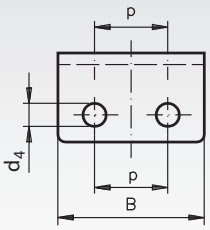

Wide Bent Attachment = Version K2 (view from top, turned).



One-Sided



Two-Sided

Ordering Details, e.g., Product No. 101 993 21, Connecting Link K2, one-sided, stainless

STAINLESS

K2 = Wide Version, 2 Mounting Holes

DIN ISO	Product No. One-Sided	Product No. Two-Sided	p mm	h_4 mm	d_4 mm	f/2 mm	G/2* mm	B* mm	s min.* mm	Weight* 1-Sided g	Weight* 2-Sided g
06 B-1**	**101 993 21**	**101 993 22**	9,525	6,5	3,5	9,5	13,5	17,7	1,2	6,2	6,2
08 B-1	**105 993 21**	**105 993 22**	12,7	8,9	4,5	12,7	17,6	23,2	1,6	13,7	18,4
10 B-1	**106 993 21**	**106 993 22**	15,875	10,3	5,5	15,9	22,5	29,5	1,7	21	29
12 B-1	**107 993 21**	**107 993 22**	19,05	13,5	6,6	19,05	26,2	33,8	1,8	29	40
16 B-1	**108 993 21**	**108 993 22**	25,4	15,9	6,6	25,4	36,3	46,2	2,8	88	116

* The marked dimensions are not listed in the DIN and may vary a little.
** This size is not listed in the DIN.

Cutting the Chain:
- Special chain breaking machine with quick tool change for several chain sizes.
- For cutting chains to any fixed length required by the customer.
- From one-off pieces to large series at very short notice.

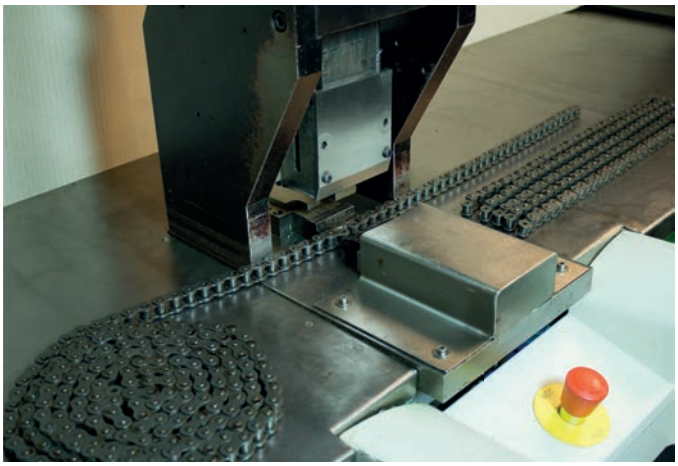

Riveting the Chain:
- Special chain-riveting machine with quick tool change for several chain sizes.
- Riveting fixed-length chains into endless riveted chains.
- Riveting of attachments to create customized chains matching your special requirements, e.g. with different distances of the attachments.
- From one-off pieces to large series at very short notice.

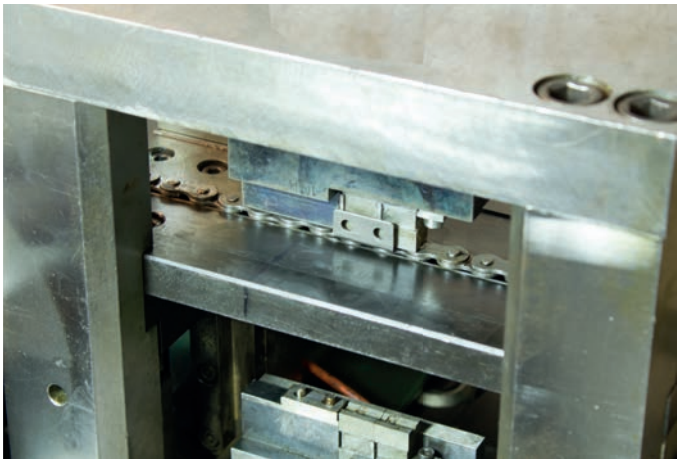

Chain Configurator on the Internet:
- At www.maedler.de in the section ***MÄDLER***®-Tools.
- Fast selection of attachments according to DIN ISO 606 (ex DIN 8187-2).
- Selection of chain lengths and attachment distances.
- Printout with detailed description, also stating the price.

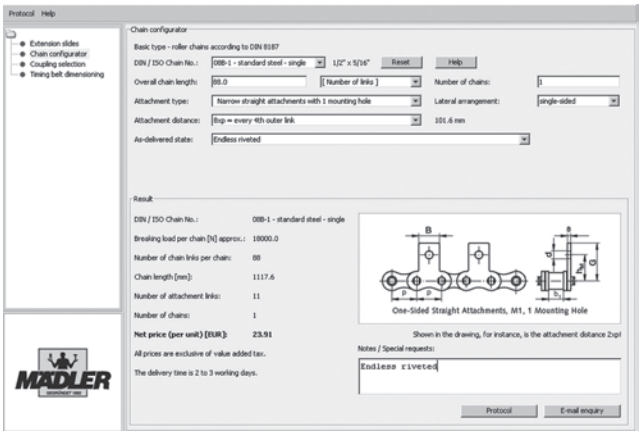

Other Special Chains (on request):
- With extended pins in various arrangements, with or without keyway.
- Other attachment shapes (e.g. serrated for use with cardboard packaging material or with extra large carriers to transport round material).
- Roller chains with long links.
- Roller chains of other standards (e.g. Ansi / DIN 8188).



Plastic Guide Rails for Roller Chains DIN ISO 606 (ex DIN 8187)

Material: Low pressure polyethylene PE-UHMW.

These side-rails serve to support fast-running roller chains which are lined up exactly; other than steel or metal side-rails they dampen the noise and reduce strong wear.
Special features: wear-resistant, self-lubricating, resistant against diluted acids and diluted alkalines, impact resistant, corrosion resistant, soil resistant and cost efficient.
Stock lengths 1 meter and 2 meter.

Temperature range: -200°C to +60°C (for short time up to +80°C).

Fixed length and other types on request.

Ordering Details, e.g., Product No. 141 001 00, Guide Rail 06 B-1, length 1m, 15x10mm

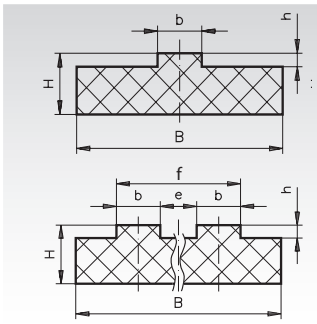



DIN ISO	**Product No.** Length 1m*	**Product No.** Length 2m	Pitch inch	B mm	H mm	b mm	e mm	f mm	h mm	Weight kg/m
06 B-1	**141 001 00**	**141 101 00**	3/8 x 7/32"	15	10	5,4	-	-	1,5	0,13
083	**141 003 00**	**141 103 00**	1/2 x 3/16"	15	10	4,7	-	-	1,6	0,10
08 B-1	**141 005 00**	**141 105 00**	1/2 x 5/16"	20	10	7,4	-	-	2,2	0,18
08 B-1	**141 005 01**	**141 105 01**	1/2 x 5/16"	20	15	7,4	-	-	2,2	0,26
08 B-1	**141 005 02**	**141 105 02**	1/2 x 5/16"	20	20	7,4	-	-	2,2	0,34
10 B-1	**141 006 00**	**141 106 00**	5/8 x 3/8"	20	15	9,2	-	-	2,6	0,25
10 B-1	**141 006 01**	**141 106 01**	5/8 x 3/8"	20	20	9,2	-	-	2,6	0,33
12 B-1	**141 007 00**	**141 107 00**	3/4 x 7/16"	25	15	11,3	-	-	2,4	0,32
12 B-1	**141 007 01**	**141 107 01**	3/4 x 7/16"	25	20	11,3	-	-	2,4	0,43
16 B-1	**141 008 00**	**141 108 00**	1" x 17,02 mm	40	15	16,5	-	-	3,5	0,45
16 B-1	**141 008 01**	**141 108 01**	1" x 17,02 mm	40	20	16,5	-	-	3,5	0,68
06 B-2	**141 021 00**	**141 121 00**	3/8 x 7/32"	25	10	5,4	4,9	15,7	1,5	0,22
08 B-2	**141 025 00**	**141 125 00**	1/2 x 5/16"	35	10	7,4	6,6	21,4	2,2	0,30
08 B-2	**141 025 01**	**141 125 01**	1/2 x 5/16"	35	15	7,4	6,6	21,4	2,2	0,46
08 B-2	**141 025 02**	**141 125 02**	1/2 x 5/16"	35	20	7,4	6,6	21,4	2,2	0,63
10 B-2	**141 026 00**	**141 126 00**	5/8 x 3/8"	40	10	9,2	7,4	25,8	2,6	0,32
10 B-2	**141 026 01**	**141 126 01**	5/8 x 3/8"	40	15	9,2	7,4	25,8	2,6	0,54
10 B-2	**141 026 02**	**141 126 02**	5/8 x 3/8"	40	20	9,2	7,4	25,8	2,6	0,77
12 B-2	**141 027 01**	**141 127 01**	3/4 x 7/16"	45	15	11,3	8,2	30,8	2,4	0,62
12 B-2	**141 027 02**	**141 127 02**	3/4 x 7/16"	45	20	11,3	8,2	30,8	2,4	0,85
16 B-2	**141 028 01**	**141 128 01**	1" x 17,02 mm	65	15	16,5	15,4	48,4	3,5	0,86
16 B-2	**141 028 02**	**141 128 02**	1" x 17,02 mm	65	20	16,5	15,4	48,4	3,5	1,19
06 B-3	**141 031 00**	**141 131 00**	3/8 x 7/32"	35	10	5,4	4,9	25,9	1,5	0,77
08 B-3	**141 035 00**	**141 135 00**	1/2 x 5/16"	45	10	7,4	6,5	35,2	2,2	0,82
08 B-3	**141 035 01**	**141 135 01**	1/2 x 5/16"	45	15	7,4	6,5	35,2	2,2	1,05
08 B-3	**141 035 02**	**141 135 02**	1/2 x 5/16"	45	20	7,4	6,5	35,2	2,2	1,27
10 B-3	**141 036 00**	**141 136 00**	5/8 x 3/8"	55	10	9,2	7,4	42,4	2,6	0,85
10 B-3	**141 036 01**	**141 136 01**	5/8 x 3/8"	55	15	9,2	7,4	42,4	2,6	1,13
10 B-3	**141 036 02**	**141 136 02**	5/8 x 3/8"	55	20	9,2	7,4	42,4	2,6	1,40
12 B-3	**141 037 00**	**141 137 00**	3/4 x 7/16"	60	15	11,3	8,2	50,2	2,4	0,86
12 B-3	**141 037 01**	**141 137 01**	3/4 x 7/16"	60	20	11,3	8,2	50,2	2,4	1,16

* One end is cut by saw. Length tolerance -5mm.





Tensioning Wheels page 109

Chain Breaker



Ordering Details: e.g.:
Product No. 140 703 00, Chain Breaker 06 B

Product No.	for DIN	Weight g
140 703 00	06 B-1, 06 B-2	910
140 705 00	081, 083, 08 B-1 and 08 B-2	915
140 707 00	10 B-1, 10 B-2, 12 B-1 and 12 B-2	1160
140 708 00	16 B-1	2020

Replacement Pin for Chain Breaker

Product No. Replacement Pin	Matching Chain Breaker	
140 713 00	140 703 00	(Type 455)
140 715 00	140 705 00	(Type 462)
140 717 00	140 707 00	(Type 501-513)
140 718 00	140 708 00	(Type 548)

Chain Puller



Ordering Details: e.g.:
Product No. 140 721 00, Chain Puller 081-12 B

Product No.	for DIN*	Weight g
140 721 00	081, 083, 08 B to 12 B	160
140 722 00	16 B to max. 65 mm	960

*can also be used for similar sizes of other standards and for double-strand and triple-strand chains.

Product No. 140 721 00 with knob.

Product No. 140 722 00 with turn lever.

Chain Lubrication Spray



Ordering Details:
Product No. 140 701 00, Chain Lubrication Spray

Product No.	Contents ml	Weight g
140 701 00	400	465

- special adhesive lubricant for the maintenance of heavy duty and fast running drives or timing chains, plain bearings, open gear units, etc.
- temperature resistant from -10° to +140°C.
- strong adhesive power.
- highly capable of creep.
- drives out water.
- dampens noise.
- protects from wear.
- protects from corrosion.
- silicone-free.







Chain Tensioners page 111

Rolling bearings at MÄDLER®:



Ball bearings, open



Ball bearings, 2Z



Ball bearings, 2RS

SKF®

The premium brand
- for the sophisiticated application

MÄDLER® GEGRÜNDET 1882

The reliable brand
- the inexpensive option



Angular contact ball bearings



Self aligning ball bearings



Cylindrical roller bearings



Spherical roller bearings



Tapered roller bearings

The rolling bearings are to find:

- *in this catalog page 416*
- *on the internet at www.maedler.de*

Overview Sprockets for Roller Chains DIN ISO 606 (ex DIN 8187)



Sprockets for Single-Strand Roller Chains (Simplex-Chains)

	Pitch	Type	Page
Comp. stand. 4 mm	4 mm	Steel with hub, pre-bored	79
DIN ISO 03	5 mm	Steel with hub, pre-bored	79
DIN ISO 04	6 mm	Plastic polyacetal, pre-bored	62
		Steel with and without hub, pre-bored	80
DIN ISO 05B-1	8 mm	Plastic polyacetal, pre-bored	62
		Stainless steel, pre-bored	63
		Steel with and without hub, pre-bored	81
DIN ISO 06B-1	3/8x7/32"	Plastic polyacetal, pre-bored	62
		Stainless steel, pre-bored	63
		Steel hardened, ready-to-mount, custom bore with keyway	64
		Taper version, ready for Taper clamping bush	74
		Steel with and without hub, pre-bored, partly hardened	82
		Double sprockets for two single-strand chains, pre-bored	91
DIN ISO 081	1/2x1/8"	Plastic polyacetal, pre-bored	62
		Steel with and without hub, pre-bored	83
DIN ISO 083 and comp. standard	1/2x3/16"	Plastic polyacetal, pre-bored	62
		Steel with and without hub, pre-bored	84
DIN ISO 08B-1	1/2x5/16"	Plastic polyacetal, pre-bored	62
		Stainless steel, pre-bored	63
		Steel hardened, ready-to-mount, custom bore with keyway	66
		Taper version, ready for Taper clamping bush	74
		Steel with and without hub, pre-bored, partly hardened	85
		Double sprockets for two single-strand chains, pre-bored	91
DIN ISO 10B-1	5/8x3/8"	Stainless steel, pre-bored	63
		Steel hardened, ready-to-mount, custom bore with keyway	68
		Taper version, ready for Taper clamping bush	74
		Steel with and without hub, pre-bored, partly hardened	86
		Double sprockets for two single-strand chains, pre-bored	91
DIN ISO 12B-1	3/4x7/16"	Stainless steel, pre-bored	63
		Steel hardened, ready-to-mount, custom bore with keyway	70
		Taper version, ready for Taper clamping bush	74
		Steel with and without hub, pre-bored, partly hardened	87
		Double sprockets for two single-strand chains, pre-bored	91
DIN ISO 16B-1	1"x17.02	Stainless steel, pre-bored	63
		Steel hardened, ready-to-mount, custom bore with keyway	72
		Taper version, ready for Taper clamping bush	75
		Steel with and without hub, pre-bored, partly hardened	88
		Double sprockets for two single-strand chains, pre-bored	91
DIN ISO 20B-1	1 1/4x3/4"	Taper version, ready for Taper clamping bush	75
		Steel with and without hub, pre-bored	89
DIN ISO 24B-1	1 1/2x1"	Taper version, ready for Taper clamping bush	75
		Steel with and without hub, pre-bored	90

Single-strand roller chains see page 35-42, 46-55
Chain tensioners see page 111
Chain-tensioning wheels see page 109-115

Other sizes and sprockets with special design on request.

Overview Sprockets for Roller Chains DIN ISO 606 (ex DIN 8187)



Sprockets for Double-Strand Roller Chains (Duplex-Chains)

	Pitch	Type	Page
DIN ISO 05B-2	8mm	Steel with and without hub, pre-bored	94
DIN ISO 06B-2	3/8x7/32“	Taper version, for taper bush	92
		Steel with and without hub, pre-bored	95
DIN ISO 08B-2	1/2x5/16“	Taper version, for taper bush	92
		Steel with and without hub, pre-bored	96
DIN ISO 10B-2	5/8x3/8“	Taper version, for taper bush	92
		Steel with and without hub, pre-bored	97
DIN ISO 12B-2	3/4x7/16“	Taper version, for taper bush	92
		Steel with and without hub, pre-bored	98
DIN ISO 16B-2	1“x17,02 mm	Taper version, for taper bush	93
		Steel with and without hub, pre-bored	99
DIN ISO 20B-2	1 1/4x3/4“	Taper version, for taper bush	93
		Steel with and without hub, pre-bored	100
DIN ISO 24B-2	1 1/2x1“	Taper version, for taper bush	93
		Steel with and without hub, pre-bored	100

Double-strand roller chains see page 43
Double-strand chain tensioners see page 111
Double-strand chain-tensioning-wheels see page 115



Sprockets for Triple-Strand Roller Chains (Triplex-Chains)

	Pitch	Type	Page
DIN ISO 06B-3	3/8x7/32“	taper version, complete for taper bush	101
		steel with and without hub, pre-bored	102
DIN ISO 08B-3	1/2x5/16“	taper version, complete for taper bush	101
		Steel with and without hub, pre-bored	103
DIN ISO 10B-3	5/8x3/8“	taper version, complete for taper bush	101
		Steel with and without hub, pre-bored	104
DIN ISO 12B-3	3/4x7/16“	taper version, complete for taper bush	101
		Steel with and without hub, pre-bored	105
DIN ISO 16B-3	1“x17,02 mm	taper version, complete for taper bush	101
		Steel with and without hub, pre-bored	106
DIN ISO 20B-3	1 1/4x3/4“	Taper version, for taper bush	101
DIN ISO 24B-3	1 1/2x1“	Taper version, for taper bush	101

Triple-strand roller chains see page 45
Triple-strand chain tensioners see page 112
Triple-strand chain-tensioning-wheel page 115

Other sizes and sprockets with special design on request.



Reworking within 24h-service possible. Custom made parts on request.

Sprockets KRK Made from Polyacetal Resin with One-Sided Hub, Die Cast

Bores ISO H8.
Material specifications see page 821.

Metal inlays at the hub with custom bore, feather keyways or threads for set screw available on request, depending on the amount and size ordered.

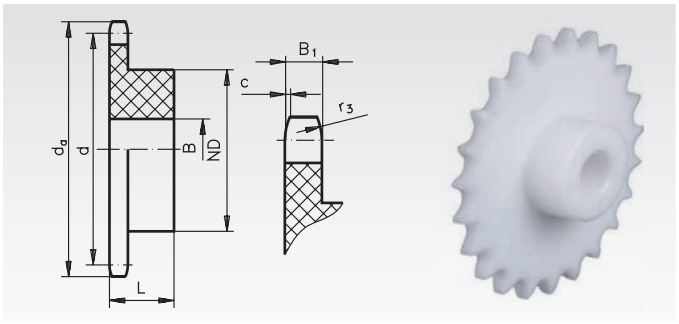

Ordering Details: e.g.: Product No. 100 513 00, KRK, ISO 04, 13 Teeth, Polyacetal Resin

ISO 04, Pitch 6 mm, B_1 = 2.6 mm, c = 0.6 mm, r_3 = 6 mm

Product No.	Number of teeth	d_a mm	d mm	B mm	ND mm	L mm	Weight g
100 513 00	13	27,5	25,05	8	18	10	3
100 515 00	15	31,0	28,86	8	21	10	5
100 517 00	17	35,0	32,65	8	24	13	8
100 519 00	19	39,0	36,44	8	24	13	9
100 521 00	21	42,5	40,25	10	28	13	11
100 523 00	23	46,5	44,06	10	28	13	12
100 525 00	25	50,0	47,87	10	28	13	13

ISO 05 B-1, Pitch 8 mm, B_1 = 2.8 mm, c = 0.8 mm, r_3 = 8 mm

Product No.	Number of teeth	d_a mm	d mm	B mm	ND mm	L mm	Weight g
100 563 00	13	36,5	33,42	8	24	13	8
100 565 00	15	41,5	38,48	8	24	13	9
100 567 00	17	46,5	43,53	10	28	14	13
100 569 00	19	52,0	48,61	10	28	14	14
100 571 00	21	57,0	53,68	10	28	14	15
100 573 00	23	62,5	58,75	10	28	14	17
100 575 00	25	67,0	63,83	10	28	14	19

ISO 06 B-1, Pitch 3/8 x 7/32", B_1 = 5.3 mm, c = 1.0 mm, r_3 = 10 mm

Product No.	Number of teeth	d_a mm	d mm	B mm	ND mm	L mm	Weight g
101 513 00	13	43,0	39,79	8	24	16	13
101 515 00	15	49,0	45,81	8	24	16	16
101 517 00	17	55,5	51,83	10	28	16	20
101 519 00	19	61,5	57,87	10	28	16	24
101 521 00	21	68,0	63,91	12	32	20	33
101 523 00	23	74,0	69,95	12	32	20	38
101 525 00	25	80,0	76,00	12	32	20	44

ISO 081, Pitch 1/2 x 1/8", B_1 = 3 mm, c = 1.3 mm, r_3 = 13 mm

Product No.	Number of teeth	d_a mm	d mm	B mm	ND mm	L mm	Weight g
102 513 00	13	58,0	53,07	8	24	16	15
102 515 00	15	66,0	61,09	8	24	16	18
102 517 00	17	74,0	69,11	10	28	18	25
102 519 00	19	82,0	77,16	10	28	18	29
102 521 00	21	90,5	85,22	12	32	20	39
102 523 00	23	98,5	93,27	12	32	20	46
102 525 00	25	107,0	101,33	12	32	20	51

ISO 083, Pitch 1/2 x 3/16", B_1 = 4 mm, c = 1.3 mm, r_3 = 13 mm

Product No.	Number of teeth	d_a mm	d mm	B mm	ND mm	L mm	Weight g
103 513 00	13	58,0	53,07	8	24	17,4	18
103 515 00	15	66,0	61,09	8	24	17,4	23
103 517 00	17	74,0	69,11	10	28	19,4	31
103 519 00	19	82,0	77,16	10	28	19,4	37
103 521 00	21	90,5	85,22	12	32	21,4	48
103 523 00	23	98,5	93,27	12	32	21,4	56
103 525 00	25	107,0	101,33	12	32	21,4	66

ISO 08 B-1, Pitch 1/2 x 5/16", B_1 = 7.2 mm, c = 1.3 mm, r_3 = 13 mm

Product No.	Number of teeth	d_a mm	d mm	B mm	ND mm	L mm	Weight g
105 513 00	13	58,0	53,07	10	28	20	26
105 515 00	15	66,0	61,09	10	28	20	33
105 517 00	17	74,0	69,11	12	32	25	48
105 519 00	19	82,0	77,16	12	32	25	56
105 521 00	21	90,5	85,22	16	36	25	68
105 523 00	23	98,5	93,27	16	36	25	79
105 525 00	25	107,0	101,33	16	36	25	90

Note regarding pulleys made from polyacetal resin

Inside these injection-moulded parts are some cavities caused by production. These parts should therefore not be drilled too deep. With larger bores or when grooving the cavities might become visible. Normally, this does not affect the functionality.



Reworking within 24h-service possible. Custom made parts on request.

Sprockets KRR Made from Stainless Steel with One-Sided Hub

Material: Stainless steel 1.4305.
Teeth milled, pre-bored.

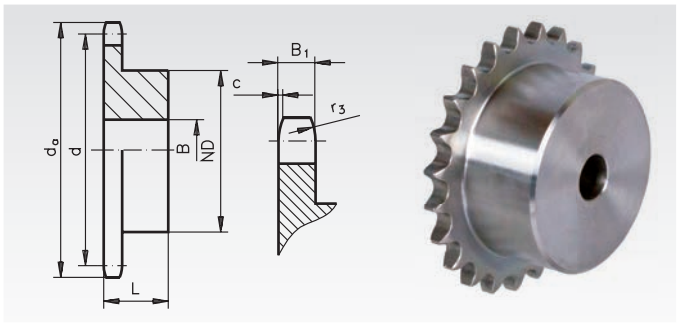

Ordering Details: e.g.: Product No. 100 998 13, Sprocket, ISO 05 B-1, 13 Teeth, Stainless

ISO 05 B-1, Pitch 8 mm, B_1 = 2.8 mm, c = 0.8 mm, r_3 = 8 mm

Product No.	Number of teeth	d_a mm	d mm	ND mm	B mm	L mm	Weight g
100 998 13	13	36,7	33,42	23	8	13	44
100 998 15	15	41,7	38,48	28	8	13	65
100 998 17	17	46,8	43,53	30	8	14	85
100 998 19	19	51,9	48,61	30	8	14	93
100 998 21	21	57,0	53,68	35	8	14	124
100 998 23	23	62,0	58,75	35	8	14	131
100 998 25	25	67,5	63,83	35	8	14	142

ISO 06 B-1, Pitch 3/8 x 7/32", B_1 = 5.3 mm, c = 1.0 mm, r_3 = 10 mm

Product No.	Number of teeth	d_a mm	d mm	ND mm	B mm	L mm	Weight g
101 991 13	13	43,0	39,79	28	10	25	123
101 991 15	15	49,3	45,81	34	10	25	188
101 991 16	16	52,3	48,82	37	10	28	241
101 991 17	17	55,3	51,83	40	10	28	287
101 991 18	18	58,3	54,85	43	10	28	331
101 991 19	19	61,3	57,87	45	10	28	370
101 991 20	20	64,3	60,89	46	10	28	380
101 991 21	21	68,0	63,91	48	12	28	391
101 991 23	23	73,5	69,95	52	12	28	502
101 991 25	25	80,0	76,00	57	12	28	592
101 991 30	30	94,7	91,12	60	12	28	787

ISO 08 B-1, Pitch 1/2 x 5/16", B_1 = 7.2 mm, c = 1.3 mm, r_3 = 13 mm

Product No.	Number of teeth	d_a mm	d mm	ND mm	B mm	L mm	Weight g
105 991 12	12	53,0	49,07	33	10	28	215
105 991 13	13	57,9	53,07	37	10	28	270
105 991 15	15	65,9	61,09	45	10	28	395
105 991 16	16	69,9	65,10	50	12	28	465
105 991 17	17	74,0	69,11	52	12	28	510
105 991 18	18	78,0	73,14	56	12	28	593
105 991 19	19	82,0	77,16	60	12	28	670
105 991 20	20	86,0	81,19	64	12	28	775
105 991 21	21	90,1	85,22	68	14	28	861
105 991 23	23	98,1	93,27	70	14	28	958
105 991 25	25	106,2	101,33	70	14	28	1034
105 991 30	30	126,3	121,50	80	16	30	1480

ISO 10 B-1, Pitch 5/8 x 3/8", B_1 = 9.1 mm, c = 1.6 mm, r_3 = 16 mm

Product No.	Number of teeth	d_a mm	d mm	ND mm	B mm	L mm	Weight g
106 991 13	13	73,0	66,32	47	12	30	482
106 991 14	14	78,0	71,34	52	12	30	570
106 991 15	15	83,0	76,36	57	12	30	695
106 991 16	16	88,0	81,37	60	14	30	757
106 991 17	17	93,0	86,39	60	14	30	812
106 991 18	18	98,3	91,42	70	14	30	1039
106 991 19	19	103,3	96,45	70	14	30	1175
106 991 20	20	108,4	101,49	75	14	30	1228
106 991 21	21	113,4	106,52	75	16	30	1382
106 991 23	23	123,4	116,58	80	16	30	1500
106 991 25	25	134,0	126,66	80	16	30	1620
106 991 30	30	158,8	151,87	90	20	35	2464

ISO 12 B-1, Pitch 3/4 x 7/16", B_1 = 11.1 mm, c = 2 mm, r_3 = 19 mm

Product No.	Number of teeth	d_a mm	d mm	ND mm	B mm	L mm	Weight g
107 991 13	13	87,5	79,59	58	16	35	830
107 991 15	15	99,8	91,63	70	16	35	1190
107 991 16	16	105,5	97,65	75	16	35	1376
107 991 17	17	111,5	103,67	80	16	35	1569
107 991 18	18	118,0	109,71	80	16	35	1653
107 991 19	19	124,2	115,75	80	16	35	1752
107 991 20	20	129,7	121,78	80	16	35	1837
107 991 21	21	136,0	127,82	90	20	40	2398
107 991 23	23	149,0	139,90	90	20	40	2613
107 991 25	25	160,0	152,00	90	20	40	2853

ISO 16 B-1, Pitch 1" x 17.02, B_1 = 16.2 mm, c = 2.5 mm, r_3 = 26 mm

Product No.	Number of teeth	d_a mm	d mm	ND mm	B mm	L mm	Weight g
108 991 13	13	117,0	106,12	78	16	40	1830
108 991 15	15	133,0	122,17	92	16	40	2527
108 991 16	16	141,0	130,20	100	20	45	3218
108 991 17	17	149,0	138,22	100	20	45	3417
108 991 18	18	157,0	146,28	100	20	45	3642
108 991 19	19	165,2	154,33	100	20	45	3882
108 991 20	20	173,2	162,38	100	20	45	4102
108 991 21	21	181,2	170,43	110	20	50	5121



Reworking within 24h-service possible. Custom made parts on request.

Sprockets KRF, Teeth Hardened, ISO 06 B-1, Pitch 3/8 x 7/32"

Material: Steel C45.

Ready-to-install, for various shaft diameters.

Teeth milled and induction hardened (approx. HRC 50), custom bore H7 - surface parameter R_a 1.6, keyway in accordance with DIN 6885/1 positioned beneath tip of tooth, 2 threads for set screws, one positioned for the keyway, one offset by 90°.

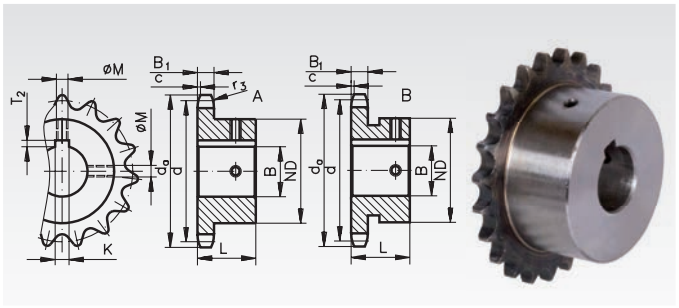

Ordering Details: e.g.: Product No. 101 810 12, Sprocket KRF, ISO 06 B-1, 10 Teeth, 12 mm Bore

ISO 06 B-1, Pitch 3/8 x 7/32", B_1 = 5.3 mm, c = 1.0 mm, r_3 = 10 mm

Product No.	Number of teeth	Bore mm	Type	d_a mm	d mm	ND mm	L mm	K mm	T_2 mm	M	Weight kg
101 810 12	10	12	B	34,5	30,82	26	20	4	1,8	M4	0,066
101 810 14	10	14	B	34,5	30,82	29	20	5	2,3	M4	0,068
101 811 14	11	14	B	37,5	33,80	29	25	5	2,3	M4	0,144
101 811 15	11	15	B	37,5	33,80	30	25	5	2,3	M4	0,088
101 812 12	12	12	B	40,5	36,80	26	25	4	1,8	M4	0,102
101 812 14	12	14	B	40,5	36,80	29	25	5	2,3	M4	0,108
101 812 15	12	15	B	40,5	36,80	30	25	5	2,3	M4	0,110
101 813 14	13	14	A	43,5	39,80	28	25	5	2,3	M4	0,116
101 813 15	13	15	A	43,5	39,80	28	25	5	2,3	M4	0,110
101 814 14	14	14	A	46,5	42,80	31	25	5	2,3	M4	0,144
101 814 15	14	15	A	46,5	42,80	31	25	5	2,3	M4	0,140
101 814 16	14	16	A	46,5	42,80	31	25	5	2,3	M4	0,134
101 814 19	14	19	B	46,5	42,80	35	25	6	2,8	M5	0,142
101 815 14	15	14	A	49,5	45,81	34	25	5	2,3	M4	0,174
101 815 15	15	15	A	49,5	45,81	34	25	5	2,3	M4	0,170
101 815 20	15	20	A	49,5	45,81	34	25	6	2,8	M5	0,142
101 815 24	15	24	B	49,5	45,81	42	25	8	3,3	M6	0,168
101 815 25	15	25	B	49,5	45,81	42	25	8	3,3	M6	0,160
101 816 15	16	15	A	52,5	48,82	37	28	5	2,3	M4	0,228
101 816 18	16	18	A	52,5	48,82	37	28	6	2,8	M5	0,212
101 816 20	16	20	A	52,5	48,82	37	28	6	2,8	M5	0,188
101 816 25	16	25	B	52,5	48,82	42	28	8	3,3	M6	0,202
101 817 14	17	14	A	55,5	51,83	40	28	5	2,3	M4	0,274
101 817 16	17	16	A	55,5	51,83	40	28	5	2,3	M4	0,266
101 817 20	17	20	A	55,5	51,83	40	28	6	2,8	M5	0,238
101 817 24	17	24	B	55,5	51,83	46	28	8	3,3	M6	0,262
101 817 25	17	25	B	55,5	51,83	46	28	8	3,3	M6	0,256
101 818 14	18	14	A	58,6	54,85	40	28	5	2,3	M4	0,286
101 818 16	18	16	A	58,6	54,85	43	28	5	2,3	M4	0,310
101 818 20	18	20	A	58,6	54,85	43	28	6	2,8	M5	0,282

Tolerances

Bore
from 12 mm to 18 mm: +0.018 / -0
from 19 mm to 30 mm: +0.021 / -0
from 32 mm to 50 mm: +0.025 / -0

Keyway width
from 4 mm to 6 mm: +0.030 / -0
from 8 mm to 10 mm: +0.036 / -0
from 12 mm to 14 mm: +0.043 / -0

Keyway depth
from 1.8 mm to 2.8 mm: +0.10 / -0
from 3.3 mm to 3.8 mm: +0.20 / -0

Sprockets KRF, Teeth Hardened, ISO 06 B-1, Pitch 3/8 x 7/32"

Material: Steel C45.

Ready-to-install, for various shaft diameters.

Teeth milled and induction hardened (approx. HRC 50), custom bore H7 - surface parameter R_a 1.6, keyway in accordance with DIN 6885/1 positioned beneath tip of tooth, 2 threads for set screws, one positioned for the keyway, one offset by 90°.

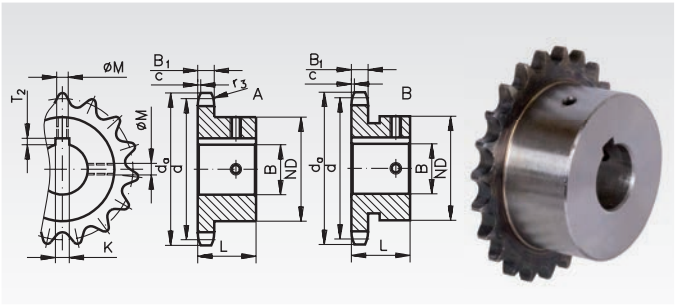

Ordering Details: e.g.: Product No. 101 818 24, Sprocket KRF, ISO 06 B-1, 18 Teeth, 24 mm Bore

ISO 06 B-1, Pitch 3/8 x 7/32", B_1 = 5.3 mm, c = 1.0 mm, r_3 = 10 mm

Product No.	Number of teeth	Bore mm	Type	d_a mm	d mm	ND mm	L mm	K mm	T_2 mm	M	Weight kg
101 818 24	18	24	A	58,6	54,85	43	28	8	3,3	M6	0,252
101 818 25	18	25	A	58,6	54,85	43	28	8	3,3	M6	0,242
101 819 12	19	12	A	61,6	57,87	40	28	4	1,8	M4	0,304
101 819 14	19	14	A	61,6	57,87	40	28	5	2,3	M4	0,286
101 819 15	19	15	A	61,6	57,87	45	28	5	2,3	M4	0,350
101 819 20	19	20	A	61,6	57,87	45	28	6	2,8	M5	0,318
101 819 25	19	25	A	61,6	57,87	45	28	8	3,3	M6	0,276
101 820 14	20	14	A	64,6	60,89	40	28	5	2,3	M4	0,306
101 820 20	20	20	A	64,6	60,89	46	28	6	2,8	M5	0,340
101 820 24	20	24	A	64,6	60,89	46	28	8	3,3	M6	0,308
101 820 25	20	25	A	64,6	60,89	46	28	8	3,3	M6	0,300
101 821 15	21	15	A	67,6	63,91	48	28	5	2,3	M4	0,408
101 821 20	21	20	A	67,6	63,91	48	28	6	2,8	M5	0,380
101 821 24	21	24	A	67,6	63,91	48	28	8	3,3	M6	0,348
101 821 25	21	25	A	67,6	63,91	48	28	8	3,3	M6	0,340
101 822 20	22	20	A	70,6	66,93	50	28	6	2,8	M5	0,424
101 822 24	22	24	A	70,6	66,93	50	28	8	3,3	M6	0,384
101 822 25	22	25	A	70,6	66,93	50	28	8	3,3	M6	0,382
101 823 20	23	20	A	73,7	69,95	52	28	6	2,8	M5	0,464
101 823 25	23	25	A	73,7	69,95	52	28	8	3,3	M6	0,420
101 824 20	24	20	A	76,7	72,97	54	28	6	2,8	M5	0,508
101 824 25	24	25	A	76,7	72,97	54	28	8	3,3	M6	0,466
101 824 30	24	30	A	76,7	72,97	54	28	8	3,3	M6	0,422
101 825 20	25	20	A	79,7	76,00	57	28	6	2,8	M5	0,568
101 825 22	25	22	A	79,7	76,00	57	28	6	2,8	M5	0,550
101 825 25	25	25	A	79,7	76,00	57	28	8	3,3	M6	0,524
101 825 30	25	30	A	79,7	76,00	57	28	8	3,3	M6	0,478
101 830 20	30	20	A	94,8	91,12	60	30	6	2,8	M5	0,746
101 830 25	30	25	A	94,8	91,12	60	30	8	3,3	M6	0,704
101 830 30	30	30	A	94,8	91,12	60	30	8	3,3	M6	0,656

Tolerances

Bore
from 12 mm to 18 mm: +0.018 / -0
from 19 mm to 30 mm: +0.021 / -0
from 32 mm to 50 mm: +0.025 / -0

Keyway Width
from 4 mm to 6 mm: +0.030 / -0
from 8 mm to 10 mm: +0.036 / -0
from 12 mm to 14 mm: +0.043 / -0

Keyway depth
from 1.8 mm to 2.8 mm: +0.10 / -0
from 3.3 mm to 3.8 mm: +0.20 / -0

Sprockets KRF, Teeth Hardened, ISO 08 B-1, Pitch 1/2 x 5/16"

Material: Steel C45.

Ready-to-install, for various shaft diameters.

Teeth milled and induction hardened (approx. HRC 50), custom bore H7 - surface parameter R_a 1.6, keyway in accordance with DIN 6885/1 positioned beneath tip of tooth, 2 threads for set screws, one positioned for the keyway, one offset by 90°.

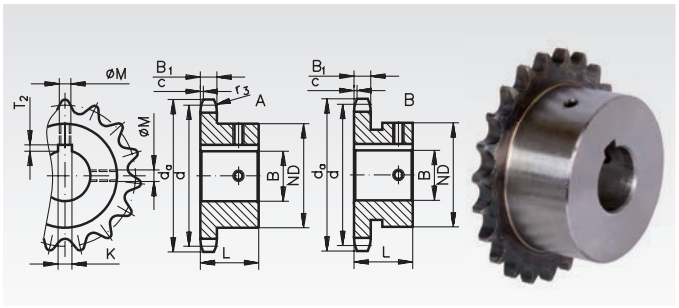

Ordering Details: e.g.: Product No. 105 810 15, Sprocket KRF, ISO 08 B-1, 10 Teeth, 15 mm Bore

ISO 08 B-1, Pitch 1/2 x 5/16", B_1 = 7.2 mm, c = 1.3 mm, r_3 = 13 mm

Product No.	Number of teeth	Bore mm	Type	d_a mm	d mm	ND mm	L mm	K mm	T_2 mm	M	Weight kg
105 810 15	10	15	B	45,90	41,10	31	25	5	2,3	M4	0,126
105 810 16	10	16	B	45,90	41,10	31	25	5	2,3	M4	0,118
105 811 14	11	14	A	49,90	45,07	29	25	5	2,3	M4	0,142
105 811 15	11	15	B	49,90	45,07	31	25	5	2,3	M4	0,146
105 811 16	11	16	B	49,90	45,07	31	25	5	2,3	M4	0,140
105 811 18	11	18	B	49,90	45,07	37	25	6	2,8	M5	0,158
105 812 15	12	15	A	53,90	49,07	33	28	5	2,3	M4	0,200
105 812 16	12	16	A	53,90	49,07	33	28	5	2,3	M4	0,184
105 812 18	12	18	A	53,90	49,07	33	28	6	2,8	M5	0,174
105 812 20	12	20	A	53,90	49,07	33	28	6	2,8	M5	0,166
105 812 25	12	25	B	53,90	49,07	42	28	8	3,3	M6	0,180
105 813 16	13	16	A	57,90	53,07	37	28	5	2,3	M4	0,246
105 813 20	13	20	A	57,90	53,07	37	28	6	2,8	M5	0,220
105 813 25	13	25	B	57,90	53,07	42	28	8	3,3	M6	0,216
105 813 28	13	28	B	57,90	53,07	45	28	8	3,3	M6	0,212
105 814 16	14	16	A	61,90	57,07	41	28	5	2,3	M4	0,304
105 814 19	14	19	A	61,90	57,07	41	28	6	2,8	M5	0,284
105 814 20	14	20	A	61,90	57,07	41	28	6	2,8	M5	0,276
105 814 25	14	25	A	61,90	57,07	41	28	8	3,3	M6	0,236
105 814 28	14	28	B	61,90	57,07	48	28	8	3,3	M6	0,266
105 815 16	15	16	A	65,90	61,09	45	28	5	2,3	M4	0,366
105 815 19	15	19	A	65,90	61,09	45	28	6	2,8	M5	0,348
105 815 20	15	20	A	65,90	61,09	45	28	6	2,8	M5	0,340
105 815 24	15	24	A	65,90	61,09	45	28	8	3,3	M6	0,308
105 815 25	15	25	A	65,90	61,09	45	28	8	3,3	M6	0,300
105 815 28	15	28	A	65,90	61,09	45	28	8	3,3	M6	0,272
105 815 30	15	30	B	65,90	61,09	52	28	8	3,3	M6	0,316
105 816 18	16	18	A	69,90	65,10	50	28	6	2,8	M5	0,438
105 816 20	16	20	A	69,90	65,10	50	28	6	2,8	M5	0,426
105 816 24	16	24	A	69,90	65,10	50	28	8	3,3	M6	0,382
105 816 25	16	25	A	69,90	65,10	50	28	8	3,3	M6	0,382
105 816 30	16	30	A	69,90	65,10	50	28	8	3,3	M6	0,336
105 817 18	17	18	A	74,00	69,11	52	28	6	2,8	M5	0,486
105 817 19	17	19	A	74,00	69,11	52	28	6	2,8	M5	0,482
105 817 20	17	20	A	74,00	69,11	52	28	6	2,8	M5	0,472
105 817 24	17	24	A	74,00	69,11	52	28	8	3,3	M6	0,438
105 817 25	17	25	A	74,00	69,11	52	28	8	3,3	M6	0,428
105 817 28	17	28	A	74,00	69,11	52	28	8	3,3	M6	0,402
105 817 30	17	30	A	74,00	69,11	52	28	8	3,3	M6	0,388
105 818 18	18	18	A	78,00	73,14	52	28	6	2,8	M5	0,510
105 818 20	18	20	A	78,00	73,14	56	28	6	2,8	M5	0,550
105 818 24	18	24	A	78,00	73,14	56	28	8	3,3	M6	0,516

Tolerances

Bore
from 12 mm to 18 mm: +0.018 / -0
from 19 mm to 30 mm: +0.021 / -0
from 32 mm to 50 mm: +0.025 / -0

Keyway width
from 4 mm to 6 mm: +0.030 / -0
from 8 mm to 10 mm: +0.036 / -0
from 12 mm to 14 mm: +0.043 / -0

Keyway depth
from 1.8 mm to 2.8 mm: +0.10 / -0
from 3.3 mm to 3.8 mm: +0.20 / -0

Sprockets KRF, Teeth Hardened, ISO 08 B-1, Pitch 1/2 x 5/16"

Material: Steel C45.

Ready-to-install, for various shaft diameters.

Teeth milled and induction hardened (approx. HRC 50), custom bore H7 - surface parameter R_a 1.6, keyway in accordance with DIN 6885/1 positioned beneath tip of tooth, 2 threads for set screws, one positioned for the keyway, one offset by 90°.

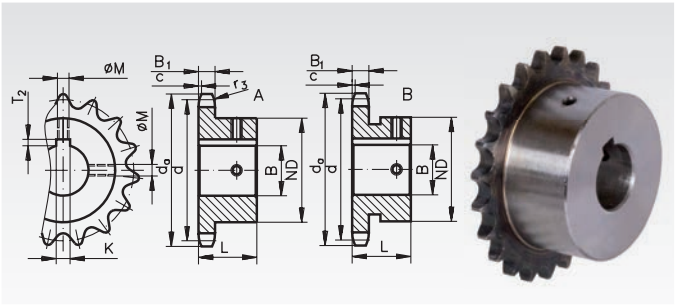

Ordering Details: e.g.: Product No. 105 818 25, Sprocket KRF, ISO 08 B-1, 18 Teeth, 25 mm Bore

ISO 08 B-1, Pitch 1/2 x 5/16", B_1 = 7.2 mm, c = 1.3 mm, r_3 = 13 mm

Product No.	Number of teeth	Bore mm	Type	d_a mm	d mm	ND mm	L mm	K mm	T_2 mm	M	Weight kg
105 818 25	18	25	A	78,00	73,14	56	28	8	3,3	M6	0,510
105 818 30	18	30	A	78,00	73,14	56	28	8	3,3	M6	0,464
105 818 35	18	35	A	78,00	73,14	56	28	10	3,3	M8	0,406
105 819 20	19	20	A	82,00	77,16	60	28	6	2,8	M5	0,636
105 819 25	19	25	A	82,00	77,16	60	28	8	3,3	M6	0,584
105 819 30	19	30	A	82,00	77,16	60	28	8	3,3	M6	0,548
105 819 35	19	35	A	82,00	77,16	60	28	10	3,3	M8	0,488
105 820 18	20	18	A	86,00	81,19	55	28	6	2,8	M5	0,614
105 820 20	20	20	A	86,00	81,19	64	28	6	2,8	M5	0,740
105 820 24	20	24	A	86,00	81,19	64	28	8	3,3	M6	0,710
105 820 25	20	25	A	86,00	81,19	64	28	8	3,3	M6	0,700
105 820 28	20	28	A	86,00	81,19	64	28	8	3,3	M6	0,672
105 820 30	20	30	A	86,00	81,19	64	28	8	3,3	M6	0,652
105 820 35	20	35	A	86,00	81,19	64	28	10	3,3	M8	0,610
105 821 20	21	20	A	90,10	85,22	60	28	6	2,8	M5	0,702
105 821 25	21	25	A	90,10	85,22	68	28	8	3,3	M6	0,782
105 821 30	21	30	A	90,10	85,22	68	28	8	3,3	M6	0,750
105 821 35	21	35	A	90,10	85,22	68	28	10	3,3	M8	0,686
105 822 20	22	20	A	94,10	89,24	65	28	6	2,8	M5	0,816
105 822 25	22	25	A	94,10	89,24	70	28	8	3,3	M6	0,858
105 822 30	22	30	A	94,10	89,24	70	28	8	3,3	M6	0,808
105 822 35	22	35	A	94,10	89,24	70	28	10	3,3	M8	0,754
105 823 20	23	20	A	98,10	93,27	65	28	6	2,8	M5	0,848
105 823 25	23	25	A	98,10	93,27	70	28	8	3,3	M6	0,884
105 823 30	23	30	A	98,10	93,27	70	28	8	3,3	M6	0,844
105 823 35	23	35	A	98,10	93,27	70	28	10	3,3	M8	0,780
105 824 20	24	20	A	102,10	97,29	65	28	6	2,8	M5	0,880
105 824 25	24	25	A	102,10	97,29	70	28	8	3,3	M6	0,830
105 824 28	24	28	A	102,10	97,29	70	28	8	3,3	M6	0,804
105 824 30	24	30	A	102,10	97,29	70	28	8	3,3	M6	0,882
105 824 35	24	35	A	102,10	97,29	70	28	10	3,3	M8	0,824
105 825 20	25	20	A	106,20	101,33	65	28	6	2,8	M5	0,820
105 825 24	25	24	A	106,20	101,33	70	28	8	3,3	M6	0,872
105 825 25	25	25	A	106,20	101,33	70	28	8	3,3	M6	0,868
105 825 28	25	28	A	106,20	101,33	70	28	8	3,3	M6	0,842
105 825 30	25	30	A	106,20	101,33	70	28	8	3,3	M6	0,824
105 825 35	25	35	A	106,20	101,33	70	28	10	3,3	M8	0,864
105 830 25	30	25	A	126,30	121,50	75	30	8	3,3	M6	1,314
105 830 28	30	28	A	126,30	121,50	75	30	8	3,3	M6	1,284
105 830 30	30	30	A	126,30	121,50	80	30	8	3,3	M6	1,366
105 830 35	30	35	A	126,30	121,50	80	30	10	3,3	M8	1,314

Tolerances

Bore
from 12 mm to 18 mm: +0.018 / -0
from 19 mm to 30 mm: +0.021 / -0
from 32 mm to 50 mm: +0.025 / -0

Keyway width
from 4 mm to 6 mm: +0.030 / -0
from 8 mm to 10 mm: +0.036 / -0
from 12 mm to 14 mm: +0.043 / -0

Keyway depth
from 1.8 mm to 2.8 mm: +0.10 / -0
from 3.3 mm to 3.8 mm: +0.20 / -0

Sprockets KRF, Teeth Hardened, ISO 10 B-1, Pitch 5/8 x 3/8“

Material: Steel C45.

Ready-to-install, for various shaft diameters.

Teeth milled and induction hardened (approx. HRC 50), custom bore H7 - surface parameter R_a 1.6, keyway in accordance with DIN 6885/1 positioned beneath tip of tooth, 2 threads for set screws, one positioned for the keyway, one offset by 90°.

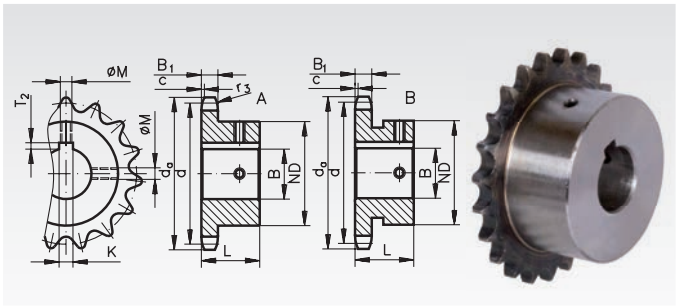

Ordering Details: e.g.: Product No. 106 810 18, Sprocket KRF, ISO 10 B-1, 10 Teeth, 18 mm Bore

ISO 10 B-1, Pitch 5/8 x 3/8“, B_1 = 9.1 mm, c = 1.6 mm, r_3 = 16 mm

Product No.	Number of teeth	Bore mm	Type	d_a mm	d mm	ND mm	L mm	K mm	T_2 mm	M	Weight kg
106 810 18	10	18	A	58,3	51,37	35	25	6	2,8	M5	0,202
106 810 19	10	19	A	58,3	51,37	35	25	6	2,8	M5	0,186
106 810 20	10	20	A	58,3	51,37	35	25	6	2,8	M5	0,184
106 811 20	11	20	A	63,2	56,34	37	30	6	2,8	M5	0,260
106 811 25	11	25	B	63,2	56,34	47	30	8	3,3	M6	0,280
106 812 20	12	20	A	68,2	61,34	42	30	6	2,8	M5	0,344
106 812 25	12	25	A	68,2	61,34	42	30	8	3,3	M6	0,300
106 812 30	12	30	B	68,2	61,34	51	30	8	3,3	M6	0,322
106 813 18	13	18	A	73,2	66,32	47	30	6	2,8	M5	0,450
106 813 20	13	20	A	73,2	66,32	47	30	6	2,8	M5	0,436
106 813 25	13	25	A	73,2	66,32	47	30	8	3,3	M6	0,380
106 813 30	13	30	A	73,2	66,32	47	30	8	3,3	M6	0,340
106 814 20	14	20	A	78,2	71,34	52	30	6	2,8	M5	0,534
106 814 25	14	25	A	78,2	71,34	52	30	8	3,3	M6	0,480
106 814 30	14	30	A	78,2	71,34	52	30	8	3,3	M6	0,436
106 815 20	15	20	A	83,2	76,36	57	30	6	2,8	M5	0,646
106 815 24	15	24	A	83,2	76,36	57	30	8	3,3	M6	0,606
106 815 25	15	25	A	83,2	76,36	57	30	8	3,3	M6	0,588
106 815 30	15	30	A	83,2	76,36	57	30	8	3,3	M6	0,550
106 815 35	15	35	A	83,2	76,36	57	30	10	3,3	M8	0,486
106 816 20	16	20	A	88,3	81,37	60	30	6	2,8	M5	0,742
106 816 24	16	24	A	88,3	81,37	60	30	8	3,3	M6	0,708
106 816 25	16	25	A	88,3	81,37	60	30	8	3,3	M6	0,688
106 816 30	16	30	A	88,3	81,37	60	30	8	3,3	M6	0,646
106 816 35	16	35	A	88,3	81,37	60	30	10	3,3	M8	0,578
106 817 20	17	20	A	93,3	86,39	60	30	6	2,8	M5	0,784
106 817 25	17	25	A	93,3	86,39	60	30	8	3,3	M6	0,738
106 817 30	17	30	A	93,3	86,39	60	30	8	3,3	M6	0,684
106 817 35	17	35	A	93,3	86,39	60	30	10	3,3	M8	0,630
106 818 20	18	20	A	98,3	91,42	60	30	6	2,8	M5	0,834
106 818 25	18	25	A	98,3	91,42	70	30	8	3,3	M6	0,854
106 818 30	18	30	A	98,3	91,42	70	30	8	3,3	M6	0,810
106 818 35	18	35	A	98,3	91,42	70	30	10	3,3	M8	0,840
106 818 40	18	40	A	98,3	91,42	70	30	12	3,3	M10	0,772

Tolerances

Bore
from 12 mm to 18 mm: +0.018 / -0
from 19 mm to 30 mm: +0.021 / -0
from 32 mm to 50 mm: +0.025 / -0

Keyway width
from 4 mm to 6 mm: +0.030 / -0
from 8 mm to 10 mm: +0.036 / -0
from 12 mm to 14 mm: +0.043 / -0

Keyway depth
from 1.8 mm to 2.8 mm: +0.10 / -0
from 3.3 mm to 3.8 mm: +0.20 / -0

Sprockets KRF, Teeth Hardened, ISO 10 B-1, Pitch 5/8 x 3/8"

Material: Steel C45.

Ready-to-install, for various shaft diameters.

Teeth milled and induction hardened (approx. HRC 50), custom bore H7 - surface parameter R_a 1.6, keyway in accordance with DIN 6885/1 positioned beneath tip of tooth, 2 threads for set screws, one positioned for the keyway, one offset by 90°.

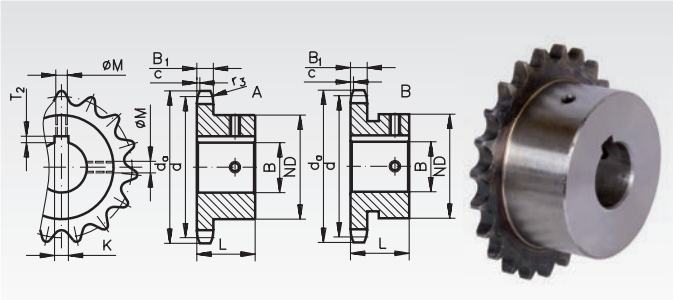

Ordering Details: e.g.: Product No. 106 819 20, Sprocket KRF, ISO 10 B-1, 19 Teeth, 20 mm Bore

ISO 10 B-1, Pitch 5/8 x 3/8", B_1 = 9.1 mm, c = 1.6 mm, r_3 = 16 mm

Product No.	Number of teeth	Bore mm	Type	d_a mm	d mm	ND mm	L mm	K mm	T_2 mm	M	Weight kg
106 819 20	19	20	A	103,3	96,45	60	30	6	2,8	M5	0,800
106 819 25	19	25	A	103,3	96,45	70	30	8	3,3	M6	1,020
106 819 30	19	30	A	103,3	96,45	70	30	8	3,3	M6	0,870
106 819 35	19	35	A	103,3	96,45	70	30	10	3,3	M8	0,808
106 819 40	19	40	A	103,3	96,45	70	30	12	3,3	M10	0,834
106 820 20	20	20	A	108,4	101,49	65	30	6	2,8	M5	1,036
106 820 25	20	25	A	108,4	101,49	70	30	8	3,3	M6	1,070
106 820 30	20	30	A	108,4	101,49	75	30	8	3,3	M6	1,116
106 820 35	20	35	A	108,4	101,49	75	30	10	3,3	M8	1,052
106 820 40	20	40	A	108,4	101,49	75	30	12	3,3	M10	0,880
106 821 20	21	20	A	113,4	106,52	65	30	6	2,8	M5	1,084
106 821 25	21	25	A	113,4	106,52	70	30	8	3,3	M6	1,124
106 821 30	21	30	A	113,4	106,52	75	30	8	3,3	M6	1,168
106 821 35	21	35	A	113,4	106,52	75	30	10	3,3	M8	1,106
106 821 40	21	40	A	113,4	106,52	75	30	12	3,3	M10	1,032
106 822 20	22	20	A	118,4	111,55	65	30	6	2,8	M5	1,140
106 822 25	22	25	A	118,4	111,55	70	30	8	3,3	M6	1,186
106 822 30	22	30	A	118,4	111,55	80	30	8	3,3	M6	1,322
106 822 35	22	35	A	118,4	111,55	80	30	10	3,3	M8	1,264
106 822 40	22	40	A	118,4	111,55	80	30	12	3,3	M10	1,184
106 823 20	23	20	A	123,5	116,58	65	30	6	2,8	M5	1,216
106 823 25	23	25	A	123,5	116,58	70	30	8	3,3	M6	1,250
106 823 30	23	30	A	123,5	116,58	80	30	8	3,3	M6	1,382
106 823 35	23	35	A	123,5	116,58	80	30	10	3,3	M8	1,332
106 823 40	23	40	A	123,5	116,58	80	30	12	3,3	M10	1,258
106 824 20	24	20	A	128,5	121,62	65	30	6	2,8	M5	1,278
106 824 25	24	25	A	128,5	121,62	70	30	8	3,3	M6	1,328
106 824 30	24	30	A	128,5	121,62	80	30	8	3,3	M6	1,454
106 824 35	24	35	A	128,5	121,62	80	30	10	3,3	M8	1,388
106 824 40	24	40	A	128,5	121,62	80	30	12	3,3	M10	1,328
106 825 20	25	20	A	133,6	126,66	65	30	6	2,8	M5	1,352
106 825 25	25	25	A	133,6	126,66	70	30	8	3,3	M6	1,388
106 825 30	25	30	A	133,6	126,66	80	30	8	3,3	M6	1,530
106 825 35	25	35	A	133,6	126,66	80	30	10	3,3	M8	1,472
106 825 40	25	40	A	133,6	126,66	80	30	12	3,3	M10	1,400

Tolerances

Bore
from 12 mm to 18 mm: +0.018 / -0
from 19 mm to 30 mm: +0.021 / -0
from 32 mm to 50 mm: +0.025 / -0

Keyway width
from 4 mm to 6 mm: +0.030 / -0
from 8 mm to 10 mm: +0.036 / -0
from 12 mm to 14 mm: +0.043 / -0

Keyway depth
from 1.8 mm to 2.8 mm: +0.10 / -0
from 3.3 mm to 3.8 mm: +0.20 / -0

Sprockets KRF, Teeth Hardened, ISO 12 B-1, Pitch 3/4 x 7/16"

Material: Steel C45.

Ready-to-install, for various shaft diameters.

Teeth milled and induction hardened (approx. HRC 50), custom bore H7 - surface parameter R_a 1.6, keyway in accordance with DIN 6885/1 positioned beneath tip of tooth, 2 threads for set screws, one positioned for the keyway, one offset by 90°.

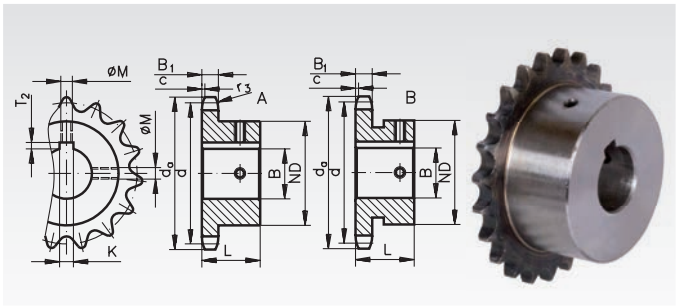

Ordering Details: e.g.: Product No. 107 810 20, Sprocket KRF, ISO 12 B-1, 10 Teeth, 20 mm Bore

ISO 12 B-1, Pitch 3/4 x 7/16", B_1 = 11.1 mm, c = 2 mm, r_3 = 19 mm

Product No.	Number of teeth	Bore mm	Type	d_a mm	d mm	ND mm	L mm	K mm	T_2 mm	M	Weight kg
107 810 20	10	20	A	69,8	61,64	42	30	6	2,8	M5	0,358
107 810 25	10	25	A	69,8	61,64	42	30	8	3,3	M6	0,316
107 811 20	11	20	A	75,8	67,61	46	35	6	2,8	M5	0,504
107 811 25	11	25	A	75,8	67,61	46	35	8	3,3	M6	0,452
107 812 20	12	20	A	81,8	73,60	52	35	6	2,8	M5	0,656
107 812 25	12	25	A	81,8	73,60	52	35	8	3,3	M6	0,604
107 812 30	12	30	A	81,8	73,60	52	35	8	3,3	M6	0,546
107 812 35	12	35	A	81,8	73,60	56	35	10	3,3	M8	0,536
107 813 20	13	20	A	87,8	79,59	58	35	6	2,8	M5	0,812
107 813 25	13	25	A	87,8	79,59	58	35	8	3,3	M6	0,758
107 813 30	13	30	A	87,8	79,59	58	35	8	3,3	M6	0,688
107 813 35	13	35	A	87,8	79,59	58	35	10	3,3	M8	0,624
107 814 20	14	20	A	93,8	85,61	60	35	6	2,8	M5	0,806
107 814 24	14	24	A	93,8	85,61	64	35	8	3,3	M6	0,836
107 814 25	14	25	A	93,8	85,61	64	35	8	3,3	M6	0,830
107 814 28	14	28	A	93,8	85,61	64	35	8	3,3	M6	0,888
107 814 30	14	30	A	93,8	85,61	64	35	8	3,3	M6	0,800
107 814 35	14	35	A	93,8	85,61	64	35	10	3,3	M8	0,786
107 815 20	15	20	A	99,8	91,63	65	35	6	2,8	M5	1,076
107 815 25	15	25	A	99,8	91,63	70	35	8	3,3	M6	1,126
107 815 28	15	28	A	99,8	91,63	70	35	8	3,3	M6	1,080
107 815 30	15	30	A	99,8	91,63	70	35	8	3,3	M6	1,064
107 815 35	15	35	A	99,8	91,63	70	35	10	3,3	M8	0,880
107 815 40	15	40	A	99,8	91,63	70	35	12	3,3	M10	0,808
107 816 20	16	20	A	105,8	97,65	65	35	6	2,8	M5	1,154
107 816 24	16	24	A	105,8	97,65	70	35	8	3,3	M6	1,216
107 816 25	16	25	A	105,8	97,65	70	35	8	3,3	M6	1,188
107 816 30	16	30	A	105,8	97,65	75	35	8	3,3	M6	1,248
107 816 35	16	35	A	105,8	97,65	75	35	10	3,3	M8	1,160
107 816 40	16	40	A	105,8	97,65	75	35	12	3,3	M10	1,080
107 817 25	17	25	A	111,9	103,67	70	35	8	3,3	M6	1,280
107 817 30	17	30	A	111,9	103,67	80	35	8	3,3	M6	1,434
107 817 35	17	35	A	111,9	103,67	80	35	10	3,3	M8	1,372
107 817 40	17	40	A	111,9	103,67	80	35	12	3,3	M10	1,278
107 818 25	18	25	A	117,9	109,71	70	35	8	3,3	M6	1,368
107 818 30	18	30	A	117,9	109,71	80	35	8	3,3	M6	1,520
107 818 35	18	35	A	117,9	109,71	80	35	10	3,3	M8	1,450
107 818 40	18	40	A	117,9	109,71	80	35	12	3,3	M10	1,364

Tolerances

Bore
from 12 mm to 18 mm: +0.018 / -0
from 19 mm to 30 mm: +0.021 / -0
from 32 mm to 50 mm: +0.025 / -0

Keyway width
from 4 mm to 6 mm: +0.030 / -0
from 8 mm to 10 mm: +0.036 / -0
from 12 mm to 14 mm: +0.043 / -0

Keyway depth
from 1.8 mm to 2.8 mm: +0.10 / -0
from 3.3 mm to 3.8 mm: +0.20 / -0

Sprockets KRF, Teeth Hardened, ISO 12 B-1, Pitch 3/4 x 7/16"

Material: Steel C45.

Ready-to-install, for various shaft diameters.

Teeth milled and induction hardened (approx. HRC 50), custom bore H7 - surface parameter R_a 1.6, keyway in accordance with DIN 6885/1 positioned beneath tip of tooth, 2 threads for set screws, one positioned for the keyway, one offset by 90°.

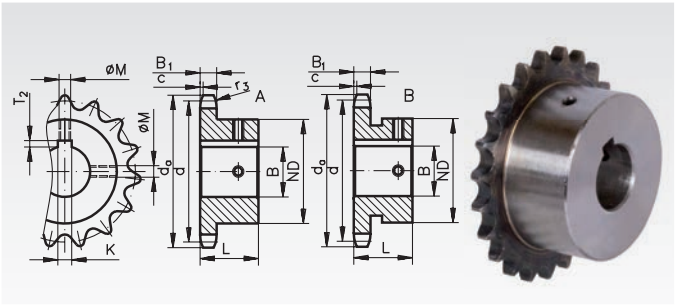

Ordering Details: e.g.: Product No. 107 819 25, Sprocket KRF, ISO 12 B-1, 19 Teeth, 25 mm Bore

ISO 12 B-1, Pitch 3/4 x 7/16", B_1 = 11.1 mm, c = 2 mm, r_3 = 19 mm

Product No.	Number of teeth	Bore mm	Type	d_a mm	d mm	ND mm	L mm	K mm	T_2 mm	M	Weight kg
107 819 25	19	25	A	123,9	115,75	70	35	8	3,3	M6	1,448
107 819 30	19	30	A	123,9	115,75	80	35	8	3,3	M6	1,618
107 819 35	19	35	A	123,9	115,75	80	35	10	3,3	M8	1,534
107 819 40	19	40	A	123,9	115,75	80	35	12	3,3	M10	1,460
107 819 50	19	50	A	123,9	115,75	80	35	14	3,8	M12	1,254
107 820 25	20	25	A	130,0	121,78	70	35	8	3,3	M6	1,542
107 820 30	20	30	A	130,0	121,78	80	35	8	3,3	M6	1,716
107 820 35	20	35	A	130,0	121,78	80	35	10	3,3	M8	1,634
107 820 40	20	40	A	130,0	121,78	80	35	12	3,3	M10	1,554
107 820 45	20	45	A	130,0	121,78	80	35	14	3,8	M12	1,450
107 820 50	20	50	A	130,0	121,78	80	35	14	3,8	M12	1,362
107 821 25	21	25	A	136,0	127,82	70	40	8	3,3	M6	1,782
107 821 30	21	30	A	136,0	127,82	80	40	8	3,3	M6	1,868
107 821 35	21	35	A	136,0	127,82	90	40	10	3,3	M8	2,180
107 821 40	21	40	A	136,0	127,82	90	40	12	3,3	M10	2,082
107 821 45	21	45	A	136,0	127,82	90	40	14	3,8	M12	1,878
107 821 50	21	50	A	136,0	127,82	90	40	14	3,8	M12	1,872
107 822 25	22	25	A	142,0	133,86	70	40	8	3,3	M6	1,804
107 822 30	22	30	A	142,0	133,86	80	40	8	3,3	M6	2,086
107 822 35	22	35	A	142,0	133,86	90	40	10	3,3	M8	2,312
107 822 40	22	40	A	142,0	133,86	90	40	12	3,3	M10	2,208
107 822 50	22	50	A	142,0	133,86	90	40	14	3,8	M12	1,886
107 823 25	23	25	A	148,1	139,90	70	40	8	3,3	M6	2,020
107 823 30	23	30	A	148,1	139,90	80	40	8	3,3	M6	2,214
107 823 35	23	35	A	148,1	139,90	90	40	10	3,3	M8	2,414
107 823 40	23	40	A	148,1	139,90	90	40	12	3,3	M10	2,320
107 823 45	23	45	A	148,1	139,90	90	40	14	3,8	M12	2,206
107 823 50	23	50	A	148,1	139,90	90	40	14	3,8	M12	2,102
107 824 30	24	30	A	154,1	145,94	80	40	8	3,3	M6	2,316
107 824 35	24	35	A	154,1	145,94	90	40	10	3,3	M8	2,536
107 824 40	24	40	A	154,1	145,94	90	40	12	3,3	M10	2,436
107 825 25	25	25	A	160,2	152,00	70	40	8	3,3	M6	2,254
107 825 30	25	30	A	160,2	152,00	80	40	8	3,3	M6	2,448
107 825 35	25	35	A	160,2	152,00	90	40	10	3,3	M8	2,666
107 825 40	25	40	A	160,2	152,00	90	40	12	3,3	M10	2,576
107 825 45	25	45	A	160,2	152,00	90	40	14	3,8	M12	2,456
107 825 50	25	50	A	160,2	152,00	90	40	14	3,8	M12	2,364

Tolerances

Bore
from 12 mm to 18 mm: +0.018 / -0
from 19 mm to 30 mm: +0.021 / -0
from 32 mm to 50 mm: +0.025 / -0

Keyway width
from 4 mm to 6 mm: +0.030 / -0
from 8 mm to 10 mm: +0.036 / -0
from 12 mm to 14 mm: +0.043 / -0

Keyway depth
from 1.8 mm to 2.8 mm: +0.10 / -0
from 3.3 mm to 3.8 mm: +0.20 / -0

Sprockets KRF, Teeth Hardened, ISO 16 B-1, Pitch 1“ x 17.02 mm

Material: Steel C45.

Ready-to-install, for various shaft diameters.

Teeth milled and induction hardened (approx. HRC 50), custom bore H7 - surface parameter R_a 1.6, keyway in accordance with DIN 6885/1 positioned beneath tip of tooth, 2 threads for set screws, one positioned for the keyway, one offset by 90°.

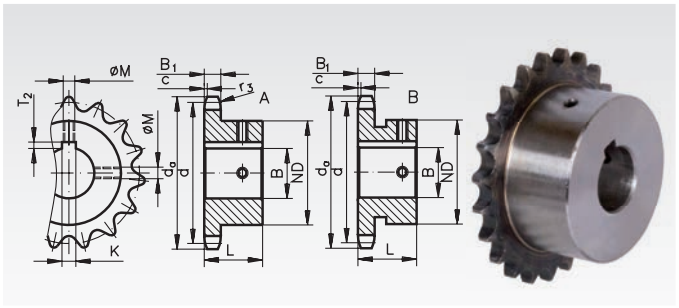

Ordering Details: e.g.: Product No. 108 811 25, Sprocket KRF, ISO 16 B-1, 11 Teeth, 25 mm Bore

ISO 16 B-1, Pitch 1“ x 17.02 mm, B_1 = 16.2 mm, c = 2.5 mm, r_3 = 26 mm

Product No.	Number of teeth	Bore mm	Type	d_a mm	d mm	ND mm	L mm	K mm	T_2 mm	M	Weight kg
108 811 25	11	25	A	101,7	90,14	61	40	8	3,3	M6	1,124
108 811 30	11	30	A	101,7	90,14	61	40	8	3,3	M6	1,060
108 811 35	11	35	A	101,7	90,14	61	40	10	3,3	M8	0,876
108 811 40	11	40	A	101,7	90,14	67	40	12	3,3	M10	0,882
108 812 25	12	25	A	109,7	98,14	69	40	8	3,3	M6	1,418
108 812 30	12	30	A	109,7	98,14	69	40	8	3,3	M6	1,350
108 812 35	12	35	A	109,7	98,14	69	40	10	3,3	M8	1,268
108 812 40	12	40	A	109,7	98,14	69	40	12	3,3	M10	1,166
108 813 25	13	25	A	117,7	106,12	70	40	8	3,3	M6	1,588
108 813 30	13	30	A	117,7	106,12	78	40	8	3,3	M6	1,626
108 813 35	13	35	A	117,7	106,12	78	40	10	3,3	M8	1,608
108 813 40	13	40	A	117,7	106,12	78	40	12	3,3	M10	1,506
108 814 30	14	30	A	125,7	114,15	80	40	8	3,3	M6	1,820
108 814 35	14	35	A	125,7	114,15	84	40	10	3,3	M8	1,812
108 814 40	14	40	A	125,7	114,15	84	40	12	3,3	M10	1,830
108 814 45	14	45	A	125,7	114,15	84	40	14	3,8	M12	1,712
108 814 50	14	50	A	125,7	114,15	84	40	14	3,8	M12	1,606
108 815 25	15	25	A	133,7	122,17	70	40	8	3,3	M6	1,842
108 815 30	15	30	A	133,7	122,17	80	40	8	3,3	M6	2,088
108 815 35	15	35	A	133,7	122,17	82	40	10	3,3	M8	2,302
108 815 40	15	40	A	133,7	122,17	82	40	12	3,3	M10	2,210
108 815 45	15	45	A	133,7	122,17	82	40	14	3,8	M12	2,078
108 815 50	15	50	A	133,7	122,17	82	40	14	3,8	M12	1,888
108 816 25	16	25	A	141,8	130,20	80	45	8	3,3	M6	2,544
108 816 30	16	30	A	141,8	130,20	80	45	8	3,3	M6	2,468
108 816 35	16	35	A	141,8	130,20	100	45	10	3,3	M8	3,010
108 816 40	16	40	A	141,8	130,20	100	45	12	3,3	M10	2,880
108 816 45	16	45	A	141,8	130,20	100	45	14	3,8	M12	2,776
108 816 50	16	50	A	141,8	130,20	100	45	14	3,8	M12	2,648
108 817 30	17	30	A	149,8	138,22	100	45	8	3,3	M6	2,666
108 817 35	17	35	A	149,8	138,22	100	45	10	3,3	M8	3,214
108 817 40	17	40	A	149,8	138,22	100	45	12	3,3	M10	3,086
108 817 45	17	45	A	149,8	138,22	100	45	14	3,8	M12	2,866

Tolerances

Bore
from 12 mm to 18 mm: +0.018 / -0
from 19 mm to 30 mm: +0.021 / -0
from 32 mm to 50 mm: +0.025 / -0

Keyway width
from 4 mm to 6 mm: +0.030 / -0
from 8 mm to 10 mm: +0.036 / -0
from 12 mm to 14 mm: +0.043 / -0

Keyway depth
from 1.8 mm to 2.8 mm: +0.10 / -0
from 3.3 mm to 3.8 mm: +0.20 / -0

Sprockets KRF, Teeth Hardened, ISO 16 B-1, Pitch 1“ x 17.02 mm

Material: Steel C45.

Ready-to-install, for various shaft diameters.

Teeth milled and induction hardened (approx. HRC 50), custom bore H7 - surface parameter R_a 1.6, keyway in accordance with DIN 6885/1 positioned beneath tip of tooth, 2 threads for set screws, one positioned for the keyway, one offset by 90°.

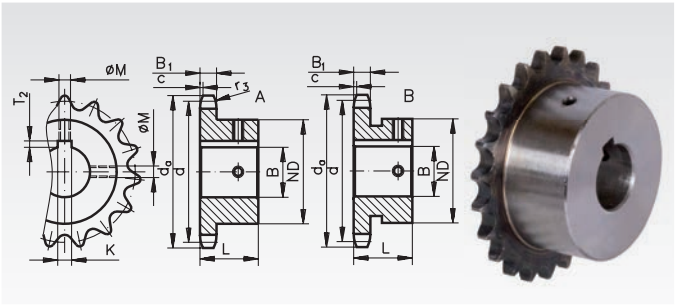

Ordering Details: e.g.: Product No. 108 817 50, Sprocket KRF, ISO 16 B-1, 17 Teeth, 50 mm Bore

ISO 16 B-1, Pitch 1“ x 17.02 mm, B_1 = 16.2 mm, c = 2.5 mm, r_3 = 26 mm

Product No.	Number of teeth	Bore mm	Type	d_a mm	d mm	ND mm	L mm	K mm	T_2 mm	M	Weight kg
108 817 50	17	50	A	149,8	138,22	100	45	14	3,8	M12	2,842
108 818 30	18	30	A	157,8	146,28	80	45	8	3,3	M6	2,888
108 818 35	18	35	A	157,8	146,28	100	45	10	3,3	M8	3,416
108 818 40	18	40	A	157,8	146,28	100	45	12	3,3	M10	3,322
108 818 45	18	45	A	157,8	146,28	100	45	14	3,8	M12	3,188
108 818 50	18	50	A	157,8	146,28	100	45	14	3,8	M12	3,062
108 819 30	19	30	A	165,9	154,33	80	45	8	3,3	M6	3,122
108 819 35	19	35	A	165,9	154,33	100	45	10	3,3	M8	3,670
108 819 40	19	40	A	165,9	154,33	100	45	12	3,3	M10	3,558
108 819 50	19	50	A	165,9	154,33	100	45	14	3,8	M12	3,286
108 820 30	20	30	A	173,2	162,38	80	45	8	3,3	M6	3,372
108 820 35	20	35	A	173,2	162,38	100	45	10	3,3	M8	3,802
108 820 40	20	40	A	173,2	162,38	100	45	12	3,3	M10	3,782
108 820 50	20	50	A	173,2	162,38	100	45	14	3,8	M12	3,552
108 821 30	21	30	A	182,0	170,43	80	50	8	3,3	M6	3,812
108 821 35	21	35	A	182,0	170,43	100	50	10	3,3	M8	4,446
108 821 40	21	40	A	182,0	170,43	110	50	12	3,3	M10	4,752
108 821 50	21	50	A	182,0	170,43	110	50	14	3,8	M12	4,480
108 822 30	22	30	A	190,1	178,48	80	50	8	3,3	M6	4,078
108 822 35	22	35	A	190,1	178,48	100	50	10	3,3	M8	4,716
108 822 40	22	40	A	190,1	178,48	110	50	12	3,3	M10	5,042
108 823 30	23	30	A	198,1	186,53	80	50	8	3,3	M6	4,350
108 823 40	23	40	A	198,1	186,53	110	50	12	3,3	M10	5,320
108 824 30	24	30	A	206,2	194,59	80	50	8	3,3	M6	4,676
108 824 35	24	35	A	206,2	194,59	100	50	10	3,3	M8	5,312
108 824 40	24	40	A	206,2	194,59	110	50	12	3,3	M10	5,630
108 824 45	24	45	A	206,2	194,59	110	50	14	3,8	M12	5,464
108 824 50	24	50	A	206,2	194,59	110	50	14	3,8	M12	5,318
108 825 30	25	30	A	214,2	202,66	80	50	8	3,3	M6	4,874
108 825 35	25	35	A	214,2	202,66	100	50	10	3,3	M8	5,586
108 825 40	25	40	A	214,2	202,66	110	50	12	3,3	M10	5,820
108 825 45	25	45	A	214,2	202,66	110	50	14	3,8	M12	5,766
108 825 50	25	50	A	214,2	202,66	110	50	14	3,8	M12	5,640

Tolerances

Bore
from 12 mm to 18 mm: +0.018 / -0
from 19 mm to 30 mm: +0.021 / -0
from 32 mm to 50 mm: +0.025 / -0

Keyway width
from 4 mm to 6 mm: +0.030 / -0
from 8 mm to 10 mm: +0.036 / -0
from 12 mm to 14 mm: +0.043 / -0

Keyway depth
from 1.8 mm to 2.8 mm: +0.10 / -0
from 3.3 mm to 3.8 mm: +0.20 / -0

Sprockets KRT / KRTG with One-Sided Hub, for Taper Bushes

Material: Steel C45, optionally hardened or grey cast iron.

Type KRT: Not hardened.

Type KRTG: Teeth induction hardened (approx. HRC 50).

Sprockets for taper bushes, for easy and fast mounting.
The taper bush has to be ordered separately, see page 76.

Product numbers ending with G are made from grey cast iron GG25. At sprockets marked with *, the teeth are centered on the wheel body, see drawing.

Ordering Details: e.g.: Product No. 101 771 17, KRT , ISO 06 B-1, 17 Teeth, Dimension bore with Reference to Taper Bush Type, see page 76.

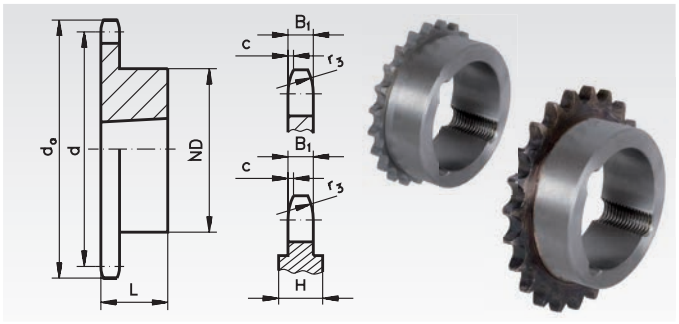

ISO 06 B-1, Pitch 3/8 x 7/32", B_1 = 5.3 mm, c = 1,0 mm, r_3 = 10 mm

Product No. KRT	Product No. KRTG	Number of teeth	d_a mm	d mm	ND mm	L mm	Weight kg	Taper-bush
101 771 17	101 781 17	17	55,3	51,83	45	22	0,11	1008
101 771 18	101 781 18	18	58,3	54,85	45	22	0,14	1008
101 771 19	101 781 19	19	61,3	57,87	45	22	0,15	1008
101 771 20	101 781 20	20	64,3	60,89	46	22	0,16	1008
101 771 21	101 781 21	21	68,0	63,91	46	22	0,18	1008
101 771 22	101 781 22	22	71,0	66,93	50	22	0,25	1108
101 771 23	101 781 23	23	73,5	69,95	63	25	0,27	1210
101 771 24	101 781 24	24	77,0	72,97	63	25	0,30	1210
101 771 25	101 781 25	25	80,0	76,00	63	25	0,32	1210
101 771 26	101 781 26	26	83,0	79,02	63	25	0,33	1210
101 771 27	101 781 27	27	86,0	82,05	63	25	0,34	1210
101 771 28	101 781 28	28	89,0	85,07	63	25	0,37	1210
101 771 30	101 781 30	30	94,7	91,12	63	25	0,39	1210
101 771 38	-	38	119,5	115,35	70	25	0,65	1210
101 771 45	-	45	140,7	136,55	70	25	1,01	1210
101 771 57	-	57	176,9	172,91	70	25	1,20	1210
101 771 57G	-	57	176,9	172,91	83	25	1,44	1210
101 771 76G	-	76	234,9	230,47	83	25	1,84	1210
101 771 83	-	95	292,5	288,08	80	25	3,00	1210
101 771 83G	-	95	292,5	288,08	83	25	2,52	1210
101 771 88G	-	114	349,6	345,68	83	38	5,00	1215

ISO 08 B-1, Pitch 1/2 x 5/16", B_1 = 7.2 mm, c = 1,3 mm, r_3 = 13 mm

Product No. KRT	Product No. KRTG	Number of teeth	d_a mm	d mm	ND mm	L mm	Weight kg	Taper-bush
105 771 14	-	14	61,8	57,07	45	22	0,15	1008
105 771 15	105 781 15	15	65,0	61,09	45	22	0,19	1008
105 771 16	105 781 16	16	69,5	65,10	50	22	0,24	1108
105 771 17	105 781 17	17	73,6	69,11	60	25	0,24	1210
105 771 18	105 781 18	18	77,8	73,14	60	25	0,29	1210
105 771 19	105 781 19	19	81,7	77,16	63	25	0,34	1210
105 771 20	105 781 20	20	85,8	81,19	71	25	0,34	1610
105 771 21	105 781 21	21	89,7	85,22	71	25	0,38	1610
105 771 22	105 781 22	22	93,8	89,24	71	25	0,43	1610
105 771 23	105 781 23	23	98,2	93,27	76	25	0,48	1610
105 771 24	105 781 24	24	101,8	97,29	76	25	0,67	1610
105 771 25	105 781 25	25	105,8	101,33	76	25	0,72	1610
105 771 26	105 781 26	26	110,0	105,36	76	25	0,82	1610
105 771 27	105 781 27	27	114,0	109,40	76	25	0,86	1610
105 771 28	105 781 28	28	118,0	113,42	90	32	0,86	2012
105 771 30	105 781 30	30	126,1	121,50	90	32	0,91	2012
105 771 38	-	38	158,6	153,80	90	32	1,20	2012
105 771 45	-	45	188,0	182,07	100	32	1,68	2012
105 771 57	-	57	236,4	230,54	100	32	2,70	2012
105 771 57G	-	57	236,4	230,54	111	32	2,78	2012
105 771 76	-	76	313,3	307,33	100	32	4,70	2012
105 771 76G	-	76	313,3	307,33	111	32	3,81	2012
105 771 83G	-	95	390,1	384,11	111	32	6,40	2012
105 771 88G *	-	114	466,9	460,90	124	45	8,50	2517

* H=15,2mm.

ISO 10 B-1, Pitch 5/8 x 3/8", B_1 = 9.1 mm, c = 1.6 mm, r_3 = 16 mm

Product No. KRT	Product No. KRTG	Number of teeth	d_a mm	d mm	ND mm	L mm	Weight kg	Taper-bush
106 771 13	106 781 13	13	73,0	66,32	47	22	0,24	1008
106 771 14	106 781 14	14	78,0	71,34	52	22	0,29	1108
106 771 15	106 781 15	15	83,0	76,36	60	25	0,34	1210
106 771 16	106 781 16	16	88,0	81,37	70	25	0,34	1610
106 771 17	106 781 17	17	93,0	86,39	71	25	0,38	1610
106 771 18	106 781 18	18	98,3	91,42	75	25	0,43	1610
106 771 19	106 781 19	19	103,3	96,45	75	25	0,62	1610
106 771 20	106 781 20	20	108,4	101,49	75	25	0,77	1610
106 771 21	106 781 21	21	113,4	106,52	76	25	0,72	1610
106 771 22	106 781 22	22	118,0	111,55	76	25	0,77	1610
106 771 23	106 781 23	23	123,4	116,58	76	25	0,96	1610
106 771 24	106 781 24	24	128,3	121,62	90	32	1,06	2012
106 771 25	106 781 25	25	134,0	126,66	90	32	1,15	2012
106 771 26	106 781 26	26	139,0	131,70	90	32	1,20	2012
106 771 27	106 781 27	27	144,0	136,75	90	32	1,25	2012
106 771 28	106 781 28	28	148,7	141,78	90	32	1,34	2012
106 771 30	106 781 30	30	158,8	151,87	90	32	1,54	2012
106 771 38	-	38	199,2	192,24	100	32	2,40	2012
106 771 45	-	45	235,0	227,58	100	32	3,12	2012
106 771 57	-	57	296,0	288,18	100	32	5,00	2012
106 771 57G	-	57	296,0	288,18	111	32	4,28	2012
106 771 76G	-	76	392,1	384,16	111	32	8,0	2012
106 771 83G *	-	95	488,5	480,14	124	45	9,0	2517
106 771 88G *	-	114	584,1	576,13	124	45	15,5	2517

* H=18,9mm.

ISO 12 B-1, Pitch 3/4 x 7/16" B_1 = 11.1 mm, c = 2.0 mm, r_3 = 19 mm

Product No. KRT	Product No. KRTG	Number of teeth	d_a mm	d mm	ND mm	L mm	Weight kg	Taper-bush
107 771 13	107 781 13	13	87,5	79,59	60	25	0,38	1210
107 771 14	107 781 14	14	93,6	85,61	70	25	0,48	1610
107 771 15	107 781 15	15	99,8	91,63	70	25	0,48	1610
107 771 16	107 781 16	16	105,5	97,65	75	25	0,67	1610
107 771 17	107 781 17	17	111,5	103,67	76	25	0,86	1610
107 771 18	107 781 18	18	118,0	109,71	90	32	0,91	2012
107 771 19	107 781 19	19	124,2	115,75	90	32	1,06	2012
107 771 20	107 781 20	20	129,7	121,78	90	32	1,06	2012
107 771 21	107 781 21	21	136,0	127,82	102	45	1,20	2517
107 771 22	107 781 22	22	141,8	133,86	102	45	1,34	2517
107 771 23	107 781 23	23	149,0	139,90	108	45	1,49	2517
107 771 24	107 781 24	24	153,9	145,94	108	45	1,63	2517
107 771 25	107 781 25	25	160,0	152,00	108	45	1,78	2517
107 771 26	107 781 26	26	165,9	158,04	108	45	1,92	2517
107 771 27	107 781 27	27	172,3	164,09	108	45	2,02	2517
107 771 28	107 781 28	28	178,0	170,13	108	45	2,21	2517
107 771 30	107 781 30	30	190,5	182,24	108	45	2,49	2517
107 771 38	-	38	239,0	230,69	108	45	3,74	2517
107 771 45	-	45	282,5	273,10	108	45	5,52	2517
107 771 45G *	-	45	282,5	273,10	118	45	4,60	2517
107 771 57	-	57	354,0	345,81	108	45	8,46	2517
107 771 57G *	-	57	354,0	345,81	124	45	9,12	2517
107 771 76G *	-	76	469,9	460,99	124	45	12,00	2517
107 771 83G *	-	95	585,1	576,17	124	45	17,00	2517
107 771 88G *	-	114	700,6	691,36	124	64	23,00	2525

* 45 teeth and 57 teeth: H=18.9mm.
76 to 114 teeth: H=23.6mm.

Sprockets KRT / KRTG with One-Sided Hub, for Taper Bushes

Material: Steel C45, optionally hardened or grey cast iron.

Type KRT: Not hardened.

Type KRTG: Teeth induction hardened (approx. HRC 50).

Sprockets for taper bushes, for easy and fast mounting.
The taper bush has to be ordered separately, see page 76.

Product numbers ending with G are made from grey cast iron GG25. At sprockets marked with *, the teeth are centered on the wheel body, see drawing.

Ordering Details: e.g.: Product No. 108 771 13, KRT, ISO 16 B-1, 13 Teeth, Determine bore size with reference to Taper bush type, see page 76.

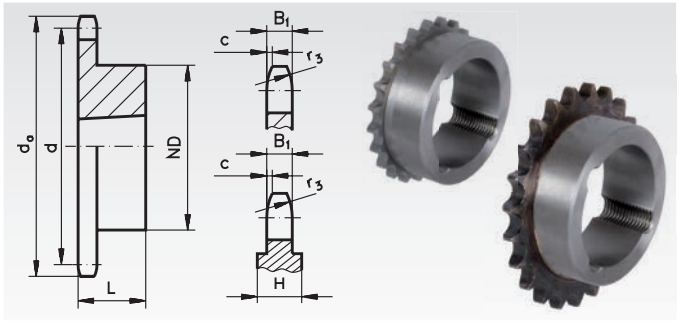

ISO 16 B-1, Pitch 1" x 17.02 mm, B_1 = 16.2 mm, c = 2.5 mm, r_3 = 26 mm

Product No. KRT	Product No. KRTG	Number of teeth	d_a mm	d mm	ND mm	L mm	Weight kg	Taper-bush
108 771 13	108 781 13	13	117,0	106,12	73	25	1,10	1610
108 771 14	108 781 14	14	125,0	114,15	76	25	1,20	1610
108 771 15	108 781 15	15	133,0	122,17	76	25	1,30	1610
108 771 16	108 781 16	16	141,0	130,20	90	32	1,34	2012
108 771 17	108 781 17	17	149,0	138,22	90	32	1,49	2012
108 771 18	108 781 18	18	157,0	146,28	108	45	1,73	2517
108 771 19	108 781 19	19	165,2	154,33	108	45	1,97	2517
108 771 20	108 781 20	20	173,2	162,38	108	45	2,64	2517
108 771 21	108 781 21	21	181,2	170,43	110	45	2,88	2517
108 771 22	108 781 22	22	189,3	178,48	110	45	3,12	2517
108 771 23	108 781 23	23	197,5	186,53	110	45	3,36	2517
108 771 24	108 781 24	24	205,5	194,59	110	45	3,60	2517
108 771 25	108 781 25	25	213,5	202,66	110	45	3,89	2517
108 771 26	108 781 26	26	221,6	210,72	110	45	4,22	2517
108 771 27	108 781 27	27	229,6	218,79	110	45	4,32	2517
108 771 28	108 781 28	28	237,7	226,85	110	45	4,56	2517
108 771 30	108 781 30	30	254,0	243,00	140	51	5,52	3020
108 771 38	-	38	320,7	307,59	140	51	9,60	3020
108 771 38G *	-	38	320,7	307,59	160	51	8,90	3020
108 771 45	-	45	377,0	364,13	140	51	13,5	3020
108 771 45G *	-	45	377,0	364,13	160	51	9,2	3020
108 771 57	-	57	474,0	461,08	140	51	21,3	3020
108 771 57G *	-	57	474,0	461,08	160	51	11,6	3020
108 771 76G *	-	76	627,0	614,65	160	51	20,0	3020
108 771 83G *	-	95	781,0	768,22	160	51	30,0	3020
108 771 88G *	-	114	933,0	921,81	160	76	62,0	3030

* 38 to 95 teeth: H=23mm.
114 teeth: H=30.5mm.

ISO 20 B-1, Pitch 1 1/4" x 3/4", B_1 = 18.5 mm, c = 3.5 mm, r_3 = 32 mm

Product No. KRT	Product No. KRTG	Number of teeth	d_a mm	d mm	ND mm	L mm	Weight kg	Taper-bush
109 771 13	109 781 13	13	147,8	132,65	90	32	1,6	2012
109 771 14	-	14	157,8	142,68	90	32	1,9	2012
109 771 15	109 781 15	15	167,9	152,72	108	45	2,4	2517
109 771 16	-	16	177,9	162,75	108	45	2,8	2517
109 771 17	109 781 17	17	187,9	172,78	108	45	3,1	2517
109 771 18	-	18	198,0	182,85	108	45	3,5	2517
109 771 19	109 781 19	19	208,1	192,91	108	45	3,9	2517
109 771 20	-	20	218,1	202,98	108	45	4,4	2517
109 771 21	109 781 21	21	228,2	213,04	108	45	4,8	2517
109 771 22	-	22	238,3	223,11	108	45	5,3	2517
109 771 23	109 781 23	23	248,3	233,17	108	45	5,7	2517
109 771 24	-	24	258,4	243,23	108	45	6,2	2517
109 771 25	109 781 25	25	268,5	253,33	108	45	6,8	2517
109 771 27	109 781 27	27	288,6	273,49	150	51	9,1	3020
109 771 30	109 781 30	30	318,9	303,75	150	51	10,1	3020
109 771 36	-	36	397,2	364,30	150	51	15,7	3020
109 771 38	-	38	399,6	384,49	160	51	18,0	3020
109 771 38G *	-	38	399,6	384,49	160	51	12,7	3020
109 771 45	-	45	470,3	455,17	160	51	24,7	3020
109 771 57	-	57	591,5	576,36	160	51	45,0	3020
109 771 57G *	-	57	591,5	576,36	160	51	20,0	3020
109 771 76	-	76	783,5	768,32	160	51	67,0	3020
109 771 76G *	-	76	783,5	768,32	160	51	39,0	3020

* H=24mm.

ISO 24 B-1, Pitch 1 1/2" x 1", B_1 = 24.1 mm, c = 4.0 mm, r_3 = 38 mm

Product No. KRT	Number of teeth	d_a mm	d mm	ND mm	L mm	Weight kg	Taper-bush
110 771 38G*	38	476,2	461,39	160	76	24	3030
110 771 57G*	57	706,5	691,63	160	76	45	3030

* H=35mm.



Product numbers ending with G are made from grey cast iron GG25.

Taper bushes page 76

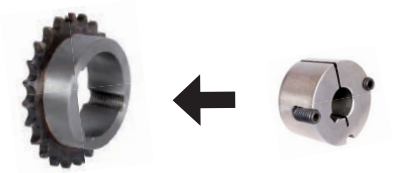

Description and mounting instructions page 824

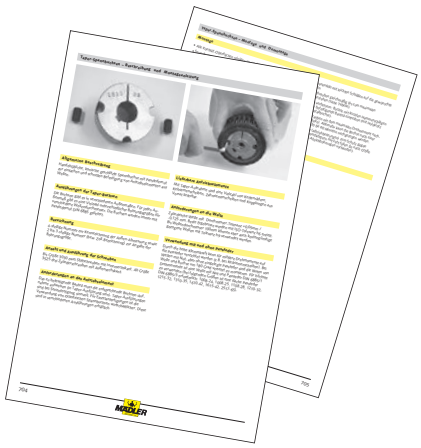

Taper Bushes

Material: GG25.

Bores ISO E8, feather keyways in accordance with DIN 6885/1. Screws included in delivery.

Shaft tolerance +0.05/-0.125 mm.
Can be used with or without parallel key, depending on the required torque.

Other bush sizes and bores available at short notice (some in stock). Assembly instructions see page 824.

Ordering Details: e.g.: Product No. 622 501 09, Taper Bush 1008, 9 mm Bore

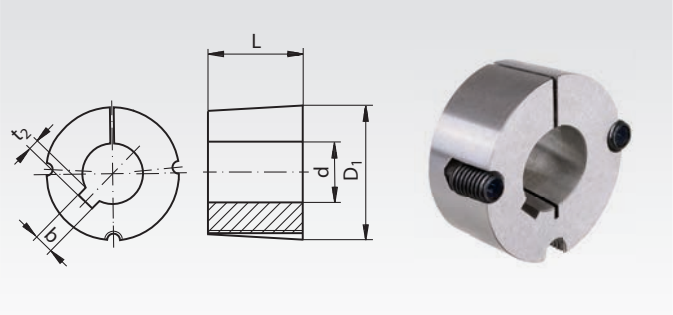

Product No.	Taper bush No.	Bore d mm	Keyway b mm	t_2 mm	L mm	D_1 mm	Weight kg
622 501 09	1008	9	3	1,4	22,3	35,2	0,175
622 501 10	1008	10	3	1,4	22,3	35,2	0,160
622 501 11	1008	11	4	1,8	22,3	35,2	0,140
622 501 12	1008	12	4	1,8	22,3	35,2	0,120
622 501 14	1008	14	5	2,3	22,3	35,2	0,118
622 501 15	1008	15	5	2,3	22,3	35,2	0,116
622 501 16	1008	16	5	2,3	22,3	35,2	0,112
622 501 18	1008	18	6	2,8	22,3	35,2	0,100
622 501 19	1008	19	6	2,8	22,3	35,2	0,098
622 501 20	1008	20	6	2,8	22,3	35,2	0,094
622 501 22	1008	22	6	2,8	22,3	35,2	0,080
622 501 24[1)]	1008	24	8	1,3[1)]	22,3	35,2	0,070
622 501 25[1)]	1008	25	8	1,3[1)]	22,3	35,2	0,068
622 502 09	1108	9	3	1,4	22,3	38,4	0,195
622 502 10	1108	10	3	1,4	22,3	38,4	0,180
622 502 11	1108	11	4	1,8	22,3	38,4	0,165
622 502 12	1108	12	4	1,8	22,3	38,4	0,154
622 502 14	1108	14	5	2,3	22,3	38,4	0,148
622 502 15	1108	15	5	2,3	22,3	38,4	0,145
622 502 16	1108	16	5	2,3	22,3	38,4	0,140
622 502 17	1108	17	5	2,3	22,3	38,4	0,136
622 502 18	1108	18	6	2,8	22,3	38,4	0,132
622 502 19	1108	19	6	2,8	22,3	38,4	0,126
622 502 20	1108	20	6	2,8	22,3	38,4	0,122
622 502 22	1108	22	6	2,8	22,3	38,4	0,112
622 502 24	1108	24	8	3,3	22,3	38,4	0,096
622 502 25	1108	25	8	3,3	22,3	38,4	0,092
622 502 28[1)]	1108	28	8	1,3[1)]	22,3	38,4	0,088
622 503 10	1210	10	3	1,4	25,4	47,5	0,282
622 503 11	1210	11	4	1,8	25,4	47,5	0,280
622 503 12	1210	12	4	1,8	25,4	47,5	0,278
622 503 14	1210	14	5	2,3	25,4	47,5	0,274
622 503 15	1210	15	5	2,3	25,4	47,5	0,267
622 503 16	1210	16	5	2,3	25,4	47,5	0,262
622 503 17	1210	17	5	2,3	25,4	47,5	0,257
622 503 18	1210	18	6	2,8	25,4	47,5	0,250
622 503 19	1210	19	6	2,8	25,4	47,5	0,244
622 503 20	1210	20	6	2,8	25,4	47,5	0,240
622 503 22	1210	22	6	2,8	25,4	47,5	0,224
622 503 24	1210	24	8	3,3	25,4	47,5	0,208
622 503 25	1210	25	8	3,3	25,4	47,5	0,198
622 503 28	1210	28	8	3,3	25,4	47,5	0,184
622 503 30	1210	30	8	3,3	25,4	47,5	0,168
622 503 32	1210	32	10	3,3	25,4	47,5	0,160
622 513 14	1215	14	5	2,3	38,1	47,5	0,380
622 513 16	1215	16	5	2,3	38,1	47,5	0,370
622 513 18	1215	18	6	2,8	38,1	47,5	0,350
622 513 19	1215	19	6	2,8	38,1	47,5	0,340
622 513 20	1215	20	6	2,8	38,1	47,5	0,335
622 513 22	1215	22	6	2,8	38,1	47,5	0,320
622 513 24	1215	24	8	3,3	38,1	47,5	0,290
622 513 25	1215	25	8	3,3	38,1	47,5	0,285
622 513 28	1215	28	8	3,3	38,1	47,5	0,260
622 513 30	1215	30	8	3,3	38,1	47,5	0,230
622 513 32	1215	32	10	3,3	38,1	47,5	0,200

Product No.	Taper bush No.	Bore d mm	Keyway b mm	t_2 mm	L mm	D_1 mm	Weight kg
622 504 12	1610	12	4	1,8	25,4	57	0,416
622 504 14	1610	14	5	2,3	25,4	57	0,412
622 504 15	1610	15	5	2,3	25,4	57	0,408
622 504 16	1610	16	5	2,3	25,4	57	0,402
622 504 17	1610	17	5	2,3	25,4	57	0,397
622 504 18	1610	18	6	2,8	25,4	57	0,390
622 504 19	1610	19	6	2,8	25,4	57	0,380
622 504 20	1610	20	6	2,8	25,4	57	0,373
622 504 22	1610	22	6	2,8	25,4	57	0,366
622 504 24	1610	24	8	3,3	25,4	57	0,356
622 504 25	1610	25	8	3,3	25,4	57	0,348
622 504 28	1610	28	8	3,3	25,4	57	0,324
622 504 30	1610	30	8	3,3	25,4	57	0,304
622 504 32	1610	32	10	3,3	25,4	57	0,280
622 504 35	1610	35	10	3,3	25,4	57	0,264
622 504 38	1610	38	10	3,3	25,4	57	0,240
622 504 40	1610	40	12	3,3	25,4	57	0,210
622 504 42	1610	42	12	3,3	25,4	57	0,200
622 508 12	1615	12	4	1,8	38,1	57	0,590
622 508 14	1615	14	5	2,3	38,1	57	0,580
622 508 15	1615	15	5	2,3	38,1	57	0,580
622 508 16	1615	16	5	2,3	38,1	57	0,580
622 508 18	1615	18	6	2,8	38,1	57	0,561
622 508 19	1615	19	6	2,8	38,1	57	0,557
622 508 20	1615	20	6	2,8	38,1	57	0,552
622 508 22	1615	22	6	2,8	38,1	57	0,540
622 508 24	1615	24	8	3,3	38,1	57	0,520
622 508 25	1615	25	8	3,3	38,1	57	0,510
622 508 28	1615	28	8	3,3	38,1	57	0,470
622 508 30	1615	30	8	3,3	38,1	57	0,446
622 508 32	1615	32	10	3,3	38,1	57	0,414
622 508 35	1615	35	10	3,3	38,1	57	0,380
622 508 38	1615	38	10	3,3	38,1	57	0,346
622 508 40	1615	40	12	3,3	38,1	57	0,340
622 508 42[1)]	1615	42	12	2,2[1)]	38,1	57	0,260
622 505 12	2012	12	4	1,8	31,8	70	0,810
622 505 14	2012	14	5	2,3	31,8	70	0,800
622 505 15	2012	15	5	2,3	31,8	70	0,785
622 505 16	2012	16	5	2,3	31,8	70	0,770
622 505 18	2012	18	6	2,8	31,8	70	0,762
622 505 19	2012	19	6	2,8	31,8	70	0,756
622 505 20	2012	20	6	2,8	31,8	70	0,750
622 505 22	2012	22	6	2,8	31,8	70	0,736
622 505 24	2012	24	8	3,3	31,8	70	0,724
622 505 25	2012	25	8	3,3	31,8	70	0,714
622 505 28	2012	28	8	3,3	31,8	70	0,684
622 505 30	2012	30	8	3,3	31,8	70	0,658
622 505 32	2012	32	10	3,3	31,8	70	0,630
622 505 35	2012	35	10	3,3	31,8	70	0,604
622 505 38	2012	38	10	3,3	31,8	70	0,566
622 505 40	2012	40	12	3,3	31,8	70	0,538
622 505 42	2012	42	12	3,3	31,8	70	0,510
622 505 45	2012	45	14	3,8	31,8	70	0,460
622 505 48	2012	48	14	3,8	31,8	70	0,404
622 505 50	2012	50	14	3,8	31,8	70	0,372

[1)] With flat keyway.

Taper Bushes

Material: GG25.

Bores ISO E8, feather keyways in accordance with DIN 6885/1. Screws included in delivery. From size 3525 with three screws.

Shaft tolerance +0.05/-0.125 mm.
Can be used with or without parallel key, depending on the required torque.

Other bush sizes and bores available at short notice (some in stock). Assembly instructions see page 824.

Ordering Details: e.g.: Product No. 622 506 15, Taper Bush 2517, 15 mm Bore

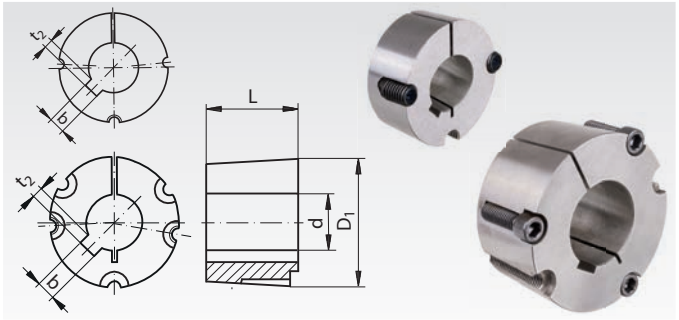

Product No.	Taper bush No.	Bore d mm	Keyway b mm	t_2 mm	L mm	D_1 mm	Weight kg
622 506 15	2517	15	5	2,3	44,5	85,5	1,85
622 506 16	2517	16	5	2,3	44,5	85,5	1,80
622 506 18	2517	18	6	2,8	44,5	85,5	1,70
622 506 19	2517	19	6	2,8	44,5	85,5	1,62
622 506 20	2517	20	6	2,8	44,5	85,5	1,60
622 506 22	2517	22	6	2,8	44,5	85,5	1,57
622 506 24	2517	24	8	3,3	44,5	85,5	1,57
622 506 25	2517	25	8	3,3	44,5	85,5	1,56
622 506 28	2517	28	8	3,3	44,5	85,5	1,52
622 506 30	2517	30	8	3,3	44,5	85,5	1,49
622 506 32	2517	32	10	3,3	44,5	85,5	1,45
622 506 35	2517	35	10	3,3	44,5	85,5	1,40
622 506 38	2517	38	10	3,3	44,5	85,5	1,35
622 506 40	2517	40	12	3,3	44,5	85,5	1,32
622 506 42	2517	42	12	3,3	44,5	85,5	1,27
622 506 45	2517	45	14	3,8	44,5	85,5	1,20
622 506 48	2517	48	14	3,8	44,5	85,5	1,13
622 506 50	2517	50	14	3,8	44,5	85,5	1,08
622 506 55	2517	55	16	4,3	44,5	85,5	0,96
622 506 60	2517	60	18	4,4	44,5	85,5	0,81
622 506 65[1)]	2517	65	18	3,4[1)]	44,5	85,5	0,65
622 507 20	3020	20	6	2,8	50,8	108	3,00
622 507 25	3020	25	8	3,3	50,8	108	2,91
622 507 28	3020	28	8	3,3	50,8	108	2,79
622 507 30	3020	30	8	3,3	50,8	108	2,84
622 507 32	3020	32	10	3,3	50,8	108	2,80
622 507 35	3020	35	10	3,3	50,8	108	2,75
622 507 38	3020	38	10	3,3	50,8	108	2,70
622 507 40	3020	40	12	3,3	50,8	108	2,64
622 507 42	3020	42	12	3,3	50,8	108	2,59
622 507 45	3020	45	14	3,8	50,8	108	2,52
622 507 48	3020	48	14	3,8	50,8	108	2,43
622 507 50	3020	50	14	3,8	50,8	108	2,37
622 507 55	3020	55	16	4,3	50,8	108	2,23
622 507 60	3020	60	18	4,4	50,8	108	2,00
622 507 65	3020	65	18	4,4	50,8	108	1,89
622 507 70	3020	70	20	4,9	50,8	108	1,70
622 507 75	3020	75	20	4,9	50,8	108	1,49
622 511 30	3030	30	8	3,3	76,2	108	4,05
622 511 35	3030	35	10	3,3	76,2	108	3,95
622 511 38	3030	38	10	3,3	76,2	108	3,86
622 511 40	3030	40	12	3,3	76,2	108	3,82
622 511 42	3030	42	12	3,3	76,2	108	3,69
622 511 45	3030	45	14	3,8	76,2	108	3,55
622 511 48	3030	48	14	3,8	76,2	108	3,45
622 511 50	3030	50	14	3,8	76,2	108	3,42
622 511 55	3030	55	16	4,3	76,2	108	3,18
622 511 60	3030	60	18	4,4	76,2	108	2,95
622 511 65	3030	65	18	4,4	76,2	108	2,68
622 511 70	3030	70	20	4,9	76,2	108	2,06
622 511 75	3030	75	20	4,9	76,2	108	1,64

[1)] With flat keyway.

Product No.	Taper bush No.	Bore d mm	Keyway b mm	t_2 mm	L mm	D_1 mm	Weight kg
622 509 35	3525	35	10	3,3	63,5	127	4,91
622 509 38	3525	38	10	3,3	63,5	127	4,85
622 509 40	3525	40	12	3,3	63,5	127	4,80
622 509 42	3525	42	12	3,3	63,5	127	4,71
622 509 45	3525	45	14	3,8	63,5	127	4,67
622 509 48	3525	48	14	3,8	63,5	127	4,55
622 509 50	3525	50	14	3,8	63,5	127	4,44
622 509 55	3525	55	16	4,3	63,5	127	4,29
622 509 60	3525	60	18	4,4	63,5	127	4,05
622 509 65	3525	65	18	4,4	63,5	127	3,88
622 509 70	3525	70	20	4,9	63,5	127	3,58
622 509 75	3525	75	20	4,9	63,5	127	3,37
622 509 80	3525	80	22	5,4	63,5	127	3,05
622 509 85	3525	85	22	5,4	63,5	127	2,77
622 509 90	3525	90	25	5,4	63,5	127	2,47
622 510 30	3535	30	8	3,3	89,0	127	6,95
622 510 35	3535	35	10	3,3	89,0	127	6,70
622 510 38	3535	38	10	3,3	89,0	127	6,53
622 510 40	3535	40	12	3,3	89,0	127	6,48
622 510 42	3535	42	12	3,3	89,0	127	6,40
622 510 45	3535	45	14	3,8	89,0	127	6,25
622 510 48	3535	48	14	3,8	89,0	127	6,17
622 510 50	3535	50	14	3,8	89,0	127	6,05
622 510 55	3535	55	16	4,3	89,0	127	5,81
622 510 60	3535	60	18	4,4	89,0	127	5,50
622 510 65	3535	65	18	4,4	89,0	127	5,20
622 510 70	3535	70	20	4,9	89,0	127	4,88
622 510 75	3535	75	20	4,9	89,0	127	4,46
622 510 80	3535	80	22	5,4	89,0	127	4,08
622 510 85	3535	85	22	5,4	89,0	127	3,67
622 510 90	3535	90	25	5,4	89,0	127	3,21
622 512 40	4030	40	12	3,3	76,2	146	8,92
622 512 42	4030	42	12	3,3	76,2	146	8,80
622 512 45	4030	45	14	3,8	76,2	146	8,67
622 512 48	4030	48	14	3,8	76,2	146	8,49
622 512 50	4030	50	14	3,8	76,2	146	8,33
622 512 55	4030	55	16	4,3	76,2	146	8,15
622 512 60	4030	60	18	4,4	76,2	146	7,85
622 512 65	4030	65	18	4,4	76,2	146	7,60
622 512 70	4030	70	20	4,9	76,2	146	7,18
622 512 75	4030	75	20	4,9	76,2	146	6,84
622 512 80	4030	80	22	5,4	76,2	146	6,46
622 512 85	4030	85	22	5,4	76,2	146	6,06
622 512 90	4030	90	25	5,4	76,2	146	5,59
622 512 91	4030	100	28	6,4	76,2	146	4,63
622 514 40	4040	40	12	3,3	102,0	146	10,19
622 514 42	4040	42	12	3,3	102,0	146	10,03
622 514 45	4040	45	14	3,8	102,0	146	9,86
622 514 48	4040	48	14	3,8	102,0	146	9,66
622 514 50	4040	50	14	3,8	102,0	146	9,48
622 514 55	4040	55	16	4,3	102,0	146	9,27
622 514 60	4040	60	18	4,4	102,0	146	8,93
622 514 65	4040	65	18	4,4	102,0	146	8,65
622 514 70	4040	70	20	4,9	102,0	146	8,17
622 514 75	4040	75	20	4,9	102,0	146	7,78
622 514 80	4040	80	22	5,4	102,0	146	7,35
622 514 85	4040	85	22	5,4	102,0	146	6,89
622 514 90	4040	90	25	5,4	102,0	146	6,36
622 514 95	4040	95	25	5,4	102,0	146	5,94
622 514 91	4040	100	28	6,4	102,0	146	5,27

Taper Bushes

Material: GG25.

Bores ISO E8, feather keyways in accordance with DIN 6885/1.
Screws included in delivery.

Shaft tolerance +0.05/-0.125 mm.
Can be used with or without parallel key,
depending on the required torque.

Other bush sizes and bores available at short notice
(some in stock). Assembly instructions see page 824.

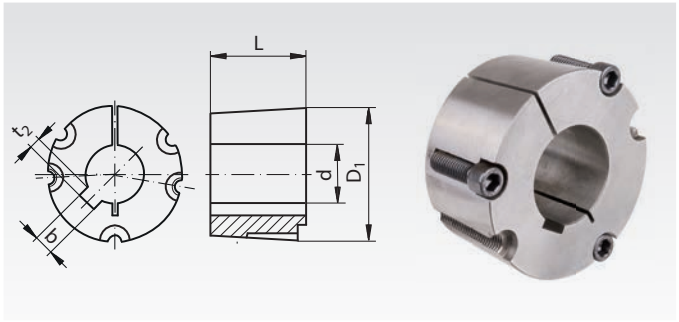

Ordering Details: e.g.: Product No. 622 515 55, Taper Bush 4545, 55 mm Bore

Product No.	Taper bush No.	Bore d mm	Keyway b mm	t_2 mm	L mm	D_1 mm	Weight kg
622 515 55	4545	55	16	4,3	114	162	13,2
622 515 60	4545	60	18	4,4	114	162	12,8
622 515 65	4545	65	18	4,4	114	162	12,4
622 515 70	4545	70	20	4,9	114	162	12,0
622 515 75	4545	75	20	4,9	114	162	11,6
622 515 80	4545	80	22	5,4	114	162	11,0
622 515 85	4545	85	22	5,4	114	162	10,5
622 515 90	4545	90	25	5,4	114	162	10,0
622 515 95	4545	95	25	5,4	114	162	9,4
622 515 91	4545	100	28	6,4	114	162	8,6
622 515 93	4545	110	28	6,4	114	162	7,2

Product No.	Taper bush No.	Bore d mm	Keyway b mm	t_2 mm	L mm	D_1 mm	Weight kg
622 516 70	5050	70	20	4,9	127	178,0	16,7
622 516 75	5050	75	20	4,9	127	178,0	16,1
622 516 80	5050	80	22	5,4	127	178,0	15,6
622 516 85	5050	85	22	5,4	127	178,0	15,0
622 516 90	5050	90	25	5,4	127	178,0	14,4
622 516 95	5050	95	25	5,4	127	178,0	13,9
622 516 91	5050	100	28	6,4	127	178,0	13,1
622 516 92	5050	105	28	6,4	127	178,0	12,5
622 516 93	5050	110	28	6,4	127	178,0	11,6
622 516 94	5050	115	32	7,4	127	178,0	11,0
622 516 96	5050	120	32	7,4	127	178,0	9,8
622 516 97	5050	125	32	7,4	127	178,0	9,1

Spare Screws for Taper Bushes

Material: Steel. **Supply:** One screw (order quantity as needed).
Taper bushes have two or (from size 3525) three screws depending on size.

Ordering Details: e.g.: Product No. 622 501 99, Spare Screw , Taper Bush 1008 and 1108

Product No.	to match Taper bush	Size inch	Screw type	Tightening Torque Nm	Weight g
622 501 99	1008 ; 1108	1/4" x 1/2"	Grub screw with internal hexagon	5,6	1,9
622 503 99	1210 - 1615	3/8" x 5/8"	Grub screw with internal hexagon	20	5,2
622 505 99	2012 ; 2017	7/16" x 7/8"	Grub screw with internal hexagon	30	11,0
622 506 99	2517 ; 2525	1/2" x 1"	Grub screw with internal hexagon	50	16,4
622 507 99	3020 ; 3030	5/8" x 1 1/4"	Grub screw with internal hexagon	90	33,2
622 510 99	3525 ; 3535	1/2" x 1 1/2"	Hexagon socket head cap screws	112	47,3
622 512 99	4030 ; 4040	5/8" x 1 3/4"	Hexagon socket head cap screws	170	89,0
622 515 99	4545	3/4" x 2"	Hexagon socket head cap screws	190	147
622 516 99	5050	7/8" x 2 1/4"	Hexagon socket head cap screws	270	227

Welding Hubs for Taper Bushes

Material: Steel (St52 or comparable), good weldable.

Hub for fixing a chain plate wheel or similar parts with a
low priced taper bush onto a shaft.
Taper bush and chain plate wheel have to be ordered separately.
Recommended bore tolerance: H8.

Before welding, a taper bush should be mounted with a piece of
shaft into the welding hub to avoid deforming by heat.

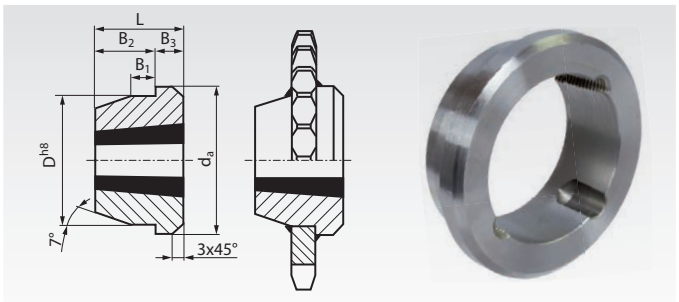

Ordering Details: e.g.: Product No. 140 901 01, Welding Hub for Taper Bush 1210

Product No.	For Taper Bush Type	d_a mm	D^{h8} mm	B_1 mm	B_2 mm	B_3 mm	L mm	Weight kg	Bush bore size min. mm	Bush bore size max. mm
140 901 01	1210	73	60	10	16	9	25	0,31	10	32
140 901 02	1215	76	60	11	22	16	38	0,50	14	32
140 901 03	1610	83	70	10	16	9	25	0,37	12	42
140 901 04	1615	83	70	11	22	16	38	0,60	12	42
140 901 05	2012	96	90	12	22	10	32	0,72	12	50
140 901 06	2517	127	110	13	26	19	45	1,8	15	65
140 901 07	3020	152	130	18	27	24	51	2,6	20	75
140 901 08	3030	152	130	19	51	25	76	3,6	30	75
140 901 09	3525	184	155	25	40	25	65	7,3	35	90
140 901 10	3535	184	155	25	57	32	89	6,4	30	90
140 901 11	4040	225	195	35	70	32	102	13,4	40	100
140 901 12	4545	254	220	40	76	38	114	20,0	55	110
140 901 13	5050	276	242	40	89	38	127	25,0	70	125

Sprockets KRS with One-Sided Hub, Pitch 4mm and ISO 03

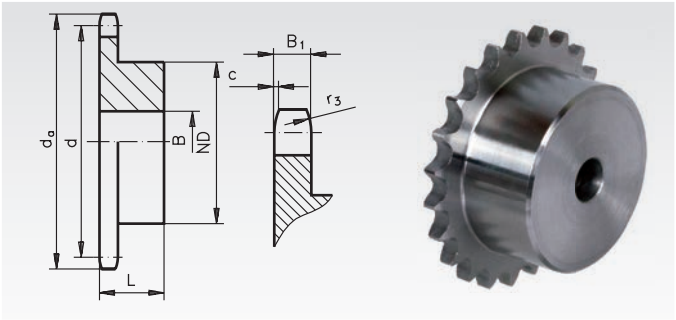

Material: Low-carbon steel, not hardable.
Pre-bored.

Ordering Details: e.g.: Product No. 100 012 00, KRS, Pitch 4 mm, 12 Teeth

Pitch 4 mm,
B_1 = 2.45 mm, c = 0.33 mm, r_3 = 3.75 mm

Product No.	Number of teeth	d_a mm	d mm	ND mm	B mm	L mm	Weight g
100 012 00	12	16,9	15,45	10	5	11	8
100 013 00	13	18,2	16,71	11	5	12	8
100 014 00	14	19,5	17,98	12,5	5	12	11
100 015 00	15	20,8	19,24	13,5	5	12	14
100 017 00	17	23,4	21,77	16	5	12	19
100 019 00	19	26,0	24,30	18	8	12	22
100 021 00	21	28,5	26,84	20	8	12	28
100 023 00	23	31,1	29,38	22	8	14	41
100 024 00	24	32,4	30,65	25	8	14	51
100 025 00	25	33,7	31,94	25	8	14	52
100 030 00	30	40,1	38,27	28	8	14	71
100 038 00	38	50,3	48,44	32	8	16	112
100 045 00	45	59,2	57,34	38	8	16	161
100 057 00	57	74,5	72,61	50	8	16	276
100 076 00	76	98,7	96,79	63	8	18	508
100 083 00	95	122,9	121,00	63	10	18	582
100 088 00	114	147,1	145,17	63	10	20	708

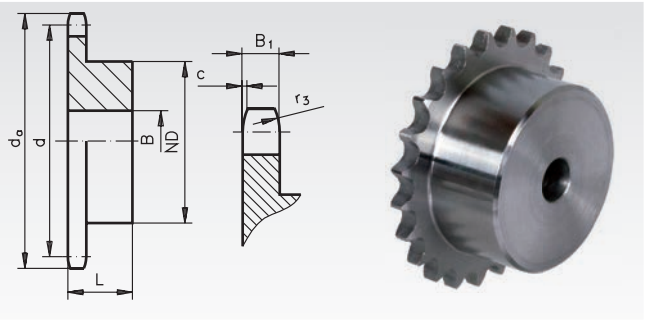

Material: Low-carbon steel, not hardable.
Pre-bored.

Ordering Details: e.g.: Product No. 100 311 00, KRS, ISO 03, 11 Teeth

ISO 03, Pitch 5 mm,
B_1= 2.3 mm, c= 0.5 mm, r_3= 5 mm

Product No.	Number of teeth	d_a mm	d mm	ND mm	B mm	L mm	Weight g
100 311 00	11	19,8	17,75	11	6	10	9
100 312 00	12	21,4	19,32	12	6	10	13
100 313 00	13	22,9	20,89	14	6	10	17
100 314 00	14	24,5	22,47	15	6	10	19
100 315 00	15	26,1	24,04	16	6	10	21
100 317 00	17	29,3	27,20	18	8	13	28
100 319 00	19	32,5	30,38	18	8	13	47
100 321 00	21	35,7	33,54	20	8	13	57
100 323 00	23	38,9	36,72	20	8	13	76
100 325 00	25	42,1	39,89	20	8	13	90
100 330 00	30	50,1	47,83	25	8	15	158
100 338 00	38	62,8	60,54	30	8	15	207
100 345 00	45	74,0	71,68	55	10	16	314
100 357 00	57	93,1	90,76	63	12	16	431



Reworking within 24h-service possible. Custom made parts on request.

Sprockets KRS with One-Sided Hub, ISO 04

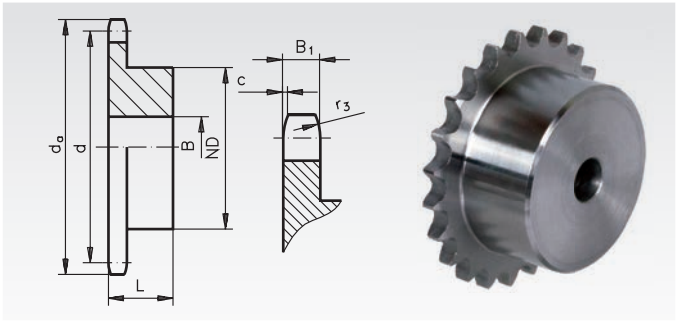

Material: Low-carbon steel, not hardable. Pre-bored.
Sprockets marked with 1) made from St52 with welded in hub.

Ordering Details: e.g.: Product No. 100 608 00, KRS, ISO 04, 8 Teeth

ISO 04, Pitch 6 mm, B_1 = 2.6 mm, c = 0.7 mm, r_3 = 6 mm

Product No.	Number of teeth	d_a mm	d mm	ND mm	B mm	L mm	Weight g
100 608 00	8	18,0	15,67	9,8	5	10	6
100 609 00	9	19,9	17,54	11,5	5	10	8
100 610 00	10	21,7	19,42	13	6	10	10
100 611 00	11	23,6	21,30	14	6	10	12
100 612 00	12	25,4	23,18	16	6	10	17
100 613 00	13	27,3	25,05	18	8	10	19
100 614 00	14	29,2	26,96	20	8	10	24
100 615 00	15	31,0	28,86	20	8	10	25
100 616 00	16	33,0	30,76	20	8	13	33
100 617 00	17	35,0	32,65	20	8	13	35
100 618 00	18	36,9	34,55	20	8	13	37
100 619 00	19	38,8	36,44	20	8	13	38
100 620 00	20	40,7	38,34	20	8	13	42
100 621 00	21	42,6	40,25	25	8	13	56
100 622 00	22	44,5	42,16	25	8	13	60
100 623 00	23	46,4	44,06	25	8	13	63
100 624 00	24	48,3	45,96	25	8	13	64
100 625 00	25	50,2	47,87	25	8	13	65
100 626 00	26	52,1	49,76	30	8	15	98
100 627 00	27	54,0	51,67	30	8	15	101
100 628 00	28	55,9	53,58	30	8	15	103
100 630 00	30	59,8	57,42	30	8	15	111
100 632 00	32	63,6	61,21	30	10	15	118
100 635 00	35	69,3	66,93	30	10	15	126
100 636 00	36	71,2	68,84	30	10	15	132
100 638 00	38	75,0	72,66	30	10	15	140
100 640 00	40	78,9	76,47	30	10	15	146
100 645 00	45	88,5	86,01	40	10	18	229
100 657 00	57	111,4	108,93	50	12	20	462
100 676 00	76[1)]	147,6	145,19	80	16	34	773

Plate wheels KRL, ISO 04

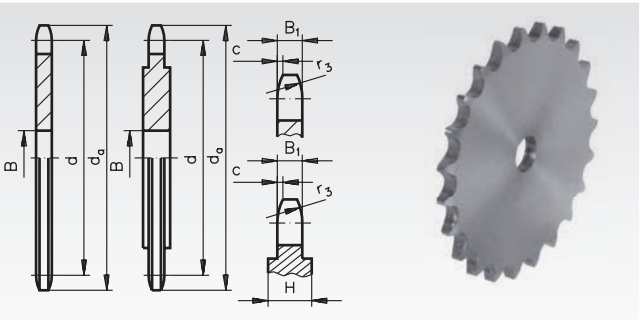

Material: Low-carbon steel, not hardable. Pre-bored.
Pitch 6 mm KRL from a Teeth Number of 54 reinforced (H = 4 mm, see drawing).

Ordering Details: e.g.: Product No. 100 708 00, KRL, ISO 04, 8 Teeth

ISO 04, Pitch 6 mm, B_1= 2.6 mm, c= 0.7 mm, r_3= 6 mm

Product No.	Number of teeth	d_a mm	d mm	B mm	Weight g
100 708 00	8	18,0	15,67	5	2
100 709 00	9	19,9	17,54	5	3
100 710 00	10	21,7	19,42	6	4
100 711 00	11	23,6	21,30	6	5
100 712 00	12	25,4	23,18	6	6
100 713 00	13	27,3	25,05	8	7
100 714 00	14	29,2	26,96	8	8
100 715 00	15	31,0	28,86	8	10
100 716 00	16	33,0	30,76	8	12
100 717 00	17	35,0	32,65	8	13
100 718 00	18	36,9	34,55	8	15
100 719 00	19	38,8	36,44	8	16
100 720 00	20	40,7	38,34	8	19
100 721 00	21	42,6	40,25	8	21
100 722 00	22	44,5	42,16	8	23
100 723 00	23	46,4	44,06	8	26
100 724 00	24	48,3	45,96	8	29
100 725 00	25	50,2	47,87	8	30
100 726 00	26	52,1	49,77	8	34
100 727 00	27	54,0	51,67	8	35
100 728 00	28	55,9	53,58	8	38
100 730 00	30	59,8	57,42	8	45
100 732 00	32	63,6	61,21	10	47
100 735 00	35	69,3	66,93	10	63
100 736 00	36	71,2	68,84	10	67
100 738 00	38	75,0	72,66	10	75
100 740 00	40	78,9	76,47	10	85
100 742 00	42	82,7	80,28	12	90
100 745 00	45	88,5	86,01	12	108
100 748 00	48	94,2	91,74	12	118
100 750 00	50	98,0	95,55	12	128
100 754 00	54	105,6	103,17	12	220
100 757 00	57	111,4	108,93	12	254
100 760 00	60	117,1	114,62	12	291
100 770 00	70	136,2	133,73	16	401
100 776 00	76	147,6	145,19	16	458
100 780 00	80	155,3	152,82	16	508
100 783 00	95	183,9	181,47	16	732
100 788 00	114	220,2	217,75	16	1070



Reworking within 24h-service possible. Custom made parts on request.

Sprockets KRS with One-Sided Hub, ISO 05 B-1

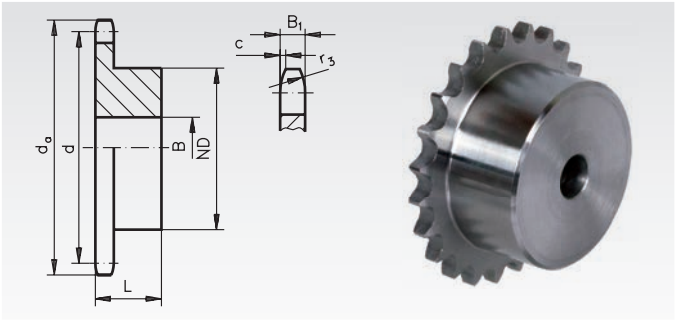

Material: Low-carbon steel, not hardable. Pre-bored.
Sprockets marked with 1) with welded in hub.

Ordering Details: e.g.: Product No. 100 808 00, KRS, ISO 05 B-1, 8 Teeth

ISO 05 B-1, Pitch 8 mm, B_1 = 2.8 mm, c = 1.0 mm, r_3 = 8 mm

Product No.	Number of teeth	d_a mm	d mm	ND mm	B mm	L mm	Weight g
100 808 00	8	24,0	20,90	13	6	12	13
100 809 00	9	26,6	23,39	15	6	12	18
100 810 00	10	29,2	25,89	17	8	12	21
100 811 00	11	31,7	28,39	18	8	13	27
100 812 00	12	34,2	30,91	20	8	13	34
100 813 00	13	36,7	33,42	23	8	13	44
100 814 00	14	39,2	35,95	25	8	13	54
100 815 00	15	41,7	38,48	28	8	13	65
100 816 00	16	44,3	41,01	30	8	14	80
100 817 00	17	46,8	43,53	30	8	14	85
100 818 00	18	49,3	46,07	30	8	14	88
100 819 00	19	51,9	48,61	30	8	14	93
100 820 00	20	54,4	51,14	30	8	14	97
100 821 00	21	57,0	53,68	35	8	14	124
100 822 00	22	59,5	56,21	35	8	14	127
100 823 00	23	62,0	58,75	35	8	14	131
100 824 00	24	64,6	61,29	35	8	14	140
100 825 00	25	67,5	63,83	35	8	14	142
100 826 00	26	69,5	66,37	40	10	16	192
100 827 00	27	72,2	68,91	40	10	16	195
100 828 00	28	74,8	71,45	40	10	16	202
100 830 00	30	79,8	76,53	40	10	16	205
100 832 00	32	84,9	81,61	40	12	16	214
100 835 00	35	92,5	89,25	40	12	16	236
100 836 00	36	95,0	91,79	40	12	16	245
100 838 00	38	100,2	96,88	40	12	16	267
100 840 00	40	105,3	101,97	40	12	16	292
100 845 00	45	118,0	114,69	60	12	20	565
100 857 00	57[1)]	148,6	145,22	80	14	20	1101
100 876 00	76[1)]	197,7	193,59	80	20	25	1749

Plate wheels KRL, ISO 05 B-1

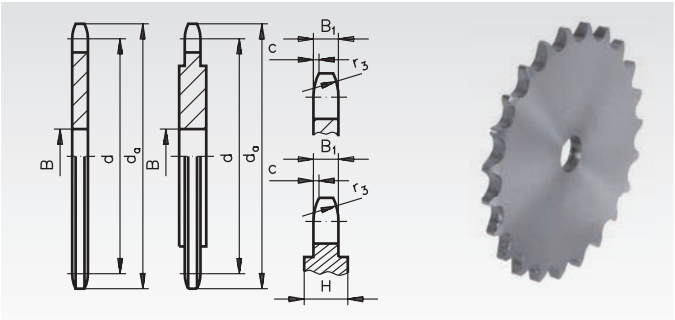

Material: Low-carbon steel, not hardable.
Pre-bored.
Pitch 8 mm KRL from a Teeth Number of 48 reinforced (H = 4 mm, see drawing).

Ordering Details: e.g.: Product No. 100 908 00, KRL, ISO 05 B-1, 8 Teeth

ISO 05 B-1, Pitch 8 mm, B_1= 2.8 mm, c= 1.0 mm, r_3= 8 mm

Product No.	Number of teeth	d_a mm	d mm	B mm	Weight g
100 908 00	8	24,0	20,90	6	5
100 909 00	9	26,6	23,39	6	6
100 910 00	10	29,2	25,89	8	9
100 911 00	11	31,7	28,39	8	10
100 912 00	12	34,2	30,91	8	13
100 913 00	13	36,7	33,42	8	15
100 914 00	14	39,2	35,95	8	18
100 915 00	15	41,7	38,48	8	21
100 916 00	16	44,3	41,01	8	24
100 917 00	17	46,8	43,53	8	28
100 918 00	18	49,3	46,07	8	32
100 919 00	19	51,9	48,61	8	36
100 920 00	20	54,4	51,14	8	41
100 921 00	21	57,0	53,68	10	42
100 922 00	22	59,5	56,21	10	48
100 923 00	23	62,0	58,75	10	53
100 924 00	24	64,6	61,29	10	59
100 925 00	25	67,5	63,83	10	64
100 926 00	26	69,5	66,37	10	65
100 927 00	27	72,2	68,91	10	71
100 928 00	28	74,8	71,45	10	81
100 930 00	30	79,8	76,53	10	93
100 932 00	32	84,9	81,61	10	105
100 935 00	35	92,5	89,25	10	122
100 936 00	36	95,0	91,79	10	137
100 938 00	38	100,2	96,88	12	149
100 940 00	40	105,3	101,97	12	173
100 942 00	42	110,4	107,05	12	191
100 945 00	45	118,0	114,69	12	211
100 948 00	48	125,6	122,32	12	340
100 950 00	50	130,7	127,41	12	354
100 954 00	54	140,9	137,59	16	420
100 957 00	57	148,6	145,22	16	475
100 960 00	60	156,2	152,85	16	507
100 965 00	65	169,6	165,58	16	620
100 970 00	70	182,4	178,31	16	680
100 976 00	76	197,7	193,59	20	836
100 980 00	80	207,9	203,77	20	941
100 983 00	95	246,1	241,96	20	1341
100 988 00	114	294,5	290,33	20	1992

Sprockets made from stainless steel page 63.



Reworking within 24h-service possible. Custom made parts on request.

Sprockets with One-Sided Hub, ISO 06 B-1

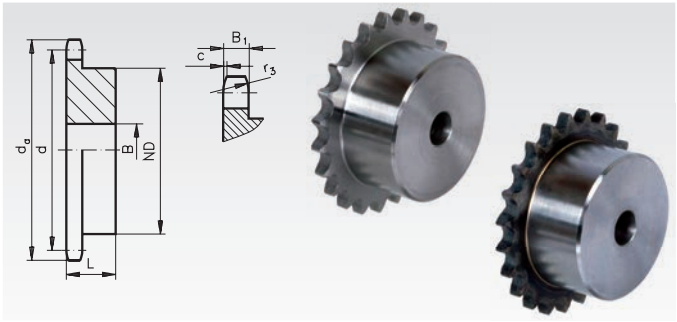

Material: Steel C45, optionally hardened.
Pre-bored.
Sprockets marked with * are made from grey cast iron GG25.

Type KRS: Not hardened. **Type KRG:** Teeth induction hardened.

Ordering Details: e.g.: Product No. 101 108 00, KRS, ISO 06 B-1, 8 Teeth

Plate wheels KRL, ISO 06 B-1

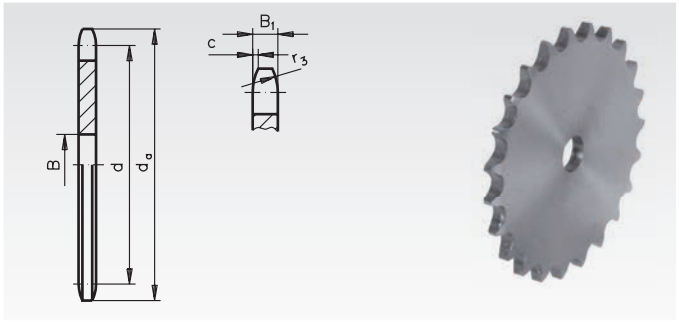

Material: Low-carbon steel, not hardable.
Pre-bored.

Type KRL: Without hub, not hardened.

Ordering Details: e.g.: Product No. 101 208 00, KRL, ISO 06 B-1, 8 Teeth

ISO 06 B-1, Pitch 3/8 x 7/32" KRS and KRG
B_1 = 5.3 mm, c = 1.0 mm, r_3 = 10 mm

Product No. Type KRS	Product No. Type KRG	Number of teeth	d_a mm	d mm	ND mm	B mm	L mm	Weight g
101 108 00	101 881 08	8	28,0	24,89	15	8	22	34
101 109 00	101 881 09	9	31,0	27,85	18	8	22	43
101 110 00	101 881 10	10	34,0	30,82	20	8	22	58
101 111 00	101 881 11	11	37,0	33,80	22	8	25	79
101 112 00	101 881 12	12	40,0	36,80	25	8	25	101
101 113 00	101 881 13	13	43,0	39,79	28	10	25	123
101 114 00	101 881 14	14	46,3	42,80	31	10	25	152
101 115 00	101 881 15	15	49,3	45,81	34	10	25	184
101 116 00	101 881 16	16	52,3	48,82	37	10	28	141
101 117 00	101 881 17	17	55,3	51,83	40	10	28	285
101 118 00	101 881 18	18	58,3	54,85	43	10	28	230
101 119 00	101 881 19	19	61,3	57,87	45	10	28	364
101 120 00	101 881 20	20	64,3	60,89	46	10	28	389
101 121 00	101 881 21	21	68,0	63,91	48	12	28	416
101 122 00	101 881 22	22	71,0	66,93	50	12	28	456
101 123 00	101 881 23	23	73,5	69,95	52	12	28	494
101 124 00	101 881 24	24	77,0	72,97	54	12	28	544
101 125 00	101 881 25	25	80,0	76,00	57	12	28	592
101 126 00	101 881 26	26	83,0	79,02	60	12	28	666
101 127 00	101 881 27	27	86,0	82,05	60	12	28	680
101 128 00	101 881 28	28	89,0	85,07	60	12	28	694
101 130 00	101 881 30	30	94,7	91,12	60	12	30	767
101 132 00	-	32	101,3	97,17	65	14	30	890
101 135 00	-	35	110,4	106,26	65	14	30	948
101 136 00	-	36	113,4	109,29	70	16	30	1024
101 138 00	-	38	119,5	115,35	70	16	30	1109
101 140 00	-	40	125,5	121,40	70	16	30	1160
101 145 00*	-	45	140,7	136,55	70	20	32	1245
101 157 00*	-	57	176,9	172,91	70	20	32	1462
101 176 00*	-	76	234,9	230,49	70	20	32	2177
101 183 00*	-	95	292,5	288,08	80	20	40	3488
101 188 00*	-	114	349,6	345,68	80	20	40	4244



Sprockets marked with * are made from grey cast iron GG25.

ISO 06 B-1, Pitch 3/8 x 7/32" KRL
B_1 = 5.3 mm, c = 1.0 mm, r_3 = 10 mm

Product No. Type KRL	Number of teeth	d_a mm	d mm	B mm	Weight g
101 208 00	8	28,0	24,89	6	14
101 209 00	9	31,0	27,85	8	17
101 210 00	10	34,0	30,82	8	23
101 211 00	11	37,0	33,80	8	28
101 212 00	12	40,0	36,80	8	32
101 213 00	13	43,0	39,79	8	39
101 214 00	14	46,3	42,80	8	46
101 215 00	15	49,3	45,81	8	53
101 216 00	16	52,3	48,82	10	62
101 217 00	17	55,3	51,83	10	72
101 218 00	18	58,3	54,85	10	79
101 219 00	19	61,3	57,87	10	89
101 220 00	20	64,3	60,89	10	101
101 221 00	21	68,0	63,91	10	111
101 222 00	22	71,0	66,93	10	123
101 223 00	23	73,5	69,95	10	140
101 224 00	24	77,0	72,97	10	151
101 225 00	25	80,0	76,02	10	160
101 226 00	26	83,0	79,02	10	175
101 227 00	27	86,0	82,05	10	188
101 228 00	28	89,0	85,07	10	202
101 230 00	30	94,7	91,12	10	235
101 232 00	32	101,3	97,17	12	267
101 235 00	35	110,4	106,26	12	326
101 236 00	36	113,4	109,20	12	351
101 238 00	38	119,5	115,35	12	393
101 240 00	40	125,5	121,40	12	422
101 242 00	42	131,6	127,46	16	461
101 244 00	44	137,6	133,52	16	515
101 245 00	45	140,7	136,55	16	534
101 248 00	48	149,7	145,64	16	653
101 250 00	50	155,7	151,69	20	680
101 254 00	54	167,8	163,82	20	842
101 257 00	57	176,9	172,91	20	863
101 260 00	60	186,0	181,99	20	1010
101 265 00	65	201,6	197,15	20	1108
101 270 00	70	216,7	212,30	20	1326
101 272 00	72	222,8	218,37	20	1386
101 276 00	76	234,9	230,49	20	1555
101 280 00	80	247,1	242,61	20	1758
101 283 00	95	292,5	288,08	25	2400
101 288 00	114	349,5	345,68	25	4923

Sprockets made from stainless steel page 63.
Sprockets ready-to-mount page 64.
Sprockets for Taper clamping bushes page 74.



Reworking within 24h-service possible. Custom made parts on request.

Sprockets KRS with One-Sided Hub, ISO 081

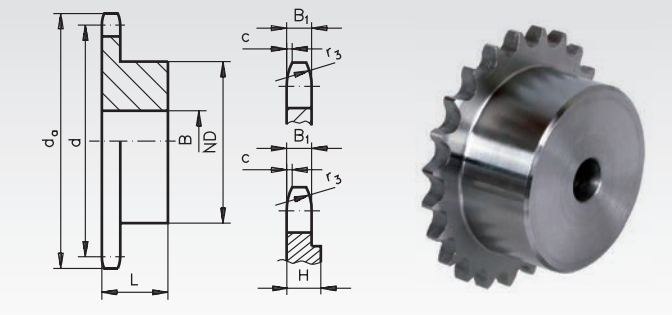

Material: Steel C45, not hardened.
Pre-bored.
Pitch 1/2 x 1/8" KRS from a Teeth Number of 32 reinforced (H = 4 mm, see drawing).

Ordering Details: e.g.: Product No. 102 108 00, KRS, ISO 081, 8 Teeth

ISO 081, Pitch 1/2 x 1/8",
B_1 = 3 mm, c = 1.0 mm, r_3 = 13 mm

Product No.	Number of teeth	d_a mm	d mm	ND mm	B mm	L mm	Weight g
102 108 00	8	37,2	33,18	21	8	14	41
102 109 00	9	41,5	37,13	25	8	14	57
102 110 00	10	46,2	41,10	28	8	14	73
102 111 00	11	49,6	45,07	31	8	16	103
102 112 00	12	53,9	49,07	35	8	16	129
102 113 00	13	58,4	53,07	39	8	16	158
102 114 00	14	62,8	57,07	43	8	16	194
102 115 00	15	66,8	61,09	47	8	16	228
102 116 00	16	70,9	65,10	50	10	18	291
102 117 00	17	74,9	69,11	50	10	18	300
102 118 00	18	78,9	73,14	50	10	18	303
102 119 00	19	82,9	77,16	50	10	18	317
102 120 00	20	86,9	81,19	50	10	18	329
102 121 00	21	91,0	85,22	60	12	20	478
102 122 00	22	95,0	89,24	60	12	20	490
102 123 00	23	99,0	93,27	60	12	20	508
102 124 00	24	103,0	97,29	60	12	20	517
102 125 00	25	107,1	101,33	60	12	20	537
102 126 00	26	111,2	105,36	70	16	20	676
102 127 00	27	115,4	109,40	70	16	20	689
102 128 00	28	119,4	113,42	70	16	20	697
102 130 00	30	127,5	121,50	70	16	20	733
102 132 00	32	135,5	129,56	70	16	20	853
102 134 00	34	143,6	137,64	70	16	20	931
102 135 00	35	147,6	141,68	70	16	20	942
102 136 00	36	151,7	145,72	70	16	25	1062
102 138 00	38	159,8	153,80	70	16	25	1178
102 140 00	40	167,8	161,87	70	16	25	1254

Plate wheels KRL, ISO 081

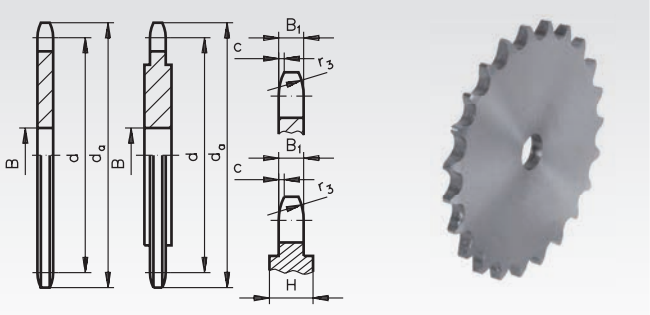

Material: Low-carbon steel, not hardable.
Pre-bored.
Pitch 1/2 x 1/8" KRL from a Teeth Number of 32 reinforced (H = 4 mm, see drawing, from a Teeth Number of 90 H = 6 mm).

Ordering Details: e.g.: Product No. 102 208 00, KRL, ISO 081, 8 Teeth

ISO 081, Pitch 1/2 x 1/8",
B_1 = 3 mm, c = 1.0 mm, r_3 = 13 mm

Product No.	Number of teeth	d_a mm	d mm	B mm	Weight g
102 208 00	8	37,2	33,18	8	15
102 209 00	9	41,5	37,13	8	19
102 210 00	10	46,2	41,10	8	26
102 211 00	11	49,6	45,07	8	30
102 212 00	12	53,9	49,07	8	38
102 213 00	13	58,4	53,07	8	45
102 214 00	14	62,8	57,07	8	49
102 215 00	15	66,8	61,09	8	58
102 216 00	16	70,9	65,10	10	66
102 217 00	17	74,9	69,11	10	80
102 218 00	18	78,9	73,14	10	88
102 219 00	19	82,9	77,16	10	101
102 220 00	20	86,9	81,19	10	110
102 221 00	21	91,0	85,22	10	122
102 222 00	22	95,0	89,24	10	139
102 223 00	23	99,0	93,27	10	148
102 224 00	24	103,0	97,29	12	153
102 225 00	25	107,1	101,33	12	187
102 226 00	26	111,2	105,36	12	199
102 227 00	27	115,4	109,40	12	211
102 228 00	28	119,4	113,42	12	222
102 230 00	30	127,5	121,50	12	260
102 232 00	32	135,5	129,56	12	361
102 234 00	34	143,6	137,64	12	435
102 235 00	35	147,6	141,68	12	451
102 236 00	36	151,7	145,72	16	445
102 238 00	38	159,8	153,80	16	398
102 240 00	40	167,8	161,87	16	442
102 242 00	42	175,4	169,95	16	640
102 245 00	45	187,5	182,07	16	705
102 248 00	48	199,7	194,18	20	897
102 250 00	50	207,8	202,26	20	928
102 254 00	54	224,0	218,43	20	1207
102 257 00	57	236,1	230,54	20	1373
102 260 00	60	248,2	242,66	20	1294
102 265 00	65	268,8	262,86	20	1563
102 270 00	70	289,0	283,07	25	1825
102 272 00	72	297,1	291,16	25	1924
102 276 00	76	313,3	307,33	25	2486
102 280 00	80	329,4	323,48	25	2496
102 282 00	90	369,9	363,90	25	4424
102 288 00	114	466,9	460,90	25	6848



Reworking within 24h-service possible. Custom made parts on request.

Sprockets KRS with One-Sided Hub, ISO 083

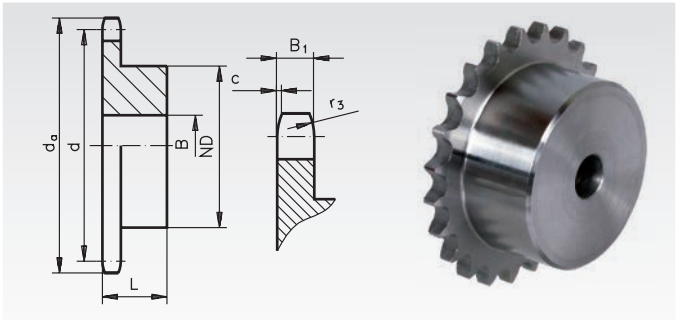

Material: Steel C45, not hardened.
Pre-bored.

Ordering Details: e.g.: Product No. 103 108 00, KRS, ISO 083, 8 Teeth

ISO 083, Pitch 1/2 x 3/16“, B_1 = 4.5 mm, c = 1.3 mm, r_3 = 13 mm

Product No.	Number of teeth	d_a mm	d mm	ND mm	B mm	L mm	Weight g
103 108 00	8	38,5	33,18	21	8	14	46
103 109 00	9	41,5	37,13	25	8	14	64
103 110 00	10	46,2	41,10	28	8	14	79
103 111 00	11	49,6	45,07	31	8	16	110
103 112 00	12	53,9	49,07	35	8	16	138
103 113 00	13	58,4	53,07	39	8	16	170
103 114 00	14	62,8	57,07	43	8	16	203
103 115 00	15	66,8	61,09	47	8	16	243
103 116 00	16	70,9	65,10	50	10	18	299
103 117 00	17	74,9	69,11	50	10	18	318
103 118 00	18	78,9	73,14	50	10	18	330
103 119 00	19	82,9	77,16	50	10	18	344
103 120 00	20	86,9	81,19	50	10	18	364
103 121 00	21	91,0	85,22	60	12	20	511
103 122 00	22	95,0	89,24	60	12	20	527
103 123 00	23	99,0	93,27	60	12	20	544
103 124 00	24	103,0	97,29	60	12	20	569
103 125 00	25	107,1	101,33	60	12	20	586
103 126 00	26	111,2	105,36	70	16	20	725
103 127 00	27	115,4	109,40	70	16	20	750
103 128 00	28	119,4	113,42	70	16	20	765
103 130 00	30	127,5	121,50	70	16	20	833
103 132 00	32	135,5	129,56	70	16	20	882
103 134 00	34	143,6	137,64	70	16	20	933
103 135 00	35	147,6	141,68	70	16	20	947
103 136 00	36	151,7	145,72	70	16	25	1103
103 138 00	38	159,8	153,80	70	16	25	1176
103 140 00	40	167,8	161,87	70	16	25	1248

Plate wheels KRL, ISO 083

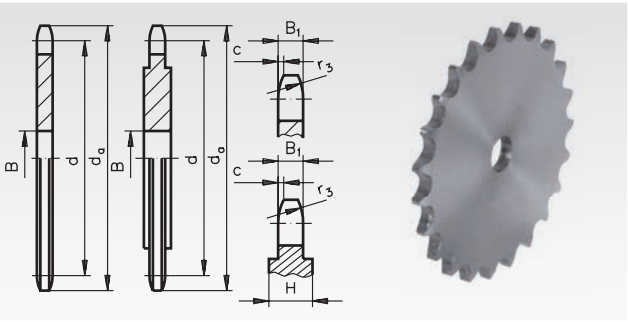

Material: Low-carbon steel, not hardable.
Pre-bored.
Pitch 1/2 x 3/16“ KRL from a Teeth Number of 90 reinforced (H = 6 mm, see drawing).

Ordering Details: e.g.: Product No. 103 208 00, KRL, ISO 083, 8 Teeth

ISO 083, Pitch 1/2 x 3/16“, B_1 = 4.5 mm, c = 1.3 mm, r_3 = 13 mm

Product No.	Number of teeth	d_a mm	d mm	B mm	Weight g
103 208 00	8	38,5	33,18	8	21
103 209 00	9	41,5	37,13	8	29
103 210 00	10	46,2	41,10	8	36
103 211 00	11	49,6	45,07	8	42
103 212 00	12	53,9	49,07	8	50
103 213 00	13	58,4	53,07	8	61
103 214 00	14	62,8	57,07	8	74
103 215 00	15	66,8	61,09	8	86
103 216 00	16	70,9	65,10	10	99
103 217 00	17	74,9	69,11	10	112
103 218 00	18	78,9	73,14	10	125
103 219 00	19	82,9	77,16	10	140
103 220 00	20	86,9	81,19	10	154
103 221 00	21	91,0	85,22	10	170
103 222 00	22	95,0	89,24	10	180
103 223 00	23	99,0	93,27	10	210
103 224 00	24	103,0	97,29	12	223
103 225 00	25	107,1	101,33	12	251
103 226 00	26	111,2	105,36	12	264
103 227 00	27	115,4	109,40	12	297
103 228 00	28	119,4	113,42	12	306
103 230 00	30	127,5	121,50	12	324
103 232 00	32	135,5	129,56	12	405
103 234 00	34	143,6	137,64	12	454
103 235 00	35	147,6	141,68	12	495
103 236 00	36	151,7	145,72	16	531
103 238 00	38	159,8	153,80	16	566
103 240 00	40	167,8	161,87	16	632
103 242 00	42	175,4	169,95	16	714
103 245 00	45	187,5	182,07	16	773
103 247 00	47	195,6	190,14	20	886
103 248 00	48	199,7	194,18	20	934
103 250 00	50	207,8	202,26	20	975
103 254 00	54	224,0	218,43	20	1170
103 257 00	57	236,1	230,54	20	1348
103 260 00	60	248,2	242,66	20	1490
103 265 00	65	268,8	262,86	20	1657
103 270 00	70	289,0	283,07	25	1898
103 272 00	72	297,1	291,16	25	2119
103 276 00	76	313,3	307,33	25	2339
103 280 00	80	329,4	323,48	25	2364
103 282 00	90	369,9	363,90	25	4672
103 288 00	114	466,9	460,90	25	7284



Reworking within 24h-service possible. Custom made parts on request.

Sprockets with One-Sided Hub, ISO 08 B-1

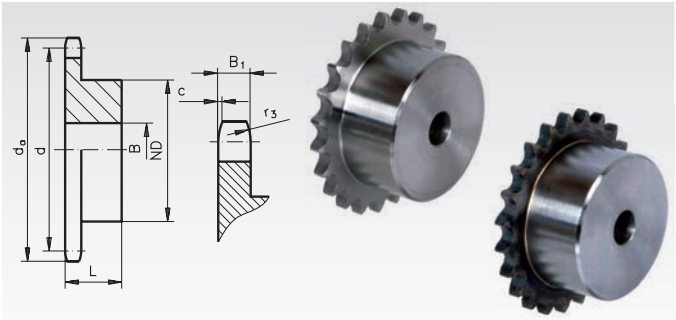

Material: Steel C45, optionally hardened.
Pre-bored.
Sprockets marked with * are made from grey cast iron GG25.

Type KRS: Not hardened. **Type KRG:** Teeth induction hardened.

Ordering Details: e.g.: Product No. 105 108 00, KRS, ISO 08 B-1, 8 Teeth

ISO 08 B-1, Pitch 1/2 x 5/16" KRS and KRG
B_1 = 7.2 mm, c = 1.3 mm, r_3 = 13 mm

Product No. Type KRS	Product No. Type KRG	Number of teeth	d_a mm	d mm	ND mm	B mm	L mm	Weight g
105 108 00	105 881 08	8	37,2	33,18	20	10	25	66
105 109 00	105 881 09	9	41,0	37,13	24	10	25	96
105 110 00	105 881 10	10	45,2	41,10	26	10	25	120
105 111 00	105 881 11	11	48,7	45,07	29	10	25	148
105 112 00	105 881 12	12	53,0	49,07	33	10	28	212
105 113 00	105 881 13	13	57,4	53,07	37	10	28	264
105 114 00	105 881 14	14	61,8	57,07	41	10	28	323
105 115 00	105 881 15	15	65,5	61,09	45	10	28	385
105 116 00	105 881 16	16	69,5	65,10	50	12	28	461
105 117 00	105 881 17	17	73,6	69,11	52	12	28	502
105 118 00	105 881 18	18	77,8	73,14	56	12	28	588
105 119 00	105 881 19	19	81,7	77,16	60	12	28	670
105 120 00	105 881 20	20	85,8	81,19	64	12	28	758
105 121 00	105 881 21	21	89,7	85,22	68	14	28	855
105 122 00	105 881 22	22	93,8	89,24	70	14	28	917
105 123 00	105 881 23	23	98,2	93,27	70	14	28	948
105 124 00	105 881 24	24	101,8	97,29	70	14	28	972
105 125 00	105 881 25	25	105,8	101,33	70	14	28	1002
105 126 00	105 881 26	26	110,0	105,36	70	16	30	1096
105 127 00	105 881 27	27	114,0	109,40	70	16	30	1140
105 128 00	105 881 28	28	118,0	113,42	70	16	30	1167
105 129 00	105 881 29	29	122,0	117,46	80	16	30	1411
105 130 00	105 881 30	30	126,1	121,50	80	16	30	1446
105 132 00	-	32	134,3	129,56	90	16	30	1786
105 134 00	-	34	142,6	137,64	90	16	30	1867
105 135 00	-	35	146,7	141,68	90	16	30	1921
105 136 00	-	36	151,0	145,72	90	16	35	2208
105 138 00	-	38	158,6	153,80	90	16	35	2317
105 140 00	-	40	166,8	161,87	90	16	35	2444
105 145 00*	-	45	188,0	182,07	70	24	40	1977
105 157 00*	-	57	236,4	230,54	70	24	40	2381
105 176 00*	-	76	313,3	307,33	80	24	40	4333
105 183 00*	-	95	390,1	384,11	80	24	45	4871
105 188 00*	-	114	466,9	460,90	80	24	45	7049



Sprockets marked with * are made from grey cast iron GG25.



Reworking within 24h-service possible. Custom made parts on request.

Plate wheels KRL, ISO 08 B-1

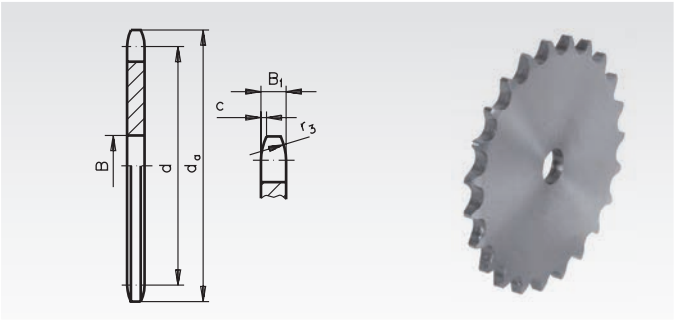

Material: Low-carbon steel, not hardable.
Pre-bored.

Type KRL: Without hub, not hardened.

Ordering Details: e.g.: Product No. 105 208 00, KRL, ISO 08 B-1, 8 Teeth

ISO 08 B-1, Pitch 1/2 x 5/16" KRL
B_1 = 7.2 mm, c = 1.3 mm, r_3 = 13 mm

Product No. Type KRL	Number of teeth	d_a mm	d mm	B mm	Weight g
105 208 00	8	37,2	33,18	8	33
105 209 00	9	41,0	37,13	8	42
105 210 00	10	45,2	41,10	8	54
105 211 00	11	48,7	45,07	10	67
105 212 00	12	53,0	49,07	10	81
105 213 00	13	57,4	53,07	10	96
105 214 00	14	61,8	57,07	10	107
105 215 00	15	65,5	61,09	10	135
105 216 00	16	69,5	65,10	10	153
105 217 00	17	73,6	69,11	10	177
105 218 00	18	77,8	73,14	10	200
105 219 00	19	81,7	77,16	10	230
105 220 00	20	85,8	81,19	10	255
105 221 00	21	89,7	85,22	12	279
105 222 00	22	93,8	89,24	12	312
105 223 00	23	98,2	93,27	12	338
105 224 00	24	101,8	97,29	12	363
105 225 00	25	105,8	101,33	12	392
105 226 00	26	110,0	105,36	16	432
105 227 00	27	114,0	109,40	16	456
105 228 00	28	118,0	113,42	16	500
105 229 00	29	122,0	117,46	16	537
105 230 00	30	126,1	121,50	16	573
105 232 00	32	134,3	129,56	16	664
105 234 00	34	142,6	137,64	16	744
105 235 00	35	146,7	141,68	16	782
105 236 00	36	151,0	145,72	16	828
105 238 00	38	158,6	153,80	16	933
105 240 00	40	166,8	161,87	16	1060
105 242 00	42	175,4	169,95	20	1151
105 244 00	44	183,8	178,03	20	1283
105 245 00	45	188,0	182,07	20	1363
105 246 00	46	192,1	186,10	20	1493
105 248 00	48	200,3	194,18	20	1523
105 250 00	50	208,3	202,26	20	1639
105 254 00	54	224,1	218,43	20	1925
105 257 00	57	236,4	230,54	20	2149
105 260 00	60	248,6	242,66	20	2492
105 265 00	65	269,0	262,86	25	2834
105 270 00	70	289,0	283,07	25	3250
105 272 00	72	297,2	291,16	25	3482
105 276 00	76	313,3	307,33	25	3887
105 280 00	80	329,4	323,48	25	4327
105 283 00	95	390,1	384,11	25	6150
105 288 00	114	466,9	460,90	25	9028
105 290 00	120	491,2	485,16	25	10005

Sprockets made from stainless steel page 63.
Sprockets ready-to-mount page 66.
Sprockets for Taper clamping bushes page 74.

Sprockets with One-Sided Hub, ISO 10 B-1

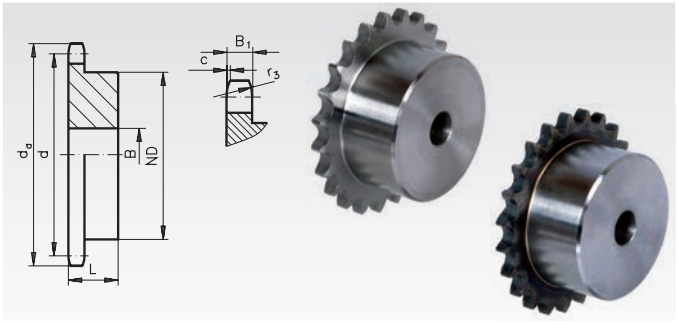

Material: Steel C45, optionally hardened.
Pre-bored.
Sprockets marked with * are made from grey cast iron GG25.

Type KRS: Not hardened. **Type KRG:** Teeth induction hardened.

Ordering Details: e.g.: Product No. 106 108 00, KRS, ISO 10 B-1, 8 Teeth

ISO 10 B-1, Pitch 5/8 x 3/8" KRS and KRG
B_1 = 9.1 mm, c = 1.6 mm, r_3 = 16 mm

Product No. Type KRS	Product No. Type KRG	Number of teeth	d_a mm	d mm	ND mm	B mm	L mm	Weight kg
106 108 00	106 881 08	8	47,0	41,48	25	10	25	0,12
106 109 00	106 881 09	9	52,6	46,42	30	10	25	0,17
106 110 00	106 881 10	10	57,5	51,37	35	10	25	0,23
106 111 00	106 881 11	11	63,0	56,34	37	12	30	0,30
106 112 00	106 881 12	12	68,0	61,34	42	12	30	0,38
106 113 00	106 881 13	13	73,0	66,32	47	12	30	0,47
106 114 00	106 881 14	14	78,0	71,34	52	12	30	0,57
106 115 00	106 881 15	15	83,0	76,36	57	12	30	0,68
106 116 00	106 881 16	16	88,0	81,37	60	12	30	0,76
106 117 00	106 881 17	17	93,0	86,39	60	12	30	0,81
106 118 00	106 881 18	18	98,3	91,42	70	14	30	1,02
106 119 00	106 881 19	19	103,3	96,45	70	14	30	1,07
106 120 00	106 881 20	20	108,4	101,49	75	14	30	1,22
106 121 00	106 881 21	21	113,4	106,52	75	16	30	1,25
106 122 00	106 881 22	22	118,0	111,55	80	16	30	1,40
106 123 00	106 881 23	23	123,4	116,58	80	16	30	1,47
106 124 00	106 881 24	24	128,3	121,62	80	16	30	1,53
106 125 00	106 881 25	25	134,0	126,66	80	16	30	1,59
106 126 00	-	26	139,0	131,70	85	20	35	1,97
106 127 00	-	27	144,0	136,75	85	20	35	2,05
106 128 00	-	28	148,7	141,78	90	20	35	2,24
106 130 00	-	30	158,8	151,87	90	20	35	2,43
106 132 00	-	32	168,9	161,95	95	20	35	2,73
106 134 00	-	34	179,0	172,05	95	20	35	2,90
106 135 00	-	35	184,1	177,10	95	20	35	2,98
106 136 00	-	36	189,1	182,15	100	20	35	3,25
106 138 00	-	38	199,2	192,24	100	20	35	3,47
106 140 00	-	40	209,3	202,34	100	20	35	3,63
106 145 00*	-	45	235,0	227,58	80	24	40	3,05
106 157 00*	-	57	296,0	288,18	90	24	45	4,25
106 176 00*	-	76	392,1	384,16	90	24	50	6,39
106 183 00*	-	95	488,5	480,14	100	24	56	9,66
106 188 00*	-	114	584,1	576,13	100	24	56	13,49



Sprockets marked with * are made from grey cast iron GG25.



Reworking within 24h-service possible. Custom made parts on request.

Plate wheels KRL, ISO 10 B-1

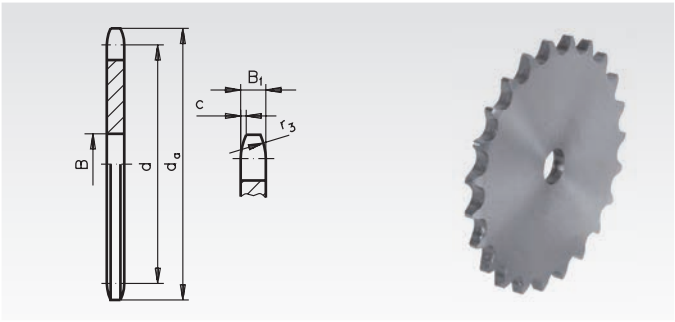

Material: Low-carbon steel, not hardable.
Pre-bored.

Type KRL: Without hub, not hardened.

Ordering Details: e.g.: Product No. 106 208 00, KRL, ISO 10 B-1, 8 Teeth

ISO 10 B-1, Pitch 5/8 x 3/8" KRL
B_1 = 9.1 mm, c = 1.6 mm, r_3 = 16 mm

Product No. Type KRL	Number of teeth	d_a mm	d mm	B mm	Weight kg
106 208 00	8	47,0	41,48	10	0,07
106 209 00	9	52,6	46,42	10	0,09
106 210 00	10	57,7	51,37	10	0,11
106 211 00	11	63,0	56,34	10	0,14
106 212 00	12	68,0	61,34	10	0,17
106 213 00	13	73,0	66,32	10	0,20
106 214 00	14	78,0	71,34	12	0,23
106 215 00	15	83,0	76,36	12	0,27
106 216 00	16	88,0	81,37	12	0,32
106 217 00	17	93,0	86,38	12	0,35
106 218 00	18	98,3	91,42	12	0,40
106 219 00	19	103,3	96,45	12	0,44
106 220 00	20	108,4	101,49	12	0,50
106 221 00	21	113,4	106,52	12	0,56
106 222 00	22	118,0	111,55	12	0,62
106 223 00	23	123,5	116,58	12	0,67
106 224 00	24	128,3	121,62	12	0,72
106 225 00	25	134,0	126,66	12	0,78
106 226 00	26	139,0	131,70	16	0,87
106 227 00	27	144,0	136,75	16	0,95
106 228 00	28	148,7	141,78	16	1,01
106 229 00	29	153,8	146,83	16	1,13
106 230 00	30	158,8	151,87	16	1,15
106 232 00	32	168,9	161,95	16	1,32
106 234 00	34	179,0	172,05	16	1,53
106 235 00	35	184,1	177,10	16	1,61
106 236 00	36	189,1	182,15	20	1,70
106 238 00	38	199,2	192,24	20	1,87
106 240 00	40	209,3	202,34	20	2,13
106 242 00	42	219,9	212,44	20	2,36
106 244 00	44	230,0	222,53	20	2,57
106 245 00	45	235,0	227,58	20	2,68
106 246 00	46	240,1	232,63	20	2,78
106 248 00	48	250,2	242,73	20	3,01
106 250 00	50	260,3	252,82	20	3,38
106 254 00	54	280,5	273,03	20	3,96
106 257 00	57	296,0	288,18	25	4,34
106 260 00	60	310,8	303,32	25	4,90
106 265 00	65	336,5	328,58	25	5,83
106 270 00	70	361,8	353,84	25	6,76
106 272 00	72	371,9	363,95	25	7,11
106 276 00	76	392,1	384,16	25	7,77
106 280 00	80	412,3	404,35	25	9,03
106 283 00	95	488,5	480,14	30	12,53
106 288 00	114	584,1	576,13	30	21,00

Sprockets made from stainless steel page 63.
Sprockets ready-to-mount page 68.
Sprockets for Taper clamping bushes page 74.

Sprockets with One-Sided Hub, ISO 12 B-1

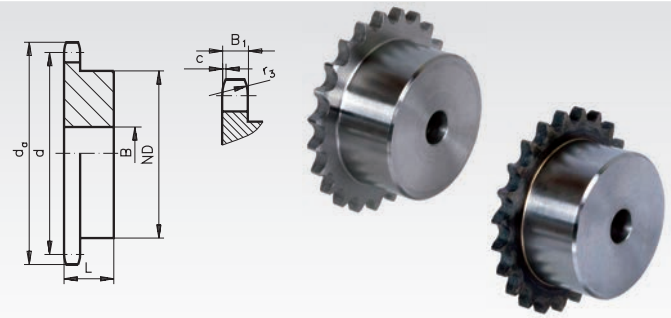

Material: Steel C45, optionally hardened.
Pre-bored.
Sprockets marked with * are made from grey cast iron GG25.

Type KRS: Not hardened. **Type KRG:** Teeth induction hardened.

Ordering Details: e.g.: Product No. 107 108 00, KRS, ISO 12 B-1, 8 Teeth

ISO 12 B-1, Pitch 3/4 x 7/16"
B_1 = 11.1 mm, c = 2.0 mm, r_3 = 19 mm

Product No. Type KRS	Product No. Type KRG	Number of teeth	d_a mm	d mm	ND mm	B mm	L mm	Weight kg
107 108 00	107 881 08	8	57,6	49,78	31	12	30	0,22
107 109 00	107 881 09	9	62,0	55,70	37	12	30	0,30
107 110 00	107 881 10	10	69,0	61,64	42	12	30	0,39
107 111 00	107 881 11	11	75,0	67,61	46	16	35	0,53
107 112 00	107 881 12	12	81,5	73,61	52	16	35	0,67
107 113 00	107 881 13	13	87,5	79,59	58	16	35	0,83
107 114 00	107 881 14	14	93,6	85,61	64	16	35	1,00
107 115 00	107 881 15	15	99,8	91,63	70	16	35	1,18
107 116 00	107 881 16	16	105,5	97,65	75	16	35	1,35
107 117 00	107 881 17	17	111,5	103,67	80	16	35	1,53
107 118 00	107 881 18	18	118,0	109,71	80	16	35	1,61
107 119 00	107 881 19	19	124,2	115,75	80	16	35	1,72
107 120 00	107 881 20	20	129,7	121,78	80	16	35	1,80
107 121 00	107 881 21	21	136,0	127,82	90	20	40	2,35
107 122 00	107 881 22	22	141,8	133,86	90	20	40	2,47
107 123 00	107 881 23	23	149,0	139,90	90	20	40	2,55
107 124 00	107 881 24	24	153,9	145,94	90	20	40	2,68
107 125 00	107 881 25	25	160,0	152,00	90	20	40	2,78
107 126 00	107 881 26	26	165,9	158,04	95	20	40	3,09
107 127 00	107 881 27	27	172,3	164,09	95	20	40	3,20
107 128 00	107 881 28	28	178,0	170,13	95	20	40	3,35
107 130 00	107 881 30	30	190,5	182,25	95	20	40	3,61
107 132 00	107 881 32	32	203,3	194,35	100	20	40	4,10
107 134 00	107 881 34	34	214,6	206,46	100	20	40	4,45
107 135 00	107 881 35	35	221,0	212,52	100	20	40	4,62
107 136 00	107 881 36	36	226,8	218,58	100	20	40	4,77
107 138 00	107 881 38	38	239,0	230,69	100	20	40	5,00
107 140 00	107 881 40	40	251,3	242,81	100	20	40	5,56
107 145 00*	-	45	282,5	273,10	100	24	56	5,38
107 157 00*	-	57	354,0	345,81	100	30	56	7,06
107 176 00*	-	76	469,9	460,99	100	30	56	9,49
107 183 00*	-	95	585,1	576,17	100	30	65	15,53
107 188 00*	-	114	700,6	691,36	100	30	65	23,00



Sprockets marked with * are made from grey cast iron GG25.



Reworking within 24h-service possible. Custom made parts on request.

Plate wheels KRL, ISO 12 B-1

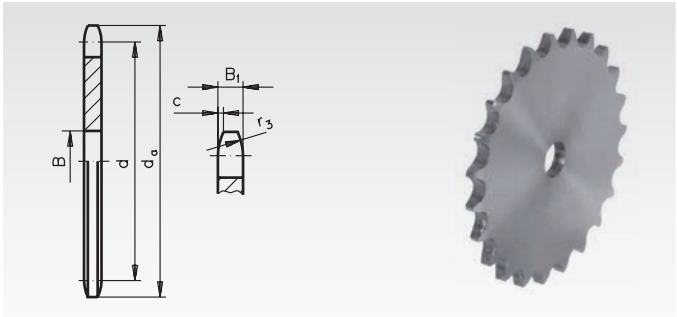

Material: Low-carbon steel, not hardable.
Pre-bored.

Ordering Details: e.g.: Product No. 107 208 00, KRL, ISO 12 B-1, 8 Teeth

ISO 12 B-1, Pitch 3/4 x 7/16"
B_1 = 11.1 mm, c = 2.0 mm, r_3 = 19 mm

Product No. Type KRL	Number of teeth	d_a mm	d mm	B mm	Weight kg
107 208 00	8	57,6	49,78	12	0,12
107 209 00	9	62,0	55,70	12	0,16
107 210 00	10	69,0	61,64	12	0,20
107 211 00	11	75,0	67,61	14	0,24
107 212 00	12	81,5	73,61	14	0,29
107 213 00	13	87,5	79,59	14	0,35
107 214 00	14	93,6	85,61	14	0,40
107 215 00	15	99,8	91,63	14	0,48
107 216 00	16	105,5	97,65	14	0,55
107 217 00	17	111,5	103,67	14	0,64
107 218 00	18	118,0	109,71	14	0,70
107 219 00	19	124,2	115,75	14	0,79
107 220 00	20	129,7	121,78	14	0,89
107 221 00	21	136,0	127,82	16	0,98
107 222 00	22	141,8	133,86	16	1,07
107 223 00	23	149,0	139,90	16	1,18
107 224 00	24	153,9	145,94	16	1,32
107 225 00	25	160,0	152,00	16	1,43
107 226 00	26	165,9	158,04	16	1,54
107 227 00	27	172,3	164,09	16	1,67
107 228 00	28	178,0	170,13	16	1,76
107 229 00	29	184,1	176,19	16	1,93
107 230 00	30	190,5	182,25	16	2,10
107 232 00	32	203,3	194,35	20	2,37
107 234 00	34	214,6	206,46	20	2,49
107 235 00	35	221,0	212,52	20	2,79
107 236 00	36	226,8	218,58	20	3,03
107 238 00	38	239,0	230,69	20	3,39
107 240 00	40	251,3	242,81	20	3,72
107 242 00	42	264,5	254,93	25	4,10
107 244 00	44	276,5	267,04	25	4,68
107 245 00	45	282,5	273,10	25	4,81
107 246 00	46	287,9	279,16	25	4,86
107 248 00	48	300,1	291,27	25	5,37
107 250 00	50	312,3	303,39	25	5,95
107 254 00	54	336,6	327,64	25	7,00
107 257 00	57	355,4	345,81	25	7,76
107 260 00	60	373,0	363,99	25	8,37
107 265 00	65	403,2	394,29	25	10,13
107 270 00	70	433,6	424,60	30	11,84
107 272 00	72	447,0	436,74	30	12,67
107 276 00	76	469,9	460,99	30	14,14
107 280 00	80	494,2	485,22	30	14,79
107 283 00	95	585,1	576,17	30	25,00

Sprockets made from stainless steel page 63.
Sprockets ready-to-mount page 70.
Sprockets for Taper clamping bushes page 74.

Sprockets with One-Sided Hub, ISO 16 B-1

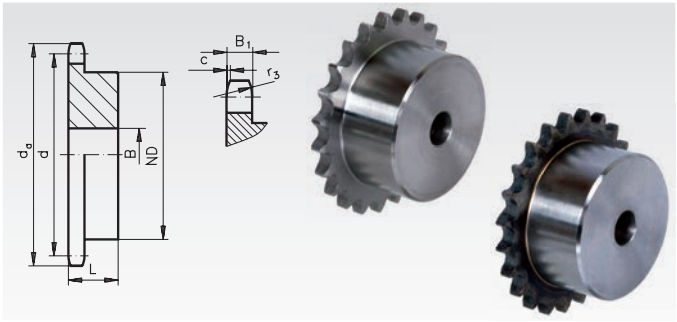

Material: Steel C45, optionally hardened.
Pre-bored.
Sprockets marked with * are made from grey cast iron GG25.

Type KRS: Not hardened. **Type KRG:** Teeth induction hardened.

Ordering Details: e.g.: Product No. 108 108 00, KRS, ISO 16 B-1, 8 Teeth

ISO 16 B-1, Pitch 1" x 17.02 mm
B_1 = 16.2 mm, c = 2.5 mm, r_3 = 26 mm

Product No. Type KRS	Product No. Type KRG	Number of teeth	d_a mm	d mm	ND mm	B mm	L mm	Weight kg
108 108 00	108 881 08	8	77,0	66,37	42	16	35	0,50
108 109 00	108 881 09	9	85,0	74,26	50	16	35	0,69
108 110 00	108 881 10	10	93,0	82,19	55	16	35	0,87
108 111 00	108 881 11	11	99,5	90,14	61	16	40	1,18
108 112 00	108 881 12	12	109,0	98,14	69	16	40	1,46
108 113 00	108 881 13	13	117,0	106,12	78	16	40	1,81
108 114 00	108 881 14	14	125,0	114,15	84	16	40	2,10
108 115 00	108 881 15	15	133,0	122,17	92	16	40	2,49
108 116 00	108 881 16	16	141,0	130,20	100	20	45	3,19
108 117 00	108 881 17	17	149,0	138,22	100	20	45	3,36
108 118 00	108 881 18	18	157,0	146,28	100	20	45	3,61
108 119 00	108 881 19	19	165,2	154,33	100	20	45	3,82
108 120 00	108 881 20	20	173,2	162,38	100	20	45	4,07
108 121 00	108 881 21	21	181,2	170,43	110	20	50	5,03
108 122 00	108 881 22	22	189,3	178,48	110	20	50	5,36
108 123 00	108 881 23	23	197,5	186,53	110	20	50	5,59
108 124 00	108 881 24	24	205,5	194,59	110	20	50	5,92
108 125 00	108 881 25	25	213,5	202,66	110	20	50	6,21
108 126 00	108 881 26	26	221,6	210,72	120	20	50	7,02
108 127 00	108 881 27	27	229,6	218,79	120	20	50	7,27
108 128 00	108 881 28	28	237,7	226,85	120	20	50	7,68
108 130 00	108 881 30	30	254,0	243,00	120	20	50	8,42
108 132 00	108 881 32	32	270,0	259,13	120	25	50	9,25
108 134 00	108 881 34	34	287,0	275,28	120	25	50	9,93
108 135 00	108 881 35	35	296,2	283,36	120	25	50	10,47
108 136 00	108 881 36	36	304,6	291,44	120	25	50	10,95
108 138 00	108 881 38	38	320,7	307,59	120	25	50	11,71
-	108 881 40	40	336,9	323,74	120	25	50	14,05
108 145 00*	-	45	377,0	364,13	125	30	70	10,91
108 157 00*	-	57	474,0	461,08	125	35	70	13,79
108 176 00*	-	76	627,0	614,65	140	35	80	26,50
108 183 00*	-	95	781,0	768,22	140	40	80	35,00
108 188 00*	-	114	933,0	921,81	140	40	80	43,50



Sprockets marked with * are made from grey cast iron GG25.

Sprockets made from stainless steel page 63.
Sprockets ready-to-mount page 72.
Sprockets for Taper clamping bushes page 75.

Plate wheels KRL, ISO 16 B-1

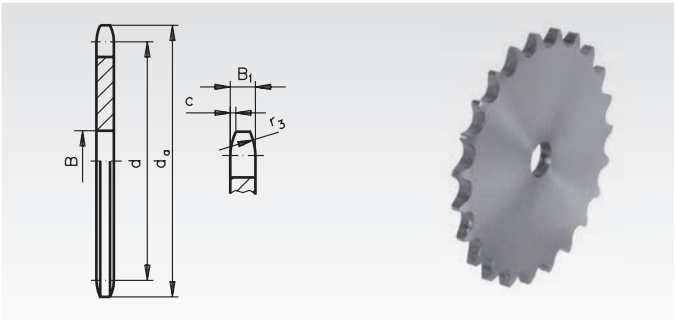

Material: Low-carbon steel, not hardable.
Pre-bored.

Ordering Details: e.g.: Product No. 108 208 00, KRL, ISO 16 B-1, 8 Teeth

ISO 16 B-1, Pitch 1" x 17.02 mm
B_1 = 16.2 mm, c = 2.5 mm, r_3 = 26 mm

Product No. Type KRL	Number of teeth	d_a mm	d mm	B mm	Weight kg
108 208 00	8	77,0	66,37	16	0,31
108 209 00	9	85,0	74,26	16	0,38
108 210 00	10	93,0	82,19	16	0,53
108 211 00	11	99,5	90,14	16	0,62
108 212 00	12	109,0	98,14	16	0,78
108 213 00	13	117,0	106,12	16	0,94
108 214 00	14	125,0	114,15	16	1,09
108 215 00	15	133,0	122,17	16	1,26
108 216 00	16	141,0	130,20	20	1,41
108 217 00	17	149,0	138,22	20	1,62
108 218 00	18	157,0	146,28	20	1,85
108 219 00	19	165,2	154,33	20	2,04
108 220 00	20	173,2	162,38	20	2,30
108 221 00	21	181,2	170,43	20	2,59
108 222 00	22	189,3	178,48	20	2,84
108 223 00	23	197,5	186,53	20	3,12
108 224 00	24	205,5	194,59	20	3,37
108 225 00	25	213,5	202,66	20	3,92
108 226 00	26	221,6	210,72	20	4,13
108 227 00	27	229,6	218,79	20	4,34
108 228 00	28	237,7	226,85	20	4,67
108 230 00	30	254,0	243,00	20	5,43
108 232 00	32	270,0	259,13	25	6,35
108 234 00	34	287,0	275,28	25	6,97
108 235 00	35	296,2	283,36	25	7,39
108 236 00	36	304,6	291,44	25	7,75
108 238 00	38	320,7	307,59	25	8,68
108 240 00	40	336,9	323,74	25	9,88
108 242 00	42	353,0	339,89	25	10,92
108 244 00	44	369,1	356,06	25	12,00
108 245 00	45	377,1	364,13	25	12,40
108 248 00	48	401,3	388,36	25	14,00
108 250 00	50	417,4	404,52	25	15,60
108 254 00	54	448,3	436,85	30	18,00
108 257 00	57	474,0	461,07	30	20,00
108 260 00	60	498,3	485,32	30	22,00
108 270 00	70	579,2	566,14	30	31,00
108 276 00	76	627,0	614,65	30	35,00
108 280 00	80	660,0	646,96	30	40,50
108 283 00	95	781,1	768,22	30	56,00
108 288 00	114	934,3	921,81	30	80,00



Reworking within 24h-service possible. Custom made parts on request.

Sprockets KRS with One-Sided Hub, ISO 20 B-1

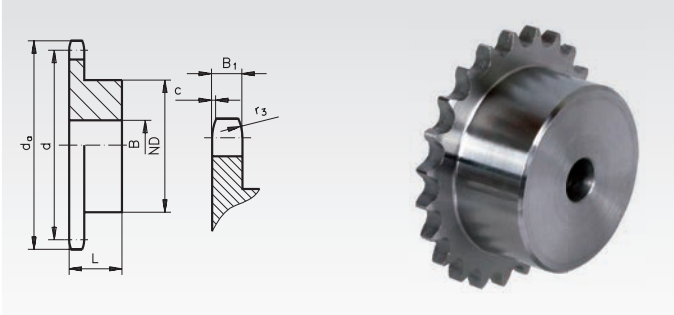

Material: Steel C45, not hardened.
Pre-bored.
Sprockets marked with * are made from grey cast iron GG25.
Sprockets marked with 1) made from St52 with welded in hub.

Ordering Details: e.g.: Product No. 109 108 00, KRS, ISO 20 B-1, 8 Teeth

ISO 20 B-1, Pitch 1 1/4 x 3/4",
B_1 = 18.5 mm, c = 3.5 mm, r_3 = 32 mm

Product No.	Number of teeth	d_a mm	d mm	ND mm	B mm	L mm	Weight kg
109 108 00	8	98,1	82,96	53	20	40	0,90
109 109 00	9	108,0	92,84	63	20	40	1,30
109 110 00	10	117,9	102,74	70	20	40	1,60
109 111 00	11	127,8	112,68	77	20	45	2,10
109 112 00	12	137,8	122,68	88	20	45	2,70
109 113 00	13	147,8	132,65	98	20	45	3,30
109 114 00	14	157,8	142,68	108	20	45	3,90
109 115 00	15	167,9	152,72	118	20	45	4,60
109 116 00	16	177,9	162,75	120	25	50	5,35
109 117 00	17	187,9	172,78	120	25	50	5,75
109 118 00	18	198,0	182,85	120	25	50	6,10
109 119 00	19	208,1	192,91	120	25	50	6,60
109 120 00	20	218,1	202,98	120	25	50	7,00
109 121 00	21	228,2	213,04	140	25	55	9,10
109 123 00	23	248,3	233,17	140	25	55	10,00
109 125 00	25	268,5	253,33	140	25	55	11,00
109 127 00	27	288,6	273,49	150	30	55	13,00
109 130 00	30	318,9	303,75	150	30	55	15,45
109 135 00	35[1)]	369,4	354,20	150	30	55	19,50
109 138 00*	38	399,6	384,49	125	35	70	11,90
109 145 00*	45	470,3	455,17	125	35	70	13,80
109 157 00*	57	591,5	576,36	135	40	80	24,00
109 176 00*	76	783,5	768,32	140	50	90	37,50

Plate wheels KRL, ISO 20 B-1

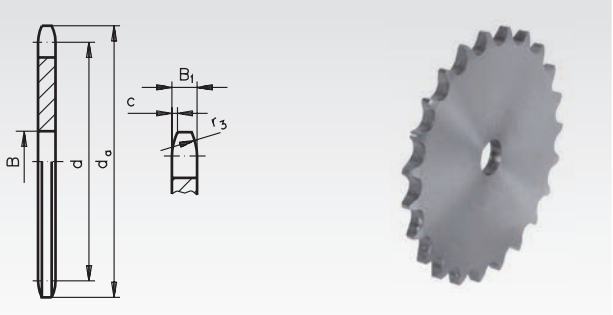

Material: Low-carbon steel, not hardable.
Pre-bored.

Ordering Details: e.g.: Product No. 109 208 00, KRL, ISO 20 B-1, 8 Teeth

ISO 20 B-1, Pitch 1 1/4 x 3/4",
B_1 = 18.5 mm, c = 3.5 mm, r_3 = 32 mm

Product No.	Number of teeth	d_a mm	d mm	B mm	Weight kg
109 208 00	8	98,1	82,96	16	0,65
109 209 00	9	108,0	92,84	16	0,80
109 210 00	10	117,9	102,74	16	1,00
109 211 00	11	127,8	112,68	20	1,20
109 212 00	12	137,8	122,68	20	1,45
109 213 00	13	147,8	132,65	20	1,70
109 214 00	14	157,8	142,68	20	2,00
109 215 00	15	167,9	152,72	20	2,40
109 216 00	16	177,9	162,75	20	2,60
109 217 00	17	187,9	172,78	20	3,00
109 218 00	18	198,0	182,85	20	3,30
109 219 00	19	208,1	192,91	20	3,75
109 220 00	20	218,1	202,98	20	4,20
109 221 00	21	228,2	213,04	25	4,60
109 222 00	22	238,3	223,11	25	5,00
109 223 00	23	248,3	233,17	25	5,55
109 224 00	24	258,4	243,23	25	6,25
109 225 00	25	268,5	253,33	25	6,60
109 227 00	27	288,6	273,40	30	7,80
109 230 00	30	318,9	303,75	30	9,80
109 235 00	35	369,4	354,20	30	13,40
109 238 00	38	399,6	384,49	30	15,80
109 240 00	40	419,8	404,68	30	18,00
109 245 00	45	470,3	455,17	30	22,50
109 248 00	48	500,6	485,46	30	26,00
109 254 00	54	561,2	546,07	30	32,00
109 257 00	57	591,5	576,36	30	35,00



Sprockets marked with * are made from grey cast iron GG25.



Reworking within 24h-service possible. Custom made parts on request.

Sprockets KRS with One-Sided Hub, ISO 24 B-1

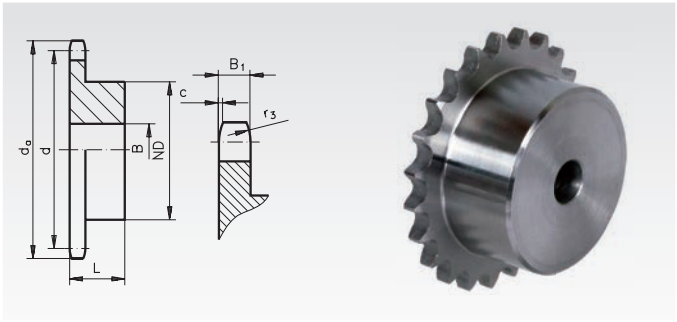

Material: Steel C45, not hardened.
Pre-bored.
Sprockets marked with * are made from grey cast iron GG25.
Sprockets marked with 1) with welded in hub.

Ordering Details: e.g.: Product No. 110 110 00, KRS, ISO 24 B-1, 10 Teeth

ISO 24 B-1, Pitch 1 1/2 x 1“, B_1 = 24.1 mm, c = 4.0 mm, r_3 = 38 mm

Product No.	Number of teeth	d_a mm	d mm	ND mm	B mm	L mm	Weight kg
110 110 00	10	138,0	123,29	80	20	45	2,55
110 111 00	11	150,0	135,21	90	25	50	3,40
110 112 00	12	162,0	147,22	102	25	50	4,20
110 113 00	13	174,2	159,18	114	25	50	5,20
110 114 00	14	186,2	171,22	128	25	50	6,20
110 115 00	15	198,2	183,26	132	25	50	7,30
110 116 00	16	210,3	195,30	136	25	55	8,90
110 117 00	17	222,3	207,34	136	25	55	9,50
110 118 00	18	234,3	219,42	136	25	55	10,30
110 119 00	19	246,5	231,49	136	25	55	10,90
110 120 00	20	258,6	243,57	136	25	55	11,80
110 121 00	21	270,6	255,65	150	30	60	13,70
110 123 00	23	294,8	279,80	150	30	60	15,40
110 125 00	25	319,0	304,00	150	30	60	17,50
110 128 00	28[1)]	355,2	340,27	150	30	60	21,50
110 130 00	30[1)]	379,5	364,50	150	30	60	24,00
110 138 00	38[1)]	476,2	461,39	150	30	60	35,00
110 145 00*	45	561,2	546,20	140	45	90	26,50
110 157 00*	57	706,5	691,63	160	45	100	39,50

Plate wheels KRL, ISO 24 B-1

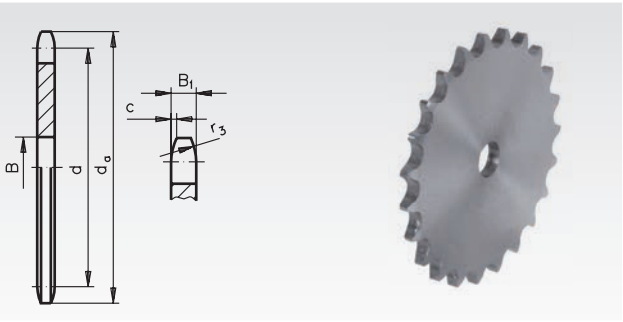

Material: Low-carbon steel, not hardable.
Pre-bored.

Ordering Details: e.g.: Product No. 110 210 00, KRL, ISO 24 B-1, 10 Teeth

ISO 24 B-1, Pitch 1 1/2 x 1“, B_1 = 24.1 mm, c = 4.0 mm, r_3 = 38 mm

Product No.	Number of teeth	d_a mm	d mm	B mm	Weight kg
110 210 00	10	138,0	123,29	20	1,80
110 211 00	11	150,0	135,21	25	2,20
110 212 00	12	162,0	147,22	25	2,60
110 213 00	13	174,2	159,18	25	3,10
110 214 00	14	186,2	171,22	25	3,60
110 215 00	15	198,2	183,26	25	4,30
110 216 00	16	210,3	195,30	25	4,90
110 218 00	18	234,3	219,42	25	6,30
110 220 00	20	258,6	243,57	25	7,80
110 222 00	22	282,7	267,73	30	9,50
110 224 00	24	306,8	291,88	30	11,30
110 228 00	28	355,2	340,27	30	15,60
110 230 00	30	379,5	364,50	30	18,00
110 235 00	35	440,0	425,04	30	26,00
110 238 00	38	476,2	461,39	30	30,80
110 245 00	45	561,2	546,20	30	42,00
110 248 00	48	597,4	582,55	30	48,00
110 254 00	54	670,2	655,28	30	60,50
110 257 00	57	706,5	691,63	30	66,80



Sprockets marked with * are made from grey cast iron GG25.



Reworking within 24h-service possible. Custom made parts on request.

Double-Sprockets ZRE and ZREG for two Single-Strand Roller Chains DIN ISO 606 (ex DIN 8187)

Material: Steel C45, optionally hardened.

Type ZRE: Not hardened.
Type ZREG: Teeth induction hardened (approx. HRC 50).

Double-Sprockets for transmitting the power from a driving chain to a parallel running driven chain, e.g. at roller conveyors.

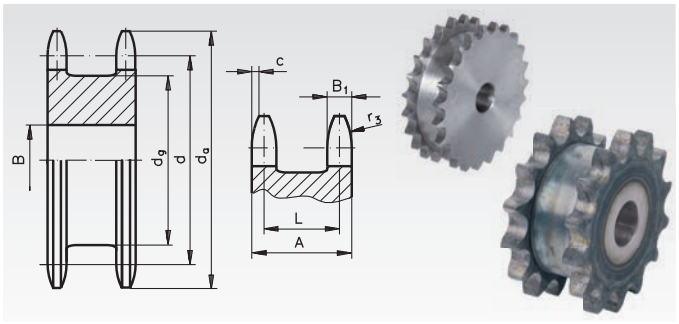

Ordering Details: e.g.: Product No. 121 413 00, Double Sprocket ZRE, 2x ISO 06B-1, 13 Teeth

2 x ISO 06 B-1, Pitch 3/8 x 7/32", B_1 = max. 5.3 mm, B_2 = 15.4, c = 1.0 mm, r_3 = 10 mm

Product No. ZRE	Product No. ZREG	Number of teeth	d_a mm	d mm	B mm	d_g mm	A mm	L mm	Weight kg
121 413 00	121 884 13	13	43,0	39,79	10	29	23	17,8	0,14
121 414 00	121 884 14	14	46,3	42,80	10	32	23	17,8	0,17
121 415 00	121 884 15	15	49,3	45,81	10	35	23	17,8	0,20
121 416 00	121 884 16	16	52,3	48,82	12	38	23	17,8	0,23
121 417 00	121 884 17	17	55,3	51,83	12	41	23	17,8	0,26
121 418 00	121 884 18	18	58,3	54,85	12	44	23	17,8	0,30
121 419 00	121 884 19	19	61,3	57,87	12	47	23	17,8	0,34
121 420 00	121 884 20	20	64,3	60,89	15	50	23	17,8	0,38
121 421 00	121 884 21	21	68,0	63,91	15	53	23	17,8	0,43
121 423 00	121 884 23	23	73,5	69,95	15	60	23	17,8	0,54
121 425 00	121 884 25	25	80,0	76,00	15	66	23	17,8	0,65

2 x ISO 08 B-1, Pitch 1/2 x 5/16", B_1 = max. 7.2 mm, B_2 = 21, c = 1.3 mm, r_3 = 13 mm

Product No. ZRE	Product No. ZREG	Number of teeth	d_a mm	d mm	B mm	d_g mm	A mm	L mm	Weight kg
125 412 00	125 884 12	12	53,0	49,07	15	36	30	23	0,27
125 413 00	125 884 13	13	57,4	53,07	15	40	30	23	0,33
125 414 00	125 884 14	14	61,8	57,07	15	44	30	23	0,40
125 415 00	125 884 15	15	65,5	61,09	15	48	30	23	0,47
125 416 00	125 884 16	16	69,5	65,10	15	52	30	23	0,55
125 417 00	125 884 17	17	73,6	69,11	15	56	30	23	0,64
125 418 00	125 884 18	18	77,8	73,14	15	60	30	23	0,73
125 419 00	125 884 19	19	81,7	77,16	15	64	30	23	0,84
125 420 00	125 884 20	20	85,8	81,19	15	68	30	23	0,93
125 421 00	125 884 21	21	89,7	85,22	15	72	30	23	1,03
125 423 00	125 884 23	23	88,2	93,27	15	80	30	23	1,28
125 425 00	125 884 25	25	105,8	101,33	15	88	30	23	1,54

2 x ISO 10 B-1, Pitch 5/8 x 3/8", B_1 = max. 9.1 mm, B_2 = 25.5, c = 1.6 mm, r_3 = 16 mm

Product No. ZRE	Product No. ZREG	Number of teeth	d_a mm	d mm	B mm	d_g mm	A mm	L mm	Weight kg
126 412 00	126 884 12	12	68,0	61,34	15	45	34	25,2	0,51
126 413 00	126 884 13	13	73,0	66,32	15	50	34	25,2	0,62
126 414 00	126 884 14	14	78,0	71,34	15	55	34	25,2	0,74
126 415 00	126 884 15	15	83,0	76,36	15	60	34	25,2	0,87
126 416 00	126 884 16	16	88,0	81,37	15	65	34	25,2	1,02
126 417 00	126 884 17	17	93,0	86,39	15	70	34	25,2	1,17
126 418 00	126 884 18	18	98,3	91,42	15	75	34	25,2	1,34
126 419 00	126 884 19	19	103,3	96,45	20	80	34	25,2	1,49
126 420 00	126 884 20	20	108,4	101,49	20	85	34	25,2	1,68
126 421 00	126 884 21	21	113,4	106,52	20	90	34	25,2	1,88
126 423 00	126 884 23	23	123,4	116,58	20	100	34	25,2	2,30
126 425 00	126 884 25	25	134,0	126,66	20	110	34	25,2	2,77

2 x ISO 12 B-1, Pitch 3/4 x 7/16", B_1 = max. 11.1 mm, B_2 = 30.3, c = 2.0 mm, r_3 = 19 mm

Product No. ZRE	Product No. ZREG	Number of teeth	d_a mm	d mm	B mm	d_g mm	A mm	L mm	Weight kg
127 412 00	127 884 12	12	81,5	73,6	20	56	44	33,4	0,91
127 413 00	127 884 13	13	87,5	79,6	20	59	44	33,4	1,12
127 414 00	127 884 14	14	93,6	85,6	20	65	44	33,4	1,33
127 415 00	127 884 15	15	99,8	91,6	20	71	44	33,4	1,57
127 416 00	127 884 16	16	105,5	97,7	20	77	44	33,4	1,84
127 417 00	127 884 17	17	111,5	103,7	20	83	44	33,4	2,12
127 418 00	127 884 18	18	118,0	109,7	20	89	44	33,4	2,42
127 419 00	127 884 19	19	124,2	115,8	20	95	44	33,4	2,75
127 420 00	127 884 20	20	129,7	121,8	20	101	44	33,4	3,09
127 421 00	127 884 21	21	136,0	127,8	25	107	44	33,4	3,42
127 423 00	127 884 23	23	149,0	139,9	25	119	44	33,4	4,21
127 425 00	127 884 25	25	160,0	152,0	25	131	44	33,4	5,07

2 x ISO 16 B-1, Pitch 1" x 17.02 mm, B_1 = max. 16.2 mm, B_2 = 47.7, c = 2.5 mm, r_3 = 26 mm

Product No. ZRE	Product No. ZREG	Number of teeth	d_a mm	d mm	B mm	d_g mm	A mm	L mm	Weight kg
128 412 00	128 884 12	12	109,0	98,14	20	72	68	52,5	2,58
128 413 00	128 884 13	13	117,0	106,12	20	80	68	52,5	3,14
128 414 00	128 884 14	14	125,0	114,15	20	88	68	52,5	3,76
128 415 00	128 884 15	15	133,0	122,17	20	96	68	52,5	4,44
128 416 00	128 884 16	16	141,0	130,20	25	104	68	52,5	5,09
128 417 00	128 884 17	17	149,0	138,22	25	112	68	52,5	5,87
128 418 00	128 884 18	18	157,0	146,28	25	120	68	52,5	6,70
128 419 00	128 884 19	19	165,2	154,33	30	128	68	52,5	7,53
128 421 00	128 884 21	21	181,2	170,43	30	144	68	52,5	9,48

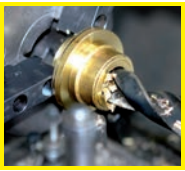

Reworking within 24h-service possible. Custom made parts on request.

Double Sprockets ZRT for Taper Bushes

Material: Steel C45, not hardened or grey cast iron.

Sprockets for taper bushes, for easy and fast mounting.
The taper bush has to be ordered separately, see page 76.

Product numbers ending with G are made from grey cast iron GG25.

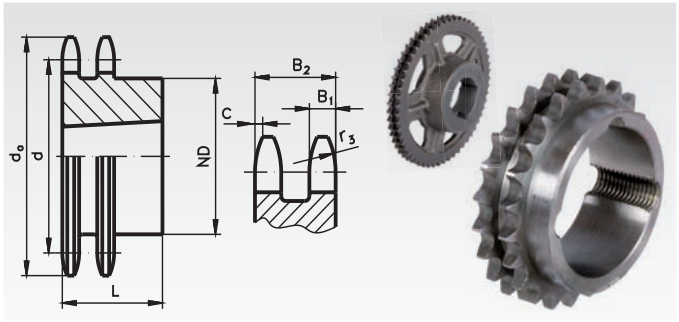

Ordering Details: e.g.: Product No. 121 771 17, ZRT, ISO 06 B-2, 17 Teeth, Dimension bore with Reference to Taper Bush Type, see page 76.

ISO 06 B-2, Pitch 3/8 x 7/32", B_1 = 5.3 mm, B_2 = 15.4 mm, c = 1.0 mm, r_3 = 10 mm

Product No. ZRT	Number of teeth	d_a mm	d mm	ND mm	L mm	Weight kg	Taper bush
121 771 17	17	55,3	51,83	42	22	0,11	1008
121 771 18	18	58,3	54,85	43	22	0,15	1008
121 771 19	19	61,3	57,87	46	22	0,18	1008
121 771 20	20	64,3	60,89	48	22	0,22	1008
121 771 21	21	68,0	63,91	49	22	0,16	1008
121 771 22	22	71,0	66,93	52	22	0,28	1108
121 771 23	23	73,5	69,95	59	25	0,27	1210
121 771 24	24	77,0	72,97	61	25	0,32	1210
121 771 25	25	80,0	76,00	64	25	0,37	1210
121 771 26	26	83,0	79,02	65	25	0,44	1210
121 771 27	27	86,0	82,05	70	25	0,50	1210
121 771 28	28	89,0	85,07	70	25	0,57	1210
121 771 30	30	94,7	91,12	75	25	0,68	1210
121 771 38	38	119,5	115,35	80	25	1,03	1610
121 771 45	45	140,7	136,55	80	25	1,50	1610
121 771 57G	57	176,9	172,91	90	25	1,80	1610
121 771 76G	76	234,9	230,49	90	25	2,42	1610
121 771 83G	95	292,5	288,08	90	25	3,00	1610
121 771 88G	114	349,5	345,68	90	38	6,00	1615

ISO 08 B-2, Pitch 1/2 x 5/16", B_1 = 7.2 mm, B_2 = 21 mm, c = 1.3 mm, r_3 = 13 mm

Product No. ZRT	Number of teeth	d_a mm	d mm	ND mm	L mm	Weight kg	Taper bush
125 771 15	15	65,0	61,09	46	22	0,22	1008
125 771 16	16	69,5	65,10	50	22	0,22	1108
125 771 17	17	73,6	69,11	56	25	0,23	1210
125 771 18	18	77,8	73,14	60	25	0,30	1210
125 771 19	19	81,7	77,16	62	25	0,38	1210
125 771 20	20	85,8	81,19	66	25	0,45	1610
125 771 21	21	89,7	85,22	70	25	0,50	1610
125 771 22	22	93,8	89,24	76	25	0,55	1610
125 771 23	23	98,2	93,27	79	25	0,62	1610
125 771 24	24	101,8	97,29	84	25	0,68	1610
125 771 25	25	105,8	101,33	87	32	0,72	2012
125 771 26	26	110,0	105,36	87	32	0,82	2012
125 771 27	27	114,0	109,40	87	32	0,92	2012
125 771 28	28	118,0	113,42	87	32	1,10	2012
125 771 30	30	126,1	121,50	87	32	1,24	2012
125 771 38	38	158,6	153,80	100	32	2,50	2012
125 771 45	45	188,0	182,07	111	32	3,81	2012
125 771 45G	45	188,0	182,07	100	32	2,30	2012
125 771 57G	57	236,4	230,54	111	32	3,64	2012
125 771 76G	76	313,3	307,33	111	32	5,50	2012
125 771 83G	95	390,1	384,11	111	32	6,80	2012
125 771 88	114	466,9	460,90	110	45	26,30	2517
125 771 88G	114	466,9	460,90	124	45	13,30	2517

ISO 10 B-2, Pitch 5/8 x 3/8", B_1 = 9.1 mm, B_2 = 25.5 mm, c = 1.6 mm, r_3 = 16 mm

Product No. ZRT	Number of teeth	d_a mm	d mm	ND mm	L mm	Weight kg	Taper bush
126 771 15	15	83,0	76,36	-	25,5	0,38	1210
126 771 16	16	88,0	81,37	-	25,5	0,42	1610
126 771 17	17	93,0	86,39	-	25,5	0,47	1610
126 771 18	18	98,3	91,42	-	25,5	0,60	1610
126 771 19	19	103,3	96,45	-	25,5	0,72	1610
126 771 20	20	108,4	101,49	-	25,5	0,87	1610
126 771 21	21	113,4	106,52	-	25,5	1,01	1610
126 771 22	22	118,0	111,55	-	25,5	1,18	1610
126 771 23	23	123,4	116,58	-	25,5	1,35	1610
126 771 24	24	128,3	121,62	90	32	1,45	2012
126 771 25	25	134,0	126,66	90	32	1,55	2012
126 771 27	27	144,0	136,75	90	32	1,98	2012
126 771 28	28	148,7	141,78	90	32	2,30	2012
126 771 30	30	158,8	151,87	90	32	2,63	2012
126 771 38	38	199,2	192,24	108	45	4,80	2517
126 771 45G	45	235,0	227,58	110	45	3,61	2517
126 771 57G	57	296,0	288,18	124	45	5,30	2517
126 771 76G	76	392,1	384,16	160	51	9,80	3020
126 771 83G	95	488,5	480,14	160	51	14,0	3020

ISO 12 B-2, Pitch 3/4 x 7/16", B_1 = 11.1 mm, B_2 = 30.3 mm, c = 2.0 mm, r_3 = 19 mm

Product No. ZRT	Number of teeth	d_a mm	d mm	ND mm	L mm	Weight kg	Taper bush
127 771 14	14	93,6	85,61	-	30,3	0,51	1610
127 771 15	15	99,8	91,63	-	30,3	0,68	1610
127 771 16	16	105,5	97,65	-	30,3	0,89	1610
127 771 17	17	111,5	103,67	-	30,3	1,14	1610
127 771 18	18	118,0	109,71	90	32	1,18	2012
127 771 19	19	124,2	115,75	90	32	1,24	2012
127 771 20	20	129,7	121,78	108	45	1,40	2517
127 771 21	21	136,0	127,82	108	45	1,68	2517
127 771 22	22	141,8	133,86	108	45	1,99	2517
127 771 23	23	149,0	139,90	108	45	2,24	2517
127 771 24	24	153,9	145,94	108	45	2,54	2517
127 771 25	25	160,0	152,00	108	45	2,87	2517
127 771 26	26	165,9	158,04	108	45	3,17	2517
127 771 27	27	172,3	164,09	108	45	3,55	2517
127 771 28	28	178,0	170,13	108	45	4,10	2517
127 771 30	30	190,5	182,24	108	45	4,62	2517
127 771 38	38	239,0	230,69	140	51	8,11	3020
127 771 45	45	282,5	273,10	140	51	11,9	3020
127 771 45G	45	282,5	273,10	154	51	7,0	3020
127 771 57	57	354,0	345,81	140	51	20,0	3020
127 771 57G	57	354,0	345,81	160	51	10,3	3020
127 771 76G	76	469,9	460,99	160	51	15,0	3020
127 771 83G	95	585,1	576,17	160	51	18,6	3020
127 771 88G	114	700,6	691,36	160	76	30,6	3030

Double Sprockets ZRT for Taper Bushes

Material: Steel C45, not hardened or grey cast iron.

Sprockets for taper bushes, for easy and fast mounting.
The taper bush has to be ordered separately, see page 76.

Product numbers ending with G are made from grey cast iron GG25.

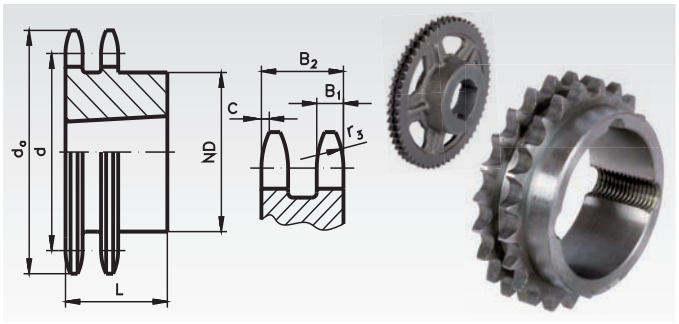

Ordering Details: e.g.: Product No. 128 771 13, ZRT, ISO 16 B-2, 13 Teeth, Dimension bore with Reference to Taper Bush Type, see page 76.

ISO 16 B-2, Pitch 1" x 17.02 mm, B_1 = 16.2 mm, B_2 = 47.7 mm, c = 2.5 mm, r_3 = 26 mm

Product No. ZRT	Number of teeth	d_a mm	d mm	ND mm	L mm	Weight kg	Taper bush
128 771 13	13	117,0	106,21	-	47,7	1,70	1610
128 771 14	14	125,0	114,15	-	47,7	1,90	1610
128 771 15	15	133,0	122,17	-	47,7	2,11	2012
128 771 16	16	141,0	130,20	-	47,7	2,25	2517
128 771 17	17	149,0	138,22	-	47,7	2,53	2517
128 771 18	18	157,0	146,28	-	47,7	3,10	2517
128 771 19	19	165,2	154,33	-	47,7	3,80	2517
128 771 20	20	173,2	162,38	-	47,7	4,10	2517
128 771 21	21	181,2	170,43	140	51	4,15	3020
128 771 22	22	189,3	178,48	150	51	4,90	3020
128 771 23	23	197,5	186,53	140	51	5,69	3020
128 771 24	24	205,5	194,59	166	51	6,00	3020
128 771 25	25	213,5	202,66	140	51	6,38	3020
128 771 26	26	221,6	210,72	175	51	7,80	3020
128 771 27	27	229,6	218,79	175	51	9,27	3020
128 771 28	28	237,7	226,85	175	51	11,4	3020
128 771 30	30	254,0	243,00	140	51	13,5	3020
128 771 38	38	320,7	307,59	140	51	16,0	3020
128 771 38G	38	320,7	307,59	160	76	14,9	3030
128 771 45	45	377,1	364,13	140	51	30,0	3020
128 771 45G	45	377,1	364,13	160	76	17,5	3030
128 771 57	57	474,0	461,08	175	65	45,0	3525
128 771 57G	57	474,0	461,08	175	89	25,6	3535
128 771 76	76	627,0	614,65	175	65	110,0	3525
128 771 76G	76	627,0	614,65	175	89	32,0	3535
128 771 83G	95	781,1	768,22	215	102	55,0	4040
128 771 88G	114	943,3	921,81	215	102	88,0	4040

ISO 20 B-2, Pitch 1 1/4" x 3/4", B_1 = 18.5 mm, B_2 = 54.6 mm, c = 3.5 mm, r_3 = 32 mm

Product No. ZRT	Number of teeth	d_a mm	d mm	ND mm	L mm	Weight kg	Taper bush
129 771 38G	38	399,6	384,49	160	76	22	3030
129 771 57G	57	591,5	576,36	175	89	37	3535
129 771 76G	76	783,5	768,32	175	89	46	3535



Product numbers ending with G are made from grey cast iron GG25.

Taper bushes page 76

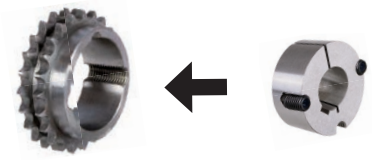

ISO 24 B-2, Pitch 1 1/2" x 1", B_1 = 24.1 mm, B_2 = 72 mm, c = 4 mm, r_3 = 38 mm

Product No. ZRT	Number of teeth	d_a mm	d mm	ND mm	L mm	Weight kg	Taper bush
129 775 38G	38	476,2	461,39	175	89	44	3535
129 775 45G	45	561,2	546,20	175	89	55	3535
129 775 57G	57	706,5	691,63	175	89	63	3535
129 775 76G	76	936,9	921,98	240	102	107	4040

Description and mounting instructions page 824

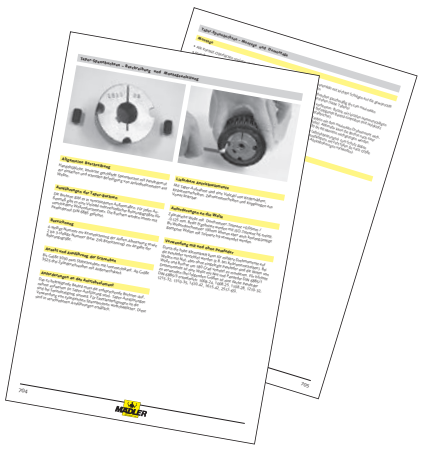

Double-Strand Sprockets ZRS with Hub, ISO 05 B-2

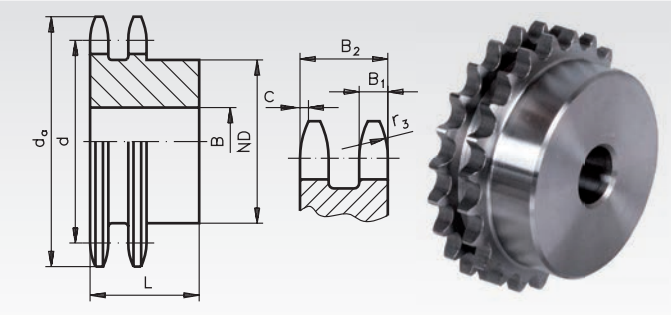

Material: Low-carbon steel, not hardable.
Pre-bored.

Ordering Details: e.g.: Product No. 120 108 00, ZRS, ISO 05 B-2, 8 Teeth

ISO 05 B-2, Pitch 8 mm,
B_1 = 2.7 mm, B_2 = 8.3 mm, c = 1.0 mm, r_3 = 8 mm

Product No.	Number of teeth	d_a mm	d mm	ND mm	B mm	L mm	Weight g
120 108 00	8	24,0	20,90	12	8	18	18
120 109 00	9	26,6	23,39	15	8	18	25
120 110 00	10	29,2	25,89	17	8	18	31
120 111 00	11	31,7	28,39	19	10	18	40
120 112 00	12	34,2	30,91	21	10	18	51
120 113 00	13	36,7	33,42	24	10	18	67
120 114 00	14	39,2	35,95	26	10	18	82
120 115 00	15	41,7	38,48	29	10	18	97
120 116 00	16	44,3	41,01	32	10	20	128
120 117 00	17	46,8	43,53	34	10	20	147
120 118 00	18	49,3	46,07	37	10	20	173
120 119 00	19	51,9	48,61	39	10	20	196
120 120 00	20	54,4	51,14	40	10	20	207
120 121 00	21	57,0	53,68	40	10	20	222
120 122 00	22	59,5	56,21	40	10	20	238
120 123 00	23	62,0	58,75	40	10	20	250
120 124 00	24	64,6	61,29	40	10	20	267
120 125 00	25	67,5	63,83	40	10	20	284
120 126 00	26	69,5	66,37	50	12	22	383
120 127 00	27	72,2	68,91	50	12	22	397
120 128 00	28	74,8	71,45	50	12	22	416
120 129 00	29	77,3	73,99	50	12	22	430
120 130 00	30	79,8	76,53	50	12	22	454
120 131 00	31	82,4	79,08	60	12	22	550
120 132 00	32	84,9	81,61	60	12	22	580
120 133 00	33	87,5	84,16	60	12	22	600
120 134 00	34	90,0	86,70	60	12	22	620
120 135 00	35	92,5	89,25	60	12	22	637
120 136 00	36	95,0	91,79	60	12	22	660
120 137 00	37	97,6	94,33	60	12	22	680
120 138 00	38	100,2	96,88	60	12	22	710
120 139 00	39	102,7	99,42	60	12	22	730
120 140 00	40	105,3	101,97	60	12	22	779

Double-Strand plate wheels ZRL, ISO 05 B-2

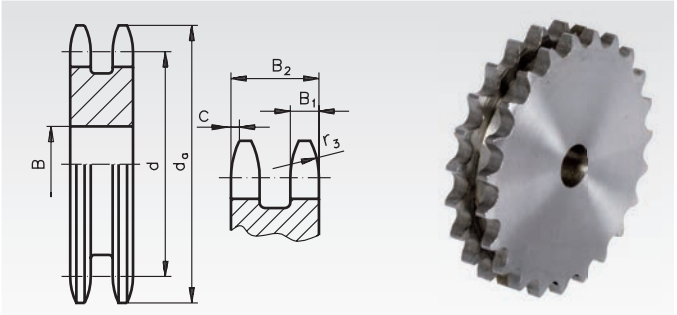

Material: Low-carbon steel, not hardable.
Pre-bored.

Ordering Details: e.g.: Product No. 120 211 00, ZRL, ISO 05 B-2, 11 Teeth

ISO 05 B-2, Pitch 8 mm,
B_1 = 2.7 mm, B_2 = 8.3 mm, c = 1.0 mm, r_3 = 8 mm

Product No.	Number of teeth	d_a mm	d mm	B mm	Weight g
120 211 00	11	31,7	28,39	8	27
120 212 00	12	34,2	30,91	8	31
120 213 00	13	36,7	33,42	8	38
120 214 00	14	39,2	35,95	8	46
120 215 00	15	41,7	38,48	8	53
120 216 00	16	44,3	41,01	10	62
120 218 00	18	49,3	46,07	10	82
120 219 00	19	51,9	48,61	10	93
120 220 00	20	54,4	51,14	10	105
120 221 00	21	57,0	53,68	10	115
120 222 00	22	59,5	56,21	10	128
120 223 00	23	62,0	58,75	10	143
120 224 00	24	64,6	61,29	10	158
120 225 00	25	67,5	63,83	10	167
120 227 00	27	72,2	68,91	12	199
120 228 00	28	74,8	71,45	12	218
120 230 00	30	79,8	76,53	12	254
120 232 00	32	84,9	81,61	12	288
120 235 00	35	92,5	89,25	12	350
120 238 00	38	100,2	96,88	12	424
120 245 00	45	118,0	114,69	14	593
120 257 00	57	148,6	145,22	16	985
120 260 00	60	156,2	152,85	16	1083
120 265 00	65	169,6	165,58	20	1308
120 270 00	70	182,4	178,31	20	1491
120 276 00	76	197,7	193,59	20	1785



Reworking within 24h-service possible. Custom made parts on request.

Double-Strand Sprockets ZRS with Hub, ISO 06 B-2

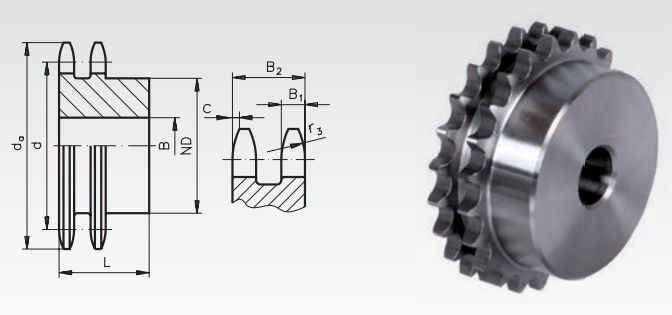

Material: Steel C45, not hardened.
Pre-bored.
Sprockets marked with * are made from grey cast iron GG25.

Ordering Details: e.g.: Product No. 121 108 00, ZRS, ISO 06 B-2, 8 Teeth

ISO 06 B-2, Pitch 3/8 x 7/32",
B_1 = 5.2 mm, B_2 = 15.4 mm c = 1.0 mm, r_3 = 10 mm

Product No.	Number of teeth	d_a mm	d mm	ND mm	B mm	L mm	Weight g
121 108 00	8	28,0	24,89	15	6	22	40
121 109 00	9	31,0	27,85	18	8	22	50
121 110 00	10	34,0	30,82	20	8	22	70
121 111 00	11	37,0	33,80	22	10	25	87
121 112 00	12	40,0	36,80	25	10	25	110
121 113 00	13	43,0	39,79	28	10	25	141
121 114 00	14	46,3	42,80	31	10	25	170
121 115 00	15	49,3	45,81	34	10	25	202
121 116 00	16	52,3	48,82	37	12	30	268
121 117 00	17	55,3	51,83	40	12	30	315
121 118 00	18	58,3	54,85	43	12	30	363
121 119 00	19	61,3	57,87	46	12	30	409
121 120 00	20	64,3	60,89	49	12	30	473
121 121 00	21	68,0	63,91	52	16	30	533
121 122 00	22	71,0	66,93	55	16	30	597
121 123 00	23	73,5	69,95	58	16	30	662
121 124 00	24	77,0	72,97	61	16	30	733
121 125 00	25	80,0	76,00	64	16	30	804
121 126 00	26	83,0	79,02	67	16	30	878
121 127 00	27	86,0	82,05	70	16	30	956
121 128 00	28	89,0	85,07	73	16	30	1038
121 130 00	30	94,7	91,12	79	16	30	1222
121 132 00	32	101,3	97,17	80	16	30	1312
121 135 00	35	110,4	106,26	80	16	30	1483
121 138 00	38	119,5	115,35	90	16	30	1807
121 140 00	40	125,5	121,40	90	16	30	1926
121 145 00*	45	140,7	136,55	80	20	40	2194
121 157 00*	57	176,9	172,91	80	20	40	2247
121 176 00*	76	234,9	230,49	80	20	40	2760

Double-Strand plate wheels ZRL, ISO 06 B-2

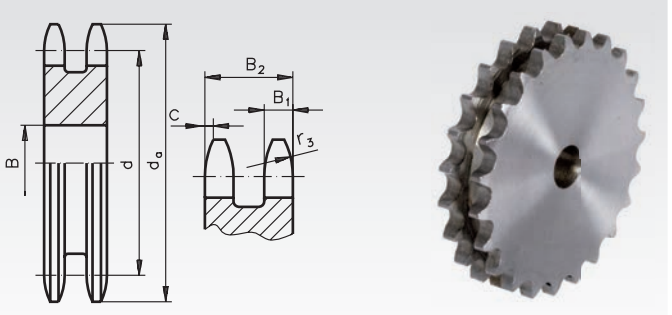

Material: Low-carbon steel, not hardable.
Pre-bored.

Ordering Details: e.g.: Product No. 121 211 00, ZRL, ISO 06 B-2, 11 Teeth

ISO 06 B-2, Pitch 3/8 x 7/32",
B_1 = 5.2 mm, B_2 = 15.4 mm c = 1.0 mm, r_3 = 10 mm

Product No.	Number of teeth	d_a mm	d mm	B mm	Weight g
121 211 00	11	37,0	33,80	10	63
121 212 00	12	40,0	36,80	10	78
121 213 00	13	43,0	39,79	10	102
121 214 00	14	46,3	42,80	10	118
121 215 00	15	49,3	45,81	10	140
121 216 00	16	52,3	48,82	12	158
121 217 00	17	55,3	51,83	12	187
121 218 00	18	58,3	54,85	12	216
121 219 00	19	61,3	57,87	12	238
121 220 00	20	64,3	60,89	12	273
121 221 00	21	68,0	63,91	12	303
121 223 00	23	73,5	69,95	12	370
121 224 00	24	77,0	72,97	12	408
121 225 00	25	80,0	76,02	12	451
121 226 00	26	83,0	79,02	16	495
121 227 00	27	86,0	82,05	16	514
121 228 00	28	89,0	85,07	16	567
121 230 00	30	94,7	91,12	16	659
121 232 00	32	101,3	97,17	16	773
121 235 00	35	110,4	106,26	16	930
121 238 00	38	119,5	115,35	16	1122
121 240 00	40	125,5	121,40	16	1227
121 245 00	45	140,7	136,55	20	1600
121 248 00	48	149,7	145,64	20	1810
121 254 00	54	167,8	163,82	20	2278
121 257 00	57	176,9	172,91	20	2600
121 276 00	76	234,9	230,49	25	4744
121 283 00	95	292,5	288,08	25	7479
121 288 00	114	349,5	345,68	25	10787



Sprockets marked with * are made from grey cast iron GG25.



Reworking within 24h-service possible. Custom made parts on request.

Double-Strand Sprockets ZRS with Hub, ISO 08 B-2

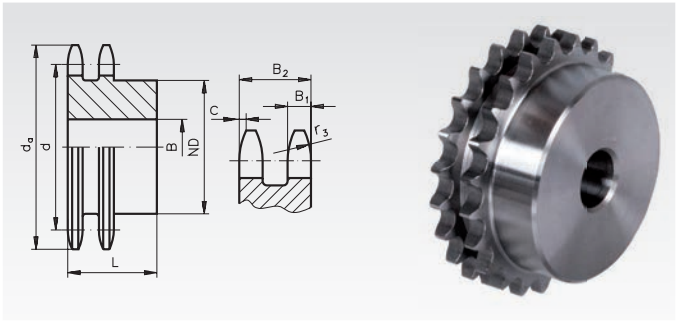

Material: Steel C45, not hardened.
Pre-bored.
Sprockets marked with * are made grey of grey cast iron GG25.

Ordering Details: e.g.: Product No. 125 111 00, ZRS, ISO 08 B-2, 11 Teeth

ISO 08 B-2, Pitch 1/2 x 5/16",
B_1 = 7 mm, B_2 = 21 mm c = 1.3 mm, r_3 = 13 mm

Product No.	Number of teeth	d_a mm	d mm	ND mm	B mm	L mm	Weigth kg
125 111 00	11	48,7	45,07	32	12	35	0,25
125 112 00	12	53,0	49,07	35	12	35	0,30
125 113 00	13	57,4	53,07	38	12	35	0,36
125 114 00	14	61,8	57,07	42	12	35	0,44
125 115 00	15	65,5	61,09	46	12	35	0,52
125 116 00	16	69,5	65,10	50	16	35	0,60
125 117 00	17	73,6	69,11	54	16	35	0,70
125 118 00	18	77,8	73,14	58	16	35	0,80
125 119 00	19	81,7	77,16	62	16	35	0,92
125 120 00	20	85,8	81,19	66	16	35	1,03
125 121 00	21	89,7	85,22	70	16	40	1,28
125 122 00	22	93,8	89,24	70	16	40	1,37
125 123 00	23	98,2	93,27	70	16	40	1,45
125 124 00	24	101,8	97,29	75	16	40	1,64
125 125 00	25	105,8	101,33	80	16	40	1,81
125 126 00	26	110,0	105,36	85	20	40	1,98
125 127 00	27	114,0	109,40	85	20	40	2,08
125 128 00	28	118,0	113,42	90	20	40	2,30
125 130 00	30	126,1	121,50	100	20	40	2,74
125 132 00	32	134,3	129,56	100	20	40	2,99
125 135 00	35	146,7	141,68	100	20	40	3,38
125 136 00	36	151,0	145,72	110	20	40	3,77
125 138 00	38	158,6	153,80	110	20	40	4,07
125 140 00	40	166,8	161,87	110	20	40	4,39
125 145 00*	45	188,0	182,07	90	24	50	3,32
125 157 00*	57	236,4	230,54	90	24	50	4,30
125 176 00*	76	313,3	307,33	100	24	56	6,27
125 183 00*	95	390,1	384,11	100	24	56	8,25
125 188 00*	114	466,9	460,90	100	24	63	10,51

Double-Strand plate wheels ZRL, ISO 08 B-2

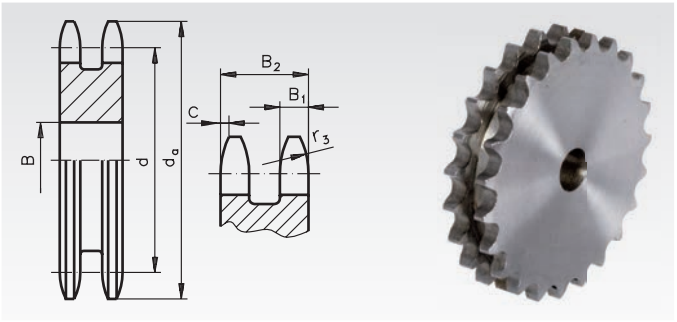

Material: Low-carbon steel, not hardable.
Pre-bored.

Ordering Details: e.g.: Product No. 125 211 00, ZRL, ISO 08 B-2, 11 Teeth

ISO 08 B-2, Pitch 1/2 x 5/16",
B_1 = 7 mm, B_2 = 21 mm c = 1.3 mm, r_3 = 13 mm

Product No.	Number of teeth	d_a mm	d mm	B mm	Weigth kg
125 211 00	11	48,7	45,07	10	0,17
125 212 00	12	53,0	49,07	10	0,21
125 213 00	13	57,4	53,07	10	0,26
125 214 00	14	61,8	57,07	10	0,30
125 215 00	15	65,5	61,09	10	0,35
125 216 00	16	69,5	65,10	12	0,40
125 217 00	17	73,6	69,11	12	0,46
125 218 00	18	77,8	73,14	12	0,53
125 219 00	19	81,7	77,16	12	0,60
125 220 00	20	85,8	81,19	12	0,68
125 221 00	21	89,7	85,22	16	0,74
125 222 00	22	93,8	89,24	16	0,82
125 223 00	23	98,2	93,27	16	0,90
125 224 00	24	101,8	97,23	16	1,00
125 225 00	25	105,8	101,33	16	1,08
125 226 00	26	110,0	105,36	16	1,19
125 227 00	27	114,0	109,40	16	1,30
125 228 00	28	118,0	113,42	16	1,40
125 230 00	30	126,1	121,50	16	1,63
125 232 00	32	134,3	129,56	16	1,87
125 235 00	35	146,7	141,68	16	2,27
125 236 00	36	151,0	145,72	20	2,36
125 238 00	38	158,6	153,80	20	2,70
125 240 00	40	166,8	161,87	20	2,97
125 245 00	45	188,0	182,07	20	3,86
125 248 00	48	200,3	194,18	20	4,42
125 254 00	54	224,1	218,43	25	5,59
125 257 00	57	236,4	230,54	25	6,29
125 276 00	76	313,3	307,33	25	11,42
125 283 00	95	390,1	384,11	25	18,00
125 288 00	114	466,9	460,90	25	26,50



Sprockets marked with * are made from grey cast iron GG25.



Reworking within 24h-service possible. Custom made parts on request.

Double-Strand Sprockets ZRS with Hub, ISO 10 B-2

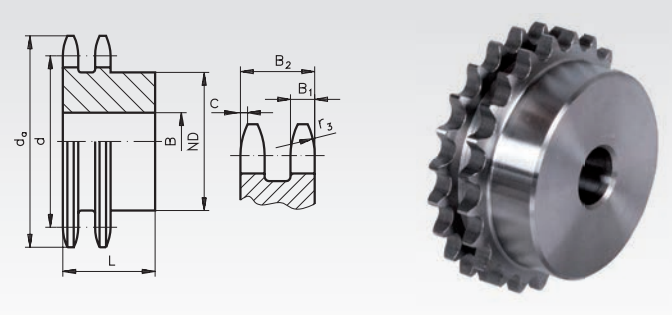

Material: Steel C45, not hardened.
Pre-bored.
Sprockets marked with * are made from grey cast iron GG25.

Ordering Details: e.g.: Product No. 126 111 00, ZRS, ISO 10 B-2, 11 Teeth

ISO 10 B-2, Pitch 5/8 x 3/8“,
B_1 = 9.0 mm, B_2 = 25.5 mm c = 1.6 mm, r_3 = 16 mm

Product No.	Number of teeth	d_a mm	d mm	ND mm	B mm	L mm	Weight kg
126 111 00	11	63,0	56,34	39	16	40	0,45
126 112 00	12	68,0	61,34	44	16	40	0,57
126 113 00	13	73,0	66,32	49	16	40	0,70
126 114 00	14	78,0	71,34	54	16	40	0,84
126 115 00	15	83,0	76,36	59	16	40	0,99
126 116 00	16	88,0	81,37	64	16	45	1,25
126 117 00	17	93,0	86,39	69	16	45	1,47
126 118 00	18	98,3	91,42	74	16	45	1,68
126 119 00	19	103,3	96,45	79	16	45	1,90
126 120 00	20	108,4	101,49	84	16	45	2,14
126 121 00	21	113,4	106,52	85	16	45	2,30
126 122 00	22	118,0	111,55	90	16	45	2,59
126 123 00	23	123,4	116,58	95	16	45	2,87
126 124 00	24	128,3	121,62	100	16	45	3,14
126 125 00	25	134,0	126,66	105	16	45	3,48
126 127 00	27	144,0	136,75	110	20	45	3,94
126 130 00	30	158,8	151,87	120	20	45	4,87
126 132 00	32	168,9	161,95	120	20	45	5,34
126 136 00	36	189,1	182,15	120	20	45	6,38
126 138 00	38	199,2	192,24	120	20	45	6,95
126 145 00*	45	235,0	227,58	100	30	50	5,08
126 157 00*	57	296,0	288,18	100	30	56	6,81
126 176 00*	76	392,1	384,16	100	30	63	8,30
126 183 00*	95	488,5	480,14	110	30	63	12,02
126 188 00*	114	584,1	576,13	125	30	70	16,50

Double-Strand plate wheels ZRL, ISO 10 B-2

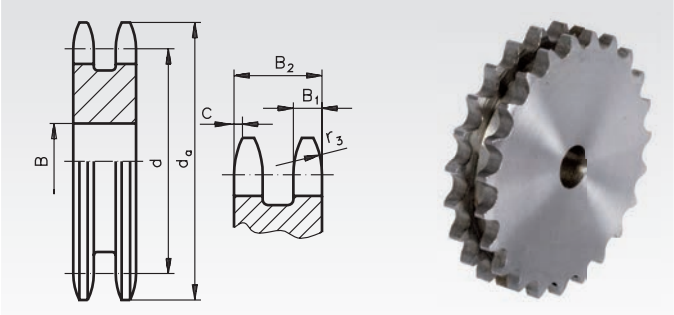

Material: Low-carbon steel, not hardable.
Pre-bored.

Ordering Details: e.g.: Product No. 126 211 00, ZRL, ISO 10 B-2, 11 Teeth

ISO 10 B-2, Pitch 5/8 x 3/8“,
B_1 = 9.0 mm, B_2 = 25.5 mm c = 1.6 mm, r_3 = 16 mm

Product No.	Number of teeth	d_a mm	d mm	B mm	Weight kg
126 211 00	11	63,0	56,34	12	0,34
126 212 00	12	68,0	61,34	12	0,41
126 213 00	13	73,0	66,32	12	0,51
126 214 00	14	78,0	71,34	12	0,59
126 215 00	15	83,0	76,36	12	0,71
126 216 00	16	88,0	81,37	12	0,80
126 217 00	17	93,0	86,38	12	0,93
126 218 00	18	98,3	91,42	12	1,07
126 219 00	19	103,3	96,45	12	1,15
126 220 00	20	108,4	101,49	12	1,33
126 221 00	21	113,4	106,52	16	1,48
126 222 00	22	118,0	111,55	16	1,60
126 224 00	24	128,3	121,62	16	1,99
126 226 00	26	139,0	131,70	20	2,31
126 227 00	27	144,0	136,75	20	2,55
126 228 00	28	148,7	141,78	20	2,77
126 230 00	30	158,8	151,87	20	3,19
126 235 00	35	184,1	177,10	20	4,40
126 238 00	38	199,2	192,24	20	5,28
126 245 00	45	235,0	227,58	25	7,51
126 248 00	48	250,2	242,73	25	8,54
126 257 00	57	296,0	288,18	25	12,23
126 276 00	76	392,1	384,16	25	22,00
126 283 00	95	488,5	480,14	30	34,50
126 288 00	114	584,1	576,13	30	43,43



Sprockets marked with * are made from grey cast iron GG25.



Reworking within 24h-service possible. Custom made parts on request.

Double-Strand Sprockets ZRS with Hub, ISO 12 B-2

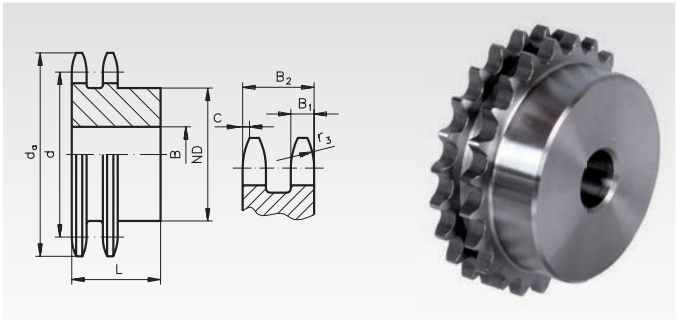

Material: Steel C45, not hardened.
Pre-bored.
Sprockets marked with * are made from grey cast iron GG25.

Ordering Details: e.g.: Product No. 127 111 00, ZRS, ISO 12 B-2, 11 Teeth

ISO 12 B-2, Pitch 3/4 x 7/16“,
B_1 = 10.8 mm, B_2 = 30.3 mm c = 2.0 mm, r_3 = 19 mm

Product No.	Number of teeth	d_a mm	d mm	ND mm	B mm	L mm	Weight kg
127 111 00	11	75,0	67,61	47	16	50	0,83
127 112 00	12	81,5	73,61	53	16	50	1,03
127 113 00	13	87,5	79,59	59	16	50	1,26
127 114 00	14	93,6	85,61	65	16	50	1,52
127 115 00	15	99,8	91,63	71	16	50	1,79
127 116 00	16	105,5	97,65	77	20	50	2,04
127 117 00	17	111,5	103,67	83	20	50	2,37
127 118 00	18	118,0	109,71	89	20	50	2,71
127 119 00	19	124,2	115,75	95	20	50	3,08
127 120 00	20	129,7	121,78	100	20	50	3,45
127 121 00	21	136,0	127,82	100	20	50	3,70
127 122 00	22	141,8	133,86	100	20	50	3,97
127 123 00	23	149,0	139,90	110	20	50	4,51
127 124 00	24	153,9	145,94	110	20	50	4,82
127 125 00	25	160,0	152,00	120	20	50	5,41
127 130 00	30	190,5	182,25	120	20	50	7,20
127 132 00	32	203,3	194,35	130	20	50	8,00
127 138 00	38	239,0	230,69	130	25	50	10,89
127 145 00*	45	282,5	273,10	110	30	63	8,33
127 157 00*	57	354,0	345,81	120	30	63	10,53
127 176 00*	76	469,9	460,99	135	30	63	16,04

Double-Strand plate wheels ZRL, ISO 12 B-2

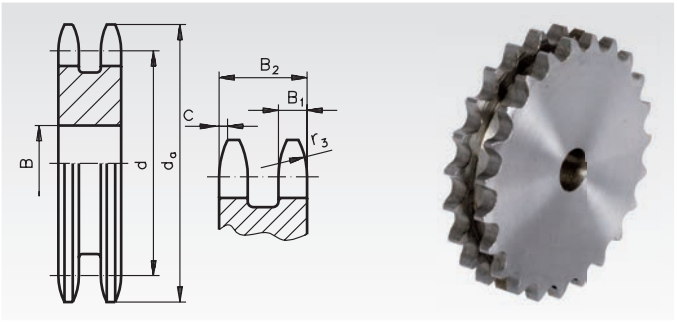

Material: Low-carbon steel, not hardable.
Pre-bored.

Ordering Details: e.g.: Product No. 127 211 00, ZRL, ISO 12 B-2, 11 Teeth

ISO 12 B-2, Pitch 3/4 x 7/16“,
B_1 = 10.8 mm, B_2 = 30.3 mm c = 2.0 mm, r_3 = 19 mm

Product No.	Number of teeth	d_a mm	d mm	B mm	Weight kg
127 211 00	11	75,0	67,61	14	0,56
127 212 00	12	81,5	73,61	14	0,72
127 213 00	13	87,5	79,59	14	0,88
127 214 00	14	93,6	85,61	16	1,04
127 215 00	15	99,8	91,63	16	1,21
127 216 00	16	105,5	97,65	16	1,41
127 218 00	18	118,0	109,71	16	1,81
127 220 00	20	129,7	121,78	16	2,31
127 222 00	22	141,8	133,86	20	2,79
127 224 00	24	153,9	145,94	20	3,43
127 227 00	27	172,3	164,09	20	4,38
127 230 00	30	190,5	182,25	20	5,49
127 235 00	35	221,0	212,52	20	7,58
127 238 00	38	239,0	230,69	25	8,99
127 245 00	45	282,5	273,10	25	12,86
127 248 00	48	300,1	291,27	25	14,50
127 257 00	57	355,4	345,81	25	20,85
127 276 00	76	469,9	460,99	30	37,50
127 283 00	95	585,1	576,17	30	58,00
127 288 00	114	700,6	691,36	30	86,00



Sprockets marked with * are made from grey cast iron GG25.



Reworking within 24h-service possible. Custom made parts on request.

Double-Strand Sprockets ZRS with Hub, ISO 16 B-2

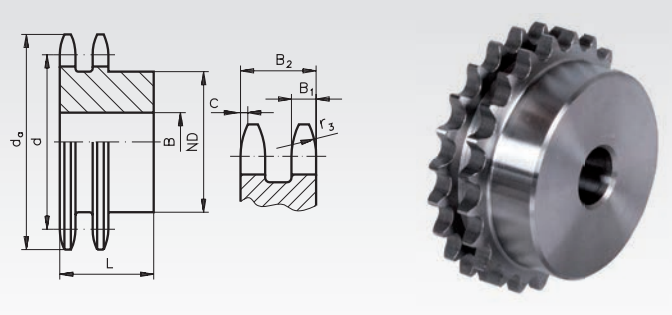

Material: Steel C45, not hardened.
Pre-bored.
Sprockets marked with * are made from grey cast iron GG25.

Ordering Details: e.g.: Product No. 128 111 00, ZRS, ISO 16 B-2, 11 Teeth

ISO 16 B-2, Pitch 1" x 17.02 mm,
B_1 = 15.8 mm, B_2 = 47.7 mm c = 2.5 mm, r_3 = 26 mm

Product No.	Number of teeth	d_a mm	d mm	ND mm	B mm	L mm	Weight kg
128 111 00	11	99,5	90,14	64	20	70	2,16
128 112 00	12	109,0	98,14	72	20	70	2,70
128 113 00	13	117,0	106,12	80	20	70	3,27
128 114 00	14	125,0	114,15	88	20	70	3,91
128 115 00	15	133,0	122,17	96	20	70	4,59
128 116 00	16	141,0	130,20	104	20	70	5,32
128 117 00	17	149,0	138,22	112	20	70	6,11
128 118 00	18	157,0	146,28	120	20	70	6,98
128 119 00	19	165,2	154,33	128	20	70	7,93
128 120 00	20	173,2	162,38	130	20	70	8,61
128 121 00	21	181,2	170,43	130	25	70	9,28
128 123 00	23	197,5	186,53	130	25	70	10,90
128 125 00	25	213,5	202,66	130	25	70	12,70
128 130 00	30	254,0	243,00	130	25	70	17,60
128 138 00*	38	320,0	307,59	140	40	75	18,60
128 145 00*	45	377,0	364,13	150	40	75	19,40
128 157 00*	57	474,0	461,08	170	40	90	31,00
128 176 00*	76	627,0	614,65	175	40	95	41,50

Double-Strand plate wheels ZRL, ISO 16 B-2

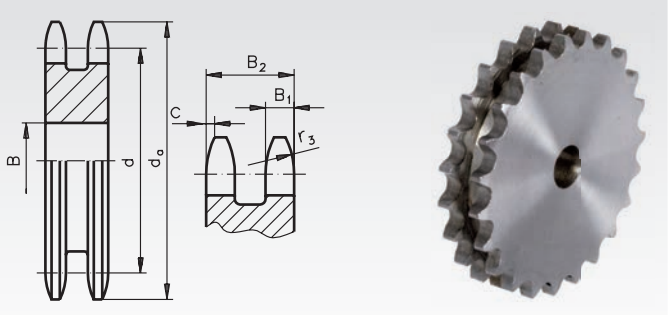

Material: Low-carbon steel, not hardable.
Pre-bored.

Ordering Details: e.g.: Product No. 128 211 00, ZRL, ISO 16 B-2, 11 Teeth

ISO 16 B-2, Pitch 1" x 17.02 mm,
B_1 = 15.8 mm, B_2 = 47.7 mm c = 2.5 mm, r_3 = 26 mm

Product No.	Number of teeth	d_a mm	d mm	B mm	Weight kg
128 211 00	11	99,5	90,14	20	1,63
128 212 00	12	109,0	98,14	20	1,98
128 214 00	14	125,0	114,15	20	2,86
128 216 00	16	141,0	130,20	20	3,86
128 218 00	18	157,0	146,28	20	5,10
128 220 00	20	173,0	162,38	20	6,30
128 222 00	22	189,3	178,48	25	7,80
128 224 00	24	205,5	194,59	25	9,40
128 227 00	27	229,6	218,79	25	12,20
128 230 00	30	254,0	243,00	25	15,20
128 235 00	35	296,2	283,36	25	21,00
128 236 00	36	304,6	291,44	25	22,46
128 238 00	38	320,7	307,59	25	25,00
128 245 00	45	377,1	364,13	25	35,50
128 248 00	48	401,3	388,36	30	39,00
128 257 00	57	474,0	461,07	40	53,50



Sprockets marked with * are made from grey cast iron GG25.



Reworking within 24h-service possible. Custom made parts on request.

Double-Strand Sprockets ZRS with Hub, ISO 20 B-2

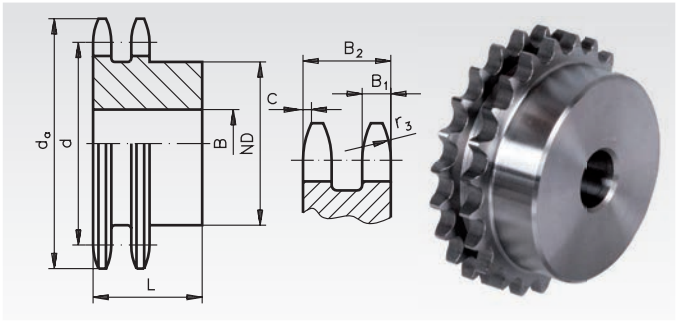

Material: Steel C45, not hardened.
Pre-bored.

Ordering Details: e.g.: Product No. 129 110 00, ZRS, ISO 20 B-2, 10 Teeth

ISO 20 B-2, Pitch 1 1/4 x 3/4",
B_1 = 18,5 mm, B_2 = 54,6 mm, c = 3,5 mm, r_3 = 32 mm

Product No.	Number of teeth	d_a mm	d mm	ND mm	B mm	L mm	Weight kg
129 110 00	10	117,0	102,74	70	20	75	2,85
129 111 00	11	127,0	112,68	80	20	80	3,72
129 112 00	12	137,0	122,68	90	20	80	4,66
129 113 00	13	147,5	132,65	100	20	80	5,70
129 114 00	14	157,6	142,68	110	20	80	6,84
129 115 00	15	167,7	152,72	120	20	80	8,08
129 116 00	16	177,7	162,75	120	25	80	8,90
129 117 00	17	187,7	172,78	120	25	80	9,92
129 118 00	18	197,8	182,85	120	25	80	11,00
129 119 00	19	207,9	192,91	120	25	80	12,16
129 120 00	20	217,9	202,98	120	25	80	13,38
129 125 00	25	268,4	253,33	140	25	80	21,36
129 130 00	30	318,7	303,75	150	25	80	30,69

Double-Strand Sprockets ZRS with Hub, ISO 24 B-2

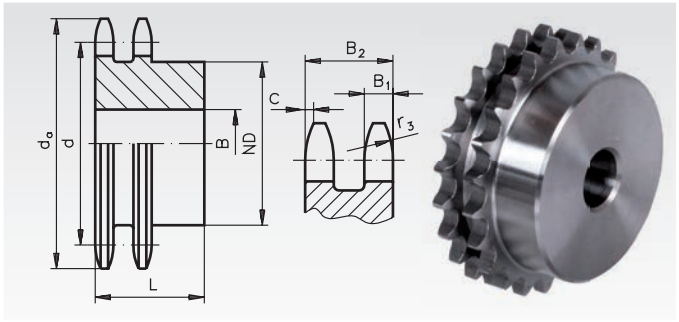

Material: Steel C45, not hardened.
Pre-bored.
Sprockets marked with 1) made from St52 with welded in hub.

Ordering Details: e.g.: Product No. 129 510 00, ZRS, ISO 24 B-2, 10 Teeth

ISO 24 B-2, Pitch 1 1/2 x 1",
B_1 = 24,1 mm, B_2 = 72 mm, c = 4 mm, r_3 = 38 mm

Product No.	Number of teeth	d_a mm	d mm	ND mm	B mm	L mm	Weight kg
129 510 00	10	137,0	123,29	80	25	95	5,01
129 511 00	11	149,0	135,21	90	25	100	6,62
129 512 00	12	161,0	147,22	102	25	100	8,28
129 513 00	13	173,0	159,18	114	25	100	10,13
129 514 00	14	185,0	171,22	128	25	100	12,24
129 515 00	15	197,0	183,26	140	25	100	14,08
129 516 00	16	209,0	195,30	140	25	100	15,88
129 517 00	17	221,0	207,34	150	25	100	17,80
129 518 00	18	233,0	219,42	160	25	100	21,08
129 519 00	19	245,5	231,49	160	25	100	23,26
129 520 00	20	257,5	243,57	160	25	100	25,57
129 525 00	25	319,0	304,00	160	25	100	39,09
129 530 00	30[1)]	379,5	364,50	160	30	100	55,88



Reworking within 24h-service possible. Custom made parts on request.

Triple-Strand Sprockets DRT for Taper Bushes

Material: Steel C45, not hardened or grey cast iron.

Sprockets for taper bushes, for easy and fast mounting.
The taper bush has to be ordered separately, see page 76.

Product numbers ending with G are made from grey cast iron GG25.

Ordering Details: e.g.: Product No. 131 771 17, DRT, ISO 06 B-3, 17 Teeth, Dimension bore with Reference to Taper Bush Type, see page 76.

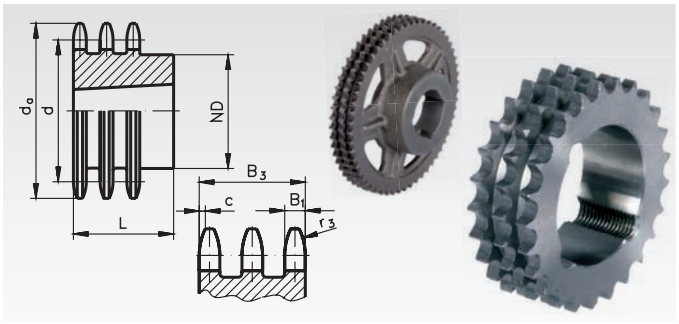

ISO 06 B-3, Pitch 3/8 x 7/32", B_1 = 5.3 mm, B_3 = 25.6 mm, c = 1.0 mm, r_3 = 10 mm

Product No. DRT	Number of teeth	d_a mm	d mm	ND mm	L mm	Weight kg	Taper bush
131 771 17	17	55,3	51,83	-	25,6	0,15	1008
131 771 19	19	61,3	57,87	-	25,6	0,24	1008
131 771 21	21	68,0	63,91	-	25,6	0,34	1008
131 771 23	23	73,5	69,95	-	25,6	0,30	1210
131 771 25	25	80,0	76,00	-	25,6	0,41	1210
131 771 27	27	86,0	82,05	-	25,6	0,55	1210
131 771 30	30	94,7	91,12	79	38,0	0,88	1615
131 771 38	38	119,5	115,35	90	38,0	1,75	1615

ISO 08 B-3, Pitch 1/2 x 5/16", B_1 = 7.2 mm, B_3 = 34.9 mm, c = 1.3 mm, r_3 = 13 mm

Product No. DRT	Number of teeth	d_a mm	d mm	ND mm	L mm	Weight kg	Taper bush
135 771 15	15	65,0	61,09	-	34,9	0,36	1008
135 771 17	17	73,6	69,11	-	34,9	0,35	1210
135 771 19	19	81,7	77,16	-	34,9	0,61	1210
135 771 21	21	89,7	85,22	-	34,9	0,65	1610
135 771 23	23	98,2	93,27	-	34,9	0,93	1610
135 771 25	25	105,8	101,33	-	34,9	0,85	2012
135 771 27	27	114,0	109,40	-	34,9	1,18	2012
135 771 30	30	126,1	121,50	-	34,9	1,73	2012
135 771 38	38	158,6	153,80	-	34,9	3,53	2012

ISO 10 B-3, Pitch 5/8 x 3/8", B_1 = 9.1 mm, B_3 = 42.1 mm, c = 1.6 mm, r_3 = 16 mm

Product No. DRT	Number of teeth	d_a mm	d mm	ND mm	L mm	Weight kg	Taper bush
136 771 15	15	83,2	76,35	-	42,1	0,63	1210
136 771 17	17	93,3	86,39	-	42,1	1,01	1210
136 771 19	19	103,3	96,44	-	42,1	1,19	1615
136 771 21	21	113,4	106,51	-	42,1	1,66	1615
136 771 23	23	123,5	116,58	-	42,1	1,78	2012
136 771 25	25	133,6	126,66	105	45,0	1,81	2517
136 771 27	27	143,6	136,74	110	45,0	2,45	2517
136 771 30	30	158,8	151,87	120	45,0	3,54	2517

ISO 12 B-3, Pitch 3/4 x 7/16", B_1 = 11.1 mm, B_3 = 49.8 mm, c = 2.0 mm, r_3 = 19 mm

Product No. DRT	Number of teeth	d_a mm	d mm	ND mm	L mm	Weight kg	Taper bush
137 771 15	15	99,8	91,62	-	49,8	1,11	1615
137 771 17	17	111,8	103,67	-	49,8	1,75	2012
137 771 19	19	123,9	115,73	-	49,8	2,02	2012
137 771 21	21	136,0	127,81	-	49,8	2,09	2517
137 771 23	23	148,1	139,90	-	49,8	3,00	2517
137 771 25	25	160,2	151,99	-	49,8	3,98	2517
137 771 27	27	172,3	164,09	140	51	3,90	3020
137 771 30	30	190,4	182,24	140	51	5,64	3020
137 771 38	38	239,0	230,69	140	51	11,58	3020
137 771 45	45	282,5	273,10	159	51	17,78	3020
137 771 45G	45	282,5	273,10	160	51	10,0	3020
137 771 57G	57	355,4	345,81	160	51	11,5	3020
137 771 76G	76	469,9	460,99	160	51	17,3	3020
137 771 83G	95	585,1	576,17	160	76	18,6	3030
137 771 88G	114	700,6	691,36	160	76	30,6	3030

ISO 16 B-3, Pitch 1" x 17.02 mm, B_1 = 16.2 mm, B_3 = 79.6 mm, c = 2.5 mm, r_3 = 26 mm

Product No. DRT	Number of teeth	d_a mm	d mm	ND mm	L mm	Weight kg	Taper bush
138 771 17	17	149,8	138,23	-	79,6	4,3	2517
138 771 19	19	165,9	154,31	-	79,6	4,4	3020
138 771 21	21	182,0	170,42	-	79,6	6,7	3030
138 771 23	23	198,1	186,53	-	79,6	7,8	3525
138 771 25	25	213,5	202,66	-	79,6	10,9	3525
138 771 27	27	230,4	218,79	-	79,6	14,1	3525
138 771 30	30	254,6	242,99	-	79,6	19,1	3525
138 771 38	38	320,7	307,59	-	79,6	34,0	3525
138 771 38G	38	320,7	307,59	178	89,0	19,9	3535
138 771 45G	45	377,1	364,13	216	102,0	30,0	4040
138 771 57G	57	474,0	461,07	216	102,0	38,0	4040
138 771 76G	76	627,0	614,65	216	102,0	53,3	4040
138 771 83	95	781,1	768,22	240	79,6	266,0	4030
138 771 83G	95	781,1	768,22	240	102,0	78,0	4040
138 771 88G	114	933,0	921,81	260	114,0	118,0	4545

Taper bushes page 76

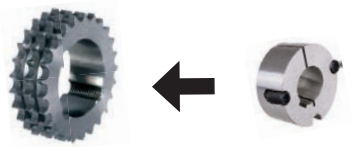

ISO 20 B-3, Pitch 1 1/4" x 3/4", B_1 = 18.5 mm, B_3 = 91 mm, c = 3.5 mm, r_3 = 32 mm

Product No. DRT	Number of teeth	d_a mm	d mm	ND mm	L mm	Weight kg	Taper bush
139 771 38G	38	399,6	384,49	178	89	35	3535
139 771 57G	57	591,5	576,36	216	102	62	4040
139 771 76G	76	783,5	768,32	240	102	79	4040

ISO 24 B-3, Pitch 1 1/2" x 1", B_1 = 24.1 mm, B_3 = 120.3 mm, c = 4 mm, r_3 = 38 mm

Product No. DRT	Number of teeth	d_a mm	d mm	ND mm	L mm	Weight kg	Taper bush
139 775 38G	38	476,2	461,39	216	102	66	4040
139 775 45G	45	561,2	546,20	216	102	80	4040
139 775 57G	57	706,5	691,63	240	102	120	4040
139 775 76G	76	936,9	921,98	260	114	179	4545

Triple-Strand Sprockets DRS with Hub, ISO 06 B-3

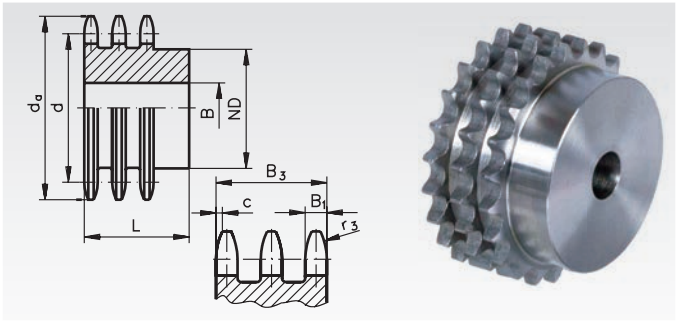

Material: Steel C45, not hardened.
Pre-bored.
Sprockets marked with * are made from grey cast iron GG25.

Ordering Details: e.g.: Product No. 131 108 00, DRS, ISO 06 B-3, 8 Teeth

ISO 06 B-3, Pitch 3/8 x 7/32“,
B_1 = 5.2 mm, B_3 = 25.6 mm, c = 1.0 mm, r_3 = 10 mm

Product No.	Number of teeth	d_a mm	d mm	ND mm	B mm	L mm	Weight kg
131 108 00	8	28,6	24,89	15	8	32	0,05
131 110 00	10	34,5	30,82	20	10	32	0,09
131 111 00	11	37,5	33,80	22	12	35	0,11
131 112 00	12	40,5	36,80	25	12	35	0,15
131 113 00	13	43,5	39,80	28	12	35	0,19
131 114 00	14	46,5	42,80	31	12	35	0,23
131 115 00	15	49,5	45,81	34	12	35	0,28
131 116 00	16	52,5	48,82	37	12	35	0,33
131 117 00	17	55,5	51,83	40	12	35	0,39
131 118 00	18	58,6	54,85	43	12	35	0,45
131 119 00	19	61,6	57,87	46	12	35	0,51
131 120 00	20	64,6	60,89	49	12	35	0,58
131 121 00	21	67,6	63,91	52	16	40	0,70
131 122 00	22	70,6	66,93	55	16	40	0,78
131 123 00	23	73,7	69,95	58	16	40	0,87
131 124 00	24	76,7	72,97	61	16	40	0,97
131 125 00	25	79,7	76,00	64	16	40	1,06
131 126 00	26	82,7	79,02	67	16	40	1,17
131 127 00	27	85,7	82,04	70	16	40	1,27
131 128 00	28	88,8	85,07	73	16	40	1,39
131 129 00	29	91,8	88,09	76	16	40	1,50
131 130 00	30	94,8	91,12	79	16	40	1,62
131 132 00	32	100,9	97,17	80	16	40	1,80
131 135 00	35	110,0	106,26	85	16	40	2,15
131 138 00	38	119,0	115,34	90	16	40	2,53
131 145 00*	45	141,1	136,54	90	24	56	3,56
131 157 00*	57	177,5	172,91	90	24	56	3,97
131 176 00*	76	235,1	230,49	100	24	56	4,52
131 183 00*	95	292,7	288,08	100	24	56	6,12
131 188 00*	114	350,3	345,68	100	24	56	7,45

Triple-Strand plate wheels DRL, ISO 06 B-3

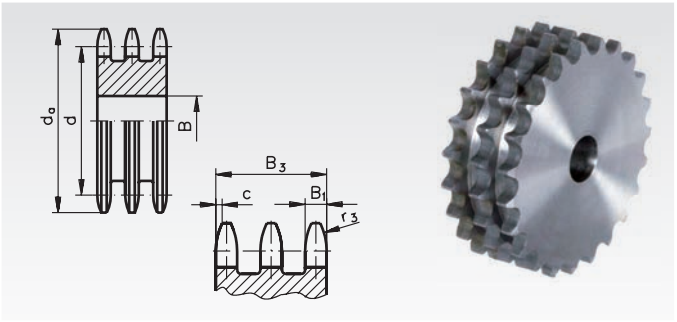

Material: Low-carbon steel, not hardable.
Pre-bored.

Ordering Details: e.g.: Product No. 131 208 00, DRL, ISO 06 B-3, 8 Teeth

ISO 06 B-3, Pitch 3/8 x 7/32“,
B_1 = 5.2 mm, B_3 = 25.6 mm, c = 1.0 mm, r_3 = 10 mm

Product No.	Number of teeth	d_a mm	d mm	B mm	Weight kg
131 208 00	8	28,6	24,89	8	0,04
131 211 00	11	37,5	33,80	12	0,09
131 212 00	12	40,5	36,80	12	0,12
131 213 00	13	43,5	39,80	12	0,15
131 214 00	14	46,5	42,80	12	0,18
131 215 00	15	49,5	45,81	12	0,22
131 216 00	16	52,5	48,82	12	0,26
131 217 00	17	55,5	51,83	12	0,30
131 218 00	18	58,6	54,85	12	0,35
131 219 00	19	61,6	57,87	12	0,39
131 220 00	20	64,6	60,89	12	0,44
131 221 00	21	67,6	63,91	16	0,48
131 222 00	22	70,6	66,93	16	0,54
131 223 00	23	73,7	69,95	16	0,59
131 224 00	24	76,7	72,97	16	0,66
131 225 00	25	79,7	76,00	16	0,72
131 226 00	26	82,7	79,02	16	0,79
131 227 00	27	85,7	82,04	16	0,86
131 228 00	28	88,8	85,07	16	0,93
131 230 00	30	94,8	91,12	16	1,09
131 238 00	38	119,0	115,34	20	1,81
131 240 00	40	125,1	121,40	20	2,02
131 242 00	42	132,1	127,46	20	2,25
131 245 00	45	141,1	136,54	20	2,61
131 248 00	48	150,2	145,64	20	2,99
131 257 00	57	177,5	172,91	25	4,28
131 276 00	76	235,1	230,49	25	7,83
131 283 00	95	292,7	288,08	25	12,42



Reworking within 24h-service possible. Custom made parts on request.

Triple-Strand Sprockets DRS with Hub, ISO 08 B-3

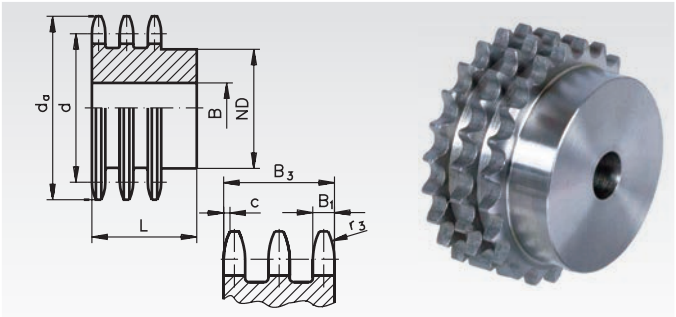

Material: Steel C45, not hardened.
Pre-bored.
Sprockets marked with * are made from grey cast iron GG25.

Ordering Details: e.g.: Product No. 135 108 00, DRS, ISO 08 B-3, 8 Teeth

ISO 08 B-3, Pitch 1/2 x 5/16“,
B_1 = 7 mm, B_3 = 34.9 mm, c = 1.3 mm, r_3 = 13 mm

Product No.	Number of teeth	d_a mm	d mm	ND mm	B mm	L mm	Weight kg
135 108 00	8	38,0	33,18	20	10	46	0,13
135 110 00	10	45,9	41,10	28	12	46	0,24
135 111 00	11	49,9	45,07	32	16	50	0,31
135 112 00	12	53,9	49,07	35	16	50	0,39
135 113 00	13	57,9	53,07	38	16	50	0,49
135 114 00	14	61,9	57,07	42	16	50	0,60
135 115 00	15	65,9	61,09	46	16	50	0,72
135 116 00	16	69,9	65,10	50	16	50	0,85
135 117 00	17	74,0	69,11	54	16	50	0,99
135 118 00	18	78,0	73,14	58	16	50	1,14
135 119 00	19	82,0	77,16	62	16	50	1,30
135 120 00	20	86,0	81,19	66	16	50	1,47
135 121 00	21	90,1	85,22	70	20	55	1,79
135 122 00	22	94,1	89,24	70	20	55	1,93
135 123 00	23	98,1	93,27	70	20	55	2,08
135 124 00	24	102,1	97,29	75	20	55	2,32
135 125 00	25	106,2	101,33	80	20	55	2,57
135 126 00	26	110,2	105,36	85	20	55	2,79
135 127 00	27	114,2	109,40	85	20	55	2,96
135 128 00	28	118,3	113,42	90	20	55	3,25
135 129 00	29	122,3	117,46	95	20	55	3,55
135 130 00	30	126,3	121,50	100	20	55	3,86
135 135 00	35	146,5	141,68	110	20	55	5,20
135 136 00	36	150,6	145,72	120	25	55	5,64
135 138 00	38	158,6	153,80	120	25	55	6,14
135 145 00*	45	188,6	182,07	100	24	60	5,85
135 157 00*	57	237,1	230,54	100	24	60	6,28
135 176 00*	76	313,9	307,33	100	24	60	8,60
135 183 00*	95	390,7	384,11	120	24	67	11,90

Triple-Strand Plate wheels DRL, ISO 08 B-3

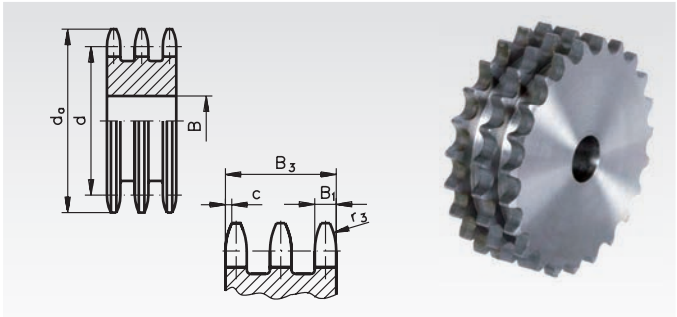

Material: Low-carbon steel, not hardable.
Pre-bored.

Ordering Details: e.g.: Product No. 135 208 00, DRL, ISO 08 B-3, 8 Teeth

ISO 08 B-3, Pitch 1/2 x 5/16“,
B_1 = 7 mm, B_3 = 34.9 mm, c = 1.3 mm, r_3 = 13 mm

Product No.	Number of teeth	d_a mm	d mm	B mm	Weight kg
135 208 00	8	38,0	33,18	10	0,11
135 210 00	10	45,9	41,10	10	0,21
135 211 00	11	49,9	45,07	12	0,26
135 212 00	12	53,9	49,07	12	0,33
135 213 00	13	57,9	53,07	12	0,40
135 214 00	14	61,9	57,07	12	0,48
135 215 00	15	65,9	61,09	12	0,57
135 216 00	16	69,9	65,10	16	0,64
135 217 00	17	74,0	69,11	16	0,74
135 218 00	18	78,0	73,14	16	0,85
135 219 00	19	82,0	77,16	16	0,97
135 220 00	20	86,0	81,19	16	1,09
135 221 00	21	90,1	85,22	16	1,22
135 222 00	22	94,1	89,24	16	1,36
135 223 00	23	98,1	93,27	16	1,50
135 224 00	24	102,1	97,29	16	1,63
135 225 00	25	106,2	101,33	16	1,81
135 226 00	26	110,2	105,36	16	1,98
135 227 00	27	114,2	109,40	16	2,15
135 228 00	28	118,3	113,42	16	2,33
135 229 00	29	122,3	117,46	16	2,52
135 230 00	30	126,3	121,50	16	2,71
135 235 00	35	146,5	141,68	20	3,76
135 236 00	36	150,6	145,72	20	3,99
135 238 00	38	158,6	153,80	20	4,49
135 240 00	40	166,7	161,87	20	5,00
135 245 00	45	188,6	182,07	25	6,39
135 257 00	57	237,1	230,54	25	10,53
135 276 00	76	313,9	307,33	25	19,17
135 283 00	95	390,7	384,11	25	30,36



Reworking within 24h-service possible. Custom made parts on request.

Triple-Strand Sprockets DRS with Hub, ISO 10 B-3

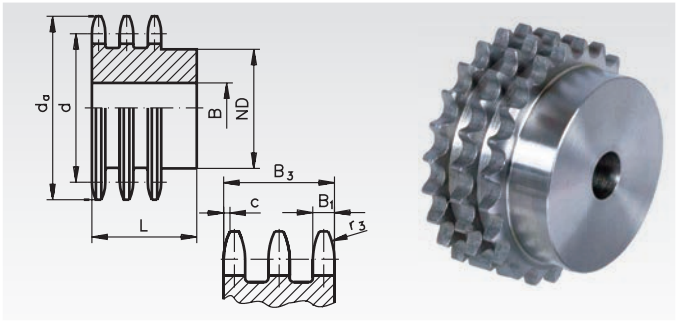

Material: Steel C45, not hardened.
Pre-bored.
Sprockets marked with * are made from grey cast iron GG25.

Ordering Details: e.g.: Product No. 136 108 00, DRS, ISO 10 B-3, 8 Teeth

ISO 10 B-3, Pitch 5/8 x 3/8“,
B_1 = 9 mm, B_3 = 42.1 mm, c = 1.6 mm, r_3 = 16 mm

Product No.	Number of teeth	d_a mm	d mm	ND mm	B mm	L mm	Weight kg
136 108 00	8	48,4	41,48	25	12	55	0,27
136 110 00	10	58,3	51,37	35	16	55	0,47
136 111 00	11	63,2	56,34	39	16	55	0,61
136 112 00	12	68,2	61,34	44	16	55	0,78
136 113 00	13	73,2	66,32	49	16	55	0,96
136 114 00	14	78,2	71,34	54	16	55	1,15
136 115 00	15	83,2	76,36	59	16	55	1,37
136 116 00	16	88,3	81,37	64	16	60	1,72
136 117 00	17	93,3	86,39	69	16	60	1,99
136 118 00	18	98,3	91,42	74	16	60	2,27
136 119 00	19	103,3	96,45	79	16	60	2,58
136 120 00	20	108,4	101,49	84	16	60	2,91
136 121 00	21	113,4	106,52	85	20	60	3,12
136 122 00	22	118,4	111,55	90	20	60	3,48
136 123 00	23	123,5	116,58	95	20	60	3,86
136 124 00	24	128,5	121,62	100	20	60	4,25
136 125 00	25	133,6	126,66	105	20	60	4,67
136 127 00	27	143,6	136,75	110	20	60	5,43
136 130 00	30	158,8	151,87	120	20	60	6,65
136 138 00	38	199,1	192,24	120	25	60	10,08
136 145 00*	45	236,0	227,58	100	32	60	7,04
136 157 00*	57	296,6	288,18	100	32	63	8,00
136 176 00*	76	392,5	384,16	110	35	67	12,00
136 183 00*	95	488,5	480,14	125	35	70	19,40
136 188 00*	114	584,5	576,13	125	35	80	24,00

Triple-Strand plate wheels DRL, ISO 10 B-3

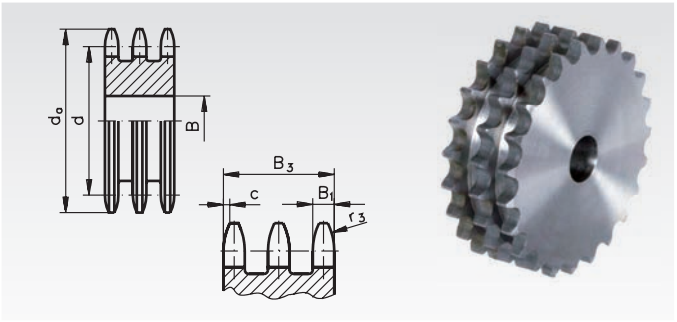

Material: Low-carbon steel, not hardable.
Pre-bored.

Ordering Details: e.g.: Product No. 136 208 00, DRL, ISO 10 B-3, 8 Teeth

ISO 10 B-3, Pitch 5/8 x 3/8“,
B_1 = 9 mm, B_3 = 42.1 mm, c = 1.6 mm, r_3 = 16 mm

Product No.	Number of teeth	d_a mm	d mm	B mm	Weight kg
136 208 00	8	48,4	41,48	12	0,23
136 212 00	12	68,2	61,34	12	0,67
136 213 00	13	73,2	66,32	12	0,81
136 214 00	14	78,2	71,34	12	0,97
136 215 00	15	83,2	76,36	12	1,14
136 216 00	16	88,3	81,37	16	1,29
136 217 00	17	93,3	86,39	16	1,49
136 218 00	18	98,3	91,42	16	1,70
136 219 00	19	103,3	96,45	16	1,92
136 220 00	20	108,4	101,49	16	2,15
136 221 00	21	113,4	106,52	16	2,40
136 222 00	22	118,4	111,55	16	2,66
136 223 00	23	123,5	116,58	16	2,94
136 224 00	24	128,5	121,62	16	3,23
136 225 00	25	133,6	126,66	16	3,53
136 227 00	27	143,6	136,75	20	4,13
136 228 00	28	148,7	141,78	20	4,47
136 229 00	29	153,7	146,83	20	4,83
136 230 00	30	158,8	151,87	20	5,20
136 235 00	35	184,0	177,10	20	7,23
136 238 00	38	199,1	192,24	25	8,55
136 245 00	45	236,0	227,58	25	12,24
136 257 00	57	296,6	288,18	25	20,06
136 283 00	95	488,5	480,14	30	57,32
136 288 00	114	584,5	576,13	30	83,15



Reworking within 24h-service possible. Custom made parts on request.

Triple-Strand Sprockets DRS with Hub, ISO 12 B-3

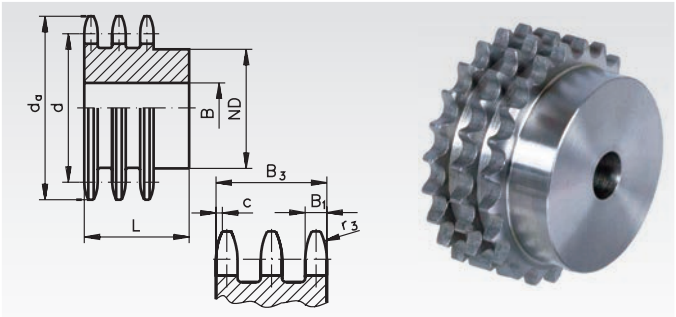

Material: Steel C45, not hardened.
Pre-bored.
Sprockets marked with * are made from grey cast iron GG25.

Ordering Details: e.g.: Product No. 137 108 00, DRS, ISO 12 B-3, 8 Teeth

ISO 12 B-3, Pitch 3/4 x 7/16“,
B_1 = 10.8 mm, B_3 = 49.8 mm, c = 2.0 mm, r_3 = 19 mm

Product No.	Number of teeth	d_a mm	d mm	ND mm	B mm	L mm	Weight kg
137 108 00	8	58,0	49,78	31	16	65	0,45
137 110 00	10	69,8	61,64	42	16	65	0,86
137 111 00	11	75,8	67,61	47	20	70	1,09
137 112 00	12	81,8	73,60	53	20	70	1,39
137 113 00	13	87,8	79,59	59	20	70	1,72
137 114 00	14	93,8	85,61	65	20	70	2,08
137 115 00	15	99,8	91,63	71	20	70	2,47
137 116 00	16	105,8	97,65	77	20	70	2,89
137 117 00	17	111,9	103,67	83	20	70	3,34
137 118 00	18	117,9	109,71	89	20	70	3,83
137 119 00	19	123,9	115,75	95	20	70	4,35
137 120 00	20	130,0	121,78	100	20	70	4,87
137 121 00	21	136,0	127,82	100	20	70	5,20
137 122 00	22	142,0	133,86	100	20	70	5,65
137 123 00	23	148,1	139,90	110	20	70	6,38
137 124 00	24	154,1	145,94	110	20	70	6,87
137 125 00	25	160,2	152,00	120	20	70	7,77
137 130 00	30	190,4	182,25	120	20	70	10,59
137 138 00	38	238,9	230,69	130	25	70	16,73
137 145 00*	45	283,2	273,10	140	30	70	13,30
137 157 00*	57	355,9	345,81	140	40	70	15,25
137 176 00*	76	471,1	460,99	160	40	75	27,20
137 183 00*	95	586,2	576,17	170	40	82	36,40

Triple-Strand Plate wheels DRL, ISO 12 B-3

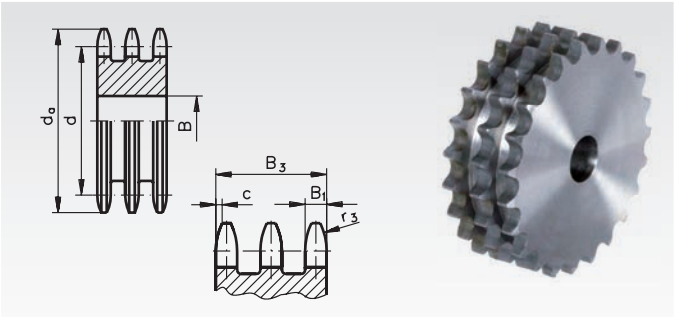

Material: Low-carbon steel, not hardable.
Pre-bored.

Ordering Details: e.g.: Product No. 137 211 00, DRL, ISO 12 B-3, 11 Teeth

ISO 12 B-3, Pitch 3/4 x 7/16“,
B_1 = 10.8 mm, B_3 = 49.8 mm, c = 2.0 mm, r_3 = 19 mm

Product No.	Number of teeth	d_a mm	d mm	B mm	Weight kg
137 211 00	11	75,8	67,61	16	0,91
137 212 00	12	81,8	73,50	16	1,13
137 213 00	13	87,8	79,59	16	1,38
137 214 00	14	93,8	85,61	16	1,64
137 215 00	15	99,8	91,63	16	1,93
137 216 00	16	105,8	97,65	20	2,20
137 217 00	17	111,9	103,67	20	2,54
137 218 00	18	117,9	109,71	20	2,89
137 219 00	19	123,9	115,75	20	3,27
137 220 00	20	130,0	121,78	20	3,67
137 222 00	22	142,0	133,86	20	4,55
137 225 00	25	160,2	152,00	20	6,02
137 230 00	30	190,4	182,25	20	8,97
137 235 00	35	220,7	212,52	25	12,35
137 238 00	38	238,9	230,69	25	14,70
137 240 00	40	251,0	242,81	25	16,40
137 245 00	45	283,2	273,10	25	21,00
137 248 00	48	301,4	291,27	25	24,04
137 257 00	57	355,9	345,81	30	34,28
137 276 00	76	471,1	460,99	30	62,09
137 283 00	95	586,2	576,17	30	98,04

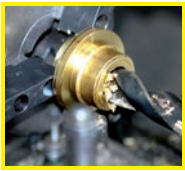

Reworking within 24h-service possible. Custom made parts on request.

Triple-Strand Sprockets DRS with Hub, ISO 16 B-3

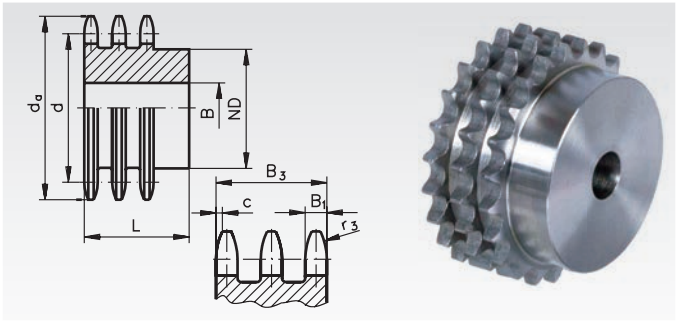

Material: Steel C45, not hardened.
Pre-bored.
Sprockets marked with * are made from grey cast iron GG25.

Ordering Details: e.g.: Product No. 138 108 00, DRS, ISO 16 B-3, 8 Teeth

ISO 16 B-3, Pitch 1" x 17.02 mm,
B_1 = 15.8 mm, B_3 = 79.6 mm, c = 2.5 mm, r_3 = 26 mm

Product No.	Number of teeth	d_a mm	d mm	ND mm	B mm	L mm	Weight kg
138 108 00	8	77,9	66,37	42	20	95	1,19
138 109 00	9	85,8	74,26	50	20	95	1,68
138 110 00	10	93,8	82,19	56	20	95	2,24
138 111 00	11	101,7	90,14	64	25	100	2,86
138 112 00	12	109,7	98,14	72	25	100	3,62
138 113 00	13	117,7	106,12	80	25	100	4,45
138 114 00	14	125,7	114,15	88	25	100	5,37
138 115 00	15	133,7	122,17	96	25	100	6,37
138 116 00	16	141,8	130,20	104	30	100	7,45
138 117 00	17	149,8	138,22	112	30	100	8,60
138 118 00	18	157,8	146,28	120	30	100	9,84
138 119 00	19	165,9	154,33	128	30	100	11,16
138 120 00	20	173,2	162,38	130	30	100	12,36
138 121 00	21	182,0	170,43	130	30	100	13,56
138 122 00	22	190,1	178,48	130	30	100	14,82
138 123 00	23	198,1	186,53	130	30	100	16,15
138 124 00	24	206,2	194,59	130	30	100	17,53
138 125 00	25	213,5	202,66	130	30	100	18,99
138 126 00	26	222,3	210,72	130	30	100	20,34
138 127 00	27	230,4	218,79	130	30	100	21,92
138 128 00	28	238,4	226,85	130	30	100	23,57
138 129 00	29	246,5	234,92	130	30	100	25,27
138 130 00	30	254,6	243,00	130	30	100	27,05
138 131 00	31	262,6	251,08	140	30	100	29,23
138 132 00	32	270,7	259,13	140	30	100	31,13
138 135 00	35	294,9	283,36	140	30	100	37,23
138 136 00	36	303,0	291,44	140	30	100	39,39
138 138 00*	38	319,2	307,59	160	45	100	25,40
138 145 00*	45	377,9	364,12	160	45	100	33,60
138 157 00*	57	474,9	461,07	165	45	100	44,70
138 176 00*	76	628,4	614,65	200	45	110	63,10
138 183 00*	95	782,0	768,22	200	50	110	77,00
138 188 00*	114	935,6	921,81	200	50	115	97,00

Triple-Strand Plate wheels DRL, ISO 16 B-3

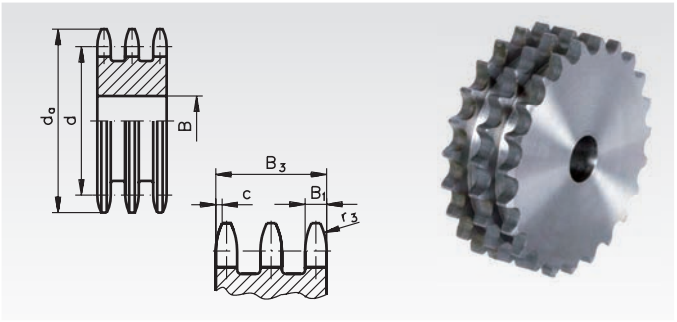

Material: Low-carbon steel, not hardable.
Pre-bored.

Ordering Details: e.g.: Product No. 138 208 00, DRL, ISO 16 B-3, 8 Teeth

ISO 16 B-3, Pitch 1" x 17.02 mm,
B_1 = 15.8 mm, B_3 = 79.6 mm, c = 2.5 mm, r_3 = 26 mm

Product No.	Number of teeth	d_a mm	d mm	B mm	Weight kg
138 208 00	8	77,9	66,37	20	1,13
138 210 00	10	93,8	82,19	20	2,05
138 212 00	12	109,7	98,14	20	3,15
138 214 00	14	125,7	114,15	20	4,59
138 216 00	16	141,8	130,20	30	6,16
138 218 00	18	157,8	146,28	30	8,11
138 220 00	20	173,2	162,38	30	10,31
138 222 00	22	190,1	178,48	30	12,77
138 224 00	24	206,2	194,59	30	14,49
138 227 00	27	230,4	218,79	30	19,91
138 230 00	30	254,6	243,00	30	25,04
138 235 00	35	294,9	283,36	30	34,88
138 238 00	38	319,2	307,59	30	41,56
138 245 00	45	377,9	364,12	30	59,36
138 248 00	48	402,1	388,36	30	67,69
138 257 00	57	474,9	461,07	40	96,87



Reworking within 24h-service possible. Custom made parts on request.

Mounting Options for Drive Wheels

There are several possibilities for mounting driving wheels (sprockets, V-Belt Pulleys, pulleys, spur gears etc.) or hubs on shafts. Most wheels are stocked with a rather small bore to allow for further machining. Machining works as drilling out, keywaying a.s.o. can be done at extra charge.

Please note: for several shaft diameters a number of sprockets, V-belt pulleys, spur gears and worm-gear sets are in stock "ready-to-install", i.e. with custom bore and keyway or prepared for Taper clamping bushes.



Fixing Pins

A hole is drilled through hub and shaft and both parts are then connected with a fixing pin. Usually only one side of the hub is pre-drilled, then the wheel is pushed onto the shaft and the hole is drilled through both shaft and the other side of the hub. Then the pin is driven in. This mounting method is suitable for low torques.

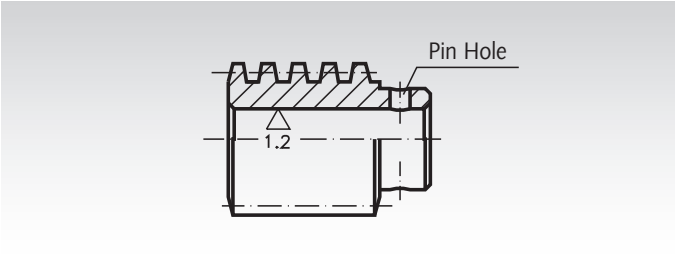

Feather Key Connection

Shaft and hub both receive a keyway, a key is pushed into the keyway of the hub. The wheel is pushed onto the shaft and secured against axial movement (with a set screw or with a stepped shaft and axial screw and washer at the end of the shaft). The most common kind of keyway is DIN 6885/1. Key connections are suitable for medium torques. Keys DIN 6885 see page 578 and 579. Boxes with an assortment of keys DIN 6885 see page 577.

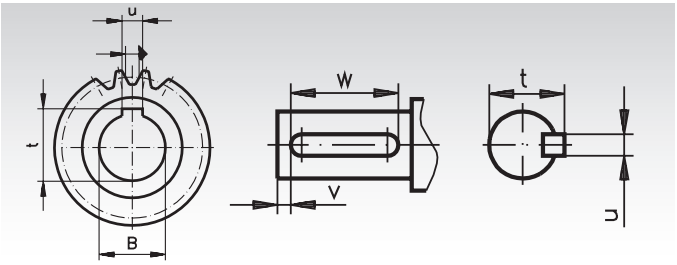

Clamping Sets, Clamping Bushes and Shrink Disks

Clamping sets and thin-walled clamping bushes are available for various diameters. They allow fast and easy mounting on round shafts. A keyway is not required. Shrink disks are special clamping sets which press a thin-walled hub onto a shaft. Clamping connections are suitable for rather high torques. **Clamping sets and bushes, and shrink disks** see page 330.

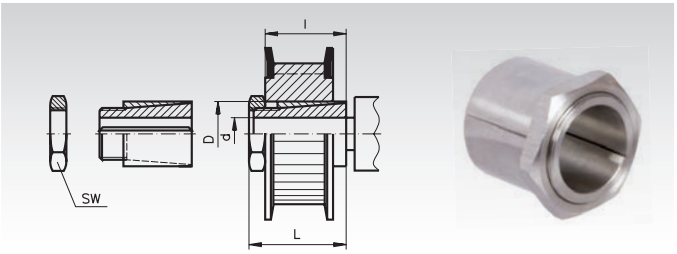

Taper Clamping Bushes

These customary conical bushes are used for easy and fast mounting of driving elements in Taper version. They can be used with and without key.

The bushes are available with various outer dimensions. For every outside measure there are bushes with many different bores available. This mounting method is cost-efficient and fast, and suitable for rather high torques. A large selection of cost-efficient driving elements in Taper version are available ex stock:

- Taper clamping bushes
- Welding hubs for taper bushes
- Taper sprockets
- Taper V-belt pulleys
- Taper pulleys
- Taper couplings



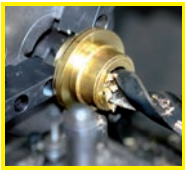

Reworking within 24h-service possible. Custom made parts on request.

Rolling bearings at MÄDLER®:



Ball bearings, open



Ball bearings, 2Z



Ball bearings, 2RS

SKF®

The premium brand
- for the sophisiticated application

MÄDLER® GEGRÜNDET 1882

The reliable brand
- the inexpensive option



Angular contact ball bearings



Self aligning ball bearings



Cylindrical roller bearings



Spherical roller bearings



Tapered roller bearings

The rolling bearings are to find:

- *in this catalog page 416*
- *on the internet at www.maedler.de*

Chain Tensioning Wheels KSP with Bearing for Single-Strand Roller Chain DIN ISO 606 (ex DIN 8187)

Material: Sprocket steel C45, burnished.
Bearing made from roller bearing steel.

Ready-to-mount idlers, complete with bearing.

Cost-efficient. Can be mounted at the deflection or tensioning points. Perfect workmanship and stable mounting of the ball bearing with shields on both sides guarantee a high resistance against breakage and wear. Easy to mount by the extra long internal ring. Also suitable for agricultural and textile machines. Maintenance-free bearing, with grease filling.

Temperature range: -20° to +120°C.

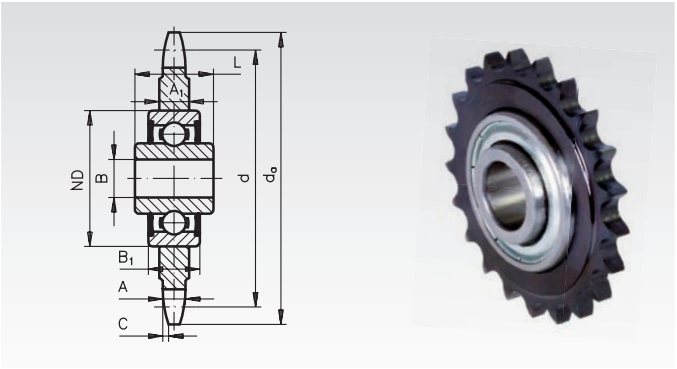

Ordering Details: e.g.: Product No. 140 000 00 KSP, 05 - B1

Product No.	DIN ISO	Pitch	Number of teeth	d_a mm	d mm	A mm	A_1 mm	C mm	B mm	ND mm	B_1 mm	L mm	Weight g
140 000 00	05 B-1	8mm	23	62,2	58,75	2,8	7,0	0,8	$16^{+0,26}_{+0,13}$	40	12	18,3	125
140 001 20	06 B-1	3/8 x 7/32“	20	64,3	60,89	5,3	7,0	1,0	$16^{+0,26}_{+0,13}$	40	12	18,3	135
140 001 00	06 B-1	3/8 x 7/32“	21	68,0	63,90	5,3	7,0	1,0	$16^{+0,26}_{+0,13}$	40	12	18,3	145
140 002 00	081	1/2 x 1/8“	18	78,9	73,14	3,0	7,0	1,3	$16^{+0,26}_{+0,13}$	40	12	18,3	170
140 003 16	083	1/2 x 3/16“	16	70,9	65,10	4,5	7,0	1,3	$16^{+0,26}_{+0,13}$	40	12	18,3	169
140 003 00	083	1/2 x 3/16“	18	78,9	73,14	4,5	7,0	1,3	$16^{+0,26}_{+0,13}$	40	12	18,3	195
140 005 14	08 B-1	1/2 x 5/16“	14	61,8	57,07	7,2	7,2	1,3	$16^{+0,26}_{+0,13}$	40	12	18,3	117
140 005 15	08 B-1	1/2 x 5/16“	15	65,5	61,09	7,2	7,2	1,3	$16^{+0,26}_{+0,13}$	40	12	18,3	145
140 005 16	08 B-1	1/2 x 5/16“	16	69,5	65,10	7,2	7,2	1,3	$16^{+0,26}_{+0,13}$	40	12	18,3	163
140 005 00	08 B-1	1/2 x 5/16“	18	77,8	73,14	7,2	7,2	1,3	$16^{+0,26}_{+0,13}$	40	12	18,3	210
140 005 20	08 B-1	1/2 x 5/16“	20	85,8	81,19	7,2	7,2	1,3	$16^{+0,26}_{+0,13}$	40	12	18,3	265
140 005 21	08 B-1	1/2 x 5/16“	21	89,7	85,22	7,2	7,2	1,3	$16^{+0,26}_{+0,13}$	40	12	18,3	289
140 006 13	10 B-1	5/8 x 3/8“	13	73,0	66,32	9,1	9,1	1,6	$16^{+0,26}_{+0,13}$	40	12	18,3	215
140 006 14	10 B-1	5/8 x 3/8“	14	78,0	71,34	9,1	9,1	1,6	$16^{+0,26}_{+0,13}$	40	12	18,3	245
140 006 15	10 B-1	5/8 x 3/8“	15	83,0	73,36	9,1	9,1	1,6	$16^{+0,26}_{+0,13}$	40	12	18,3	285
140 006 16	10 B-1	5/8 x 3/8“	16	88,0	81,37	9,1	9,1	1,6	$16^{+0,26}_{+0,13}$	40	12	18,3	325
140 006 00	10 B-1	5/8 x 3/8“	17	93,0	86,39	9,1	9,1	1,6	$16^{+0,26}_{+0,13}$	40	12	18,3	355
140 006 18	10 B-1	5/8 x 3/8“	18	98,3	91,42	9,1	9,1	1,6	$16^{+0,26}_{+0,13}$	40	12	18,3	405
140 006 21	10 B-1	5/8 x 3/8“	21	113,4	106,52	9,1	9,1	1,6	$16^{+0,26}_{+0,13}$	40	12	18,3	565
140 007 12	12 B-1	3/4 x 7/16“	12	81,5	73,60	11,1	11,1	2,0	$16^{+0,26}_{+0,13}$	40	12	18,3	280
140 007 13	12 B-1	3/4 x 7/16“	13	87,5	79,59	11,1	11,1	2,0	$16^{+0,26}_{+0,13}$	40	12	18,3	340
140 007 00	12 B-1	3/4 x 7/16“	15	99,8	91,63	11,1	11,1	2,0	$16^{+0,26}_{+0,13}$	40	12	18,3	470
140 007 16	12 B-1	3/4 x 7/16“	16	105,5	97,65	11,1	11,1	2,0	$16^{+0,26}_{+0,13}$	40	12	18,3	540
140 008 00	16 B-1	1“ x 17,02mm	12	109,0	98,14	16,2	16,2	2,5	$20^{+0}_{-0,01}$	47	14	17,7	705
140 008 15	16 B-1	1“ x 17,02mm	15	133,0	122,17	16,2	16,2	2,5	$20^{+0}_{-0,01}$	47	14	17,7	1185
140 008 17	16 B-1	1“ x 17,02mm	17	149,0	138,24	16,2	16,2	2,5	$20^{+0}_{-0,01}$	47	14	17,7	1545
140 009 00	20 B-1	1 1/4 x 3/4“	13	147,8	132,65	18,5	18,5	3,5	$25^{+0}_{-0,01}$	52	15	21,0	1610

Mounting Screws for tensioning Wheels KSP

Material: Steel C45, zinc-plated.

Product No. 140 000 01: Screw for chain tensioning wheels KSP up to size 12 B-1 (bore 16mm).

Product No. 140 008 01: Screw for chain tensioning wheel KSP, only for size 16 B-1 (bore 20mm).

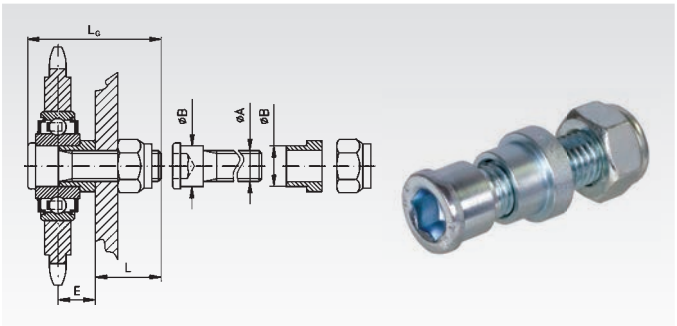

Product No.	A	B mm	E mm	L mm	L_G mm	Weight g
140 000 01	M12	$16^{+0,1}$	15	25	52	80
140 008 01	M16	$20^{-0,05}_{-0,15}$	25	28	66	160

Loctite thread locking and bonding products page 811.

Chain Tensioning Wheels KSP-R with Bearing for Single-Strand Roller Chain DIN ISO 606, Stainless Steel

Material: Sprocket stainless steel 1.4305.
Ball bearing stainless steel.

Ready-to-mount idlers, complete with bearing.

Cost-efficient. Can be mounted at the deflection or tensioning points. Perfect workmanship and stable mounting of the ball bearing with shields on both sides guarantee a high resistance against breakage and wear. Maintenance-free bearing, with grease filling.

Temperature range: -20° to +120°C.

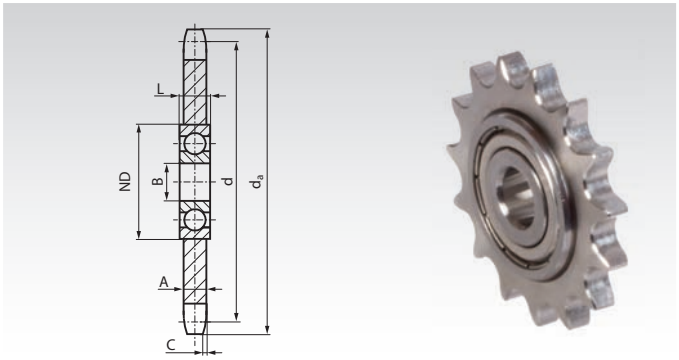

Ordering Details: e.g.: Product No. 140 990 01, Chain Tensioning Wheel KSP-R, 06 B-1

Product No.	DIN ISO	Pitch Inch	Number of teeth	d_a mm	d mm	A mm	C mm	B mm	ND mm	L mm	Weight kg
140 990 01	06 B-1	3/8 x 7/32"	15	49,5	45,81	5,3	1,0	$10^{+0}_{-0,008}$	30	9	0,06
140 990 05	08 B-1	1/2 x 5/16"	15	65,9	61,09	7,2	1,3	$10^{+0}_{-0,008}$	30	9	0,15
140 990 06	10 B-1	5/8 x 3/8"	15	83,2	76,36	9,1	1,6	$12^{+0}_{-0,008}$	37	12	0,27
140 990 07	12 B-1	3/4 x 7/16"	15	99,8	91,63	11,1	2,0	$12^{+0}_{-0,008}$	37	12	0,47
140 990 08	16 B-1	1" x 17,02mm	13	117,7	106,12	16,2	2,5	$20^{+0}_{-0,010}$	52	15	0,88

Sprocket Sets for Chain Tensioners Single, Stainless Steel

Material: Sprocket stainless steel 1.4305.
Ball bearing, screw and nuts stainless steel.

The sprocket can be moved on the screw and thus be aligned with the chain. It is locked in the desired position with the nuts. The permanently lubricated 2-Z bearings are sealed on both sides and guarantee perfect running of the sprocket.

Temperature range: -20° to +120°C.

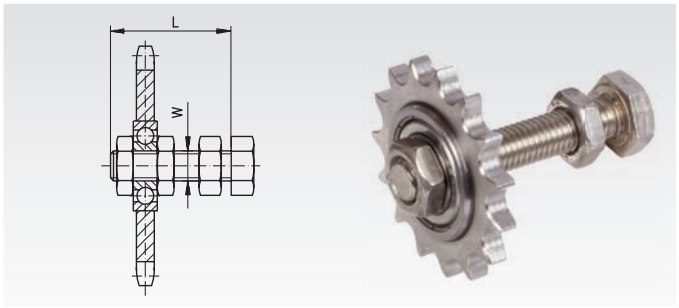

Ordering Details: e.g.: Product No. 140 995 01, Sprocket Set for Chain Tensioner 06 B-1

Product No.	Matching Tensioning Element Size	DIN ISO	Number of Teeth	Pitch Ø mm	L mm	W mm	Weight kg
140 995 01	1 and 2	06 B - 1	15	45,81	55	M10	0,08
140 995 05	1 and 2	08 B - 1	15	61,08	55	M10	0,20
140 995 06	3	10 B - 1	15	76,36	80	M12	0,30
140 995 07	3	12 B - 1	15	91,63	80	M12	0,51
140 995 08	4	16 B - 1	13	106,14	100	M20	0,95

Chain Tensioners SPANN-BOX® Size 0, for Roller Chains DIN ISO 606 (ex DIN 8187)

Material: Housing from thermoplast.
Chain rider from low pressure polyethylene PE-UHMW.
Screws and spring from stainless steel.

These small, ready-to install tensioners enable noise reduction and wear reduction at chain drives.

- With spiral, linear spring. On choice two tensioning forces.
- With colored wear-off indicator: Green: o.k. Yellow: still o.k. Red: Tensioning force too low (below 32N or 60N).
- Usable travel up to the end of the yellow range: About 32mm. Total travel about 40mm.
- Interchangeable with similar parts of other suppliers.

Temperature range: -20°C to +60°C (short time up to +80°C).

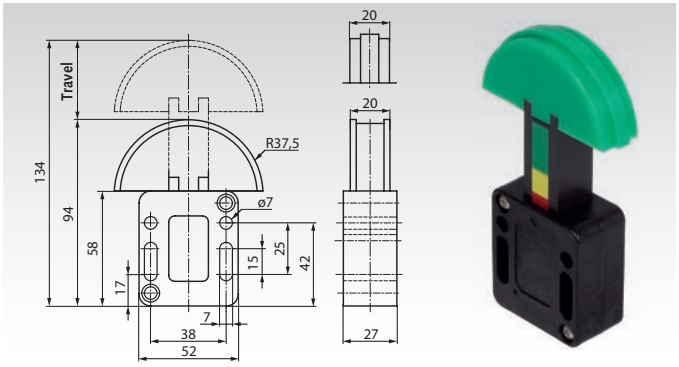

Ordering Details: e.g.: Product No. 140 401 01, Spann-Box Size 0, low Tensioning Force, 06 B-1

SPANN-BOX® Size 0 with low Tensioning Force

Product No.	DIN ISO	Pitch Inch	Tens. Force N	Weight g
140 401 01	≤ 06 B-1	3/8 x 7/32“	58 - 32	130
140 401 05*	08 B-1	1/2 x 5/16“	58 - 32	130
140 401 05*	10 B-1	5/8 x 3/8“	58 - 32	135
140 401 07	12 B-1	3/4 x 7/16“	58 - 32	135
140 401 21	06 B-2	3/8 x 7/32“	58 - 32	130
140 401 25	08 B-2	1/2 x 5/16“	58 - 32	130
140 401 26	10 B-2	5/8 x 3/8“	58 - 32	135

SPANN-BOX® Size 0 with high Tensioning Force

Product No.	DIN ISO	Pitch Inch	Tens. Force N	Weight g
140 402 01	≤ 06 B-1	3/8 x 7/32“	132 - 60	130
140 402 05*	08 B-1	1/2 x 5/16“	132 - 60	130
140 402 05*	10 B-1	5/8 x 3/8“	132 - 60	135
140 402 07	12 B-1	3/4 x 7/16“	132 - 60	135
140 402 21	06 B-2	3/8 x 7/32“	132 - 60	130
140 402 25	08 B-2	1/2 x 5/16“	132 - 60	130
140 402 26	10 B-2	5/8 x 3/8“	132 - 60	135

* This size fits 08 B-1 and 10 B-1.

Mounting of SPANN-BOX® Size 0

At front- and backside, there is a small hole for a locking pin (pin is included at the bottom of the housing). With this pin, the tensioner can be locked at maximum force for easy mounting. Recommendation: Mounting on slack side. The chain should be in contact with several links. To reach a sufficient contact angle, it may be useful to mount an idler wheel (e.g. KSP or KSP-R) near by the tensioner.

Operating Instructions at www.maedler.de in the section Downloads

Technical Note to Chain Tensioners SPANN-BOX® and SPANN-BOY®

Function: These tensioners are powered by linear spiral springs. These elastic tensioners reduce the chain slack and compensate the elongation of chains.

Temperature range: The standard versions are suitable for -20°C to +60°C (short time up to +80°C). Special versions are available on request for temperatures down to -40°C or up to +200°C.

Determination of tensioning force: The tensioners SPANN-BOX® size 0 can be ordered with two different tensioning forces. At SPANN-BOX® size 1 and SPANN-BOY® TS, the tensioning force can get adjusted at different amounts. The weight of the loose chain slack should not be greater than the half of the maximum tensioning force.

Mounting: The tensioner should be placed at the loose chain slack, near by the driving wheel. For low wear-off, several links should be in contact with the chain rider. To reach a sufficient contact angle, it may be useful to mount an idler wheel (e.g. KSP or KSP-R) near by the tensioner. For easy mounting, all tensioners can get locked at maximum tensioning force. After mounting, the tensioners must get unlocked.

Maintenance: At all tensioners, the colored wear-off indicator must be checked periodically. The time of period depends on the operating conditions of the chain drive. When the red marking can be seen, the tensioning force is too low. Then, after locking the tensioner at maximum spring force and loosing the mounting screws, the tensioner can get re-adjusted, closer to the chain. Slot holes allow a re-adjustment in a wide range. When the chain elonguation exceeds 3%, the chain and chain wheels should be replaced. If the chain rider is worn, also the complete tensioner should be replaced.

Chain Tensioners SPANN-BOX® Size 1, for Roller Chains DIN ISO 606 (ex DIN 8187)

Material: Housing from steel, zinc plated, black lackered.
Chain rider from low pressure polyethylene PE-UHMW.
Material Version Stainless: Housing from stainless steel. STAINLESS

These ready-to-install tensioners enable noise reduction and wear reduction at chain drives.

- With three springs. On choice: Two tensioning force versions. At both versions, three different forces can get activated.
- With colored wear-off indicator: Green: o.k. Yellow: still o.k. Red: Tensioning force too low.
- Usable travel up to the end of the yellow range: About 32mm. Total travel about 40mm.
- Interchangeable with similar parts of other suppliers.

Temperature range: -20°C to +60°C (short time up to +80°C).

Ordering Details: e.g.: Product No. 140 403 01, Spann-Box Size 1, Short, Low Force, 06 B-1

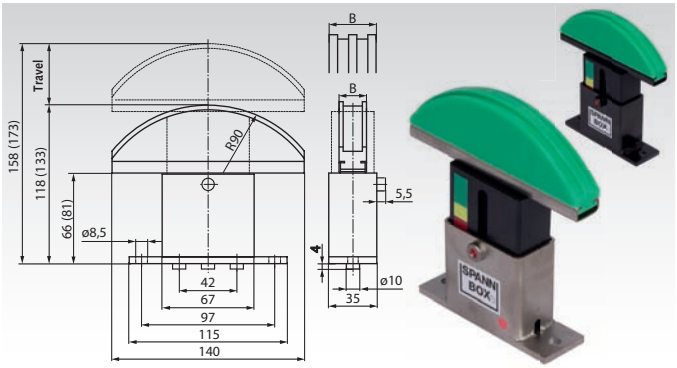

SPANN-BOX® Size 1, Short, Low Force

Product No.	DIN ISO	Pitch Inch	B mm	H mm	Weight g
140 403 01	≤06 B-1	3/8 x 7/32“	20	118	670
140 403 05	08 B-1	1/2 x 5/16“	20	118	670
140 403 06	10 B-1	5/8 x 3/8“	20	118	670
140 403 07	12 B-1	3/4 x 7/16“	20	118	670
140 403 08	16 B-1	1“ x 17,02	20	118	670
140 403 09	20 B-1	1 1/4 x 3/4“	20	118	670
140 403 21	06 B-2	3/8 x 7/32“	20	118	670
140 403 25	08 B-2	1/2 x 5/16“	20	118	670
140 403 26	10 B-2	5/8 x 3/8“	25	118	750
140 403 27	12 B-2	3/4 x 7/16“	30	118	750
140 403 28	16 B-2	1“ x 17,02	45	118	820
140 403 31	06 B-3	3/8 x 7/32“	25	118	740
140 403 35	08 B-3	1/2 x 5/16“	30	118	750
140 403 36	10 B-3	5/8 x 3/8“	40	118	790
140 403 37	12 B-3	3/4 x 7/16“	45	118	810

SPANN-BOX® Size 1, Short, High Force

Product No.	DIN ISO	Pitch Inch	B mm	H mm	Weight g
140 404 01	≤06 B-1	3/8 x 7/32“	20	118	670
140 404 05	08 B-1	1/2 x 5/16“	20	118	670
140 404 06	10 B-1	5/8 x 3/8“	20	118	670
140 404 07	12 B-1	3/4 x 7/16“	20	118	670
140 404 08	16 B-1	1“ x 17,02	20	118	670
140 404 09	20 B-1	1 1/4 x 3/4“	20	118	670
140 404 21	06 B-2	3/8 x 7/32“	20	118	670
140 404 25	08 B-2	1/2 x 5/16“	20	118	670
140 404 26	10 B-2	5/8 x 3/8“	25	118	750
140 404 27	12 B-2	3/4 x 7/16“	30	118	750
140 404 28	16 B-2	1“ x 17,02	45	118	820
140 404 31	06 B-3	3/8 x 7/32“	25	118	740
140 404 35	08 B-3	1/2 x 5/16“	30	118	750
140 404 36	10 B-3	5/8 x 3/8“	40	118	790
140 404 37	12 B-3	3/4 x 7/16“	45	118	810

SPANN-BOX® Size 1, Short, High Force, Stainless

Product No. STAINLESS	DIN ISO	Pitch Inch	B mm	H mm	Weight g
140 405 01	≤06 B-1	3/8 x 7/32“	20	118	670
140 405 05	08 B-1	1/2 x 5/16“	20	118	670
140 405 06	10 B-1	5/8 x 3/8“	20	118	670
140 405 07	12 B-1	3/4 x 7/16“	20	118	670
140 405 08	16 B-1	1“ x 17,02	20	118	670
140 405 09	20 B-1	1 1/4 x 3/4“	20	118	670
140 405 21	06 B-2	3/8 x 7/32“	20	118	670
140 405 25	08 B-2	1/2 x 5/16“	20	118	670
140 405 26	10 B-2	5/8 x 3/8“	25	118	750
140 405 27	12 B-2	3/4 x 7/16“	30	118	750
140 405 28	16 B-2	1“ x 17,02	45	118	820
140 405 31	06 B-3	3/8 x 7/32“	25	118	740
140 405 35	08 B-3	1/2 x 5/16“	30	118	750
140 405 36	10 B-3	5/8 x 3/8“	40	118	790
140 405 37	12 B-3	3/4 x 7/16“	45	118	810

SPANN-BOX® Size 1, Long, High Force

Product No.	DIN ISO	Pitch Inch	B mm	H mm	Weight g
140 406 01	≤06 B-1	3/8 x 7/32“	20	133	740
140 406 05	08 B-1	1/2 x 5/16“	20	133	740
140 406 06	10 B-1	5/8 x 3/8“	20	133	740
140 406 07	12 B-1	3/4 x 7/16“	20	133	740
140 406 08	16 B-1	1“ x 17,02	20	133	740
140 406 09	20 B-1	1 1/4 x 3/4“	20	133	740
140 406 21	06 B-2	3/8 x 7/32“	20	133	810
140 406 25	08 B-2	1/2 x 5/16“	20	133	810
140 406 26	10 B-2	5/8 x 3/8“	25	133	810
140 406 27	12 B-2	3/4 x 7/16“	30	133	810
140 406 28	16 B-2	1“ x 17,02	45	133	890
140 406 31	06 B-3	3/8 x 7/32“	25	133	820
140 406 35	08 B-3	1/2 x 5/16“	30	133	820
140 406 36	10 B-3	5/8 x 3/8“	40	133	820
140 406 37	12 B-3	3/4 x 7/16“	45	133	890

SPANN-BOX® Size 1, Long, High Force, Stainless

Product No. STAINLESS	DIN ISO	Pitch Inch	B mm	H mm	Weight g
140 407 01	≤06 B-1	3/8 x 7/32“	20	133	740
140 407 05	08 B-1	1/2 x 5/16“	20	133	740
140 407 06	10 B-1	5/8 x 3/8“	20	133	740
140 407 07	12 B-1	3/4 x 7/16“	20	133	740
140 407 08	16 B-1	1“ x 17,02	20	133	740
140 407 09	20 B-1	1 1/4 x 3/4“	20	133	740
140 407 21	06 B-2	3/8 x 7/32“	20	133	810
140 407 25	08 B-2	1/2 x 5/16“	20	133	810
140 407 26	10 B-2	5/8 x 3/8“	25	133	810
140 407 27	12 B-2	3/4 x 7/16“	30	133	810
140 407 28	16 B-2	1“ x 17,02	45	133	890
140 407 31	06 B-3	3/8 x 7/32“	25	133	820
140 407 35	08 B-3	1/2 x 5/16“	30	133	820
140 407 36	10 B-3	5/8 x 3/8“	40	133	820
140 407 37	12 B-3	3/4 x 7/16“	45	133	890

Adjustable Tensioning Forces:

On choice, there are two versions, with low tensioning force or with high tensioning force. Both versions have three springs, which can get activated independent from each other to reach three different tensioning forces:

Version with low tensioning force:

1 spring activated: 58 - 32 N.
2 springs activated: 116 - 64 N.
3 springs activated: 174 - 96 N.

Version with high tensioning force:

1 spring activated: 132 - 60 N.
2 springs activated: 264 - 120 N.
3 springs activated: 396 - 180 N.

Operating Instructions at www.maedler.de in the section Downloads

Chain Tensioners SPANN-BOY® TS, for Roller Chains DIN ISO 606 (ex DIN 8187)

Material: Housing from steel, zinc plated, black lackered.
Chain rider from low pressure polyethylene PE-UHMW.
Material Version Stainless: Housing from stainless steel.

These very low, ready-to-install tensioners enable noise reduction and wear reduction at chain drives.

- Needed space below chain only 40mm.
- With two springs of different force, which can get activated separately or together. So it is possible to adjust three different tensioning forces.
- Usable travel about 40mm.
- Interchangeable with similar parts of other suppliers.

Temperature range: -20°C to +60°C (short time up to +80°C).

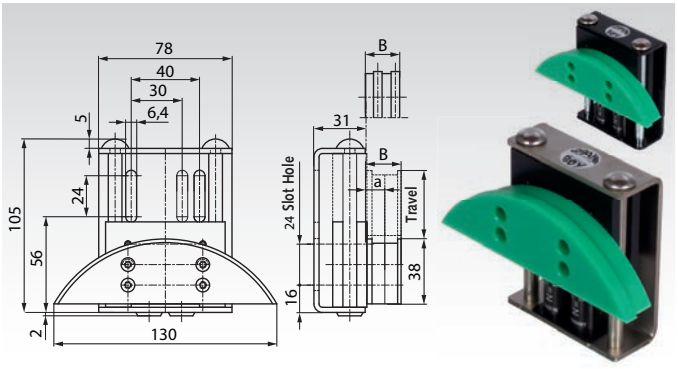

Ordering Details: e.g.: Product No. 140 408 01, Spann-Boy TS, 06 B-1

SPANN-BOY® TS

Product No.	DIN ISO	Pitch Inch	a mm	B mm	Weight g
140 408 01	≤06 B-1	3/8 x 7/32“	10,0	20	460
140 408 05	08 B-1	1/2 x 5/16“	16,5	20	460
140 408 06	10 B-1	5/8 x 3/8“	15,6	20	460
140 408 07	12 B-1	3/4 x 7/16“	14,8	20	460
140 408 21	06 B-2	3/8 x 7/32“	7,5	20	460
140 408 25	08 B-2	1/2 x 5/16“	15,2	32	460
140 408 26	10 B-2	5/8 x 3/8“	11,3	32	500
140 408 30	05 B-3	8mm x 3mm	7,4	20	480
140 408 31	06 B-3	3/8 x 7/32“	9,4	32	480

SPANN-BOY® TS, Stainless

Product No. STAINLESS	DIN ISO	Pitch Inch	a mm	B mm	Weight g
140 409 01	≤06 B-1	3/8 x 7/32“	10,0	20	460
140 409 05	08 B-1	1/2 x 5/16“	16,5	20	460
140 409 06	10 B-1	5/8 x 3/8“	15,6	20	460
140 409 07	12 B-1	3/4 x 7/16“	14,8	20	460
140 409 21	06 B-2	3/8 x 7/32“	7,5	20	460
140 409 25	08 B-2	1/2 x 5/16“	15,2	32	460
140 409 26	10 B-2	5/8 x 3/8“	11,3	32	500
140 409 30	05 B-3	8mm x 3mm	7,4	20	480
140 409 31	06 B-3	3/8 x 7/32“	9,4	32	480

Adjustable Tensioning Forces:

The SPANN-BOY® TS has two different springs: one with low force and one with high force. These springs gan get activated separately or together. So it is possible to adjust three different tensioning forces:

Only the low-force spring activated: 58 - 32 N.
Only the high-force spring activated: 132 - 60 N.
Both springs together activated: 190 - 96 N.

Operating Instructions at www.maedler.de in the section Downloads

Chain Tensioners for Single-Strand Roller Chains DIN ISO 606 (ex DIN 8187)

Material: Housing sintered steel or grey cast iron GG20, lever St52, sprocket made from steel.

This tensioning element, a continually-tensioning torsion element, prolongs the service life of chain and belt drives by at least 30%, and radically reduces maintenance and repair work. The unique operating principle of this spring offers a long tensioning distance, especially as the lever can be pre-tensioned by up to 30° in both directions. The permanent torsion force does not only automatically compensate the chain elongation, the rubber mounted element also dampens vibrations and shocks in the entire drive. Other advantages: chain track adjustable, rubber suspension, adjustable at an angle of 360°, tensioning pressure steplessly adjustable from "normal" to " hard". Can be used for both tensioning directions. Temperature range: -20° to +80°C.

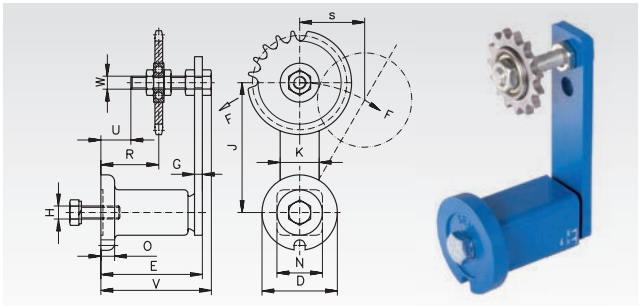

Ordering Details: e.g.: Product No. 140 802 00, Tensioner and 140 501 01, Sprocket

DIN ISO	**Product No.** Tensioning Element	**Product No.** Single Sprocket	No. of Teeth	Pitch Ø mm	max. Tensioning Force N	D mm	E mm	H mm	J mm	N mm	R mm	S max. mm	U mm	V mm	W mm	Weight kg
06 B - 1	**140 802 00**	**140 501 01**	15	45,81	0- 350	58	79 $^{+1,5}_{-0,5}$	M10	100	35	34-55	50	23	85	M10	0,75
081	**140 802 16**	**140 502 01**	18	73,14	0- 350	58	79 $^{+1,5}_{-0,5}$	M10	100	35	40-48	50	23	88	M16	0,95
083	**140 802 16**	**140 503 01**	18	73,14	0- 350	58	79 $^{+1,5}_{-0,5}$	M10	100	35	40-48	50	23	88	M16	0,96
08 B - 1	**140 802 00**	**140 505 01**	15	61,08	0- 350	58	79 $^{+1,5}_{-0,5}$	M10	100	35	34-55	50	23	85	M10	0,80
10 B - 1	**140 803 00**	**140 506 01**	15	76,36	0- 800	78	108 $^{+2}_{-0,5}$	M12	130	52	42-80	65	27	115	M12	2,05
12 B - 1	**140 803 00**	**140 507 01**	15	91,63	0- 800	78	108 $^{+2}_{-0,5}$	M12	130	52	42-80	65	27	115	M12	2,25
16 B - 1	**140 804 00**	**140 508 01**	13	106,14	0- 1500	95	140 $^{+2}_{-0,5}$	M16	175	66	60-100	87,5	40	153	M20	4,80

Chain Tensioners for Double-Strand Roller Chains DIN ISO 606 (ex DIN 8187)

Material: Housing sintered steel or grey cast iron GG20, lever St52, sprocket made from steel.

This tensioning element, a continually-tensioning torsion element, prolongs the service life of chain and belt drives by at least 30%, and radically reduces maintenance and repair work. The unique operating principle of this spring offers a long tensioning distance, especially as the lever can be pre-tensioned by up to 30° in both directions. The permanent torsion force does not only automatically compensate the chain elongation, the rubber mounted element also dampens vibrations and shocks in the entire drive. Other advantages: chain track adjustable, rubber suspension, adjustable at an angle of 360°, tensioning pressure steplessly adjustable from "normal" to " hard". Can be used for both tensioning directions. Temperature range: -20° to +80°C.

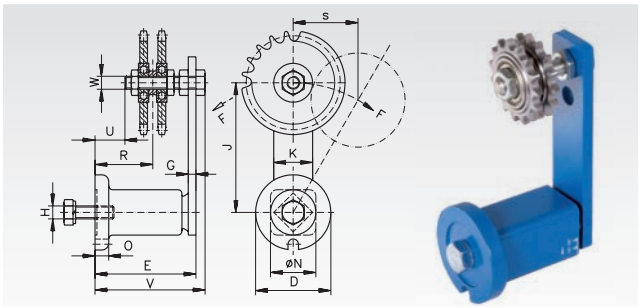

Ordering Details: e.g.: Product No. 140 802 00, Tensioner and 140 521 01, Sprocket

DIN ISO	**Product No.** Tensioning Element	**Product No.** Double Sprocket	No. of Teeth	Pitch Ø mm	max. Tensioning Force N	D mm	E mm	H mm	J mm	N mm	R mm	S max. mm	U mm	V mm	W mm	Weight kg
06 B - 2	**140 802 00**	**140 521 01**	15	45,81	0- 350	58	79 $^{+1,5}_{-0,5}$	M10	100	35	39-50	50	23	85	M10	0,80
08 B - 2	**140 802 00**	**140 525 01**	15	61,08	0- 350	58	79 $^{+1,5}_{-0,5}$	M10	100	35	41-48	50	23	85	M10	0,80
10 B - 2	**140 803 00**	**140 526 01**	15	76,36	0- 800	78	108 $^{+2}_{-0,5}$	M12	130	52	50-71	65	27	115	M12	2,30
12 B - 2	**140 803 00**	**140 527 01**	15	91,63	0- 800	78	108 $^{+2}_{-0,5}$	M12	130	52	51-70	65	27	115	M12	2,75
16 B - 2	**140 804 00**	**140 528 01**	13	106,14	0- 1500	95	140 $^{+2}_{-0,5}$	M16	175	66	56-85	87,5	20	153	M20	5,65

Chain Tensioners for Triple-Strand Roller Chains DIN ISO 606 (ex DIN 8187)

Material: Housing sintered steel or grey cast iron GG20, lever St52, sprocket made from steel.

This tensioning element, a continually-tensioning torsion element, prolongs the service life of chain and belt drives by at least 30%, and radically reduces maintenance and repair work. The unique operating principle of this spring offers a long tensioning distance, especially as the lever can be pre-tensioned by up to 30° in both directions. The permanent torsion force does not only automatically compensate the chain elongation, the rubber mounted element also dampens vibrations and shocks in the entire drive. Other advantages: chain track adjustable, rubber suspension, adjustable at an angle of 360°, tensioning pressure steplessly adjustable from "normal" to " hard". Can be used for both tensioning directions. Temperature range: -20° to +80°C.

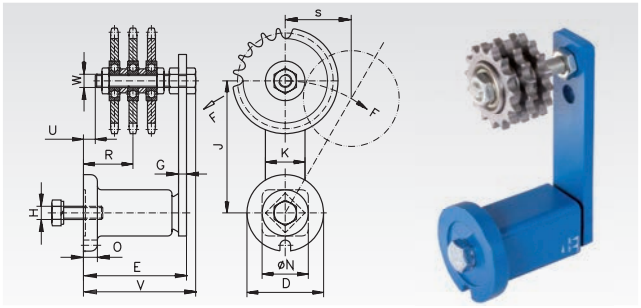

Ordering Details: e.g.: Product No. 140 802 00, Tensioner and 140 531 01, Sprocket

DIN ISO	**Product No.** Tensioning Element	**Product No.** Triple Sprocket	No. of Teeth	Pitch Ø mm	max. Tensioning Force N	D mm	E mm	H mm	J mm	N mm	R mm	S max. mm	U mm	V mm	W mm	Weight kg
06 B - 3	**140 802 00**	**140 531 01**	15	45,81	0- 350	58	79 $^{+1,5}_{-0,5}$	M10	100	35	25-45	50	6	85	M10	0,90
08 B - 3	**140 802 12**	**140 535 01**	15	61,08	0- 350	58	79 $^{+1,5}_{-0,5}$	M10	100	35	23-47	50	6	85	M12	0,90
10 B - 3	**140 803 00**	**140 536 01**	15	76,36	0- 800	78	108 $^{+2}_{-0,5}$	M12	130	52	40-64	65	15	115	M12	3,25
12 B - 3	**140 804 00**	**140 537 01**	15	91,63	0- 1500	95	140 $^{+2}_{-0,5}$	M16	175	66	56-80	87,5	30	153	M20	6,50

Sprocket Sets for Chain Tensioners Single

Material: Steel St40/50. Screw zinc-plated steel.

The sprocket can be moved on the screw and thus be aligned with the chain. It is locked in the desired position with the nuts. The permanently lubricated 2-Z bearings are sealed on both sides and guarantee perfect running of the sprocket.

Temperature range: -20° to +120°C.

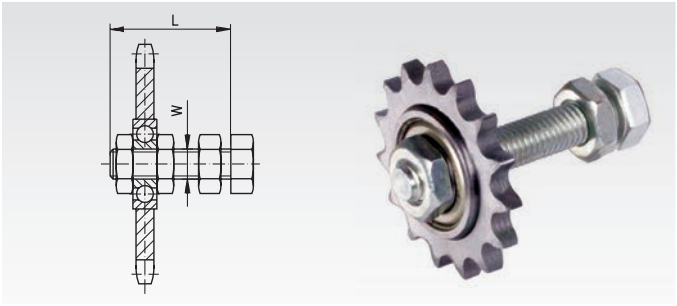

Ordering Details: e.g.: Product No. 140 501 01, Sprocket Set for Chain Tensioner Size 1

Product No.	Matching Tensioning Element Size	DIN ISO	No. of Teeth	Pitch Ø mm	L mm	W mm	Weight kg
140 501 01	1 and 2	06 B - 1	15	45,81	55	M10	0,08
140 502 01*	1[1] and 2[2]	081	18	73,14	55	M16[3]	0,19
140 503 01*	1[1] and 2[2]	083	18	73,14	55	M16[3]	0,21
140 505 01	1 and 2	08 B - 1	15	61,08	55	M10	0,20
140 506 01	3	10 B - 1	15	76,36	80	M12	0,30
140 507 01	3	12 B - 1	15	91,63	80	M12	0,51
140 508 01	4	16 B - 1	13	106,14	100	M20	0,95

[1] Tensioning element bore needs to be drilled out. [2] Matching Product No. 140 802 16. [3] With special ball bearing, length of inner ring 18.3mm.

Sprocket Sets for Chain Tensioners, Double

Material: Steel St40/50. Screw zinc-plated steel.

The sprocket can be moved on the screw and thus be aligned with the chain. It is locked in the desired position with the nuts. The permanently lubricated 2-Z bearings are sealed on both sides and guarantee perfect running of the sprocket.

Accurate-to-size spacers guarantee perfect meshing of teeth and sprocket.

Temperature range: -20° to +120°C.

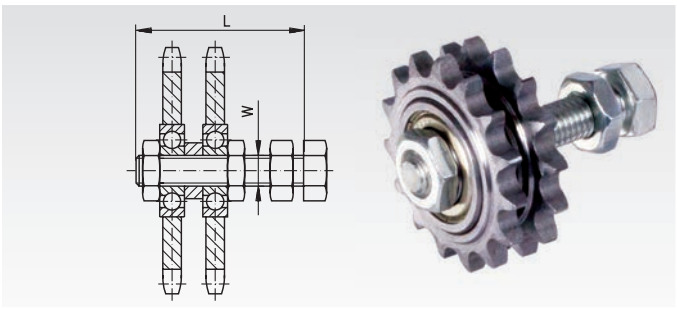

Ordering Details: e.g.: Product No. 140 521 01, Sprocket Set for Chain Tensioner Size 1

Product No.	Matching Tensioning Element Size	DIN ISO	No. of Teeth	Pitch Ø mm	L mm	W mm	Weight kg
140 521 01	1 and 2	06 B - 2	15	45,81	55	M10	0,15
140 525 01	1 and 2	08 B - 2	15	61,08	70	M10	0,40
140 526 01	3	10 B - 2	15	76,36	80	M12	0,60
140 527 01	3	12 B - 2	15	91,63	80	M12	1,00
140 528 01	4	16 B - 2	13	106,14	120	M20	1,90

Sprocket Sets for Chain Tensioners, Triple

Material: Steel St40/50. Screw zinc-plated steel.

The sprocket can be moved on the screw and thus be aligned with the chain. It is locked in the desired position with the nuts. The permanently lubricated 2-Z bearings are sealed on both sides and guarantee perfect running of the sprocket.

Accurate-to-size spacers guarantee perfect meshing of teeth and sprocket.

Temperature range: -20° to +120°C.

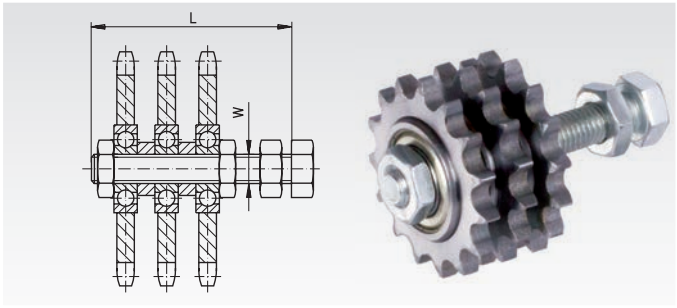

Ordering Details: e.g.: Product No. 140 531 01, Sprocket Set for Chain Tensioner Size 2

Product No.	Matching Tensioning Element Size	DIN ISO	No. of Teeth	Pitch Ø mm	L mm	W mm	Weight kg
140 531 01	2	06 B - 3	15	45,81	70	M10	0,25
140 535 01	2* and 3	08 B - 3	15	61,08	80	M12	0,50
140 536 01	3	10 B - 3	15	76,36	80	M12	0,95
140 537 01	4	12 B - 3	15	91,63	120	M20	1,50

* Matching tensioning element Product No. 140 802 12.

Chain Rider Sets

Material: Plastic POM. Screw zinc-plated steel.

To be mounted on the suitable tensioning element to create a ready-to-mount, cost-efficient chain tensioner. The shape of the rider, made from high-grade, friction resistant, industrial plastic, means the rider can be used on both rider sides and the large radius guarantees quiet operation. The maximum chain speed must not exceed 1.5 m/sec. Temperature range: -20° to +80°C.

Tensioning Element has to be ordered separately.

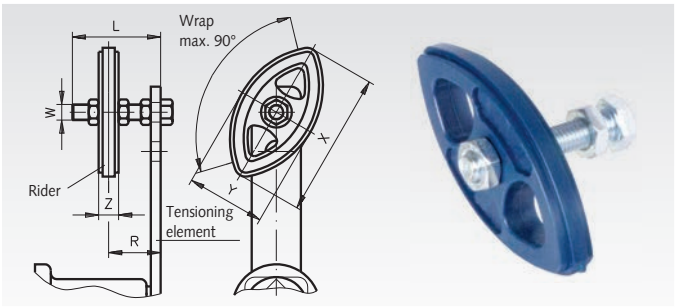

Ordering Details: e.g.: Product No. 140 851 00 Chain Rider Set 06 B-1

Product No.	Suitable for Tensioning Element Size	DIN ISO	W mm	L mm	X mm	Y mm	Z mm	Adjustment Range R mm	Weight kg
140 851 00	0	06 B - 1	M8	45	74	40	10,2	19 - 34	0,05
140 855 00	1	08 B - 1	M10	55	96	50	13,9	23 - 41	0,10
140 856 00	2	10 B - 1	M10	55	126	65	16,6	24 - 39	0,12
140 857 00	3	12 B - 1	M12	80	148	74	19,5	30 - 61	0,18

Tensioning Elements in Standard Version

Material: Housing up to Ø 78 mm made from sintered steel, over Ø 78 mm made from grey cast iron GG20, lever made from St52.
Can be used for tensioning all common kinds of chain and belt drives. The elastomeric inserts are based on highly-elastic natural rubber with a good shape memory and are designed for applications in temperatures from -40° to +80°C
The tensioning elements are painted blue and supplied with a zinc-plated screw and spring washer. Can be used for both tensioning directions. Temperature range: -40° to +80°C.

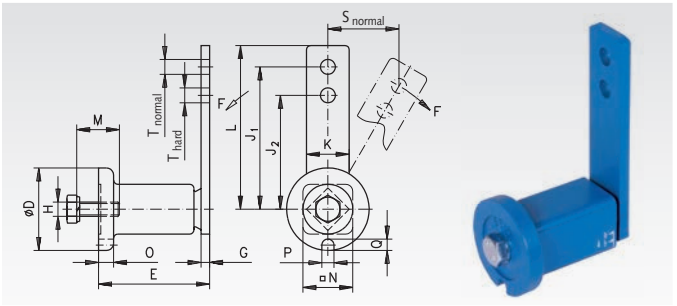

Ordering Details: e.g.: Product No. 140 800 00, Tensioning Element Ø 35 mm

Product No.	Size	F max. normal N	F max. hard N	s max. normal mm	s max. hard mm	D mm	E mm	G mm	H mm	J_1 mm	J_2 mm	K mm	L mm	M mm	N mm	O mm	P mm	Q mm	T mm	M_A Nm	Weight kg
140 800 00	0	80	106	40	30	35	51 $^{+1,0}_{-0,5}$	5	M6	80	60	20	90	20	22	6	8	5	8,5	10	0,2
140 801 00	1	135	168	50	40	45	64 $^{+1,0}_{-0,5}$	5	M8	100	80	25	112,5	25	30	8	8,5	6	10,5	25	0,4
140 802 00	2	350	437	50	40	58	79 $^{+1,5}_{-0,5}$	7	M10	100	80	30	115	30	35	10,5	8,5	8	10,5	49	0,6
140 802 12	2	350	437	50	40	58	79 $^{+1,5}_{-0,5}$	7	M10	100	80	30	115	30	35	10,5	8,5	8	12	49	0,6
140 802 16	2	350	437	50	40	58	79 $^{+1,5}_{-0,5}$	7	M10	100	80	30	115	30	35	10,5	8,5	8	16	49	0,6
140 803 00	3	800	1040	65	50	78	108 $^{+2}_{-0,5}$	8	M12	130	100	50	155	40	52	15	10,5	10	12,5	86	1,7
140 804 00	4	1500	1875	87,5	70	95	140 $^{+2}_{-0,5}$	10	M16	175	140	60	205	40	66	15	12,5	12	20,5	210	3,55

Tensioning Elements, Zinc Plated and Oil Resistant

Material: Casing made from sintered steel or grey cast iron GG20, lever made from St52.

The design of these tensioning elements is identical to the standard version, but they are zinc plated and the synthetic spring elements are resistant to mineral oils. These components are especially suited for "outdoor" applications, e.g. for construction machinery or for use inside the oilbath of a gearbox. The tensioning elements are marked with a yellow dot on the lever. Can be used for both tensioning directions.
Temperature range: -30° to +90°C.

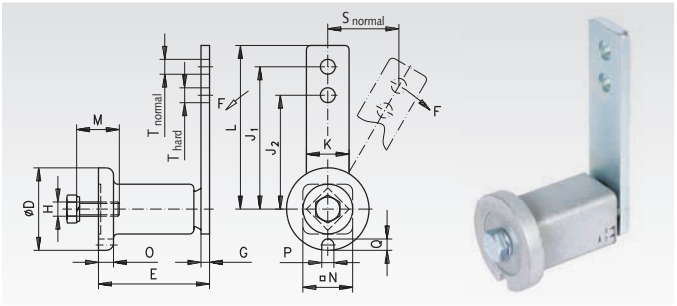

Ordering Details: e.g.: Product No. 140 800 03, Tensioning Element Ø 35 mm

Product No.	Size	F max. normal N	F max. hard N	s max. normal mm	s max. hard mm	D mm	E mm	G mm	H mm	J_1 mm	J_2 mm	K mm	L mm	M mm	N mm	O mm	P mm	Q mm	T mm	M_A Nm	Weight kg
140 800 03	0	80	106	40	30	35	51 $^{+1,0}_{-0,5}$	5	M6	80	60	20	90	20	22	6	8	5	8,5	10	0,2
140 801 03	1	135	168	50	40	45	64 $^{+1,0}_{-0,5}$	5	M8	100	80	25	112,5	25	30	8	8,5	6	10,5	25	0,4
140 802 03	2	350	437	50	40	58	79 $^{+1,5}_{-0,5}$	7	M10	100	80	30	115	30	35	10,5	8,5	8	10,5	49	0,6
140 803 03	3	800	1040	65	50	78	108 $^{+2}_{-0,5}$	8	M12	130	100	50	155	40	52	15	10,5	10	12,5	86	1,7
140 804 03	4	1500	1875	87,5	70	95	140 $^{+2}_{-0,5}$	10	M16	175	140	60	205	40	66	15	12,5	12	20,5	210	3,55

Tensioning Elements with Front Mounting

Material: Housing up to Ø 78 mm made from sintered steel, over Ø 78 mm made from grey cast iron GG20, lever made from St52.

These tensioning elements are in general identical to the standard version. For easier mounting they are fixed from the lever side using an in-and-out screw. A thread has to be cut in the machine housing. The supplied screw is secured for transport with an O-Ring. Can be used for both tensioning directions.
Temperature range: -40° to +80°C.

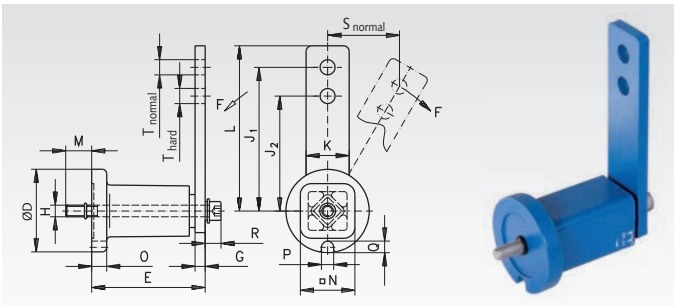

Ordering Details: e.g.: Product No. 140 801 07, Tensioning Element Ø 45 mm

Product No.	Size	F max. normal N	F max. hard N	s max. normal mm	s max. hard mm	D mm	E mm	G mm	H mm	J_1 mm	J_2 mm	K mm	L mm	M mm	N mm	O mm	P mm	Q mm	R mm	T mm	M_A Nm	Weight kg
140 801 07	1	135	168	50	40	45	$64^{+1,0}_{-0,5}$	5	M6	100	80	25	113	12,4	30	8	8,5	6	10	10,5	17	0,4
140 802 07	2	350	437	50	40	58	$79^{+1,5}_{-0,5}$	7	M8	100	80	30	115	18,9	35	10,5	8,5	8	12	10,5	41	0,65
140 803 07	3	800	1040	65	50	78	$108^{+2}_{-0,5}$	8	M10	130	100	50	155	17,5	52	15	11	10	16	12,5	83	1,85
140 804 07	4	1500	1875	87,5	70	95	$140^{+2}_{-0,5}$	10	M12	175	140	60	205	18,0	66	15	13	12	19	20,5	145	3,70

Tensioning Elements Stainless

Material: Stainless steel 1.4301 or 1.4308.

The design of this tensioning element is identical to the standard version.
Temperature range: -40° to +80°C.

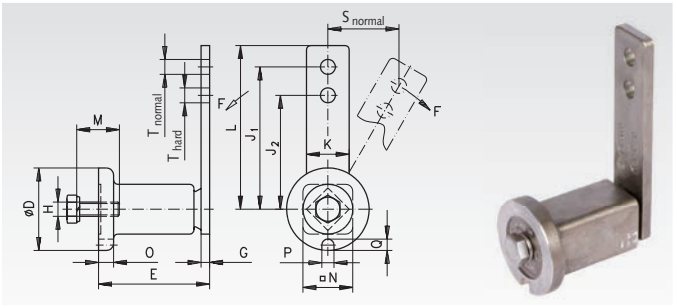

Ordering Details: e.g.: Product No. 140 998 01, Tensioning Element Ø 45 mm

Product No	Size	F max. normal N	F max. hard N	s max. normal mm	s max. hard mm	D mm	E mm	G mm	H mm	J_1 mm	J_2 mm	K mm	L mm	M mm	N mm	O mm	P mm	Q mm	T mm	M_A Nm	Weight kg
140 998 01	1	150	187,5	50	40	45	$64^{+1,0}_{-0,5}$	5	M8	100	80	25	112,5	25	30	8	8,5	6	10,5	25	0,35
140 998 02	2	400	500	50	40	58	$79^{+1,5}_{-0,5}$	7	M10	100	80	30	115	30	35	10,5	8,5	8	10,5	49	0,70
140 998 03	3	860	1118	65	50	78	$108^{+2}_{-0,5}$	8	M12	130	100	50	155	40	52	15	10,5	10	12,5	86	1,90
140 998 04	4	1500	1875	87,5	70	100	$140^{+2}_{-0,5}$	10	M16	175	140	70	205	40	70	15	12,5	12	20,5	210	4,30

Tensioning Elements „Boomerang“

Material: Housing sintered steel, lever St52.

These tensioning elements are used to compensate the slack in extremely long chain drives. The slack length passes in an S-shape through the supplied sprockets or pulleys so that the lever works as a compensator. This system thus offers a triple compensation of the slack compared to standard tensioners.
Temperature range: -40° to +80°C.

Application example:

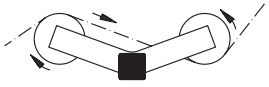

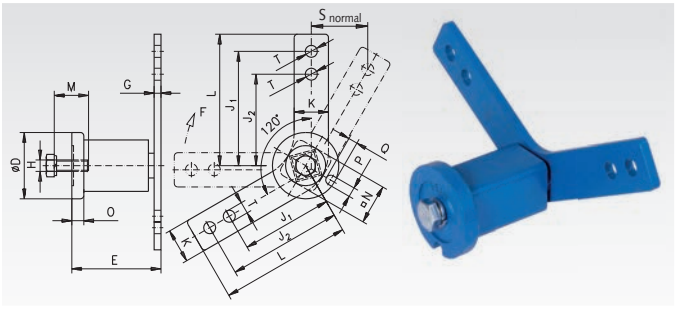

Ordering Details: e.g.: Product No. 140 802 09, Tensioning Element Ø 58 mm

Product No.	Size	F max. normal N	F max. hard N	s max. normal mm	s max. hard mm	D mm	E mm	G mm	H mm	J_1 mm	J_2 mm	K mm	L mm	M mm	N mm	O mm	P mm	Q mm	T mm	M_A Nm	Weight kg
140 802 09	2	175	215	50	40	58	$79^{+1,5}_{-0,5}$	6	M10	100	80	30	115	30	35	10,5	8,5	8	10,5	49	0,75
140 803 09	3	400	520	65	50	78	$108^{+2}_{-0,5}$	8	M12	130	100	50	155	40	52	15	11	10	12,5	86	2,10

www.maedler.de

...the entire MÄDLER® range with CAD files on the Internet

We present the entire ***MÄDLER***® range with CAD files and ***MÄDLER***® info, continuously updated, on the internet. Fast access to the data, fast ordering by internet.
Orders by internet, phone, fax or e-mail: We guarantee delivery at short notice.





Dimensions and other information in this catalogue display the current state of technology. We reserve the right for changes.
This catalogue was created with due diligence, but errors might still occur. We refuse to accept any claims in this respect. We reserve the right to alter dimensions, and to change or remove single products and product groups without prior notice. Our general conditions of sales, delivery and payment can be found on the last page of this catalogue.

...we keep things moving

Round-Link Steel Chains DIN 766 A, zinc-plated

Material: High-quality steel in accordance with DIN 17115, zinc plated

Short links, true to gauge, certified. Quality class 3. High-quality steel in accordance with DIN 17115. Surface, zinc plated

Stock lengths available, max 30 m.

Matching sprockets and chain rollers, see page 120.

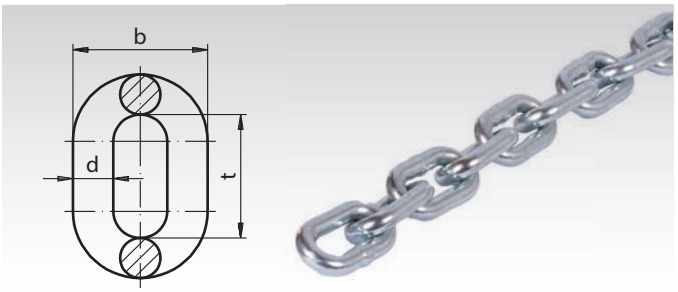

Ordering Details: e.g.: Product No. 770 104 00, Round-Link Steel Chain 4 mm, DIN 766A.

Product No.	d mm	t mm	b mm	Work load* approx.N	Minimum breaking load N	Weight kg/m
770 104 00	4	16	14	2000	8000	0,32
770 105 00	5	18,5	17	3200	12000	0,5
770 106 00	6	18,5	20	4000	16000	0,75
770 108 00	8	24	26	8000	32000	1,35
770 110 00	10	28	34	12000	50000	2,25

* At chain speeds up to 1 m/s.

Round-Link Steel Chains similar to DIN 766 A, Stainless

Material: Stainless steel 1.4401.

Short links, true to gauge, certified, as per DIN 766 A Quality Class 3.

Stock lengths available, max 30 m.

Matching sprockets and chain rollers, see page 120.

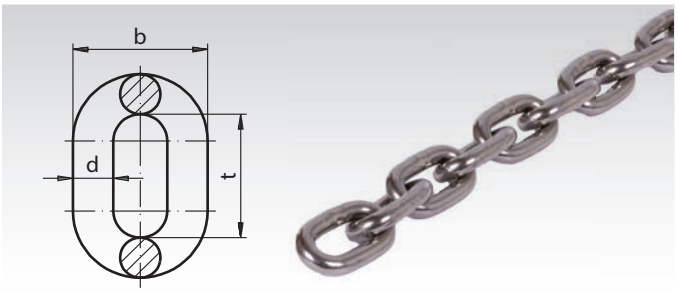

Ordering Details: e.g.: Product No. 770 990 04, Round-Link Steel Chain 4 mm, Stainless.

Product No.	d mm	t mm	b mm	Work load* approx.N	Minimum breaking load N	Weight kg/m
770 990 04	4	16	14	2000	8000	0,32
770 990 05	5	18,5	17	3200	12000	0,5
770 990 06	6	18,5	20	4000	16000	0,75
770 990 08	8	24	26	8000	32000	1,35
770 990 10	10	28	34	12000	40000	2,25

* At chain speeds up to 1 m/s.

Spare Chain Links RN

Material: Steel, zinc plated or stainless steel 1.4401.

Chain links consisting of two parts that have to be riveted together. Precisely drop-forged and deburred, ready-to-use, matching chain DIN 766. One part is placed on top of the other, and then both parts are pressed together. These spare chain links cannot be used for continuous operation under load.

Matching sprockets and chain rollers, see page 120.

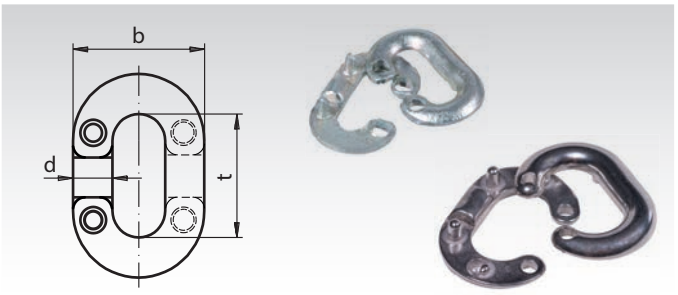

Ordering Details: e.g.: Product No. 770 135 00, Spare Chain Link RN 5 mm.

Product No. Steel zinc-plated	Size	d ≈ mm	t ≈ mm	b ≈ mm	Weigth g	Product No. Stainless Steel	Size	d ≈ mm	t ≈ mm	b ≈ mm	Weight g
770 135 00	5	5,2	18,2	17	8	**770 991 35**	5	5,0	17,5	19,0	8
770 136 00	6	6	18,2	20	14	**770 991 36**	6	5,7	21,7	22,5	14
770 138 00	8	8	24	26	40	**770 991 38**	8	7,5	24,8	28,0	30
770 140 00	10	10	28	34	64	**770 991 40**	10	9,2	29,5	34,5	54

Chain Wheels without Teeth (Chain Rollers)

Material: Grey cast iron GG25.

Matching chains in accordance with DIN 766 A.
Hub unfinished and without bore, some with core hole.

All dimensions and weights „ca.“.

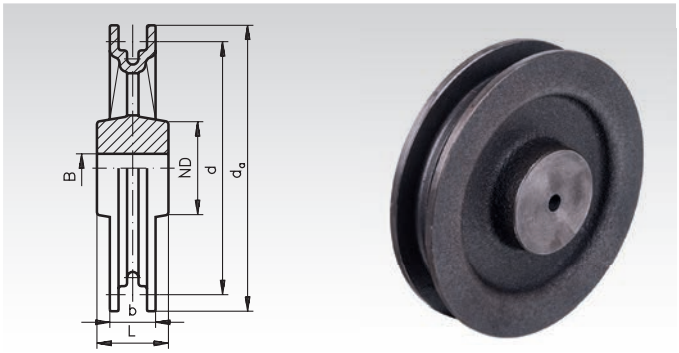

Ordering Details: e.g.: Art.No. 770 404 00, Chain Wheel, d_a= 56 mm, 4 mm

Chain Width 4 mm, Pitch 16 mm

Product No.	d_a mm	d mm	b mm	ND mm	L mm	B approx. mm	Weight kg
770 404 00	56	41	23	40	30	8	0,3
770 408 00	96	81	23	50	35	8	1,0

Chain Width 5 and 6 mm, Pitch 18.5 mm

Product No.	d_a mm	d mm	b mm	ND mm	L mm	B approx. mm	Weight kg
770 506 00	95	71	32	50	50	8	1,2
770 508 00	120	94	32	50	50	8	2,0
770 512 00	165	141	34	60	50	10	3,2
770 515 00	200	177	32	65	50	12	3,2

Chain Width 8 mm, Pitch 24 mm

Product No.	d_a mm	d mm	b mm	ND mm	L mm	B approx. mm	Weight kg
770 607 00	117	107	41	80	65	10	3,0
770 608 00	162	122	45	80	65	12	5,0
770 612 00	212	183	45	80	65	20	6,0

Chain Width 10 mm, Pitch 28 mm

Product No.	d_a mm	d mm	b mm	ND mm	L mm	B approx. mm	Weight kg
770 705 00	115	89	56	60	65	10	3,0
770 712 00	250	214	52	140	75	20	13,0

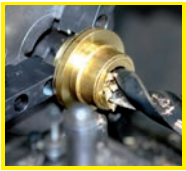

Reworking within 24h-service possible. Custom made parts on request.

Chain Wheels with Teeth (Hasp Wheels)

Material: Grey cast iron GG25.

Matching chains in accordance with DIN 766 A.
Teeth cast, hub unfinished and without bore, some with core hole.

All dimensions and weights „ca.“.

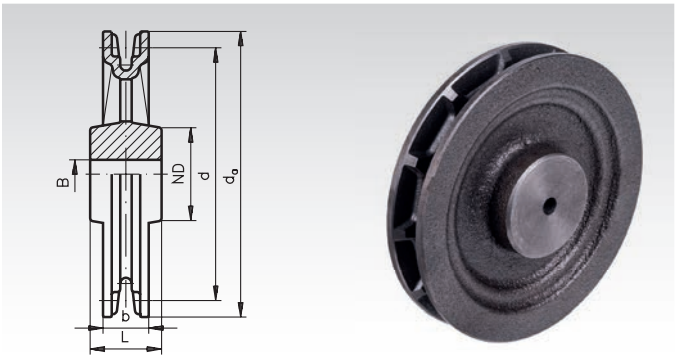

Ordering Details: e.g.: Product No. 771 104 00, Hasp Wheel, 4 teeth, 4 mm

Chain Width 4 mm, Pitch 16 mm

Product No.	Number of teeth	d_a mm	d mm	b mm	ND mm	L mm	B approx. mm	Weight kg
771 104 00	4	56	41	24	40	30	8	0,3
771 108 00	8	96	81	28	50	35	8	1,0
771 112 00	12	140	122	25	50	40	8	1,5
771 115 00	15	165	153	24	50	40	8	2,4
771 118 00	18	200	183	26	50	40	10	2,6

Chain Width 5 and 6 mm, Pitch 18.5 mm

Product No.	Number of teeth	d_a mm	d mm	b mm	ND mm	L mm	B approx. mm	Weight kg
771 206 00	6	95	71	32	50	50	8	1,2
771 207 00	7	110	82	34	60	50	8	1,9
771 208 00	8	120	94	32	50	50	8	2,0
771 210 00	10	135	118	32	60	50	10	2,4
771 212 00	12	165	141	33	60	50	10	3,2
771 214 00	14	185	165	32	65	50	12	4,3
771 215 00	15	200	177	32	65	50	12	3,2
771 216 00	16	215	188	31	65	50	15	3,8
771 218 00	18	235	212	35	60	50	15	5,0
771 220 00	20	260	236	33	60	50	20	5,0
771 224 00	24	300	283	33	60	50	20	5,5
771 226 00	26	335	306	37	70	60	25	7,5
771 230 00	30	380	353	35	70	60	25	9,0
771 236 00	36	450	424	35	90	85	25	12,0
771 240 00	40	500	470	39	100	75	25	17,0
771 250 00	50	620	589	41	100	75	25	27,0

Chain Width 8 mm, Pitch 24 mm

Product No.	Number of teeth	d_a mm	d mm	b mm	ND mm	L mm	B approx. mm	Weight kg
771 406 00	6	115	92	45	80	65	10	3,0
771 408 00	8	162	122	45	80	65	12	4,6
771 410 00	10	180	153	45	80	65	20	5,0
771 412 00	12	212	183	45	80	65	20	6,0
771 414 00	14	245	214	45	80	65	20	7,5
771 418 00	18	305	275	46	90	70	20	12,0
771 424 00	24	390	367	46	120	70	25	15,0

Chain Width 10 mm, Pitch 28 mm

Product No.	Number of teeth	d_a mm	d mm	b mm	ND mm	L mm	B approx. mm	Weight kg
771 605 00	5	115	89	56	60	65	10	3,0
771 608 00	8	170	140	50	80	70	20	6,5
771 612 00	12	250	214	52	140	75	20	13,0



Reworking within 24h-service possible. Custom made parts on request.

Idlers 712 AV Made from Cast Iron with One-Sided Flange

Material: Grey cast iron GG20, zinc-plated.

Flange and running surface precisely turned, running surface inclined at 3° towards the axle, wheel mounting optionally with plain or roller bearing. As standard the roller bearings are sealed with Z-plates (all dimensions and weights „ca.“).

Temperature range:
with plain bearing: -30°C to +180°C.
with ball bearing: -30°C to +90°C (for short time up to +110°C).

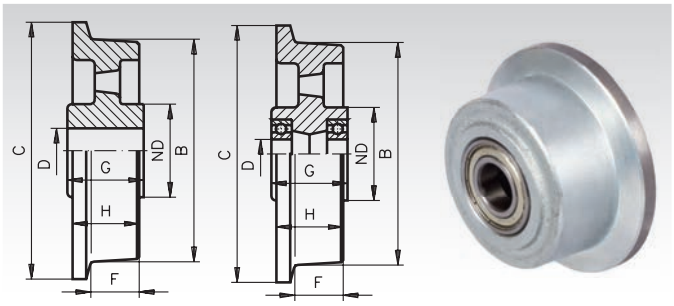

Ordering Details: e.g.: Product No. 775 005 00, Idler 712 V as Plain Bearing, Wheel Ø 50 o.S.

Version with Plain Bearing (Dimensions in mm)

Product No.	Wheel Ø without Flange B	Wheel Ø with Flange C	Wheel Width with Flange H	Running Surface F	Hub Length symmetric G	Hub-Ø ND	Bore Ø D	Load Bearing Capacity approx. daN	Weight kg
775 005 00	50	62	32	26	-	-	$15^{+0,2}$	400	0,6
775 007 00	75	100	40	30	47	40	$20^{+0,2}$	800	1,3
775 010 00	100	125	46	36	52	45	$20^{+0,2}$	1000	2,3
775 012 00	125	145	46	36	52	45	$20^{+0,2}$	1000	2,7
775 015 00	150	175	46	36	52	62	$20^{+0,2}$	1000	3,5
775 018 00	180	210	47	36	52	65	$30^{+0,2}$	1200	4,7
775 020 00	200	230	56	38	60	90	$30^{+0,2}$	1500	7,7
775 025 00	250	300	65	50	70	90	$40^{+0,2}$	2000	13,5

Version with Ball Bearing (Dimensions in mm)

Product No.	Wheel Ø without Flange B	Wheel Ø with Flange C	Wheel Width with Flange H	Running Surface F	Hub Length symmetric G	Hub-Ø ND	Bore Ø D	Load Bearing Capacity approx. daN	Weight kg
775 207 00	75	100	40	30	47	54	20	800	1,3
775 210 00	100	125	46	36	52	62	20	1000	2,4
775 212 00	125	145	46	36	52	62	20	1000	2,8
775 215 00	150	175	46	36	52	62	20	1000	3,5
775 218 00	180	210	47	36	52	65	20	1200	4,7
775 220 00	200	230	56	38	60	90	25	1500	7,7
775 225 00	250	300	65	50	70	90	30	2000	12,8

Idlers Made from Polyamide with One-Sided Flange

This Polyamide grade has a high abrasion resistance with low friction coefficient, is self lubricating and can thus, at low speeds, easily be used as plain bearing.

Temperature range: -40°C to +80°C.
Above +35°C, the load has to be reduced. At the max. temperature, the max. load capacity is only 40 to 50% of the load shown in the table.

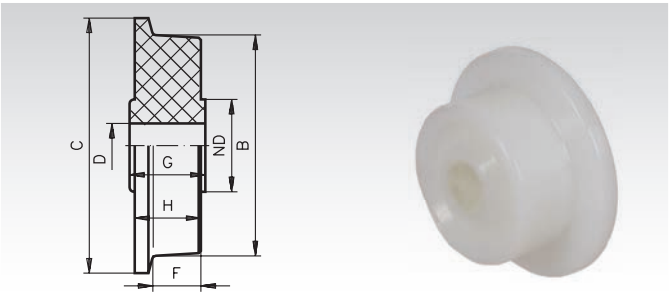

Ordering Details: e.g.: Product No. 775 405 00, Idler Polyamide, Wheel Ø 50

Runner Wheels Made from Polyamide (dimensions in mm)

Product No.	Wheel Ø without Flange B	Wheel Ø with Flange C	Wheel Width with Flange H	Running Surface F	Hub Length symmetric G	Hub-Ø ND	Bore Ø D	Load Bearing Capacity approx. daN	Weight kg
775 405 00	50	70	30	20	30	-	16	100	0,065
775 406 00	62	80	26	18	30	35	16	100	0,090
775 409 00	87	108	32	25	32	-	16	200	0,220
775 410 00	100	120	45	32	40	50	20	280	0,360

Note Regarding Polyamide Wheels

Inside these die-cast parts are some cavities caused by production. These parts should therefore not be drilled too deep. With larger bores or when grooving the cavities might become visible. This often does not affect the functionality.

Idlers Made from Steel (C45) with Flange on Both Sides

Especially suited for heavy-duty applications, e.g. electrically controlled gates.
Precisely turned from solid material; with fully sealed precision bearings.
Product No. 776 004 00 and 776 005 00 with square running surface and single bearing, wheel body burnished.
Product No. 776 006 00 to 776 016 00 with convex running surface and double bearing.
Delivery includes all mounting material needed; axle bolt at running surface Ø 35 and 45 mm with external thread, serrated washer and hexagon nuts, other sizes with internal thread, 6 hexagon screws and washers DIN ISO 7093-1.

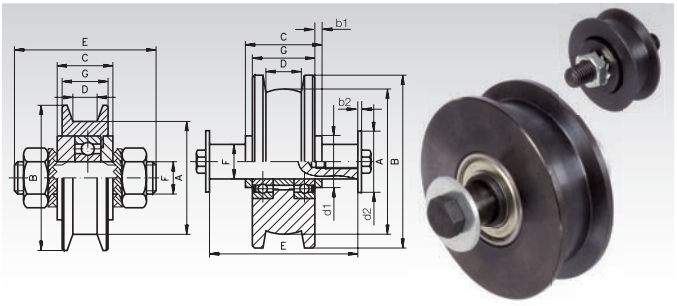

Ordering Details: e.g.: Product No. 776 004 00, Idler, St. A 35

Product No.	A mm	B mm	G mm	C mm	D mm	E mm	F mm	Wheel Load* max. kg	Weight kg	Recommended Rail**
776 004 00	35	45	17	20	10,3	50	10	160	0,18	□ 40 x 10
776 005 00	45	55	19	24	12,3	65	12	250	0,32	□ 50 x 12
776 006 00	63	75	27	33	15,3	68	15	480	0,75	□ 60 x 15
776 008 00	84	100	34	40	20,3	80	20	840	1,5	□ 60 x 20
776 010 00	100	125	40	46	25,0	96	25	960	3,35	Narrow- S 7
776 013 00	130	160	52	58	32	120	30	1360	4,6	Gauge Rail S 10
776 016 00	164	200	64	70	38	140	35	1800	8,8	DIN 5901 S 14

* The wheel loads stated are derived from the dimensions and temperatures listed in the roller bearing catalogues. For product No. 776 004 00 and 776 005 00 these values are valid at a maximum operating temperature of 90°C; for higher continuous temperatures, please inquire first.
** Not part of our stock. Please inquire at your steel supplier.

Wheel Sizes and Mounting Elements

Product No. Idler	d_1 mm	b_1 mm	d_2 mm	b_2 mm	Mounting Elements
776 004 00	-	-	-	-	Flat Nut M10 with Lock Washer
776 005 00	-	-	-	-	Flat Nut M12 with Lock Washer
776 006 00	20	3	30	2.5	Hexagon Screw M10 x 16 mm
776 008 00	26	3	37	3.0	Hexagon Screw M12 x 16 mm
776 010 00	32	3	37	3.0	Hexagon Screw M12 x 16 mm
776 013 00	38	3	50	3.0	Hexagon Screw M16 x 20 mm
776 016 00	45	3	60	4.0	Hexagon Screw M20 x 25 mm



Reworking within 24h-service possible. Custom made parts on request.

Travel-Wheel Systems RB/I

Material: Housing made from spheroidal graphite cast iron, painted gray. Travel wheel made from GG 70, with high-quality roller bearing.

Version G: With cast iron travel wheel with two flanges, with high load capacity, to be used on rails.

Version K: With cast iron travel wheel with PUR-bandage (Polyurethane-Elastomer), for higher traction at low operating noise.

A very robust, universal, maintenance-free travel wheel system available in two sizes. It is designed for various travel applications with wheel loads up to 3.5 t and travel speeds up to 240 m/min (depending on version and load). The five connection surfaces are machined and provide for a multitude of connection variants.
4 screws for inverted mounting are supplied. The housing is painted gray (RAL 7001) and can be repainted.

The travel-wheel systems can be combined with the geared motors RBM/I to form a compact drive unit.

Temperature range: -20°C to +60°C.

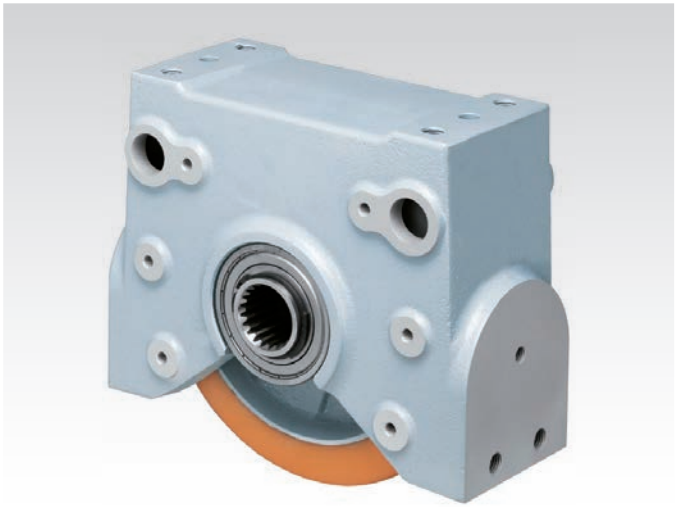

Ordering Details: e.g.: Product No., Type, Size, Version

Product No.	Size	Version	Load Bearing Capacity up to 100 m/min kg	R* at Speed 240 m/min kg	Weight kg	Matching Accessories Product No. Buffer Set	Product No. Pin Connection	Product No. Roller Guide
480 201 84	200	**G** (cast iron, flanged)	2500	1900	15,3	**480 710 84**	**480 221 84**	**480 210 44**
480 200 84	200	**K** (with bandage)	1200	700	15,1	**480 710 84**	**480 221 84**	**480 210 84**
480 301 84	250	**G** (cast iron, flanged)	3500	2500	27,6	**480 710 84**	**480 321 84**	**480 510 44**
480 300 84	250	**K** (with bandage)	1700	900	26,7	**480 710 84**	**480 321 84**	**480 310 84**

* With Hydropur tyres and stand-still times of more than two hours under load, the load bearing capacity only comes to 50% of the maximum value.

Dimensions Table Travel-Wheel Systems RB/I

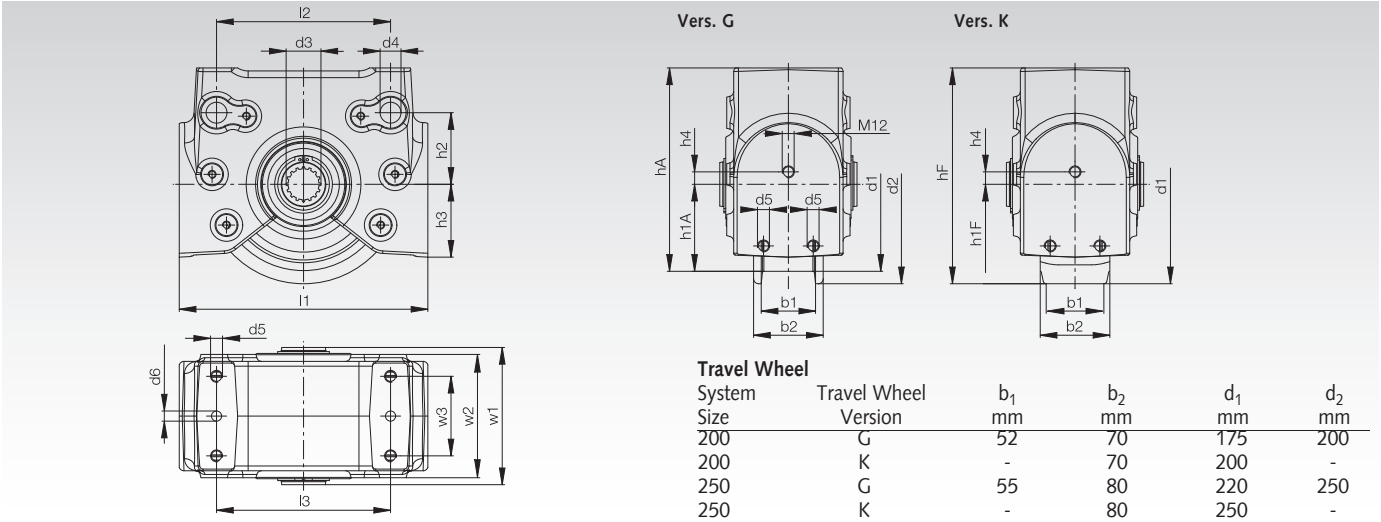

Travel Wheel

System Size	Travel Wheel Version	b_1 mm	b_2 mm	d_1 mm	d_2 mm
200	G	52	70	175	200
200	K	-	70	200	-
250	G	55	80	220	250
250	K	-	80	250	-

System Size	$d_3^{g6/H7}$ mm	d_4^{F8} mm	d_5 mm	d_6^{H13} mm	h_A mm	h_F mm	$h_{1\ Vers.\ G}$ mm	$h_{1\ Vers.\ K}$ mm	h_2 mm	h_3 mm	h_4 mm	l_1 mm	l_2/l_3 mm	w_1 mm	w_2 mm	w_3 mm
200	N35x2x16	21	M12	10,2	204,5	217	87,5	100	72	77	12,5	250	175	138	126	80
250	N45x2x21	30	M16	14	255	270	110	125	90	97	-10	306	220	156	138	85

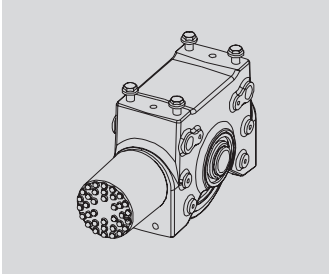

Travel wheel system with buffer set.

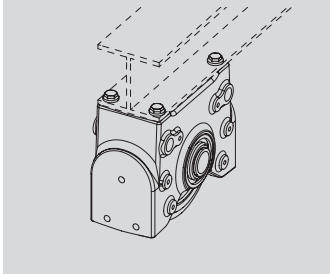

Travel wheel system, Inverted Mounting (screws supplied).

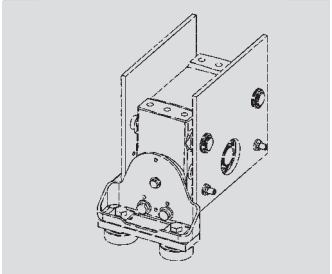

Mounting with bolt set, for horizontal guide-roller arrangement.

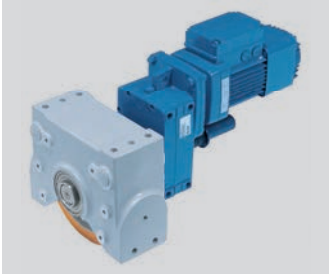

Powered travel wheel block with geared motor RBM/I.

Accessories for Travel-Wheel Systems RB/I

Buffer Set

Material: Polyurethane cellular foam, spacers made from plastic, black.

Consisting of: one buffer, threaded pin M12 x 55 mm, two spacers 12.5 mm (for mounting without guide roller) and one spacer 25 mm (for mounting with guide roller, using the supplied nuts M12).

The required thread has already been machined on both face ends of the travel-wheel system. The screw-on buffer fits both travel-wheel-system sizes 200 and 250.

Temperature range: -20°C to +60°C.
Weight: 0.8 kg

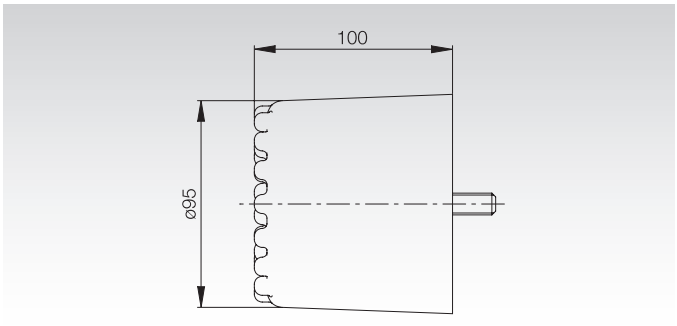

Product No. 480 710 84, Buffer Set, Matching Travel-Wheel System Size 200 and 250

Pin Connection Sets

Material: Steel

Consisting of: two pins, washers and retaining rings, threaded adjusting pins and nuts for lateral alignment and fixation.

Two sizes for **travel-wheel system size** 200 or 250. The pin connection set is used to mount the **travel-wheel system** into an existing hollow section when mounted from the side. One set required for each **travel-wheel system**.

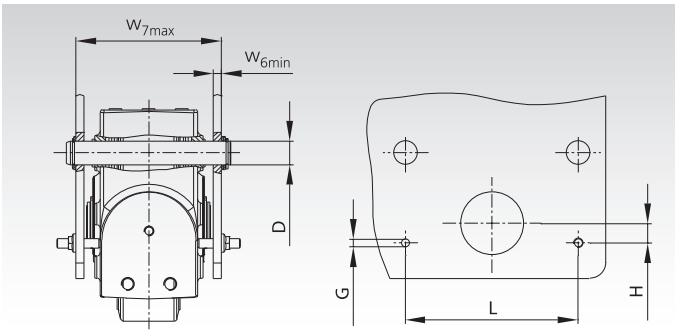

Ordering Details:e.g.: Product No., Type, Size

Product No. Pin Set	System Size	W_{6min} mm	W_{7max} mm	$D^{h8/D9}$ mm	G mm	L mm	H mm	Weight kg
480 221 84	200	8	158	21	M10	175	20	1,1
480 321 84	250	10	185	30	M12	220	25	2,6

Horizontal Guide-Roller Arrangements

Material: Base: steel plate, zinc plated.
Damping elements: Polyamide (damping elements only for **travel-wheel system** with Hydropur-tyre travel wheel)
Version G: for **travel-wheel system** with cast wheel. Without damping element.
Version K: for **travel-wheel system** with Hydropur tyre. With damping element.
Consisting of: roller bracket, bearing, damping element and mounting bolts (damping element only for version K).
Two sizes for **travel-wheel system size** 200 or 250. The horizontal guide-roller arrangement is used for low-friction guidance and to precisely achieve individual track gauge dimensions. The guide roller is e.g. recommended for flanged wheels (version G) running on narrow tracks . The guide rollers are only used on one of the rails.

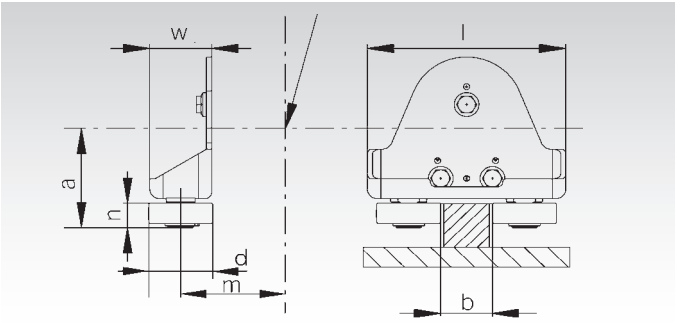

Product No. Guide Roller	Travel-Wheel System Size	Version	d mm	l mm	m mm	a mm	w mm	n mm	b mm	Weight kg
480 210 44	200	G	62	192	155	110	60	25	30-70	2,3
480 210 84	200	K	52	192	155	124	60	25	62-82	2,4
480 510 44	250	G	72	230	189	137	72	29	30-80	3,6
480 310 84	250	K	72	230	189	154	72	29	64-84	3,7

Geared Motors RBM/I for travel wheel systems

Material: Housing: Aluminium, painted blue (RAL 5009).
Gears: bevel-gear system, case hardened, fatigue endurable.
Lubrication: Mineral oil.
Motor: Three-phase AC

400V 50 Hz, dual speed, with brake.

Other motor and gear box versions (e.g. with frequency inverter or angular gear) on request.

Ready-to-mount dual-speed geared motors incl. adaptor flange (as torque support) to be combined with travel-wheel sets RB/I.
The mounting position can be modified in steps of 15°.

Single Wheel Drive: one geared motor RBM/I is flange-mounted onto one travel-wheel system RB/I. In carriages two opposing travel-wheel sets have to be powered.
Central Drive Set: the geared motor is flange-mounted onto the travel-wheel system. The connection with the opposing travel-wheel system is done with a central drive set (this set has to be ordered separately). The connecting shaft (output shaft) is already mounted on the geared motors (covered with protection sleeve and protection cap).

Ordering Details:e.g.: Product No., Type, Size

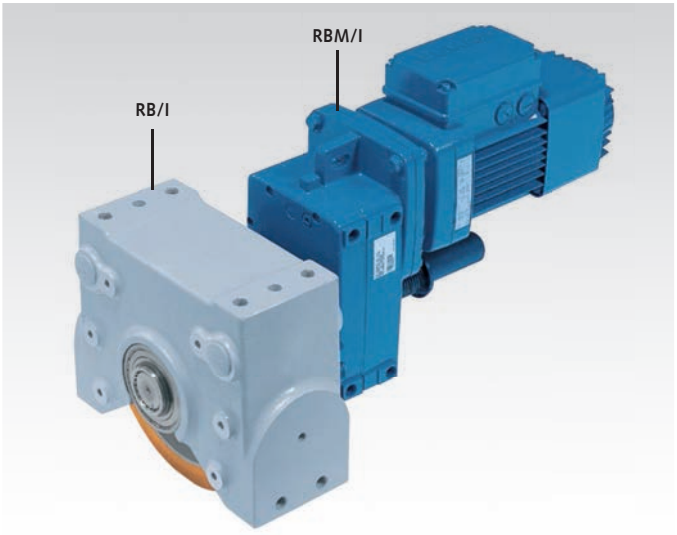

Travel-Wheel System RB/I has to ordered separately.

Geared Motors RBM/I for Travel-Wheel System Size 200

Product No.	Motor-Type	P* kW	Transm. i	Current* A	Weight kg	Dimensions Table
482 211 46	63A8/2	0,25	123 :1	0,95	23	1
482 212 46	71A8/2	0,34	126 :1	1,0	29	3
482 213 46	80A8/2	0,50	39,9 :1	1,4	34	2
482 214 46	90B8/2	0,80	39,4 :1	2,3	46	4
482 215 46	100A8/2	1,20	19,9 :1	3,2	54	4
482 221 46	63A8/2	0,25	135 :1	0,95	27	3
482 222 46	71A8/2	0,34	44,1 :1	1,0	25	1
482 223 46	90B8/2	0,50	45,5 :1	1,4	46	4
482 224 46	90B8/2	0,80	23 :1	2,3	46	4
482 255 46	100A8/2	1,20	23 :1	3,2	54	4

Geared Motors RBM/I for Travel-Wheel System Size 250

Product No.	Motor-Type	P* kW	Transm. i	Current* A	Weight kg	Dimensions Table
483 231 46	63A8/2	0,25	156 :1	0,95	29	5
483 232 46	71A8/2	0,34	166 :1	1,0	34	8
483 233 46	90B8/2	0,80	48,3 :1	2,3	47	7
483 234 46	100A8/2	1,20	49 :1	3,2	66	9
483 235 46	100A8/2	1,20	25,3 :1	3,2	55	7
483 241 46	63A8/2	0,25	156 :1	0,95	29	5
483 242 46	71A8/2	0,34	166 :1	1,0	34	8
483 243 46	80A8/2	0,50	55,7 :1	1,4	39	6
483 244 46	90B8/2	0,80	55,7 :1	2,3	58	9
483 245 46	100A8/2	1,20	29,2 :1	3,2	55	7

* Values at double-pole operation (high speeds).

Selection Tales for Travel-Wheel Systems

First the Travel-Wheel-System Size (200 or 250 depending on the ultimate load) and Type of Travel Wheel (cast iron flanged wheel or Hydropur-tyre wheel, depending on the operating conditions) has to be selected. The further selection is done according to the load to be moved per driving motor and according to the driving speed. the table value intersection point states the Product No. of the geared motor to be used.

Travel-Wheel System Size 200 with Cast Wheel, $R_{max.}$ = 2500 kg

Product No. matching geared motor RBM/I at speed in m/min*

Weight	12.5 (3.1)	40 (10)	80 (20)
to 5000 kg	**482 211 46****	**482 213 46****	**482 215 46**
to 6000 kg	**482 211 46****	**482 213 46****	-
to 10000 kg	**482 212 46**	**482 214 46**	-
to 11000 kg	**482 212 46**	-	-

Travel-Wheel System Size 200 with Hydropur Tyre $R_{max.}$ = 1200 kg

Product No. matching geared motor RBM/I at speed in m/min*

Weight	12.5 (3.1)	40 (10)	80 (20)
to 2000 kg	**482 221 46**	**482 222 46****	**482 224 46**
to 4000 kg	**482 221 46**	**482 223 46**	**482 225 46**
to 5000 kg	**482 221 46**	**482 223 46**	-

* Values in brackets apply to lower speeds (the motors are dual-speed).
** Central drive not possible (due to stepped shaft or dimensions of motor casing).

Travel-Wheel System Size 250 with Cast Wheel, $R_{max.}$ = 3500 kg

Product No. matching geared motor RBM/I at speed in m/min*

Weight	12.5 (3.1)	40 (10)	80 (20)
to 5000 kg	**483 231 46****	**483 233 46****	**483 235 46****
to 8000 kg	**483 231 46****	**483 233 46****	-
to 16000 kg	**483 232 46**	**483 234 46**	-

Travel-Wheel System Size 250 with Hydropur Tyre, $R_{max.}$ = 1700 kg

Product No. matching geared motor RBM/I at speed in m/min*

Weight	12.5 (3.1)	40 (10)	80 (20)
to 2000 kg	**483 241 46****	**483 243 46****	**483 245 46****
to 4000 kg	**483 242 46**	**483 244 46**	-

* Values in brackets apply to lower speeds (the motors are dual-speed). ** Central drive not possible.


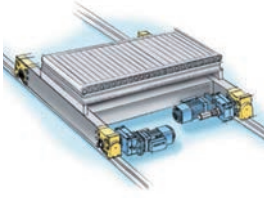
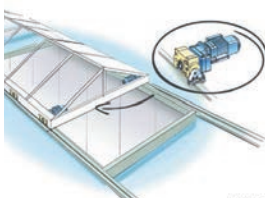
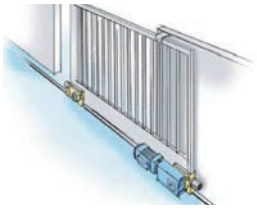
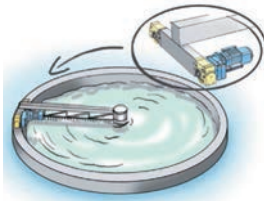

Dimensions Table for Travel-Wheel System Drive RBM/I

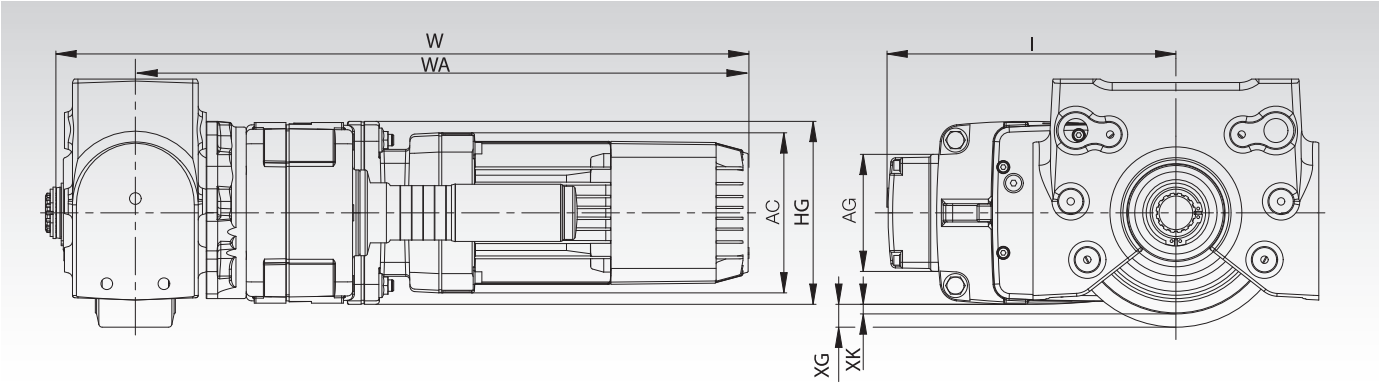

Dimensions Table	Size of Travel-Wheel System	L mm	HG mm	W mm	WA mm	AC mm	AG mm	XG (Vers.G) mm	XK (Vers.K) mm
1	200	228	131	608	539	140	103	17,5	30
2	200	238	131	664	595	157	103	9	21,5
3	200	253	160	615	546	140	103	7,5	20
4	200	281	160	715	646	196	133	-10,5	2
5	250	253	160	641	563	140	103	30	45
6	250	263	160	697	619	157	103	30	45
7	250	281	160	741	663	196	133	12	27
8	250	272	190	650	572	140	103	15	30
9	250	300	190	750	672	196	133	12	27

Central Drive Set

Material: Splined shaft, coupling, washers and rings made from steel, shaft protection made from plastic.

Two sizes available suiting travel-wheel system 200 and 250. Two length for gauges up to 1500 mm or up to 2900 mm.

Consisting of: Splined shaft, coupling with pin, shaft protection, washers and retaining rings.

The central-drive set serves to combine two travel-wheel sets RB/I with a geared motor RBM/I to make up a central drive. To achieve this, the shaft is shortened to the required length on the coupling side, then the shaft protection cap is taken off the geared motor and the shafts are connected using the rigid coupling. The pin serves as stop inside the coupling. The shaft is fixed in the travel-wheel system with the retaining rings.

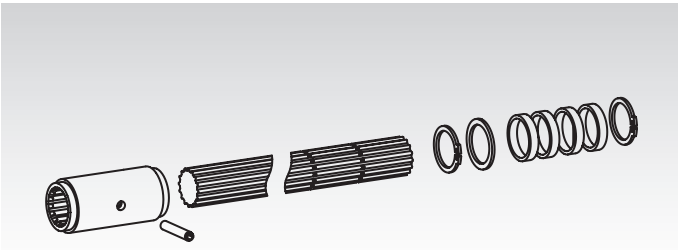

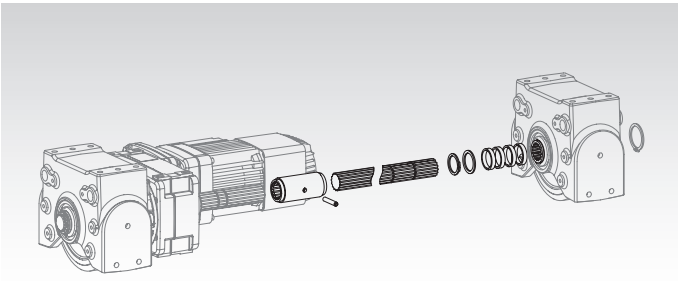

Ordering Details: e.g.: Product No, Type, Travel-Wheel System-Size, up to distance

Product No.	Travel-Wheel Syst. Size	for Distance* up to mm	Shaft Ø mm	Shaft Length approx. mm	Weight kg
480 256 84	200	1500	35	1115	9
480 257 84	200	2900	35	2515	18,5
480 356 84	250	1500	45	1070	13,5
480 357 84	250	2900	45	2470	29

* The shafts are to be shortened by the customer on assembly.

Application examples for Travel-Wheel System Drives

Two Single Drives:
4 x Travel-Wheel System RB/I
2 x Geared Motor RBM/I

Optional accessories:
4 x Buffer Set
4 x Pin Connection Set
2 x Horizontal Guide Roller Arrangement

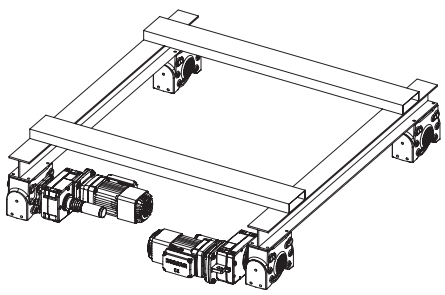

Central Drive Set:
4 x Travel-Wheel System RB/I
1 x Geared Motor RBM/I
1 x Central Drive Set

Optional accessories:
4 x Buffer Set
4 x Pin Connection Set
2 x Horizontal Guide Roller Arrangement

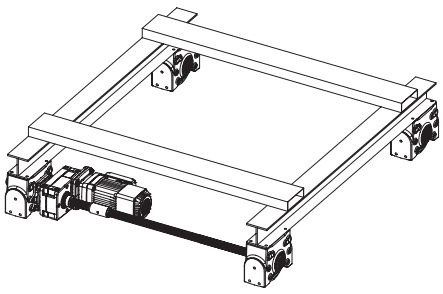

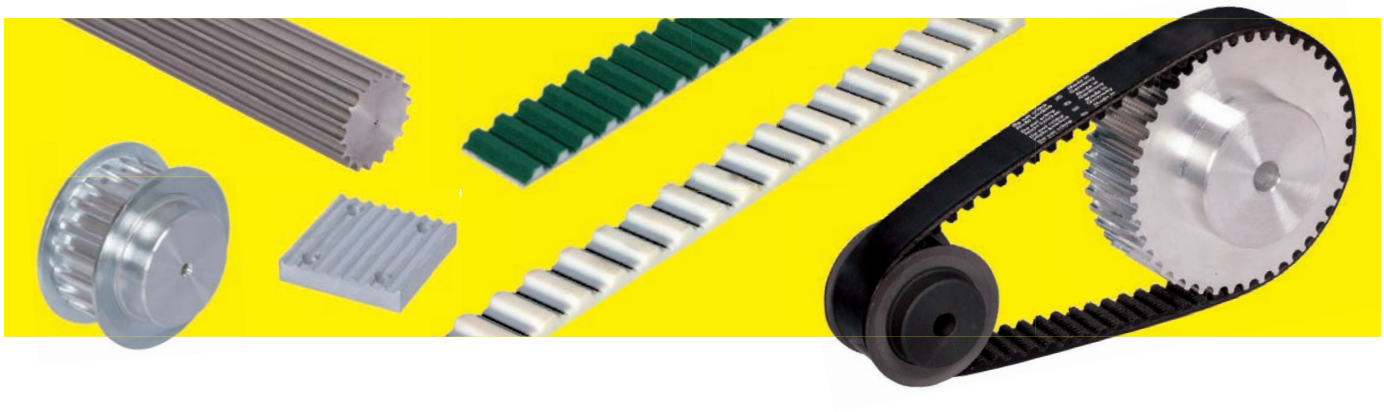



Contents **Page**

Description and selection guide 129
Calculation (dimensioning) 131
Performance Figures T-Profile 132
Performance Figures AT-Profile 133
Performance Figures HTD 3M and 5M 134
Performance Figures HTD 8M and 14M 135
Performance Figures Inch-Profile MXL and XL 136
Performance Figures Inch-Profile L and H 137
Pulleys T 2.5 and T 5 made from plastic 138
Pulleys T 2.5 made from aluminium 139
Pulleys T 5 made from aluminium 140
Pulleys T 10 made from aluminium 142
Pulleys AT 5 made from aluminium 144
Pulleys AT 10 made from aluminium 146
Pulleys HTD 3M made from aluminium 148
Pulleys HTD 5M made from steel or aluminium 149
Pulleys HTD 5M for Taper clamping bush 150
Pulleys HTD 8M made from steel or cast iron 151
Mounting options for drive wheels 153
Pulleys HTD 8M for Taper clamping bush 154
Pulleys HTD 14M for Taper clamping bush 156
Taper clamping bushes 158
Pulleys Inch-Profile MXL made from aluminium 161
Pulleys Inch-Profile XL made from aluminium 162
Pulleys Inch-Profile L made from Steel or cast iron 162
Pulleys Inch-Profile H made from Steel or cast iron 164
Splined shafts T-Profile 166
Splined shafts AT-Profile 167
Splined shafts HTD-Profile 168
Splined shafts Inch-Profile 169
Flanges for Timing Belt Pulleys 170
Fixing Plates for open-length timing belts 171
Open-length timing belts 172
Timing belts T-Profile 175
Timing belts AT-Profile 177
Timing belts HTD-Profile 178
Timing belts Inch Pitch 180
Tensioning rollers and tensioning elements 182

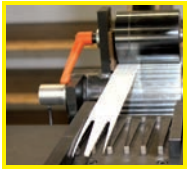

Timing Belt Welding within 24h-Service

Timing-Belt Drives - Description

General Description
Timing-belt drives enable a quiet operation and synchronous transmission of power. As they are maintenance free, these drives are very cost efficient. Due to varying requirements and consideration of the latest developments, there are a large number of different profiles, belt types and pulleys on the market. When non-positive drives (e.g. v-belt systems) are replaced, it is worth considering whether a conversion to a positive power transmission could be allowed from a safety point of view (some drives require slip at overload).

Selection and Dimensioning
The belt material and type of timing belt must be selected considering the specific situation (e.g. required features regarding machine or surroundings). There are performance tables and a user-friendly calculation programme on the internet to help you select the correct size. Small pulley diameters reduce the service life. And at least 6 teeth should be engaged at any time.
When consulting the performance tables, several application-specific operating factors must be considered.

Mounting and Maintenance
At least one pulley must be equipped with flanges. The axes must be parallel (deviation no more than +0.5°). The belt must not be overstretched during mounting. For mounting and adjustment of the ideal belt there have to be sufficient possibilities for adjustment incorporated into the system.

Belt Tension
Each belt needs a certain pre-tension, depending on the type of belt, pulley diameter, center distance and the tangential force to be transmitted. The overall sum of tensioning and peripheral force must not exceed the permitted tensile force of the belt. The belt tension is best adjusted by altering the center distance. Otherwise a smooth tensioning pulley mounted on the outside or a toothed one on the inside of the belt may be used for adjustment.

Degree of degree of efficiency de
Depending on the type of belt (flexibility) and the number of teeth on the pulley (bending) the degree of efficiency can reach 98 %. Belts with tensile members of glass fibre cords (HTD and Inch) are particularly flexible.

Timing Belt Profiles

Type	Profile	Pitch mm	Overall Height** mm	Tooth Height mm	Tensile Force N*
Metric	**T2.5**	2.5	1.30	0.70	120
	T5	5.0	2.20	1.20	330
	T10	10.0	4.50	2.50	780
Metric	**AT5**	5	2.70	1.20	700
	AT10	10	5.00	2.50	1300

Type	Profile	Pitch mm	Overall Height mm	Tooth Height mm	Tensile Force N*
HTD	**3M**	3	2.40	1.20	100
	5M	5	3.60	2.10	208
	8M	8	5.60	3.40	375
	14M	14	10.00	6.10	425
Inch	**MXL**	2.032	1.10	0.51	39
	XL	5.080	2.20	1.27	56
	L	9.525	3.60	1.91	98
	H	12.700	4.30	2.29	235

* Permissible tensile force at 10mm belt width.

** Hight may vary at open-length types.

T Timing Belt Drives

- Classical, trapezoid profile in accordance with DIN 7721 with metric dimensions, pitch 2.5 mm, 5 mm and 10 mm in several widths. Pitch 20 mm and other widths available on request.
- Often used, cost-efficient, clean standard belt drive in many areas of machine building, e.g. also in the food industry. Polyurethane (PU) timing belts with tensile members of steel, little lengthening
- Little and light-coloured abrasion, good resistance against oil, fats and many chemicals. Temperature range -30° to +80°C. Good flexibility.
- Open length belts from thermoplastic polyurethane TPU can get welded to endless belts in special lengths.
- cost-efficient pulleys made from aluminium (some also made from plastic) pre-bored (custom bore etc. at extra charge).
- T timing belt drives do **not** feature little backlash (low backlash or zero backlash pulleys can be especially manufactured on request).

AT Timing Belt Drives

- Trapezoid profile especially designed to transmit high power, with metric dimensions, pitch 5 mm and 10 mm, in stock in several widths. Pitch 20 mm and other widths available on request.
- Clean belt drive used in many areas of machine building, e.g. also in the food industry.
- Polyurethane (PU) timing belts with tensile members of steel, little lengthening
- Little and light-coloured abrasion, good resistance against oil, fats and many chemicals. Temperature range -30° to +80°C. Good flexibility.
- Open length belts from thermoplastic polyurethane TPU can get welded to endless belts in special lengths.
- Cheap pulleys made from aluminium (some also made from plastic) pre-bored (custom bore etc. at extra charge).
- AT timing belt drives do **not** feature little backlash (low backlash or zero backlash pulleys can be especially manufactured on request).

HTD Timing Belt Drives

- Heavy-duty timing belt with half-round teeth profile, with metric dimensions, pitch 3 mm, 5 mm, 8 mm and 14 mm.
- Low-backlash belt drive with high efficiency used in many areas of machine building.
- Neoprene timing belts with tensile member of glass-fibre. Little, but dark abrasion. Temperature range -20° to +100°C.
- Up to medium speed quiet. At higher speed some noise due to the fast movement of air out of the tooth gaps.
- Pitch-true, more expensive pulleys made from steel (pitch 3M made from aluminium, pitch 5M from 44 teeth made from aluminium).
- Pulleys pre-bored (custom bore etc. at extra charge), pitch 8M and 14M also prepared for Taper clamping bush.

Inch Timing Belt Drives

- Classical trapezoid profile in accordance with DIN 5296 with inch dimensions, profile MXL, XL, L and H (pitch 0.08“ = 2.032 mm to 1/2“ = 12.7 mm), in several widths. Other sizes on request.
- Classical timing-belt drive which is, apart from the favoured MXL-profile, usually not used in newly designed systems anymore.
- Neoprene timing belts with tensile member of glass-fibre. Low noise, little, but dark abrasion. Temperature range -20° to +100°C.
- Pulleys made from steel or cast iron (pitch MXL and XL made from aluminium), pre-bored (custom bore, etc. at extra charge).
- Inch timing belt drives do **not** feature little backlash.

Timing Belts: Online – Calculation Program on the Internet

At **www.maedler.de** in the internet you click at the button ***MÄDLER®*-Tools** and you get to a comfortable online calculation programme. This programme contains all common sizes and ensures a fast and safe set up of timing belt drives.

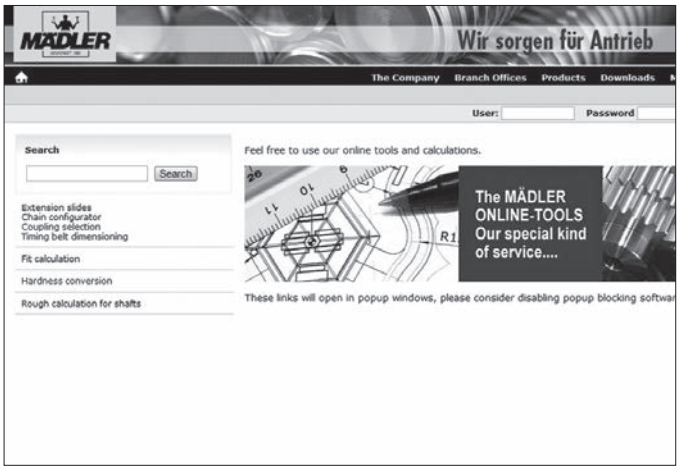

The number and location of the pulleys can be altered. Select the profile and the number of teeth. Enter your performance data and let the system work out the required belt width. ATTENTION: The performance data either has to be entered for every single pulley or the performance calculation has to be turned of for the output pulleys. The determination of the belt length is simplified through the use of a scroll-window listing the standard belt lengths. In a next step lease check whether the stated safety factor is sufficient. If the system is over or under dimensioned, choose larger or smaller timing belt profile respectively.

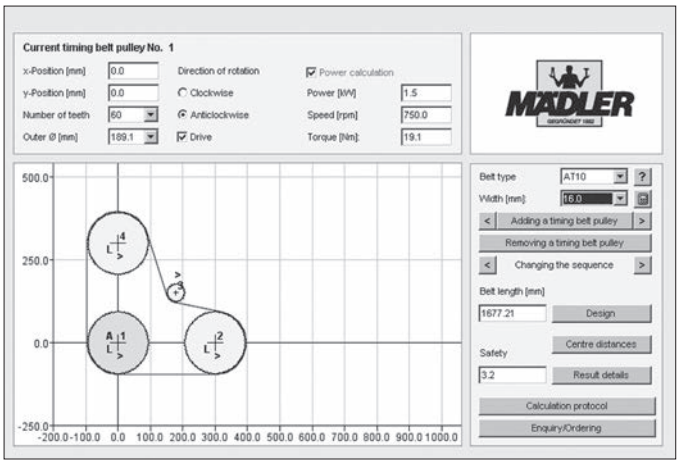

For your own documentation you can print out a calculation report with all parametres and results of your drive set up. If a pop-up blocker is activated in your Internet Explorer, it has to be turned off first.

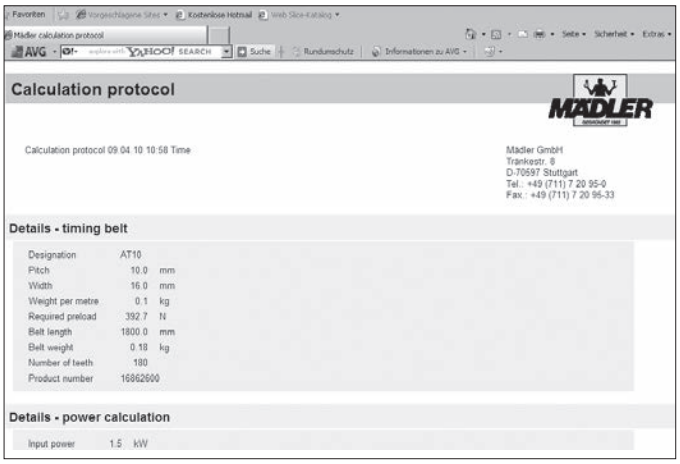

The parts list contains all selected products and simplifies the ordering process. You can print, export or save the parts list. By clicking on the Product No. you get to the internet page of the respective product group.
On theses pages you can get collect information, even look at 2D and 3D CAD drawings.

.

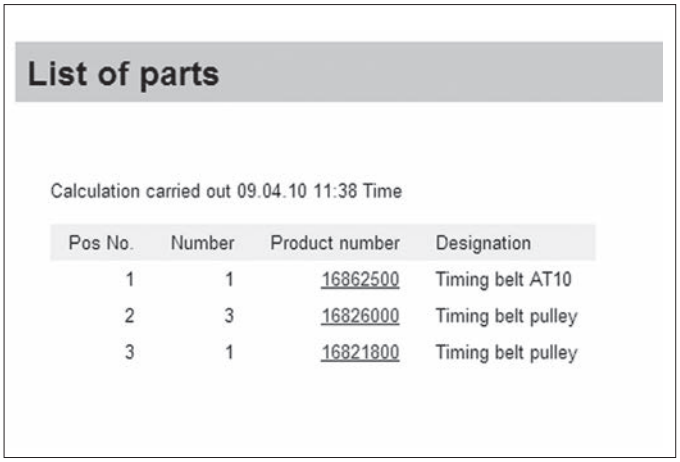

Calculation of the Power P_B

$$P_B = P_N \times (K_1 + K_2 + K_3 + C_1)$$

P_B: Selection Power [kW]
P_N: Nominal Power Driving Motor
K_1: Load Factor (Table 1)
K_2: Tensioning Pulley Factor (Table 2)
K_3: Transmission Ratio Allowance (Table 3)
C_1: Teeth Meshing Factor (Table 4)

Notes Regarding the Calculation

The corrective factors below are in particular fitting for T and AT timing belt drives. This means that the calculations below only render exact results for these belt types. The formulas are however generally valid, which means the results are roughly correct for HTD and Inch belt types. For an exact and comfortable calculation please use our online calculation programme at www.maedler.de, see page 130.

Table 1: Corrective Factor for Load K_1

Examples for machines used: Machines that are not mentioned below have to be matched to a group with similar load.	Example for Driving Units					
	Starting Torque up to 3 times Nominal Torque			Starting Torque over 3 times Nominal Torque		
	AC Motors (standard and synchronous motors) DC Shunt-Wound Motor Combustion engines with two or more cylinder			Electric motors (with high starting and breaking torque) DC Compound Motors Combustion engines with one cylinder		
	Daily Operating Time (hours)					
	up to 5	up to 12	up to 24	up to 5	up to 12	up to 24
Office Machines, Household Machines Counting Machines	1.0	1.2	1.4	1.2	1.4	1.6
Wood-working Machines, Printing Machines Fans and Blowers	1.2	1.4	1.6	1.4	1.6	1.8
Machine Tools, Textile Machines Laundry Machines	1.3	1.5	1.7	1.5	1.7	1.9
Paper Machines, Reciprocating Engines Hoisting Devices	1.4	1.6	1.8	1.6	1.8	2.0

Table 2: Corrective Factor for Tens. Pulley K_2

Mounting Position of Tensioning Pulley K_2	
Inner Side Slack Length	0.0
Outer Side Slack Length	0.1
Inner Side Tight Length	0.1
Outer Side Tight Length	0.2

Table 3: Corrective Factor for Ratio K_3

Transmission Ratio	K_3
1.00 - 1.24	0.4
1.25 - 1.74	0.3
1.75 - 2.49	0.2
2.50 - 3.49	0.1
over 3.50	0.0

Table 4: Teeth-in-Mesh Factor C_1

Teeth in mesh					
No. of Teeth in Mesh:	≥ 6	5	4	3	2
Teeth-in-Mesh Factor C_1:	0	0.25	0.7	1.5	4

Selection of Belt Type

For the calculation of P_B select belt type, pitch, width and pulley diameter by looking at the Performance Table page 132.
Please consider the width factors mentioned in the table.

Selection of Pulley

Use the largest pulley diameter possible. A larger diameter leads to a reduction of the the bending load and of the required belt width. We recommend the standard pulleys listed in the catalogue. The respective permissible torques can be found in the Performance Tables page 132.

Checking the Belt Speed

Belt speeds above 30 m/s require an exact balancing of the pulleys. The belt speed is calculated with the formula below:

$$v = (d_w \times n) / 19100$$

v: belt speed (m/s)
d_w: effective diameter of the pulley (mm)
n: torque of the pulley (min^{-1})

Selecting the Belt Length

When selecting the belt length, always consider the lengths listed in the catalogue. The belt length for a simple drive with two toothed pulleys and a transmission ratio of 1:1 can be easily calculated from the effective diameter of the toothed pulley and the centre distance:

Effective length of the belt = effective circumference of the toothd pulley plus twice the centre distance

The effective length of a belt and the centre distance for drives with a ratio other than 1:1 or with more than two toothed pulleys can be detremined from a drawing or, even simpler, by using the online tool at **www.maedler.de, MÄDLER®-Tools** (see page 130).

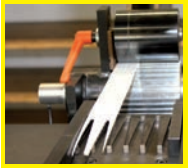

Timing Belt Welding within 24h-Service

Profile T 2.5 Performance Figures in W/10 mm Timing Belt Width

Speed of small pulley min^{-1}	Teeth No. of Small Pulley 12	14	16	18	20	24	28	30	36	40	48	60
	Effective Diameter (mm) 9.56	11.14	12.73	14.32	15.92	19.15	22.35	23.95	28.75	31.90	38.30	47.85
100	2,3	2,5	3,0	3,3	3,8	4,5	5,0	5,5	6,5	7,3	8,8	11,0
200	4,5	5,0	5,8	6,5	7,3	8,8	10,3	11,0	13,3	14,5	17,5	22,0
400	8,8	10,3	11,8	13,3	14,5	17,5	20,5	22,0	26,3	29,3	35,0	43,8
500	11,0	12,8	14,5	16,5	18,3	22,0	25,5	27,5	32,8	36,5	43,8	54,8
600	13,3	15,3	17,5	19,8	22,0	26,3	30,8	32,8	39,5	43,8	52,5	65,8
800	17,5	20,5	23,5	26,3	29,3	35,0	41,0	43,8	52,5	58,5	70,0	87,5
1000	22,0	25,5	29,3	32,8	36,5	43,8	51,0	54,8	65,8	73,0	87,5	109,3
1400	-	35,8	41,0	46,0	51,0	61,3	71,5	76,8	92,0	102,0	122,5	152,8
1800	-	46,0	52,5	59,3	65,8	78,8	92,0	98,5	118,0	131,0	157,0	195,8
2400	-	-	70,0	78,8	87,5	105,0	122,5	131,0	157,0	174,3	208,8	259,5
2800	-	-	81,8	92,0	102,0	122,5	142,5	152,8	183,0	203,0	242,8	301,3
3000	-	-	87,5	98,5	109,3	131,0	152,8	163,5	195,8	217,3	259,5	322,0
3600	-	-	105,0	118,0	131,0	157,0	183,0	195,8	234,3	259,5	309,8	382,8
4000	-	-	116,5	131,0	145,5	174,3	203,0	217,3	259,5	287,5	342,5	422,3
4800	-	-	139,8	157,0	174,3	208,8	242,8	259,5	309,8	342,5	406,5	498,3

Profile T 5 Performance Figures in kW/10 mm Timing Belt Width

Speed of small pulley min^{-1}	Teeth No. of Small Pulley 12	14	16	18	20	24	28	30	36	40	48	60
	Effective Diameter (mm) 19.10	22.28	25.46	28.65	31.83	38.20	44.56	47.75	57.30	63.66	76.39	95.49
100	0,01	0,02	0,02	0,02	0,02	0,03	0,03	0,04	0,04	0,05	0,06	0,07
200	0,02	0,02	0,03	0,03	0,04	0,04	0,05	0,05	0,06	0,07	0,09	0,11
400	0,04	0,05	0,05	0,06	0,06	0,08	0,09	0,10	0,12	0,13	0,16	0,19
500	0,05	0,06	0,06	0,07	0,08	0,10	0,11	0,12	0,14	0,16	0,19	0,24
600	0,06	0,07	0,08	0,08	0,09	0,11	0,13	0,14	0,17	0,19	0,23	0,28
800	0,07	0,09	0,10	0,11	0,12	0,15	0,17	0,18	0,22	0,24	0,29	0,36
1000	0,09	0,10	0,12	0,13	0,15	0,18	0,20	0,22	0,26	0,29	0,35	0,44
1400	0,12	0,13	0,15	0,17	0,19	0,23	0,27	0,29	0,35	0,38	0,46	0,58
1800	0,14	0,16	0,19	0,21	0,23	0,28	0,33	0,35	0,42	0,47	0,56	0,70
2400	0,17	0,20	0,23	0,26	0,29	0,35	0,40	0,43	0,52	0,58	0,69	0,86
3000	0,20	0,23	0,27	0,30	0,34	0,40	0,47	0,50	0,60	0,67	0,81	1,01
4000	0,24	0,28	0,32	0,37	0,41	0,49	0,57	0,61	0,73	0,81	0,97	1,22
5000	0,28	0,33	0,37	0,42	0,47	0,56	0,65	0,70	0,84	0,93	1,12	1,40
6000	-	-	0,42	0,47	0,52	0,63	0,78	0,78	0,94	1,04	1,25	1,56
7000	-	-	0,46	0,51	0,57	0,69	0,80	0,86	1,03	1,14	1,37	-

Profile T 10 Performance Figures in kW/10 mm Timing Belt Width

Speed of small pulley min^{-1}	Teeth No. of Small Pulley 12	14	16	18	20	24	28	30	36	40	48	60
	Effective Diameter (mm) 38.20	44.56	50.93	57.30	63.66	76.39	89.13	95.49	114.59	127.32	152.79	190.99
100	0,04	0,05	0,06	0,06	0,07	0,08	0,10	0,10	0,12	0,14	0,17	0,21
200	0,07	0,08	0,10	0,11	0,12	0,15	0,17	0,18	0,22	0,24	0,29	0,36
400	0,13	0,15	0,17	0,20	0,22	0,26	0,31	0,33	0,39	0,44	0,52	0,65
600	0,19	0,22	0,25	0,28	0,31	0,37	0,43	0,47	0,56	0,62	0,74	0,93
800	0,24	0,28	0,32	0,36	0,40	0,48	0,56	0,59	0,71	0,79	0,85	1,19
1000	0,29	0,33	0,38	0,43	0,48	0,57	0,67	0,72	0,86	0,95	0,95	1,43
1400	0,38	0,44	0,50	0,56	0,63	0,75	0,88	0,94	1,14	1,25	1,33	1,88
1800	0,46	0,53	0,61	0,68	0,76	0,91	1,06	1,14	1,37	1,52	1,67	2,28
2200	0,53	0,62	0,70	0,79	0,88	1,06	1,23	1,32	1,59	1,76	1,97	2,64
2800	0,63	0,73	0,84	0,94	1,05	1,26	1,46	1,57	1,88	2,09	2,38	3,14
3000	-	0,77	0,88	0,99	1,10	1,32	1,54	1,65	1,98	2,20	2,51	3,29
3500	-	0,89	0,99	1,12	1,24	1,49	1,74	1,86	2,24	2,49	2,63	-
4000	-	-	1,07	1,20	1,33	1,60	1,87	2,00	2,40	2,67	2,98	-
5000	-	-	1,23	1,39	1,54	1,85	2,16	2,31	2,77	-	-	-
6000	-	-	1,38	1,55	1,73	2,07	2,42	2,59	-	-	-	-

The permissible performance figures for any timing belt width can be calculated by multiplying the figures in the table above with the respective width factors on page 133.

In this area of the table the service life is affected!

Profile AT 5 Performance Figures in kW/10 mm Timing Belt Width

Speed of small pulley min^{-1}	Teeth No. of Small Pulley 12	14	16	18	20	24	28	30	36	40	48	60
	Effective Diameter (mm) 19.10	22.28	25.46	28.65	31.83	38.20	44.56	47.75	57.30	63.66	76.39	95.49
100	0,02	0,05	0,05	0,05	0,05	0,07	0,07	0,09	0,09	0,12	0,14	0,16
200	0,05	0,05	0,07	0,07	0,09	0,09	0,12	0,12	0,14	0,16	0,21	0,26
400	0,09	0,12	0,12	0,14	0,14	0,19	0,21	0,23	0,28	0,30	0,37	0,44
500	0,12	0,14	0,14	0,16	0,19	0,23	0,26	0,28	0,32	0,37	0,44	0,56
600	0,14	0,16	0,19	0,19	0,21	0,26	0,30	0,32	0,39	0,44	0,53	0,65
800	0,16	0,21	0,23	0,26	0,28	0,35	0,39	0,42	0,51	0,56	0,67	0,84
1000	0,21	0,23	0,28	0,30	0,35	0,42	0,46	0,51	0,60	0,67	0,81	1,02
1400	0,28	0,30	0,35	0,39	0,44	0,53	0,63	0,67	0,81	0,88	1,07	1,35
1800	0,32	0,37	0,44	0,49	0,53	0,65	0,77	0,81	0,97	1,09	1,30	1,62
2400	0,39	0,46	0,53	0,60	0,67	0,81	0,93	1,00	1,21	1,35	1,60	2,00
3000	0,46	0,53	0,63	0,70	0,79	0,93	1,09	1,16	1,39	1,55	1,88	2,34
4000	0,56	0,65	0,74	0,86	0,95	1,14	1,32	1,42	1,69	1,88	2,25	2,83
5000	0,65	0,77	0,86	0,97	1,09	1,30	1,51	1,62	1,95	2,16	2,60	3,25
6000	-	-	0,97	1,09	1,21	1,46	1,81	1,81	2,18	2,41	2,90	3,62
7000	-	-	1,07	1,18	1,32	1,60	1,86	2,00	2,39	2,64	3,18	-

Profile AT 10 Performance Figures in kW/10 mm Timing Belt Width

Speed of small pulley min^{-1}	Teeth No. of Small Pulley 18	20	24	28	30	36	40	48	60
	Effective Diameter (mm) 57.30	63.66	76.39	89.13	95.49	114.59	127.32	152.79	190.99
100	0,16	0,19	0,22	0,27	0,27	0,32	0,38	0,46	0,57
200	0,30	0,32	0,41	0,46	0,49	0,59	0,65	0,78	0,97
400	0,54	0,59	0,70	0,84	0,89	1,05	1,19	1,40	1,76
600	0,76	0,84	1,00	1,16	1,27	1,51	1,67	2,00	2,51
800	0,97	1,08	1,30	1,51	1,59	1,92	2,13	2,30	3,21
1000	1,16	1,30	1,54	1,81	1,94	2,32	2,57	2,57	3,86
1400	1,51	1,70	2,03	2,38	2,54	3,09	3,38	3,59	5,08
1800	1,84	2,05	2,46	2,86	3,08	3,70	4,10	4,51	6,16
2200	2,13	2,38	2,86	3,32	3,56	4,29	4,75	5,32	7,13
2600	2,40	2,67	3,21	3,75	4,02	4,83	5,37	6,08	8,05
3000	2,67	2,97	3,56	4,16	4,46	5,35	5,94	6,78	8,88
3500	3,02	3,35	4,02	4,70	5,02	6,05	6,72	7,10	-
4000	3,24	3,59	4,32	5,05	5,40	6,48	7,21	8,05	-
5000	3,75	4,16	5,00	5,83	6,24	7,48	-	-	-
6000	4,19	4,67	5,59	6,53	6,99	-	-	-	-

The permissible performance figures for other timing belt widths can be calculated by multiplying the figures in the table above with the respective width factors.

Width Factors, Profile T 2.5

Belt Width	4	6	8	10	12
Width Factor	0.36	0.44	0.62	1.0	1.08

Width Factors, Profile T 5 and AT 5

Belt Width	6	10	16	20	25	32
Width Factor	0.58	1.0	1.42	1.83	2.33	3.05

Width Factors, Profile T 10 and AT 10

Belt Width	10	16	20	25	32	50	75
Width Factor	1.0	1.58	1.88	2.33	3.05	4.98	7.48

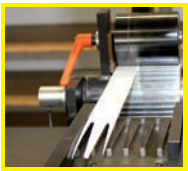

Timing Belt Welding
within 24h-Service

Profile 3M, Performance Figures in kW/25 mm Timing Belt Width

Speed of small pulley (min^{-1})	Teeth No. of Small Pulley														
	10	12	16	20	24	28	32	36	40	44	48	56	64	72	80
	Effective Diameter mm														
	9,55	11,46	15,28	19,10	22,92	26,74	30,56	34,38	38,20	42,02	45,84	53,48	61,12	68,75	76,39
20	0,005	0,006	0,009	0,012	0,015	0,017	0,020	0,022	0,025	0,028	0,030	0,035	0,040	0,045	0,050
40	0,009	0,012	0,017	0,022	0,027	0,032	0,037	0,042	0,047	0,052	0,056	0,066	0,075	0,084	0,093
60	0,013	0,017	0,024	0,032	0,039	0,046	0,054	0,061	0,068	0,075	0,082	0,095	0,109	0,122	0,135
100	0,020	0,026	0,038	0,050	0,062	0,074	0,085	0,096	0,107	0,118	0,129	0,151	0,172	0,193	0,214
200	0,036	0,048	0,071	0,093	0,115	0,137	0,158	0,179	0,200	0,220	0,240	0,280	0,320	0,358	0,397
400	0,065	0,087	0,130	0,171	0,212	0,252	0,291	0,330	0,369	0,406	0,444	0,517	0,590	0,660	0,730
600	0,091	0,122	0,184	0,244	0,302	0,359	0,415	0,471	0,525	0,579	0,632	0,736	0,838	0,937	1,035
800	0,115	0,155	0,235	0,312	0,387	0,461	0,533	0,604	0,674	0,742	0,810	0,942	1,070	1,194	1,315
1000	0,13	0,19	0,28	0,38	0,47	0,56	0,64	0,73	0,81	0,89	0,98	1,13	1,29	1,43	1,57
1400	0,18	0,24	0,37	0,50	0,62	0,74	0,86	0,97	1,08	1,18	1,29	1,49	1,67	1,85	2,01
1600	0,20	0,27	0,42	0,56	0,69	0,83	0,96	1,08	1,20	1,32	1,43	1,64	1,84	2,02	2,19
2000	0,23	0,33	0,59	0,67	0,84	0,99	1,14	1,29	1,43	1,56	1,69	1,92	2,13	2,31	2,45
2400	0,32	0,41	0,59	0,76	0,92	1,08	1,22	1,36	1,51	1,64	1,77	2,02	2,26	2,49	2,71
2850	0,35	0,46	0,67	0,86	1,04	1,22	1,39	1,55	1,71	1,86	2,00	2,29	2,55	2,81	3,06
3600	0,41	0,54	0,79	1,02	1,23	1,44	1,64	1,83	2,01	2,19	2,36	2,69	3,00	3,29	3,58
4000	0,44	0,58	0,85	1,09	1,33	1,55	1,765	1,97	2,16	2,35	2,54	2,89	3,22	3,53	3,83
5000	0,51	0,67	0,98	1,27	1,55	1,81	2,05	2,29	2,52	2,73	2,95	3,35	3,72	4,07	4,41
6000	0,56	0,75	1,11	1,44	1,75	2,04	2,32	2,58	2,84	3,08	3,31	3,76	4,17	4,56	4,93
8000	0,80	1,03	1,46	1,84	2,19	2,52	2,82	3,09	3,34	3,57	3,77	4,12	4,39	4,57	4,66
10000	0,89	1,16	1,65	2,09	2,48	2,83	3,15	3,43	3,68	3,89	4,07	4,34	4,47	4,47	4,33
12000	0,97	1,27	1,81	2,29	2,71	3,07	3,39	3,66	3,88	4,06	4,19	4,30	4,21	-	-
14000	1,03	1,36	1,94	2,45	2,88	3,24	3,50	3,78	3,96	4,07	4,11	3,99	-	-	-

Profile 5M, Performance Figures in kW/25 mm Timing Belt Width

Speed of small pulley (min^{-1})	Teeth No. of Small Pulley														
	14	16	18	20	24	28	32	36	40	44	48	56	64	72	80
	Effective Diameter mm														
	22,28	25,46	28,65	31,83	38,20	44,56	50,93	57,30	63,66	70,03	76,39	89,13	101,86	114,59	127,32
20	0,016	0,020	0,024	0,028	0,036	0,044	0,051	0,059	0,066	0,074	0,081	0,095	0,110	0,124	0,138
40	0,031	0,038	0,046	0,053	0,068	0,082	0,097	0,111	0,125	0,139	0,153	0,180	0,207	0,234	0,261
60	0,044	0,055	0,065	0,076	0,098	0,119	0,140	0,160	0,181	0,201	0,221	0,261	0,300	0,339	0,377
100	0,068	0,085	0,103	0,120	0,154	0,188	0,221	0,254	0,286	0,319	0,351	0,414	0,476	0,538	0,599
300	0,171	0,219	0,266	0,313	0,406	0,497	0,587	0,675	0,762	0,848	0,934	1,101	1,266	1,426	1,584
400	0,216	0,278	0,340	0,401	0,521	0,638	0,754	0,868	0,980	1,091	1,200	1,413	1,621	1,823	2,020
600	0,299	0,388	0,477	0,564	0,736	0,903	1,068	1,229	1,386	1,540	1,691	1,984	2,263	2,528	2,779
800	0,374	0,490	0,604	0,716	0,936	1,149	1,357	1,559	1,756	1,946	2,131	2,481	2,805	3,101	3,366
1000	0,44	0,58	0,72	0,86	1,12	1,38	1,62	1,86	2,09	2,31	2,51	2,90	3,23	3,52	3,75
1400	0,68	0,84	0,98	1,14	1,43	1,71	1,98	2,25	2,51	2,77	3,02	3,51	3,99	4,44	4,89
1600	0,76	0,90	1,10	1,26	1,59	1,90	2,21	2,51	2,80	3,08	3,36	3,91	4,43	4,93	5,41
2000	0,89	1,10	1,31	1,51	1,90	2,27	2,64	2,99	3,34	3,68	4,01	4,65	5,25	5,83	6,37
2400	1,03	1,27	1,50	1,74	2,19	2,62	3,04	3,45	3,85	4,24	4,61	5,33	6,00	6,63	7,21
2850	1,16	1,44	1,71	1,98	2,50	2,99	3,47	3,94	4,38	4,82	5,23	6,02	6,74	7,40	7,99
3600	1,37	1,70	2,04	2,36	2,98	3,57	4,13	4,67	5,19	5,68	6,15	7,01	7,75	8,39	8,90
4000	1,48	1,84	2,20	2,54	3,21	3,85	4,46	5,03	5,58	6,09	6,57	7,44	8,17	8,74	9,17
5000	1,71	2,14	2,57	2,98	3,76	4,49	5,18	5,81	6,40	6,94	7,42	8,22	8,77	9,05	9,04
6000	1,97	2,42	2,89	3,36	4,23	5,04	5,77	6,44	7,02	7,53	7,95	8,52	8,69	8,42	8,26
8000	2,63	3,14	3,53	4,00	4,92	5,62	6,38	6,65	6,96	7,12	7,12	7,02	-	-	-
10000	2,92	3,49	4,03	4,51	5,33	5,95	6,36	6,53	6,46	6,12	6,00	-	-	-	-
12000	3,32	3,73	4,27	4,74	5,46	5,86	5,93	5,62	-	-	-	-	-	-	-
14000	3,62	3,93	4,35	4,76	5,27	5,30	4,83	-	-	-	-	-	-	-	

The permissible performance figures for any timing belt width can be calculated by multiplying the figures in the table above with the respective width factors.

Width Factors 3M and 5M

Timing Belt Width	6	8	9	12	15	19	22	25	32	40	50
Width Factor	0,18	0,25	0,29	0,42	0,54	0,72	0,86	1,0	1,32	1,69	2,14

In this area of the table the service life might be shortened with increasing torque and a ratio close to 1 : 1. Please ask for more information.

Refers to cases where both circumstance come together. (shorter service life and no pulleys made from cast iron).

Speeds higher than 30 m/s.
Cast iron pulleys cannot be used in this range.

Profile 8M, Performance Figures in kW/25 mm Timing Belt Width

Speed of small pulley (min^{-1})	Teeth No. of small pulley / Effective Diameter mm														
	20	22	24	26	28	30	32	36	40	44	48	56	64	72	80
	50,93	56,02	61,12	66,21	71,30	76,39	81,49	91,67	101,86	112,05	122,23	142,60	162,97	183,35	203,72
10	0,02	0,02	0,03	0,03	0,03	0,04	0,04	0,05	0,06	0,07	0,08	0,09	0,11	0,13	0,14
20	0,04	0,05	0,05	0,06	0,07	0,08	0,09	0,10	0,12	0,14	0,15	0,19	0,22	0,25	0,28
50	0,10	0,12	0,14	0,16	0,18	0,20	0,22	0,26	0,30	0,34	0,38	0,46	0,54	0,62	0,70
100	0,19	0,23	0,27	0,31	0,35	0,39	0,43	0,51	0,59	0,67	0,75	0,91	1,07	1,22	1,38
200	0,38	0,46	0,54	0,62	0,70	0,77	0,85	1,01	1,17	1,32	1,48	1,79	2,10	2,41	2,72
400	0,74	0,89	1,05	1,21	1,36	1,52	1,67	1,98	2,29	2,59	2,90	3,51	4,11	4,72	5,32
500	0,91	1,11	1,30	1,49	1,69	1,88	2,07	2,46	2,84	3,22	3,60	4,35	5,10	5,85	6,59
600	1,09	1,32	1,55	1,78	2,01	2,24	2,47	2,93	3,38	3,84	4,29	5,18	6,07	6,97	7,84
800	1,43	1,74	2,04	2,35	2,65	2,95	3,26	3,86	4,46	5,05	5,64	6,81	7,97	9,14	10,28
1000	1,76	2,14	2,52	2,90	3,28	3,65	4,03	4,77	5,51	6,24	6,96	8,39	9,79	11,24	12,60
1200	2,09	2,55	3,00	3,45	3,89	4,34	4,78	5,66	6,53	7,39	8,24	9,91	11,53	13,24	14,80
1450	2,50	3,04	3,58	4,12	4,65	5,18	5,71	6,75	7,78	8,79	9,79	11,72	13,58	15,59	17,35
1800	3,05	3,71	4,37	5,03	5,68	6,32	6,96	8,21	9,44	10,64	11,81	14,05	16,14	18,54	20,45
2000	3,36	4,09	4,82	5,53	6,24	6,95	7,64	9,01	10,34	11,64	12,89	15,26	17,43	20,02	21,94
2500	4,10	4,99	5,88	6,74	7,60	8,44	9,27	10,88	12,43	13,91	15,30	17,84	19,98	22,94	24,62
2850	4,60	5,59	6,58	7,54	8,49	9,41	10,32	12,07	13,72	15,27	16,70	19,19	21,10	24,23	25,45
3000	4,80	5,94	6,87	7,87	8,85	9,81	10,75	12,54	14,23	15,79	17,22	19,64	21,39	24,56	25,52
3500	5,88	7,16	8,03	8,90	9,76	10,62	11,47	13,14	14,78	16,39	17,94	20,91	23,66	26,15	26,35
4000	7,07	8,16	9,15	10,13	11,10	12,06	13,01	14,88	16,69	18,45	20,14	23,29	26,11	27,55	-
4500	8,04	9,15	10,25	11,34	12,41	13,47	14,51	16,55	18,51	20,39	22,17	25,42	27,18	-	-
5000	8,91	10,12	11,33	12,52	13,68	14,83	15,96	18,14	20,22	22,18	24,02	27,05	-	-	-
6000	10,60	12,02	13,41	14,78	16,11	17,41	18,67	21,07	23,28	25,30	27,08	-	-	-	-

-

Profile 14M, Performance Figures in kW/25 mm Timing Belt Width

Speed of small pulley (min^{-1})	Teeth No. of small pulley / Effective Diameter mm														
	28	29	30	32	34	36	38	40	44	48	52	56	64	72	80
	124,78	129,23	133,69	142,60	151,51	160,43	169,34	178,25	196,08	213,90	231,73	249,55	285,21	320,86	356,51
10	0,12	0,13	0,14	0,16	0,18	0,20	0,22	0,24	0,27	0,32	0,34	0,36	0,41	0,46	0,50
20	0,24	0,25	0,27	0,32	0,36	0,41	0,46	0,50	0,55	0,59	0,68	0,73	0,82	0,91	1,00
40	0,50	0,55	0,59	0,64	0,73	0,82	0,91	0,96	1,10	1,19	1,32	1,42	1,64	1,83	2,05
60	0,73	0,78	0,87	1,00	1,10	1,23	1,37	1,46	1,64	1,83	2,01	2,15	2,47	2,74	3,06
100	1,23	1,32	1,42	1,64	1,87	2,15	2,28	2,42	2,74	3,01	3,29	3,56	4,11	4,61	5,11
200	2,47	2,65	2,88	3,29	3,74	4,25	4,61	4,89	5,43	6,03	6,62	7,17	8,17	9,18	10,23
300	3,33	3,61	3,93	4,52	5,11	5,80	6,26	6,62	7,40	8,17	8,90	9,68	11,23	12,83	14,52
400	4,15	4,52	4,84	5,57	6,35	7,17	7,72	8,17	9,09	10,05	10,96	11,83	13,70	15,62	17,58
500	4,89	5,30	5,71	6,57	7,44	8,40	9,09	9,60	10,64	11,69	12,74	13,74	15,89	17,99	20,18
600	5,57	6,03	6,53	7,49	8,49	9,54	10,27	10,87	12,01	13,20	14,34	15,48	17,81	20,09	22,47
700	6,21	6,72	7,23	8,29	9,41	10,57	11,35	12,01	13,23	14,52	15,75	16,96	19,40	21,75	24,29
800	6,85	7,35	7,94	9,09	10,32	11,60	12,47	13,15	14,47	15,84	17,17	18,45	21,00	23,56	26,12
1000	7,94	8,54	9,18	10,55	11,92	13,38	14,34	15,07	16,57	18,04	19,45	20,82	23,52	26,12	28,68
1200	8,90	9,59	10,32	11,78	13,29	14,89	15,94	16,76	18,31	19,86	21,32	22,69	25,39	27,90	30,27
1450	9,99	10,70	11,47	13,11	14,79	16,50	17,66	18,49	20,00	21,69	23,10	24,41	26,86	29,09	30,86
1600	10,55	11,32	12,15	13,84	15,57	17,35	18,54	19,36	20,96	22,51	23,88	25,11	27,40	29,18	30,55
2000	11,83	12,69	13,56	15,39	17,21	19,13	20,32	21,10	22,56	23,88	24,98	25,80	27,03	27,40	26,94
2400	13,74	14,16	14,61	16,44	18,36	20,27	21,37	22,00	23,15	24,00	24,57	24,75	24,25	-	-
2850	15,82	16,37	16,76	17,62	18,85	20,73	21,54	22,09	22,56	22,45	22,42	22,42	-	-	-
3000	16,65	17,12	17,54	18,40	19,02	20,82	21,60	21,83	22,10	22,33	22,46	22,19	-	-	-
3500	18,54	19,00	19,41	20,18	20,87	21,42	21,87	22,24	22,42	22,19	-	-	-	-	-
4000	20,18	20,59	20,91	21,60	22,05	22,33	22,47	22,42	22,19	-	-	-	-	-	-

The permissible performance figures for any timing belt width can be calculated by multiplying the figures in the table above with the respective width factors.

Width Factors 8M and 14 M

Belt Width	10	15	20	25	30*	30	40	50	65	85	100	115
Width Factor	0,35	0,56	0,77	1,0	1,14	1,21	1,46	2,1	2,76	3,66	4,32	4,98

* Only for profile 14M.

In this area of the table the service life might be shortened with increasing torque and a ratio close to 1 : 1. Please ask for more information.

Refers to cases where both circumstance come together. (shorter service life and no pulleys made from cast iron).

Speeds higher than 30 m/s.
Cast iron pulleys cannot be used here.

Standard Timing-Belt Drives (Inch Pitch)

Pitch MXL, Performance Figures in W for 1" Timing Belt Width

Speed of small pulley (min^{-1})	Teeth No. of Small Pulley												
	16	18	20	22	24	28	30	32	36	40	42	44	48
	Effective Diameter mm												
	10,35	11,64	12,94	14,23	15,52	18,11	19,40	20,70	23,29	25,87	27,17	28,46	31,05
100	9	19	11	12	13	16	17	18	20	22	24	25	27
200	18	20	22	25	27	31	34	36	40	45	47	49	54
400	36	40	45	49	54	63	67	72	81	90	94	99	108
600	54	61	67	74	81	94	101	108	121	135	142	148	162
800	72	81	90	99	108	126	135	144	162	180	189	198	216
1000	90	101	112	124	135	157	169	180	202	225	236	247	270
1200	108	121	135	148	162	189	202	216	243	270	283	297	324
1400	126	142	157	173	189	220	236	252	283	315	331	346	378
1600	144	162	180	198	216	252	270	288	324	360	378	396	432
2000	180	202	225	247	270	315	337	360	405	450	472	495	540
2500	225	253	281	309	337	394	422	450	506	562	590	618	675
3000	270	305	335	370	405	472	505	540	605	675	710	740	810
4000	360	405	450	495	540	630	675	720	810	899	944	989	1079
6000	540	605	675	742	810	945	1015	1078	1215	1350	1415	1485	1620
8000	720	810	900	990	1080	1260	1350	1440	1620	1800	1890	1980	2160
12000	1080	1215	1350	1485	1620	1890	2025	2160	2430	2700	2835	2970	3240
16000	1440	1620	1800	1980	2160	2520	2700	2880	3240	3555	3660	3760	4015
20000	1800	2025	2250	2475	2700	3150	3375	3555	3810	4020	4110	4190	4320

Pitch XL, Performance Figures in kW for 1" Timing Belt Width

Speed of small pulley (min^{-1})	Teeth No. of Small Pulley														
	10	12	14	16	18	20	22	24	28	30	32	36	40	44	48
	Effective Diameter mm														
	16,17	19,40	22,64	25,87	29,11	32,34	35,57	38,81	45,28	48,51	51,74	58,21	64,88	71,15	77,62
100	0,01	0,02	0,02	0,02	0,03	0,03	0,03	0,04	0,04	0,05	0,05	0,06	0,06	0,07	0,07
200	0,03	0,04	0,04	0,05	0,05	0,06	0,07	0,07	0,08	0,09	0,10	0,11	0,13	0,13	0,14
400	0,06	0,07	0,08	0,10	0,10	0,12	0,13	0,14	0,17	0,18	0,19	0,22	0,24	0,26	0,28
600	0,09	0,10	0,13	0,14	0,16	0,18	0,20	0,21	0,25	0,27	0,29	0,33	0,37	0,40	0,44
800	0,12	0,14	0,17	0,19	0,22	0,24	0,26	0,29	0,34	0,36	0,39	0,44	0,49	0,54	0,58
1000	0,15	0,18	0,21	0,24	0,27	0,30	0,33	0,36	0,42	0,45	0,49	0,54	0,60	0,67	0,73
1200	0,18	0,21	0,25	0,29	0,32	0,36	0,40	0,43	0,50	0,54	0,58	0,65	0,73	0,80	0,87
1400	0,21	0,25	0,29	0,34	0,38	0,42	0,46	0,50	0,59	0,63	0,68	0,76	0,85	0,93	1,01
1600	0,24	0,29	0,34	0,39	0,43	0,48	0,53	0,58	0,67	0,72	0,77	0,87	0,96	1,06	1,15
2000	0,30	0,36	0,42	0,48	0,54	0,60	0,66	0,72	0,85	0,90	0,96	1,08	1,20	1,31	1,43
2400	0,36	0,43	0,50	0,58	0,65	0,72	0,79	0,87	1,01	1,08	1,15	1,29	1,43	1,56	1,69
2800	0,42	0,51	0,59	0,68	0,76	0,85	0,93	1,01	1,17	1,26	1,34	1,49	1,65	1,80	1,95
3200	0,48	0,58	0,67	0,77	0,87	0,96	1,05	1,15	1,33	1,43	1,51	1,69	1,86	2,03	2,19
3600	0,54	0,65	0,76	0,87	0,97	1,07	1,18	1,29	1,49	1,59	1,69	1,88	2,07	2,25	2,42
4000	0,60	0,72	0,85	0,96	1,07	1,20	1,31	1,43	1,64	1,75	1,86	2,07	2,27	2,45	2,63
4400	0,66	0,79	0,92	1,05	1,18	1,31	1,43	1,56	1,80	1,92	2,03	2,25	2,46	2,65	2,83
5000	0,75	0,90	1,04	1,20	1,34	1,48	1,62	1,77	2,02	2,15	2,27	2,50	2,72	2,92	3,10
6000	0,90	1,08	1,26	1,43	1,59	1,76	1,92	2,07	2,38	2,51	2,63	2,88	3,10	3,27	3,41

The permissible performance figures for any timing belt width can be calculated by multiplying the figures in the table above with the respective width factors.

Width Factors, Inch Pitch

Timing Belt Width	1/4"	3/8"	7/16"	1/2"	5/8"	3/4"	7/8"	1"	1 1/4"	1 1/2"	1 3/4"	2"
Width Factor	0,22	0,28	0,35	0,42	0,57	0,71	0,86	1,00	1,29	1,56	1,84	2,14

In this area of the table the service life might be shortened with increasing torque and a ratio close to 1 : 1. Please ask for more information.

Standard Timing-Belt Drives (Inch Pitch)

Pitch L, Performance Figures in kW for 1" Timing Belt Width

Speed of small pulley (min^{-1})	Teeth No. of Small Pulley: 10	12	14	16	18	20	22	26	30	32	36	40	44	48
	Effective Diameter mm: 30,32	36,38	42,45	48,51	54,57	60,64	66,70	78,83	90,96	97,02	109,15	121,28	133,40	145,53
100	0,04	0,04	0,05	0,06	0,07	0,07	0,09	0,10	0,12	0,13	0,14	0,15	0,17	0,18
200	0,07	0,10	0,11	0,13	0,14	0,15	0,17	0,20	0,23	0,24	0,28	0,31	0,34	0,37
300	0,12	0,14	0,16	0,18	0,21	0,23	0,25	0,30	0,35	0,37	0,41	0,46	0,51	0,55
400	0,15	0,18	0,21	0,24	0,28	0,31	0,34	0,40	0,46	0,49	0,55	0,61	0,68	0,74
500	0,19	0,23	0,27	0,31	0,35	0,38	0,42	0,50	0,57	0,61	0,69	0,76	0,84	0,91
600	0,23	0,27	0,32	0,37	0,41	0,46	0,51	0,60	0,70	0,74	0,82	0,91	1,00	1,10
700	0,27	0,32	0,38	0,43	0,49	0,54	0,59	0,70	0,80	0,85	0,96	1,07	1,17	1,27
800	0,31	0,37	0,43	0,49	0,55	0,61	0,68	0,79	0,91	0,97	1,10	1,21	1,33	1,45
1000	0,38	0,46	0,54	0,61	0,69	0,76	0,84	0,99	1,14	1,21	1,36	1,51	1,65	1,79
1200	0,46	0,55	0,65	0,74	0,82	0,91	1,00	1,18	1,36	1,45	1,63	1,79	1,96	2,13
1400	0,54	0,64	0,75	0,85	0,96	1,07	1,17	1,38	1,58	1,68	1,88	2,07	2,27	2,46
1600	0,61	0,74	0,85	0,97	1,10	1,21	1,33	1,57	1,79	1,91	2,13	2,35	2,56	2,76
1800	0,69	0,82	0,96	1,10	1,23	1,36	1,49	1,75	2,01	2,13	2,38	2,61	2,84	3,06
2000	0,76	0,91	1,07	1,21	1,36	1,51	1,65	1,93	2,21	2,35	2,62	2,86	3,11	3,39
2400	0,92	1,10	1,27	1,45	1,63	1,79	1,96	2,29	2,62	2,76	3,07	3,34	3,60	3,83
2600	0,99	1,18	1,38	1,57	1,75	1,93	2,12	2,47	2,80	2,96	3,26	3,55	3,80	4,03
3000	1,15	1,36	1,58	1,79	2,01	2,21	2,42	2,80	3,16	3,34	3,65	3,93	4,18	4,37
3200	1,22	1,45	1,68	1,91	2,13	2,35	2,56	2,96	3,34	3,51	3,82	4,10	4,32	4,49
3600	1,37	1,63	1,86	2,13	2,38	2,61	2,84	3,27	3,65	3,83	4,13	4,38	4,54	4,64
4000	1,51	1,79	2,08	2,35	2,62	2,86	3,11	3,55	3,93	4,10	4,37	4,57	4,65	4,64
4600	1,74	2,05	2,37	2,67	2,95	3,22	3,48	3,93	4,28	4,42	4,60	4,67	4,58	4,33
5000	1,88	2,21	2,55	2,88	3,17	3,44	3,71	4,14	4,46	4,56	4,66	4,60	4,35	3,90

Pitch H, Performance Figures in kW for 1" Timing Belt Width

Speed of small pulley (min^{-1})	Teeth No. of Small Pulley: 14	16	18	20	22	24	26	28	30	32	36	40	44	48
	Effective Diameter mm: 56,60	64,68	76,81	80,85	88,94	97,02	105,11	113,19	121,28	129,36	145,53	161,70	177,87	194,04
100	0,18	0,21	0,24	0,25	0,29	0,31	0,34	0,37	0,39	0,42	0,47	0,52	0,57	0,63
200	0,37	0,42	0,47	0,52	0,57	0,63	0,68	0,73	0,78	0,83	0,93	1,04	1,15	1,25
300	0,54	0,63	0,71	0,78	0,86	0,93	1,01	1,10	1,17	1,25	1,40	1,56	1,71	1,87
400	0,73	0,83	0,93	1,04	1,15	1,25	1,35	1,46	1,56	1,66	1,87	2,07	2,28	2,49
500	0,91	1,04	1,17	1,30	1,43	1,56	1,69	1,82	1,95	2,07	2,33	2,59	2,85	3,10
600	1,10	1,25	1,40	1,56	1,71	1,87	2,02	2,18	2,33	2,48	2,79	3,10	3,41	3,71
700	1,27	1,46	1,64	1,82	2,00	2,18	2,37	2,54	2,72	2,90	3,26	3,61	3,97	4,32
800	1,46	1,66	1,87	2,07	2,28	2,49	2,69	2,90	3,10	3,31	3,71	4,12	4,52	4,92
900	1,64	1,87	2,10	2,33	2,57	2,79	3,02	3,26	3,49	3,71	4,17	4,63	5,07	5,51
1000	1,82	2,07	2,33	2,59	2,85	3,10	3,36	3,61	3,87	4,12	4,63	5,12	5,61	6,10
1100	2,00	2,28	2,57	2,85	3,13	3,41	3,69	3,97	4,24	4,52	5,07	5,61	6,15	6,68
1200	2,18	2,49	2,79	3,10	3,41	3,71	4,01	4,32	4,63	4,92	5,51	6,10	6,68	7,25
1400	2,55	2,90	3,26	3,61	3,96	4,32	4,67	5,02	5,37	5,72	6,39	7,06	7,71	8,35
1600	2,92	3,31	3,71	4,12	4,52	4,92	5,32	5,71	6,10	6,49	7,25	7,99	8,71	9,41
1800	3,29	3,71	4,17	4,62	5,07	5,51	5,96	6,39	6,82	7,25	8,08	8,89	9,67	10,43
2000	3,65	4,12	4,62	5,12	5,61	6,10	6,58	7,05	7,53	7,99	8,90	9,76	10,59	11,37
2400	4,38	4,92	5,51	6,10	6,68	7,24	7,81	8,36	8,89	9,41	10,43	11,37	12,25	13,06
2800	5,08	5,71	6,39	7,05	7,71	8,35	8,98	9,60	10,18	10,74	11,83	12,80	13,68	14,43
3200	5,79	6,49	7,24	7,98	8,71	9,40	10,09	10,76	11,37	11,96	13,07	14,01	14,81	15,43
3600	6,48	7,25	8,08	8,88	9,68	10,41	11,14	11,83	12,46	13,05	14,13	14,98	15,62	16,01
4000	7,15	7,99	8,89	9,74	10,59	11,35	12,10	12,82	13,43	14,00	15,00	15,67	16,05	16,10
4600	8,15	9,07	10,05	10,96	11,86	12,63	13,40	14,09	14,63	15,13	15,87	16,12	15,93	15,24

The permissible performance figures for any timing belt width can be calculated by multiplying the figures in the table above with the respective width factors.

Width Factors, Inch Pitch

Timing Belt Width	3/8"	7/16"	1/2"	5/8"	3/4"	7/8"	1"	1 1/4"	1 1/2"	1 3/4"	2"
Width Factor	0,28	0,35	0,42	0,57	0,71	0,86	1,00	1,29	1,56	1,84	2,14

In this area of the table the service life might be shortened with increasing torque and a ratio close to 1 : 1. Please ask for more information.

Speeds higher than 30 m/s.
Cast iron pulleys cannot be used here.

T Pulleys with Metric Pitch and 2 Flanges Made from Polyacetal

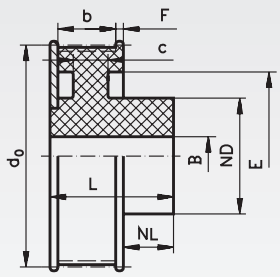



Material: Polyacetal in injection-moulded version, colour black. Bores machined. High hardness and low coefficient of friction which means they can be used in various set-ups, e.g. also under water. Material reference values see page 821.

Ordering Details: e.g.: Product No. 160 512 00, Pulley, Pitch T 2.5, 12 Teeth, Timing Belt Width 6 mm

Profile T 2.5, Timing Belt Width 6 mm

Product No. Timing Belt Width 6 mm	Number of teeth	Outside Ø Pulley mm	Outside Ø Flange mm	d_0 mm	ND mm	NL mm	E mm	F mm	b mm	L mm	c mm	B mm	Weight g
160 512 00	12	9,0	10,6	9,56	9	4,5	-	1	7,5	14	-	3,5	1,0
160 513 00	13	9,8	11,4	10,34	9	4,5	-	1	7,5	14	-	3,5	1,1
160 514 00	14	10,6	12,2	11,14	9	4,5	-	1	7,5	14	-	3,5	1,4
160 515 00	15	11,4	13,0	11,94	9	4,5	-	1	7,5	14	-	3,5	1,6
160 516 00	16	12,2	13,8	12,73	9	4,5	-	1	7,5	14	-	3,5	1,8
160 517 00	17	13,0	14,6	13,53	9	4,5	-	1	7,5	14	-	3,5	2,2
160 518 00	18	13,8	15,4	14,32	10	5,5	-	1	7,5	15	-	4	2,4
160 519 00	19	14,6	16,2	15,12	10	5,5	-	1	7,5	15	-	4	2,9
160 520 00	20	15,4	17,0	15,92	12	5,5	-	1	7,5	15	-	4	3,2
160 522 00	22	17,0	18,6	17,51	12	5,5	-	1	7,5	15	-	4	3,8
160 525 00	25	19,35	20,95	19,95	12	5,5	14,0	1	7,5	15	4,5	5	4,5
160 528 00	28	21,75	23,35	22,35	12	5,5	16,2	1	7,5	15	4,5	5	5,1
160 532 00	32	24,95	26,55	25,55	15	6,5	18,5	1	7,5	16	4,5	5	6,8
160 536 00	36	28,15	29,75	28,65	15	6,5	21,8	1	7,5	16	4,5	5	8,0
160 540 00	40	31,3	32,9	31,90	18	6,5	25,0	1	7,5	16	3,5	8	9,4
160 548 00	48	37,7	39,3	38,30	18	6,5	31,6	1	7,5	16	3,5	8	11,8
160 560 00	60	47,25	48,85	47,85	18	6,5	41,0	1	7,5	16	3,5	8	16,5
160 572 00	72	56,8	58,4	57,30	18	6,5	49,5	1	7,5	16	4,5	8	26,1
160 584 00	84	66,35	67,95	66,85	18	6,5	59,0	1	7,5	16	4,5	8	33,1
160 596 00	96	75,9	77,5	76,39	18	6,5	68,0	1	7,5	16	4,5	8	42,2

Profile T 5, Timing Belt Width 10 mm

Product No. Timing Belt Width 10 mm	Number of teeth	Outside Ø Pulley mm	Outside Ø Flange mm	d_0 mm	ND mm	NL mm	E mm	F mm	b mm	L mm	c mm	B mm	Weight g
162 512 00	12	18,25	20,65	19,10	15	8	-	1,25	11,5	22	-	5	6,2
162 513 00	13	19,85	22,25	20,69	15	8	-	1,25	11,5	22	-	5	7,2
162 514 00	14	21,45	23,85	22,28	15	8	-	1,25	11,5	22	-	5	8,1
162 515 00	15	23,05	25,45	23,87	16	8	19	1,25	11,5	22	7	6	8,6
162 516 00	16	24,60	27,00	25,46	16	8	19	1,25	11,5	22	7	6	9,6
162 517 00	17	26,20	28,60	27,06	16	8	19	1,25	11,5	22	7	6	10,8
162 518 00	18	27,80	30,20	28,65	16	8	19	1,25	11,5	22	7	6	12,2
162 519 00	19	29,40	31,80	30,24	16	8	22	1,25	11,5	22	6	8	12,3
162 520 00	20	31,00	33,40	31,83	16	8	25	1,25	11,5	22	6	8	12,5
162 522 00	22	34,15	36,55	35,01	18	8	27	1,25	11,5	22	6	8	15,3
162 525 00	25	38,95	41,35	39,79	18	8	32	1,25	11,5	22	6	8	18,8
162 528 00	28	43,75	46,15	44,56	18	8	36	1,25	11,5	22	6	10	22,0
162 532 00	32	50,10	52,50	50,93	18	8	42	1,25	11,5	22	6	10	27,7
162 536 00	36	56,45	58,85	57,30	18	8	47	1,25	11,5	22	6	10	34,9
162 540 00	40	62,85	65,25	63,66	18	8	53	1,25	11,5	22	6	10	41,9
162 548 00	48	75,55	77,95	76,39	18	8	66	1,25	11,5	22	6	10	57,7
162 560 00	60	94,65	97,05	95,49	18	8	85	1,25	11,5	22	6	10	86,5
162 572 00	72	113,75	116,15	114,59	18	8	104	1,25	11,5	22	6	10	126,5
162 584 00	84	132,90	135,30	133,69	18	8	123	1,25	11,5	22	6	10	169,6

Note regarding pulleys made from polyacetal

Inside these injection-moulded parts are some cavities caused by production. These parts should therefore not be drilled too deep. With larger bores or when grooving the cavities might become visible. This often does not affect the functionality.



Reworking within 24h-service possible. Custom made parts on request.

T Pulleys, Pitch 2.5 mm Made from Aluminium

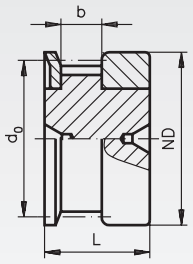

Type 0F

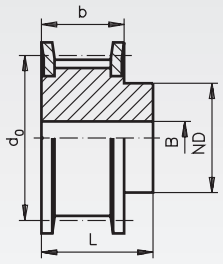

Type 1F

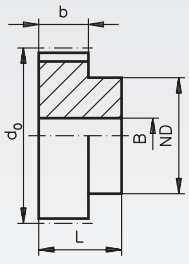

Type 2

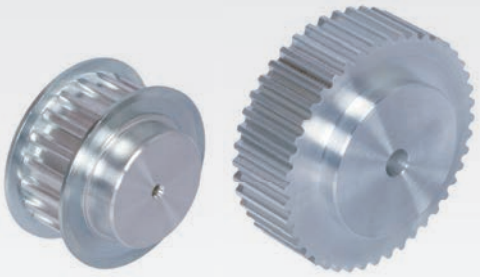

Material: Aluminium 6082-T6, UNI 9006. Flanges zinc-plated steel.

Ordering Details: e.g.: Product No. 160 212 00, Pulley, Pitch T2.5, 12 Teeth, Timing Belt Width 6 mm

Profile T 2.5, Timing Belt Width 6 mm

Product No. Timing Belt Width 6 mm	Type	Number of teeth	Type	Outside Ø Pulley mm	Outside Ø Flange mm	d_0 mm	ND mm	b mm	L mm	Pilot Hole B mm	Weight g
160 212 00	16 T2,5/12-2	12	0F	9,00	13,0	9,56	12	9	16	-	3
160 214 00	16 T2,5/14-2	14	0F	10,60	15,0	11,14	14	9	16	-	4
160 215 00	16 T2,5/15-2	15	0F	11,40	15,0	11,94	15	9	16	-	5
160 216 00	16 T2,5/16-2	16	0F	12,20	16,0	12,73	16	9	16	-	5
160 218 00	16 T2,5/18-2	18	1F	13,80	18,0	14,32	10	10	16	3	6
160 219 00	16 T2,5/19-2	19	1F	14,60	18,0	15,12	10	10	16	3	7
160 220 00	16 T2,5/20-2	20	1F	15,40	19,5	15,92	11	10	16	3	8
160 222 00	16 T2,5/22-2	22	1F	17,00	23,0	17,51	11	10	16	3	9
160 224 00	16 T2,5/24-2	24	1F	18,55	23,0	19,15	12	10	16	3	12
160 225 00	16 T2,5/25-2	25	1F	19,35	23,0	19,95	13	10	16	3	13
160 226 00	16 T2,5/26-2	26	1F	20,15	25,0	20,75	14	10	16	4	14
160 228 00	16 T2,5/28-2	28	1F	21,75	25,0	22,35	14	10	16	4	16
160 230 00	16 T2,5/30-2	30	1F	23,35	28,0	23,95	16	10	16	6	18
160 232 00	16 T2,5/32-2	32	1F	24,95	32,0	25,55	16	10	16	6	20
160 236 00	16 T2,5/36-2	36	1F	28,10	36,0	28,75	20	10	16	6	26
160 240 00	16 T2,5/40-2	40	1F	31,30	38,0	31,90	22	10	16	6	32
160 244 00	16 T2,5/44-0	44	2	34,50	-	35,10	24	10	16	6	40
160 248 00	16 T2,5/48-0	48	2	37,70	-	38,30	26	10	16	6	48
160 260 00	16 T2,5/60-0	60	2	47,25	-	47,85	34	10	16	8	73

Profile T 2.5, Timing Belt Width 10 mm

Product No. Timing Belt Width 10 mm	Type	Number of teeth	Type	Outside Ø Pulley mm	Outside Ø Flange mm	d_0 mm	ND mm	b mm	L mm	Pilot Hole B mm	Weight g
160 312 00	20 T2,5/12-2	12	0F	9,00	13,0	9,56	12	13	20	-	4
160 314 00	20 T2,5/14-2	14	0F	10,60	15,0	11,14	14	13	20	-	6
160 315 00	20 T2,5/15-2	15	0F	11,40	15,0	11,94	15	13	20	-	7
160 316 00	20 T2,5/16-2	16	0F	12,20	16,0	12,73	16	13	20	-	7
160 318 00	20 T2,5/18-2	18	1F	13,80	18,0	14,32	10	14	20	3	8
160 319 00	20 T2,5/19-2	19	1F	14,60	18,0	15,12	10	14	20	3	10
160 320 00	20 T2,5/20-2	20	1F	15,40	19,5	15,92	11	14	20	3	11
160 322 00	20 T2,5/22-2	22	1F	17,00	23,0	17,51	11	14	20	3	13
160 324 00	20 T2,5/24-2	24	1F	18,55	23,0	19,15	12	14	20	3	17
160 325 00	20 T2,5/25-2	25	1F	19,35	23,0	19,95	13	14	20	3	18
160 326 00	20 T2,5/26-2	26	1F	20,15	25,0	20,75	14	14	20	4	20
160 328 00	20 T2,5/28-2	28	1F	21,75	25,0	22,35	14	14	20	4	22
160 330 00	20 T2,5/30-2	30	1F	23,35	28,0	23,95	16	14	20	6	25
160 332 00	20 T2,5/32-2	32	1F	24,95	32,0	25,55	16	14	20	6	28
160 336 00	20 T2,5/36-2	36	1F	28,10	36,0	28,75	20	14	20	6	36
160 340 00	20 T2,5/40-2	40	1F	31,30	38,0	31,90	22	14	20	6	45
160 344 00	20 T2,5/44-0	44	2	34,50	-	35,10	24	14	20	6	56
160 348 00	20 T2,5/48-0	48	2	37,70	-	38,30	26	14	20	6	67
160 360 00	20 T2,5/60-0	60	2	47,25	-	47,85	34	14	20	8	102



Reworking within 24h-service possible. Custom made parts on request.

T Pulleys, Pitch 5 mm from Aluminium

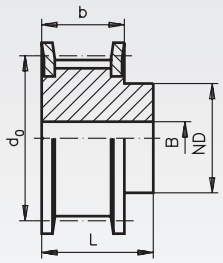

Type 1F

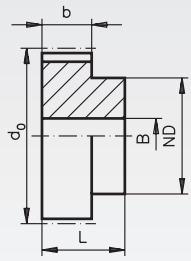

Type 2

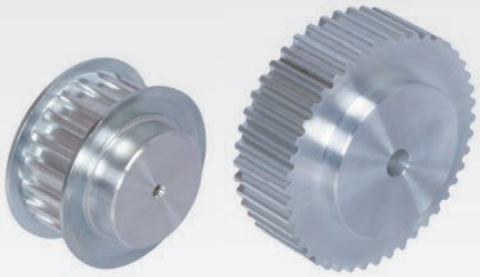

Material: Aluminium 6082-T6, UNI 9006. Flanges zinc-plated steel.

Ordering Details: e.g.: Product No. 162 210 00, Pulley, Pitch T5, 10 Teeth, Timing Belt Width 10 mm

Profile T 5, Timing Belt Width 10 mm

Product No. Timing Belt Width 10 mm	Type	Number of teeth	Type	Outside Ø Pulley mm	Outside Ø Flange mm	d_0 mm	ND mm	b mm	L mm	Pilot Hole B mm	Weight g
162 210 00	21 T5/10-2	10	1F	15,05	19,5	15,92	8	15	21	-	12
162 212 00	21 T5/12-2	12	1F	18,25	23,0	19,10	10	15	21	-	16
162 214 00	21 T5/14-2	14	1F	21,45	25,0	22,28	13	15	21	-	19
162 215 00	21 T5/15-2	15	1F	23,05	28,0	23,87	16	15	21	-	21
162 216 00	21 T5/16-2	16	1F	24,60	32,0	25,46	18	15	21	-	25
162 218 00	21 T5/18-2	18	1F	27,80	32,0	28,65	20	15	21	-	31
162 219 00	21 T5/19-2	19	1F	29,40	36,0	30,24	22	15	21	-	36
162 220 00	21 T5/20-2	20	1F	31,00	36,0	31,83	23	15	21	-	38
162 222 00	21 T5/22-2	22	1F	34,15	38,0	35,01	24	15	21	-	46
162 224 00	21 T5/24-2	24	1F	37,40	42,0	38,20	26	15	21	-	54
162 225 00	21 T5/25-2	25	1F	38,95	44,0	39,79	26	15	21	-	58
162 226 00	21 T5/26-2	26	1F	40,60	44,0	41,38	26	15	21	-	62
162 227 00	21 T5/27-2	27	1F	42,20	48,0	42,97	30	15	21	8	64
162 228 00	21 T5/28-2	28	1F	43,75	48,0	44,56	32	15	21	8	71
162 230 00	21 T5/30-2	30	1F	46,95	51,0	47,75	34	15	21	8	75
162 232 00	21 T5/32-2	32	1F	50,10	54,0	50,93	38	15	21	8	88
162 236 00	21 T5/36-2	36	1F	56,45	64,0	57,30	38	15	21	8	114
162 240 00	21 T5/40-2	40	1F	62,85	66,0	63,66	40	15	21	8	138
162 242 00	21 T5/42-2	42	1F	66,00	71,0	66,84	40	15	21	8	180
162 244 00	21 T5/44-0	44	2	69,20	-	70,03	45	15	21	8	185
162 248 00	21 T5/48-0	48	2	75,55	-	76,39	50	15	21	8	200
162 260 00	21 T5/60-0	60	2	94,65	-	95,49	65	15	21	8	307

Profile T 5, Timing Belt Width 16 mm

Product No. Timing Belt Width 16 mm	Type	Number of teeth	Type	Outside Ø Pulley mm	Outside Ø Flange mm	d_0 mm	ND mm	b mm	L mm	Pilot Hole B mm	Weight g
162 310 00	27 T5/10-2	10	1F	15,05	19,5	15,92	8	21	27	-	16
162 312 00	27 T5/12-2	12	1F	18,25	23,0	19,10	10	21	27	-	22
162 314 00	27 T5/14-2	14	1F	21,45	25,0	22,28	13	21	27	-	26
162 315 00	27 T5/15-2	15	1F	23,05	28,0	23,87	16	21	27	-	29
162 316 00	27 T5/16-2	16	1F	24,60	32,0	25,46	18	21	27	-	35
162 318 00	27 T5/18-2	18	1F	27,80	32,0	28,65	20	21	27	-	43
162 319 00	27 T5/19-2	19	1F	29,40	36,0	30,24	22	21	27	-	49
162 320 00	27 T5/20-2	20	1F	31,00	36,0	31,83	23	21	27	-	53
162 322 00	27 T5/22-2	22	1F	34,15	38,0	35,01	24	21	27	-	54
162 324 00	27 T5/24-2	24	1F	37,40	42,0	38,20	26	21	27	-	76
162 325 00	27 T5/25-2	25	1F	38,95	44,0	39,79	26	21	27	-	81
162 326 00	27 T5/26-2	26	1F	40,60	44,0	41,38	26	21	27	-	85
162 327 00	27 T5/27-2	27	1F	42,20	48,0	42,97	30	21	27	8	90
162 328 00	27 T5/28-2	28	1F	43,75	48,0	44,56	32	21	27	8	92
162 330 00	27 T5/30-2	30	1F	46,95	51,0	47,75	34	21	27	8	105
162 332 00	27 T5/32-2	32	1F	50,10	54,0	50,93	38	21	27	8	123
162 336 00	27 T5/36-2	36	1F	56,45	64,0	57,30	38	21	27	8	160
162 340 00	27 T5/40-2	40	1F	62,85	66,0	63,66	40	21	27	8	193
162 342 00	27 T5/42-2	42	1F	66,00	71,0	66,84	40	21	27	8	205
162 344 00	27 T5/44-0	44	2	69,20	-	70,03	45	21	27	8	228
162 348 00	27 T5/48-0	48	2	75,55	-	76,39	50	21	27	8	280
162 360 00	27 T5/60-0	60	2	94,65	-	95,49	65	21	27	8	430

T Pulleys, Pitch 5 mm Made from Aluminium

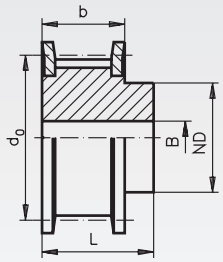

Type 1F

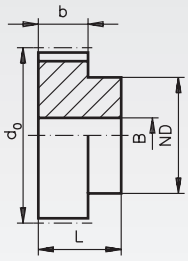

Type 2

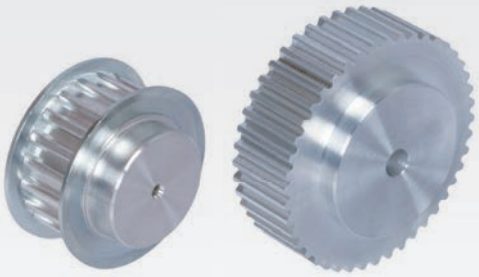

Material: Aluminium 6082-T6, UNI 9006. Flanges zinc-plated steel.

Ordering Details: e.g.: Product No. 162 410 00, Pulley, Pitch T5, 10 Teeth, Timing Belt Width 25 mm

Profile T 5, Timing Belt Width 25 mm

Product No. Timing Belt Width 25 mm	Type	Number of teeth	Type	Outside Ø Pulley mm	Outside Ø Flange mm	d_0 mm	ND mm	b mm	L mm	Pilot Hole B mm	Weight g
162 410 00	36 T5/10-2	10	1F	15,05	19,5	15,92	8	30	36	-	20
162 412 00	36 T5/12-2	12	1F	18,25	23,0	19,10	10	30	36	-	30
162 414 00	36 T5/14-2	14	1F	21,45	25,0	22,28	13	30	36	-	40
162 415 00	36 T5/15-2	15	1F	23,05	28,0	23,87	16	30	36	-	40
162 416 00	36 T5/16-2	16	1F	24,60	32,0	25,46	18	30	36	-	50
162 418 00	36 T5/18-2	18	1F	27,80	32,0	28,65	20	30	36	-	60
162 419 00	36 T5/19-2	19	1F	29,40	36,0	30,24	22	30	36	-	70
162 420 00	36 T5/20-2	20	1F	31,00	36,0	31,83	23	30	36	-	80
162 422 00	36 T5/22-2	22	1F	34,15	38,0	35,01	24	30	36	-	80
162 424 00	36 T5/24-2	24	1F	37,40	42,0	38,20	26	30	36	-	110
162 425 00	36 T5/25-2	25	1F	38,95	44,0	39,79	26	30	36	-	120
162 426 00	36 T5/26-2	26	1F	40,60	44,0	41,38	26	30	36	-	120
162 427 00	36 T5/27-2	27	1F	42,20	48,0	42,97	30	30	36	8	130
162 428 00	36 T5/28-2	28	1F	43,75	48,0	44,56	32	30	36	8	140
162 430 00	36 T5/30-2	30	1F	46,95	51,0	47,75	34	30	36	8	150
162 432 00	36 T5/32-2	32	1F	50,10	54,0	50,93	38	30	36	8	180
162 436 00	36 T5/36-2	36	1F	56,45	64,0	57,30	38	30	36	8	230
162 440 00	36 T5/40-2	40	1F	62,85	66,0	63,66	40	30	36	8	280
162 442 00	36 T5/42-2	42	1F	66,00	71,0	66,84	40	30	36	8	290
162 444 00	36 T5/44-0	44	2	69,20	-	70,03	45	30	36	8	310
162 448 00	36 T5/48-0	48	2	75,55	-	76,39	50	30	36	8	400
162 460 00	36 T5/60-0	60	2	94,65	-	95,49	65	30	36	8	610

Profile T 5, Timing Belt Width 32 mm

Product No. Timing Belt Width 32 mm	Type	Number of teeth	Type	Outside Ø Pulley mm	Outside Ø Flange mm	d_0 mm	ND mm	b mm	L mm	Pilot Hole B mm	Weight g
162 110 00	46 T5/10-2	10	1F	15,05	19,5	15,92	8	40	46	-	30
162 112 00	46 T5/12-2	12	1F	18,25	23,0	19,10	10	40	46	-	42
162 114 00	46 T5/14-2	14	1F	21,45	25,0	22,28	13	40	46	-	49
162 115 00	46 T5/15-2	15	1F	23,05	28,0	23,87	16	40	46	-	55
162 116 00	46 T5/16-2	16	1F	24,60	32,0	25,46	18	40	46	-	66
162 118 00	46 T5/18-2	18	1F	27,80	32,0	28,65	20	40	46	-	81
162 119 00	46 T5/19-2	19	1F	29,40	36,0	30,24	22	40	46	-	93
162 120 00	46 T5/20-2	20	1F	31,00	36,0	31,83	23	40	46	-	100
162 122 00	46 T5/22-2	22	1F	34,15	38,0	35,01	24	40	46	-	102
162 124 00	46 T5/24-2	24	1F	37,40	42,0	38,20	26	40	46	-	144
162 125 00	46 T5/25-2	25	1F	38,95	44,0	39,79	26	40	46	-	153
162 126 00	46 T5/26-2	26	1F	40,60	44,0	41,38	26	40	46	-	161
162 127 00	46 T5/27-2	27	1F	42,20	48,0	42,97	30	40	46	8	170
162 128 00	46 T5/28-2	28	1F	43,75	48,0	44,56	32	40	46	8	174
162 130 00	46 T5/30-2	30	1F	46,95	51,0	47,75	34	40	46	8	198
162 132 00	46 T5/32-2	32	1F	50,10	54,0	50,93	38	40	46	8	232
162 136 00	46 T5/36-2	36	1F	56,45	64,0	57,30	38	40	46	8	302
162 140 00	46 T5/40-2	40	1F	62,85	66,0	63,66	40	40	46	8	365
162 142 00	46 T5/42-2	42	1F	66,00	71,0	66,84	40	40	46	8	387
162 144 00	46 T5/44-0	44	2	69,20	-	70,03	45	40	46	8	431
162 148 00	46 T5/48-0	48	2	75,55	-	76,39	50	40	46	8	529
162 160 00	46 T5/60-0	60	2	94,65	-	95,49	65	40	46	8	813

T Pulleys, Pitch 10 mm Made from Aluminium

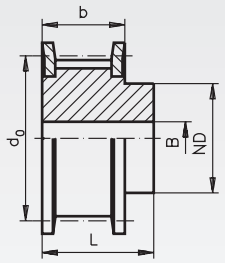

Type 1F

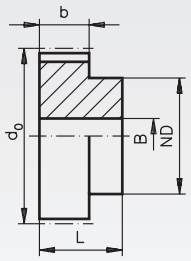

Type 2

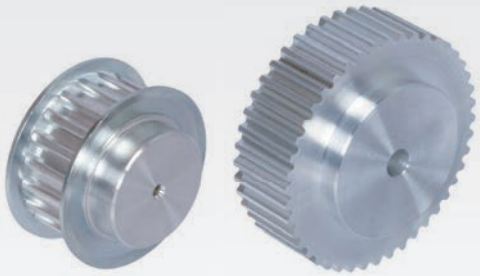

Material: Aluminium 6082-T6, UNI 9006. Flanges zinc-plated steel.

Ordering Details: e.g.: Product No. 164 212 00, Pulley, Pitch T10, 12 Teeth, Timing Belt Width 16 mm

Profile T 10, Timing Belt Width 16 mm

Product No. Timing Belt Width 16 mm	Type	Number of teeth	Type	Outside Ø Pulley mm	Outside Ø Flange mm	d_0 mm	ND mm	b mm	L mm	Pilot Hole B mm	Weight g
164 212 00	31 T10/12-2	12	1F	36,35	42	38,20	28	21	31	6	76
164 214 00	31 T10/14-2	14	1F	42,70	48	44,56	32	21	31	8	104
164 215 00	31 T10/15-2	15	1F	45,90	51	47,75	32	21	31	8	116
164 216 00	31 T10/16-2	16	1F	49,10	54	50,93	35	21	31	8	134
164 218 00	31 T10/18-2	18	1F	55,45	60	57,30	40	21	31	8	167
164 219 00	31 T10/19-2	19	1F	58,65	66	60,48	44	21	31	8	184
164 220 00	31 T10/20-2	20	1F	61,80	66	63,66	46	21	31	8	208
164 222 00	31 T10/22-2	22	1F	68,20	75	70,03	52	21	31	8	253
164 224 00	31 T10/24-2	24	1F	74,55	83	76,39	58	21	31	8	288
164 225 00	31 T10/25-2	25	1F	77,75	83	79,58	60	21	31	8	310
164 226 00	31 T10/26-2	26	1F	80,90	87	82,76	60	21	31	8	357
164 227 00	31 T10/27-2	27	1F	84,10	91	85,94	60	21	31	8	364
164 228 00	31 T10/28-2	28	1F	87,25	93	89,13	60	21	31	8	401
164 230 00	31 T10/30-2	30	1F	93,65	97	95,49	60	21	31	8	441
164 232 00	31 T10/32-2	32	1F	100,00	106	101,86	65	21	31	10	493
164 236 00	31 T10/36-2	36	1F	112,75	119	114,59	70	21	31	10	623
164 240 00	31 T10/40-2	40	1F	125,45	131	127,32	80	21	31	10	767
164 244 00	31 T10/44-0	44	2	138,20	-	140,06	88	21	31	10	993
164 248 00	31 T10/48-0	48	2	150,95	-	152,79	95	21	31	16	1090
164 260 00	31 T10/60-0	60	2	189,10	-	190,99	110	21	31	16	1701

Profile T 10, Timing Belt Width 25 mm

Product No. Timing Belt Width 25 mm	Type	Number of teeth	Type	Outside Ø Pulley mm	Outside Ø Flange mm	d_0 mm	ND mm	b mm	L mm	Pilot Hole B mm	Weight g
164 312 00	40 T10/12-2	12	1F	36,35	42	38,20	28	30	40	6	99
164 314 00	40 T10/14-2	14	1F	42,70	48	44,56	32	30	40	8	134
164 315 00	40 T10/15-2	15	1F	45,90	51	47,75	32	30	40	8	152
164 316 00	40 T10/16-2	16	1F	49,10	54	50,93	35	30	40	8	176
164 318 00	40 T10/18-2	18	1F	55,45	60	57,30	40	30	40	8	224
164 319 00	40 T10/19-2	19	1F	58,65	66	60,48	44	30	40	8	247
164 320 00	40 T10/20-2	20	1F	61,80	66	63,66	46	30	40	8	276
164 322 00	40 T10/22-2	22	1F	68,20	75	70,03	52	30	40	8	337
164 324 00	40 T10/24-2	24	1F	74,55	83	76,39	58	30	40	8	392
164 325 00	40 T10/25-2	25	1F	77,75	83	79,58	60	30	40	8	422
164 326 00	40 T10/26-2	26	1F	80,90	87	82,76	60	30	40	8	477
164 327 00	40 T10/27-2	27	1F	84,10	91	85,94	60	30	40	8	536
164 328 00	40 T10/28-2	28	1F	87,25	93	89,13	60	30	40	8	540
164 330 00	40 T10/30-2	30	1F	93,65	97	95,49	60	30	40	8	640
164 332 00	40 T10/32-2	32	1F	100,00	106	101,86	65	30	40	10	693
164 336 00	40 T10/36-2	36	1F	112,75	119	114,59	70	30	40	10	873
164 340 00	40 T10/40-2	40	1F	125,45	131	127,32	80	30	40	10	1067
164 344 00	40 T10/44-0	44	2	138,20	-	140,06	88	30	40	10	1350
164 348 00	40 T10/48-0	48	2	150,95	-	152,79	95	30	40	16	1516
164 360 00	40 T10/60-0	60	2	189,10	-	190,99	110	30	40	16	2339

T Pulleys, Pitch 10 mm Made from Aluminium

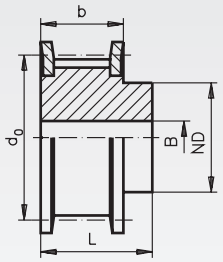

Type 1F

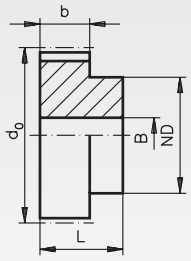

Type 2

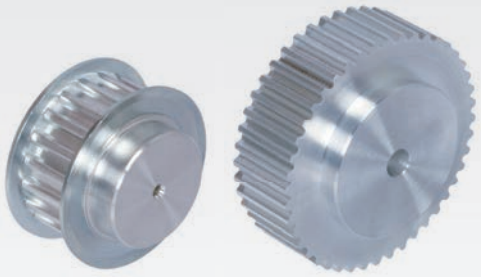

Material: Aluminium 6082-T6, UNI 9006. Flanges zinc-plated steel.

Ordering Details: e.g.: Product No. 164 418 00, Pulley, Pitch T10, 18 Teeth, Timing Belt Width 32 mm

Profile T 10, Timing Belt Width 32 mm

Product No. Timing Belt Width 32 mm	Type	Number of teeth	Type	Outside Ø Pulley mm	Outside Ø Flange mm	d_0 mm	ND mm	b mm	L mm	Pilot Hole B mm	Weight g
164 418 00	47 T10/18-2	18	1F	55,45	60	57,30	40	37	47	10	250
164 419 00	47 T10/19-2	19	1F	58,65	66	60,48	44	37	47	10	290
164 420 00	47 T10/20-2	20	1F	61,80	66	63,66	46	37	47	12	320
164 422 00	47 T10/22-2	22	1F	68,20	75	70,03	52	37	47	12	390
164 424 00	47 T10/24-2	24	1F	74,55	83	76,39	58	37	47	12	470
164 425 00	47 T10/25-2	25	1F	77,75	83	79,58	60	37	47	12	530
164 426 00	47 T10/26-2	26	1F	80,90	87	82,76	60	37	47	12	560
164 427 00	47 T10/27-2	27	1F	84,10	91	85,94	60	37	47	12	600
164 428 00	47 T10/28-2	28	1F	87,25	93	89,13	60	37	47	12	640
164 430 00	47 T10/30-2	30	1F	93,65	97	95,49	60	37	47	12	740
164 432 00	47 T10/32-2	32	1F	100,00	106	101,86	65	37	47	12	840
164 436 00	47 T10/36-2	36	1F	112,75	119	114,59	70	37	47	16	1060
164 440 00	47 T10/40-2	40	1F	125,45	131	127,32	80	37	47	16	1320
164 444 00	47 T10/44-0	44	2	138,20	-	140,06	88	37	47	16	1610
164 448 00	47 T10/48-0	48	2	150,95	-	152,79	95	37	47	16	1930
164 460 00	47 T10/60-0	60	2	189,10	-	190,99	110	37	47	16	3000

Profile T 10, Timing Belt Width 50 mm

Product No. Timing Belt Width 50 mm	Type	Number of teeth	Type	Outside Ø Pulley mm	Outside Ø Flange mm	d_0 mm	ND mm	b mm	L mm	Pilot Hole B mm	Weight g
164 518 00	66 T10/18-2	18	1F	55,45	60	57,30	40	56	66	10	420
164 519 00	66 T10/19-2	19	1F	58,65	66	60,48	44	56	66	10	470
164 520 00	66 T10/20-2	20	1F	61,80	66	63,66	46	56	66	12	520
164 522 00	66 T10/22-2	22	1F	68,20	75	70,03	52	56	66	12	570
164 524 00	66 T10/24-2	24	1F	74,55	83	76,39	58	56	66	12	740
164 525 00	66 T10/25-2	25	1F	77,75	83	79,58	60	56	66	12	770
164 526 00	66 T10/26-2	26	1F	80,90	87	82,76	60	56	66	12	820
164 527 00	66 T10/27-2	27	1F	84,10	91	85,94	60	56	66	12	950
164 528 00	66 T10/28-2	28	1F	87,25	93	89,13	60	56	66	12	960
164 530 00	66 T10/30-2	30	1F	93,65	97	95,49	60	56	66	12	1170
164 532 00	66 T10/32-2	32	1F	100,00	106	101,86	65	56	66	12	1300
164 536 00	66 T10/36-2	36	1F	112,75	119	114,59	70	56	66	16	1640
164 540 00	66 T10/40-2	40	1F	125,45	131	127,32	80	56	66	16	2000
164 544 00	66 T10/44-0	44	2	138,20	-	140,06	88	56	66	16	2360
164 548 00	66 T10/48-0	48	2	150,95	-	152,79	95	56	66	16	2830
164 560 00	66 T10/60-0	60	2	189,10	-	190,99	110	56	66	16	4370



Reworking within 24h-service possible. Custom made parts on request.

AT Pulleys, Pitch 5 mm Made from Aluminium

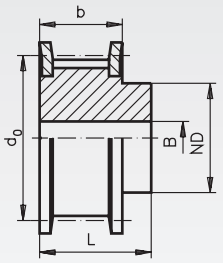

Type 1F

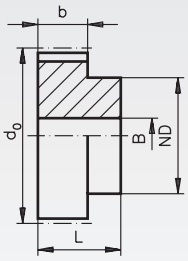

Type 2

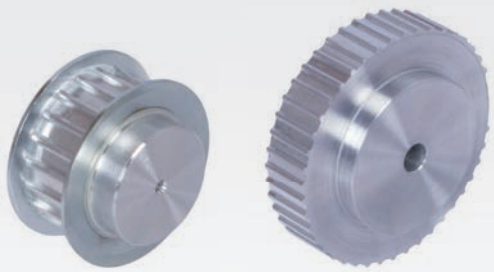

Material: Aluminium 6082-T6, UNI 9006. Flanges zinc-plated steel.

Ordering Details: e.g.: Product No. 166 212 00, Pulley, Pitch AT5, 12 Teeth, Timing Belt Width 10 mm

Profile AT 5, Timing Belt Width 10 mm

Product No. Timing Belt Width 10 mm	Type	Number of teeth	Type	Outside Ø Pulley mm	Outside Ø Flange mm	d_0 mm	ND mm	b mm	L mm	Pilot Hole B mm	Weight g
166 212 00	21 AT5/12-2	12	1F	17,85	23	19,10	10	15	21	-	16
166 214 00	21 AT5/14-2	14	1F	21,05	25	22,28	13	15	21	-	19
166 215 00	21 AT5/15-2	15	1F	22,65	28	23,87	16	15	21	-	21
166 216 00	21 AT5/16-2	16	1F	24,20	32	25,46	18	15	21	-	25
166 218 00	21 AT5/18-2	18	1F	27,40	32	28,65	20	15	21	-	31
166 219 00	21 AT5/19-2	19	1F	29,00	36	30,24	22	15	21	-	36
166 220 00	21 AT5/20-2	20	1F	30,60	36	31,88	23	15	21	-	38
166 222 00	21 AT5/22-2	22	1F	33,85	38	35,01	24	15	21	-	46
166 224 00	21 AT5/24-2	24	1F	37,00	42	38,20	26	15	21	-	54
166 225 00	21 AT5/25-2	25	1F	38,60	44	39,79	26	15	21	-	58
166 226 00	21 AT5/26-2	26	1F	40,20	44	41,38	26	15	21	-	62
166 227 00	21 AT5/27-2	27	1F	41,80	48	42,97	30	15	21	8	64
166 228 00	21 AT5/28-2	28	1F	43,35	48	44,56	32	15	21	8	71
166 230 00	21 AT5/30-2	30	1F	46,55	51	47,75	34	15	21	8	75
166 232 00	21 AT5/32-2	32	1F	49,70	54	50,93	38	15	21	8	88
166 236 00	21 AT5/36-2	36	1F	56,05	64	57,30	38	15	21	8	114
166 240 00	21 AT5/40-2	40	1F	62,45	66	63,66	40	15	21	8	138
166 242 00	21 AT5/42-2	42	1F	65,60	71	66,84	40	15	21	8	180
166 244 00	21 AT5/44-0	44	2	68,80	-	70,03	45	15	21	8	185
166 248 00	21 AT5/48-0	48	2	75,15	-	76,39	50	15	21	8	200
166 260 00	21 AT5/60-0	60	2	94,25	-	95,49	65	15	21	8	307

Profile AT 5, Timing Belt Width 16 mm

Product No. Timing Belt Width 16 mm	Type	Number of teeth	Type	Outside Ø Pulley mm	Outside Ø Flange mm	d_0 mm	ND mm	b mm	L mm	Pilot Hole B mm	Weight g
166 312 00	27 AT5/12-2	12	1F	17,85	23	19,10	10	21	27	-	22
166 314 00	27 AT5/14-2	14	1F	21,05	25	22,28	13	21	27	-	26
166 315 00	27 AT5/15-2	15	1F	22,65	28	23,87	16	21	27	-	29
166 316 00	27 AT5/16-2	16	1F	24,20	32	25,46	18	21	27	-	35
166 318 00	27 AT5/18-2	18	1F	27,40	32	28,65	20	21	27	-	43
166 319 00	27 AT5/19-2	19	1F	29,00	36	30,24	22	21	27	-	49
166 320 00	27 AT5/20-2	20	1F	30,60	36	31,88	23	21	27	-	53
166 322 00	27 AT5/22-2	22	1F	33,85	38	35,01	24	21	27	-	54
166 324 00	27 AT5/24-2	24	1F	37,00	42	38,20	26	21	27	-	76
166 325 00	27 AT5/25-2	25	1F	38,60	44	39,79	26	21	27	-	81
166 326 00	27 AT5/26-2	26	1F	40,20	44	41,38	26	21	27	-	85
166 327 00	27 AT5/27-2	27	1F	41,80	48	42,97	30	21	27	8	90
166 328 00	27 AT5/28-2	28	1F	43,35	48	44,56	32	21	27	8	92
166 330 00	27 AT5/30-2	30	1F	46,55	51	47,75	34	21	27	8	105
166 332 00	27 AT5/32-2	32	1F	49,70	54	50,93	38	21	27	8	123
166 336 00	27 AT5/36-2	36	1F	56,05	64	57,30	38	21	27	8	160
166 340 00	27 AT5/40-2	40	1F	62,45	66	63,66	40	21	27	8	193
166 342 00	27 AT5/42-2	42	1F	65,60	71	66,84	40	21	27	8	205
166 344 00	27 AT5/44-0	44	2	68,80	-	70,03	45	21	27	8	228
166 348 00	27 AT5/48-0	48	2	75,15	-	76,39	50	21	27	8	280
166 360 00	27 AT5/60-0	60	2	94,25	-	95,49	65	21	27	8	430

AT Pulleys, Pitch 5 mm Made from Aluminium

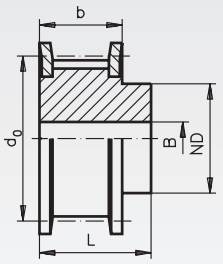

Type 1F

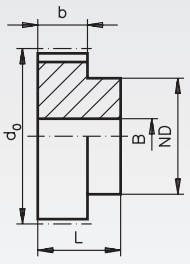

Type 2

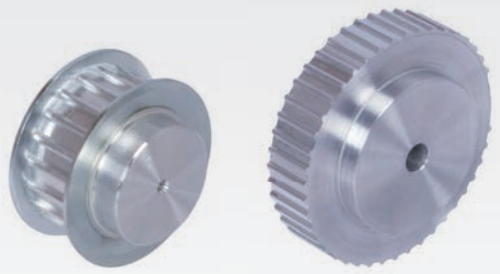

Material: Aluminium 6082-T6, UNI 9006. Flanges zinc-plated steel.

Ordering Details: e.g.: Product No. 166 412 00, Pulley, Pitch AT5, 12 Teeth, Timing Belt Width 25 mm

Profile AT 5, Timing Belt Width 25 mm

Product No. Timing Belt Width 25 mm	Type	Number of teeth	Type	Outside Ø Pulley mm	Outside Ø Flange mm	d_0 mm	ND mm	b mm	L mm	Pilot Hole B mm	Weight g
166 412 00	36 AT5/12-2	12	1F	17,85	23	19,10	10	30	36	-	30
166 414 00	36 AT5/14-2	14	1F	21,05	25	22,28	13	30	36	-	40
166 415 00	36 AT5/15-2	15	1F	22,65	28	23,87	16	30	36	-	40
166 416 00	36 AT5/16-2	16	1F	24,20	32	25,46	18	30	36	-	50
166 418 00	36 AT5/18-2	18	1F	27,40	32	28,65	20	30	36	-	60
166 419 00	36 AT5/19-2	19	1F	29,00	36	30,24	22	30	36	-	70
166 420 00	36 AT5/20-2	20	1F	30,60	36	31,88	23	30	36	-	80
166 422 00	36 AT5/22-2	22	1F	33,85	38	35,01	24	30	36	-	80
166 424 00	36 AT5/24-2	24	1F	37,00	42	38,20	26	30	36	8	110
166 425 00	36 AT5/25-2	25	1F	38,60	44	39,79	26	30	36	8	120
166 426 00	36 AT5/26-2	26	1F	40,20	44	41,38	26	30	36	8	120
166 427 00	36 AT5/27-2	27	1F	41,80	48	42,97	30	30	36	8	130
166 428 00	36 AT5/28-2	28	1F	43,35	48	44,56	32	30	36	8	140
166 430 00	36 AT5/30-2	30	1F	46,55	51	47,75	34	30	36	8	150
166 432 00	36 AT5/32-2	32	1F	49,70	54	50,93	38	30	36	8	180
166 436 00	36 AT5/36-2	36	1F	56,05	64	57,30	38	30	36	8	230
166 440 00	36 AT5/40-2	40	1F	62,45	66	63,66	40	30	36	8	280
166 442 00	36 AT5/42-2	42	1F	65,60	71	66,84	40	30	36	8	290
166 444 00	36 AT5/44-0	44	2	68,80	-	70,03	45	30	36	8	310
166 448 00	36 AT5/48-0	48	2	75,15	-	76,39	50	30	36	8	400
166 460 00	36 AT5/60-0	60	2	94,25	-	95,49	65	30	36	8	610

Profile AT 5, Timing Belt Width 32 mm

Product No. Timing Belt Width 32 mm	Type	Number of teeth	Type	Outside Ø Pulley mm	Outside Ø Flange mm	d_0 mm	ND mm	b mm	L mm	Pilot Hole B mm	Weight g
166 512 00	46 AT5/12-2	12	1F	17,85	23	19,10	10	40	46	-	42
166 514 00	46 AT5/14-2	14	1F	21,05	25	22,28	13	40	46	-	49
166 515 00	46 AT5/15-2	15	1F	22,65	28	23,87	16	40	46	-	55
166 516 00	46 AT5/16-2	16	1F	24,20	32	25,46	18	40	46	-	66
166 518 00	46 AT5/18-2	18	1F	27,40	32	28,65	20	40	46	-	81
166 519 00	46 AT5/19-2	19	1F	29,00	36	30,24	22	40	46	-	93
166 520 00	46 AT5/20-2	20	1F	30,60	36	31,88	23	40	46	-	100
166 522 00	46 AT5/22-2	22	1F	33,85	38	35,01	24	40	46	-	102
166 524 00	46 AT5/24-2	24	1F	37,00	42	38,20	26	40	46	8	144
166 525 00	46 AT5/25-2	25	1F	38,60	44	39,79	26	40	46	8	153
166 526 00	46 AT5/26-2	26	1F	40,20	44	41,38	26	40	46	8	161
166 527 00	46 AT5/27-2	27	1F	41,80	48	42,97	30	40	46	8	170
166 528 00	46 AT5/28-2	28	1F	43,35	48	44,56	32	40	46	8	174
166 530 00	46 AT5/30-2	30	1F	46,55	51	47,75	34	40	46	8	198
166 532 00	46 AT5/32-2	32	1F	49,70	54	50,93	38	40	46	8	232
166 536 00	46 AT5/36-2	36	1F	56,05	64	57,30	38	40	46	8	302
166 540 00	46 AT5/40-2	40	1F	62,45	66	63,66	40	40	46	8	365
166 542 00	46 AT5/42-2	42	1F	65,60	71	66,84	40	40	46	8	387
166 544 00	46 AT5/44-0	44	2	68,80	-	70,03	45	40	46	8	431
166 548 00	46 AT5/48-0	48	2	75,15	-	76,39	50	40	46	8	529
166 560 00	46 AT5/60-0	60	2	94,25	-	95,49	65	40	46	8	813

AT Pulleys, Pitch 10 mm Made from Aluminium

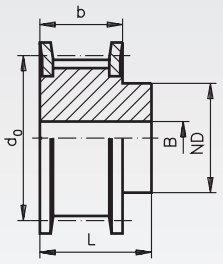

Type 1F

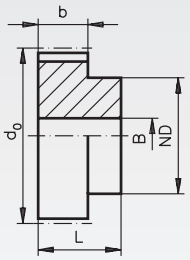

Type 2

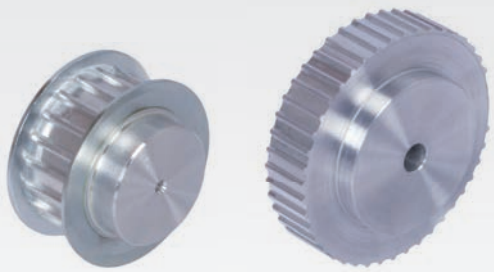

Material: Aluminium 6082-T6, UNI 9006. Flanges zinc-plated steel.

Ordering Details: e.g.: Product No. 168 215 00, Pulley, Pitch AT 10, 15 Teeth, Timing Belt Width 16 mm

Profile AT 10, Timing Belt Width 16 mm

Product No. Timing Belt Width 16 mm	Type	Number of teeth	Type	Outside Ø Pulley mm	Outside Ø Flange mm	d_0 mm	ND mm	b mm	L mm	Pilot Hole B mm	Weight g
168 215 00	31 AT10/15-2	15	1F	45,90	51	47,75	32	21	31	8	116
168 216 00	31 AT10/16-2	16	1F	49,05	54	50,93	35	21	31	8	134
168 218 00	31 AT10/18-2	18	1F	55,45	60	57,30	40	21	31	8	167
168 219 00	31 AT10/19-2	19	1F	58,60	66	60,48	44	21	31	8	184
168 220 00	31 AT10/20-2	20	1F	61,80	66	63,66	46	21	31	8	208
168 222 00	31 AT10/22-2	22	1F	68,15	75	70,03	52	21	31	8	253
168 224 00	31 AT10/24-2	24	1F	74,55	83	76,39	58	21	31	8	288
168 225 00	31 AT10/25-2	25	1F	77,70	83	79,58	60	21	31	8	310
168 226 00	31 AT10/26-2	26	1F	80,90	87	82,76	60	21	31	8	357
168 227 00	31 AT10/27-2	27	1F	84,10	91	85,94	60	21	31	8	364
168 228 00	31 AT10/28-2	28	1F	87,25	93	89,13	60	21	31	8	401
168 230 00	31 AT10/30-2	30	1F	93,65	97	95,49	60	21	31	8	441
168 232 00	31 AT10/32-2	32	1F	100,00	106	101,86	65	21	31	10	493
168 236 00	31 AT10/36-2	36	1F	112,75	119	114,59	70	21	31	10	623
168 240 00	31 AT10/40-2	40	1F	125,45	131	127,32	80	21	31	10	767
168 244 00	31 AT10/44-0	44	2	138,20		140,06	88	21	31	10	993
168 248 00	31 AT10/48-0	48	2	150,95	-	152,79	95	21	31	16	1090
168 260 00	31 AT10/60-0	60	2	189,10	-	190,99	110	21	31	16	1701

Profile AT 10, Timing Belt Width 25 mm

Product No. Timing Belt Width 25 mm	Type	Number of teeth	Type	Outside Ø Pulley mm	Outside Ø Flange mm	d_0 mm	ND mm	b mm	L mm	Pilot Hole B mm	Weight g
168 315 00	40 AT10/15-2	15	1F	45,90	51	47,75	32	30	40	8	152
168 316 00	40 AT10/16-2	16	1F	49,05	54	50,93	35	30	40	8	176
168 318 00	40 AT10/18-2	18	1F	55,45	60	57,30	40	30	40	8	224
168 319 00	40 AT10/19-2	19	1F	58,60	66	60,48	44	30	40	8	247
168 320 00	40 AT10/20-2	20	1F	61,80	66	63,66	46	30	40	8	276
168 322 00	40 AT10/22-2	22	1F	68,15	75	70,03	52	30	40	8	337
168 324 00	40 AT10/24-2	24	1F	74,55	83	76,39	58	30	40	8	392
168 325 00	40 AT10/25-2	25	1F	77,70	83	79,58	60	30	40	8	422
168 326 00	40 AT10/26-2	26	1F	80,90	87	82,76	60	30	40	8	477
168 327 00	40 AT10/27-2	27	1F	84,10	91	85,94	60	30	40	8	536
168 328 00	40 AT10/28-2	28	1F	87,25	93	89,13	60	30	40	8	540
168 330 00	40 AT10/30-2	30	1F	93,65	97	95,49	60	30	40	8	640
168 332 00	40 AT10/32-2	32	1F	100,00	106	101,86	65	30	40	10	693
168 336 00	40 AT10/36-2	36	1F	112,75	119	114,59	70	30	40	10	873
168 340 00	40 AT10/40-2	40	1F	125,45	131	127,32	80	30	40	10	1067
168 344 00	40 AT10/44-0	44	2	138,20	-	140,06	88	30	40	10	1350
168 348 00	40 AT10/48-0	48	2	150,95	-	152,79	95	30	40	16	1516
168 360 00	40 AT10/60-0	60	2	189,10	-	190,99	110	30	40	16	2339



Reworking within 24h-service possible. Custom made parts on request.

AT Pulleys, Pitch 10 mm Made from Aluminium

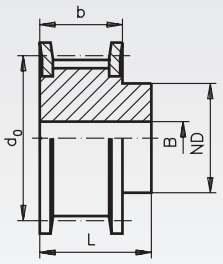

Type 1F

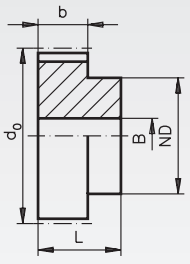

Type 2

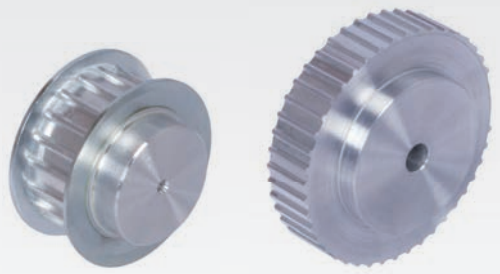

Material: Aluminium 6082-T6, UNI 9006. Flanges zinc-plated steel.

Ordering Details: e.g.: Product No. 168 418 00, Pulley, Pitch AT 10, 18 Teeth, Timing Belt Width 32 mm

Profile AT 10, Timing Belt Width 32 mm

Product No. Timing Belt Width 32 mm	Type	Number of teeth	Type	Outside Ø Pulley mm	Outside Ø Flange mm	d_0 mm	ND mm	b mm	L mm	Pilot Hole B mm	Weight g
168 418 00	47 AT10/18-2	18	1F	55,45	60	57,30	40	37	47	10	250
168 419 00	47 AT10/19-2	19	1F	58,60	66	60,48	44	37	47	10	290
168 420 00	47 AT10/20-2	20	1F	61,80	66	63,66	46	37	47	12	320
168 422 00	47 AT10/22-2	22	1F	68,15	75	70,03	52	37	47	12	390
168 424 00	47 AT10/24-2	24	1F	74,55	83	76,39	58	37	47	12	470
168 425 00	47 AT10/25-2	25	1F	77,70	83	79,58	60	37	47	12	530
168 426 00	47 AT10/26-2	26	1F	80,90	87	82,76	60	37	47	12	560
168 427 00	47 AT10/27-2	27	1F	84,10	91	85,94	60	37	47	12	600
168 428 00	47 AT10/28-2	28	1F	87,25	93	89,13	60	37	47	12	640
168 430 00	47 AT10/30-2	30	1F	93,65	97	95,49	60	37	47	12	740
168 432 00	47 AT10/32-2	32	1F	100,00	106	101,86	65	37	47	12	840
168 436 00	47 AT10/36-2	36	1F	112,75	119	114,59	70	37	47	16	1060
168 440 00	47 AT10/40-2	40	1F	125,45	131	127,32	80	37	47	16	1320
168 444 00	47 AT10/44-0	44	2	138,20	-	140,06	88	37	47	16	1610
168 448 00	47 AT10/48-0	48	2	150,95	-	152,79	95	37	47	16	1930
168 460 00	47 AT10/60-0	60	2	189,10	-	190,99	110	37	47	16	3000

Profile AT 10, Timing Belt Width 50 mm

Product No. Timing Belt Width 50 mm	Type	Number of teeth	Type	Outside Ø Pulley mm	Outside Ø Flange mm	d_0 mm	ND mm	b mm	L mm	Pilot Hole B mm	Weight g
168 518 00	66 AT10/18-2	18	1F	55,45	60	57,30	40	56	66	10	420
168 519 00	66 AT10/19-2	19	1F	58,60	66	60,48	44	56	66	10	470
168 520 00	66 AT10/20-2	20	1F	61,80	66	63,66	46	56	66	12	520
168 522 00	66 AT10/22-2	22	1F	68,15	75	70,03	52	56	66	12	570
168 524 00	66 AT10/24-2	24	1F	74,55	83	76,39	58	56	66	12	740
168 525 00	66 AT10/25-2	25	1F	77,70	83	79,58	60	56	66	12	770
168 526 00	66 AT10/26-2	26	1F	80,90	87	82,76	60	56	66	12	820
168 527 00	66 AT10/27-2	27	1F	84,10	91	85,94	60	56	66	12	950
168 528 00	66 AT10/28-2	28	1F	87,25	93	89,13	60	56	66	12	960
168 530 00	66 AT10/30-2	30	1F	93,65	97	95,49	60	56	66	12	1170
168 532 00	66 AT10/32-2	32	1F	100,00	106	101,86	65	56	66	12	1300
168 536 00	66 AT10/36-2	36	1F	112,75	119	114,59	70	56	66	16	1640
168 540 00	66 AT10/40-2	40	1F	125,45	131	127,32	80	56	66	16	2000
168 544 00	66 AT10/44-0	44	2	138,20	-	140,06	88	56	66	16	2360
168 548 00	66 AT10/48-0	48	2	150,95	-	152,79	95	56	66	16	2830
168 560 00	66 AT10/60-0	60	2	189,10	-	190,99	110	56	66	16	4370



Reworking within 24h-service possible. Custom made parts on request.

HTD Pulleys Profile 3M

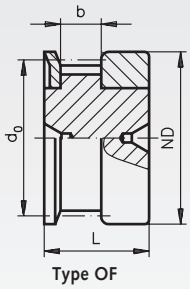

Type OF

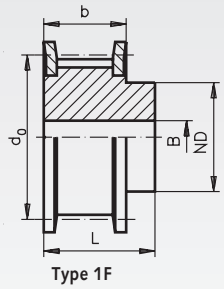

Type 1F

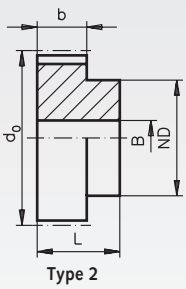

Type 2

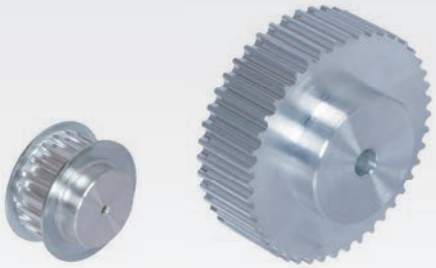

Material: Aluminium 6082-T6, UNI 9006.
Flanges zinc-plated steel.

The functionality of a V-belt drive is largely influenced by the quality of the used pulley.
HTD pulleys are precision components, manufactured pitch-true with special cutters. This leads to a precise meshing of teeth.

Ordering Details: e.g.: Product No. 170 210 00, Pulleys, Pitch 3 mm, 10 Teeth, Timing Belt Width 9 mm

Profile 3M, Timing Belt Width 9 mm

Product No. Timing Belt Width 9 mm	Number of teeth	Type	Outside Ø Pulley mm	Outside Ø Flange mm	d_0 mm	ND mm	b mm	L mm	Pilot Hole B mm	Custom Bore B max. mm	Weight g
170 210 00	10	0F	8,79	13,0	9,55	12,0	10,2	17,5	-	3,5	3,6
170 212 00	12	0F	10,70	15,0	11,46	15,0	10,2	17,5	-	5,0	5,2
170 214 00	14	0F	12,61	16,0	13,37	16,0	10,2	17,5	-	6,0	6,6
170 215 00	15	0F	13,56	18,0	14,32	17,5	10,2	17,5	-	6,0	7,7
170 216 00	16	1F	14,52	18,0	15,28	10,0	12,8	20,6	4	5,5	6,6
170 218 00	18	1F	16,43	19,5	17,19	11,0	12,8	20,6	6	6,5	7,7
170 220 00	20	1F	18,34	23,0	19,10	13,0	12,8	20,6	6	8,0	10,4
170 221 00	21	1F	19,29	25,0	20,05	14,0	12,8	20,6	6	9,0	12,5
170 222 00	22	1F	20,25	25,0	21,01	14,0	12,8	20,6	6	9,0	14
170 224 00	24	1F	22,16	25,0	22,92	14,0	12,8	20,6	6	9,0	15
170 226 00	26	1F	24,07	28,0	24,83	16,0	12,8	20,6	6	10,0	18,6
170 228 00	28	1F	25,98	32,0	26,74	18,0	12,8	20,6	6	11,0	23
170 230 00	30	1F	27,89	32,0	28,65	20,0	12,8	20,6	6	12,5	27
170 232 00	32	1F	29,80	36,0	30,56	22,0	12,8	20,6	6	13,5	32
170 236 00	36	1F	33,62	38,0	34,38	26,0	13,4	22,2	6	15,0	44,2
170 240 00	40	1F	37,44	42,0	38,20	28,0	13,4	22,2	6	16,5	53
170 244 00	44	1F	41,26	48,0	42,02	33,0	13,4	22,2	6	20,0	66
170 248 00	48	2	45,08	-	45,84	33,0	13,4	22,2	8	20,0	72
170 260 00	60	2	56,54	-	57,30	33,0	13,4	22,2	8	20,0	105
170 272 00	72	2	67,99	-	68,75	33,0	13,4	22,2	8	20,0	146

Timing belt width 6 mm available on request.

Profile 3M, Timing Belt Width 15 mm

Product No. Timing Belt Width 15 mm	Number of teeth	Type	Outside Ø Pulley mm	Outside Ø Flange mm	d_0 mm	ND mm	b mm	L mm	Pilot Hole B mm	Custom Bore B max. mm	Weight g
170 310 00	10	0F	8,79	13,0	9,55	12,0	17,0	26	-	3,5	5
170 312 00	12	0F	10,70	15,0	11,46	15,0	17,0	26	-	5,0	7,4
170 314 00	14	0F	12,61	16,0	13,37	16,0	17,0	26	-	6,0	9,4
170 315 00	15	0F	13,56	18,0	14,32	17,5	17,0	26	-	6,0	11
170 316 00	16	1F	14,52	18,0	15,28	10,0	19,5	26	4	5,5	8,5
170 318 00	18	1F	16,43	19,5	17,19	11,0	19,5	26	6	6,5	10,2
170 320 00	20	1F	18,34	23,0	19,10	13,0	19,5	26	6	8,0	13,8
170 321 00	21	1F	19,29	25,0	20,05	14,0	19,5	26	6	9,0	16,2
170 322 00	22	1F	20,25	25,0	21,01	14,0	19,5	26	6	9,0	17,2
170 324 00	24	1F	22,16	25,0	22,92	14,0	19,5	26	6	9,0	20
170 326 00	26	1F	24,07	28,0	24,83	16,0	19,5	26	6	10,0	25
170 328 00	28	1F	25,98	32,0	26,74	18,0	19,5	26	6	11,0	31
170 330 00	30	1F	27,89	32,0	28,65	20,0	19,5	26	6	12,5	35
170 332 00	32	1F	29,80	36,0	30,56	22,0	19,5	26	6	13,5	41
170 336 00	36	1F	33,62	38,0	34,38	26,0	20,0	30	6	15,0	60
170 340 00	40	1F	37,44	42,0	38,20	28,0	20,0	30	6	16,5	72
170 344 00	44	1F	41,26	48,0	42,02	33,0	20,0	30	6	20,0	95
170 348 00	48	2	45,08	-	45,84	33,0	20,0	30	8	20,0	101
170 360 00	60	2	56,54	-	57,30	33,0	20,0	30	8	20,0	151
170 372 00	72	2	67,99	-	68,75	33,0	20,0	30	8	20,0	212

HTD Pulleys Profile 5M

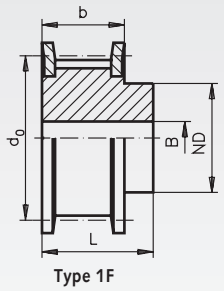

Type 1F

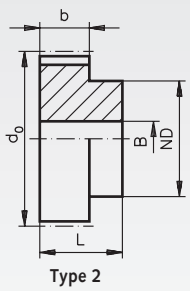

Type 2



Material: Up to a Teeth Number of 40 phosphated steel, from a Teeth Number of 44 aluminium.

The functionality of a V-belt drive is largely influenced by the quality of the used pulley.
HTD pulleys are precision components, manufactured pitch-true with special cutters. This leads to a precise meshing of teeth.

Ordering Details: e.g.: Product No. 172 212 00, Pulleys, Pitch 5 mm, 12 Teeth, Timing Belt Width 9 mm

Profile 5M, Timing Belt Width 9 mm

Product No. Timing Belt Width 9 mm	Number of teeth	Type	Outside Ø Pulley mm	Outside Ø Flange mm	d_0 mm	ND mm	b mm	L mm	Pilot Hole B mm	Custom Bore B max. mm	Weight g
172 212 00	12	1F	17,96	23	19,10	12,5	14,5	20,0	6	8,0	27
172 214 00	14	1F	21,14	25	22,28	13,5	14,5	20,0	6	9,0	34
172 215 00	15	1F	22,73	28	23,87	16,0	14,5	20,0	6	10,0	44
172 216 00	16	1F	24,32	28	25,46	16,5	14,5	20,0	6	10,5	49
172 218 00	18	1F	27,51	32	28,65	20,0	14,5	20,0	6	12,5	69
172 220 00	20	1F	30,69	36	31,83	23,0	14,5	22,5	6	13,5	96
172 221 00	21	1F	32,28	38	33,42	24,0	14,5	22,5	6	14,0	108
172 222 00	22	1F	33,87	38	35,01	25,5	14,5	22,5	6	15,0	118
172 224 00	24	1F	37,06	42	38,20	27,0	14,5	22,5	6	16,0	142
172 226 00	26	1F	40,24	44	41,38	30,0	14,5	22,5	6	18,0	168
172 228 00	28	1F	43,42	48	44,56	30,5	14,5	22,5	6	18,0	192
172 230 00	30	1F	46,60	51	47,75	35,0	14,5	22,5	6	21,0	232
172 232 00	32	1F	49,79	54	50,93	38,0	14,5	22,5	8	23,0	267
172 236 00	36	1F	56,16	60	57,30	38,0	14,5	22,5	8	23,0	325
172 240 00	40	1F	62,52	71	63,66	38,0	14,5	22,5	8	23,0	396
172 244 00	44	2	68,89	-	70,03	38,0	14,5	25,5	8	23,0	142
172 248 00	48	2	75,25	-	76,39	45,0	14,5	25,5	8	28,0	179
172 260 00	60	2	94,35	-	95,49	45,0	14,5	25,5	8	28,0	227
172 272 00	72	2	113,45	-	114,59	45,0	14,5	25,5	8	28,0	281

Profile 5M, Timing Belt Width 15 mm

Product No. Timing Belt Width 15 mm	Number of teeth	Type	Outside Ø Pulley mm	Outside Ø Flange mm	d_0 mm	ND mm	b mm	L mm	Pilot Hole B mm	Custom Bore B max. mm	Weight g
172 312 00	12	1F	17,96	23	19,10	12,5	20,5	26	6	8,0	37
172 314 00	14	1F	21,14	25	22,28	13,5	20,5	26	6	9,0	46
172 315 00	15	1F	22,73	28	23,87	16,0	20,5	26	6	10,0	60
172 316 00	16	1F	24,32	28	25,46	16,5	20,5	26	6	10,5	64
172 318 00	18	1F	27,51	32	28,65	20,0	20,5	26	6	12,5	89
172 320 00	20	1F	30,69	36	31,83	23,0	20,5	26	6	13,5	118
172 321 00	21	1F	32,28	38	33,42	24,0	20,5	26	6	14,0	130
172 322 00	22	1F	33,87	38	35,01	25,5	20,5	26	6	15,0	144
172 324 00	24	1F	37,06	42	38,20	27,0	20,5	28	6	16,0	181
172 326 00	26	1F	40,24	44	41,38	30,0	20,5	28	6	18,0	215
172 328 00	28	1F	43,42	48	44,56	30,5	20,5	28	6	18,0	252
172 330 00	30	1F	46,60	51	47,75	35,0	20,5	28	6	21,0	298
172 332 00	32	1F	49,79	54	50,93	38,0	20,5	28	8	23,0	344
172 336 00	36	1F	56,16	60	57,30	38,0	20,5	28	8	23,0	420
172 340 00	40	1F	62,52	71	63,66	38,0	20,5	28	8	23,0	467
172 344 00	44	2	68,89	-	70,03	38,0	20,5	30	8	23,0	182
172 348 00	48	2	75,25	-	76,39	38,0	20,5	30	8	23,0	198
172 360 00	60	2	94,35	-	95,49	50,0	20,5	30	8	30,0	312
172 372 00	72	2	113,45	-	114,59	50,0	20,5	30	8	30,0	387

HTD Pulleys, Profile 5M for Taper Bushes

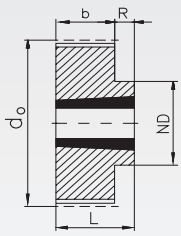

Type 10

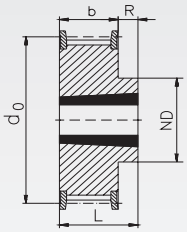

Type 10F

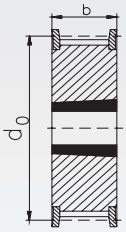

Type 15F



Material: Steel, phosphated.

Taper bushes see page 158.

Ordering Details: e.g.: Product No. 172 773 34, Taper Pulley, Pitch 5 mm, 12 Teeth, Timing Belt Width 15 mm

Profile 5M, Timing Belt Width 15 mm

Product No. 15 mm	Number of teeth	Type	d_0 mm	Outside-Ø Pulley mm	Outside-Ø Flange mm	ND mm	b mm	L mm	R mm	Taper Bush Type page 158	Bore-Ø min. mm	Bore-Ø max. mm	Weight g
172 773 34	34	15F	54,11	52,97	57	-	22	22	-	1008	9	25	200
172 773 36	36	15F	57,30	56,15	60	-	22	22	-	1108	9	28	250
172 773 38	38	15F	60,48	59,34	66	-	22	22	-	1108	9	28	300
172 773 40	40	15F	63,66	62,52	71	-	22	22	-	1108	9	28	350
172 773 44	44	15F	70,03	68,89	75	-	22	22	-	1108	9	28	400
172 773 48	48	10F	76,39	75,25	83	59	22	25	3	1210	10	32	460
172 773 56	56	10F	89,13	87,99	93	70	22	25	3	1210	10	32	600
172 773 64	64	10F	101,86	100,72	106	80	22	25	3	1210	10	32	800
172 773 72	72	10	114,59	113,45	-	92	22	25	3	1610	12	42	1200
172 773 80	80	10	127,32	126,18	-	92	22	25	3	1610	12	42	1760
172 773 90	90	10	143,24	142,10	-	92	22	25	3	1610	12	42	2320
172 773 94	112	10	178,25	177,11	-	110	20	32	12	2012	12	50	3710

HTD Pulleys Profile 5M

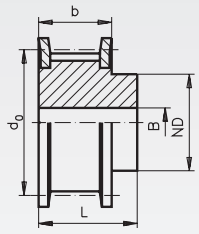

Type 1F

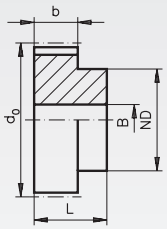

Type 2





Material: Up to a Teeth Number of 72 steel, phosphated. From a Teeth Number of 44 aluminium.

Ordering Details: e.g.: Product No. 172 412 00, Pulleys, Pitch 5 mm, 12 Teeth, Timing Belt Width 25 mm

Profile 5M, Timing Belt Width 25 mm

Product No. Timing Belt Width 25 mm	Number of teeth	Type	Outside Ø Pulley mm	Outside Ø Flange mm	d_0 mm	ND mm	b mm	L mm	Pilot Hole B mm	Custom Bore B max. mm	Weight g
172 412 00	12	1F	17,96	23	19,10	12,5	30,5	36	6	8,0	50
172 414 00	14	1F	21,14	25	22,28	13,5	30,5	36	6	9,0	80
172 415 00	15	1F	22,73	28	23,87	16,0	30,5	36	6	10,0	90
172 416 00	16	1F	24,32	28	25,46	16,5	30,5	36	6	10,5	110
172 418 00	18	1F	27,51	32	28,65	20,0	30,5	36	6	12,5	130
172 420 00	20	1F	30,69	36	31,83	23,0	30,5	36	6	13,5	170
172 421 00	21	1F	32,28	38	33,42	24,0	30,5	38	6	14,0	200
172 422 00	22	1F	33,87	38	35,01	25,5	30,5	38	6	15,0	220
172 424 00	24	1F	37,06	42	38,20	27,0	30,5	38	6	16,0	260
172 426 00	26	1F	40,24	44	41,38	30,0	30,5	38	6	18,0	320
172 428 00	28	1F	43,42	48	44,56	30,5	30,5	38	6	18,0	370
172 430 00	30	1F	46,60	51	47,75	35,0	30,5	38	6	21,0	440
172 432 00	32	1F	49,79	54	50,93	38,0	30,5	38	8	23,0	480
172 436 00	36	1F	56,16	60	57,30	38,0	30,5	38	8	23,0	590
172 440 00	40	1F	62,52	71	63,66	38,0	30,5	38	8	23,0	750
172 444 00	44	2	68,89	-	70,03	38,0	30,5	40	8	23,0	310
172 448 00	48	2	75,25	-	76,39	38,0	30,5	40	8	23,0	370
172 460 00	60	2	94,35	-	95,49	50,0	30,5	40	8	30,0	600
172 472 00	72	2	113,45	-	114,59	50,0	30,5	40	8	30,0	850

HTD Pulleys Profile 8M

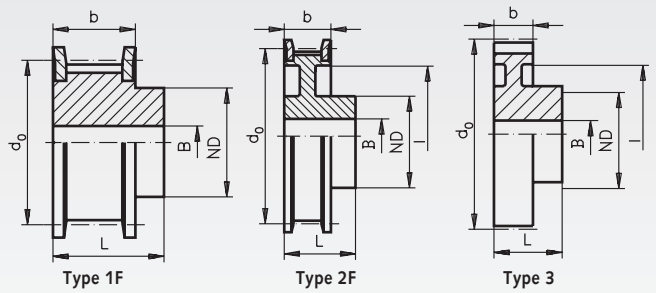

Type 1F Type 2F Type 3



Material: Up to a Teeth Number of 72 phosphated steel, from a Teeth Number of 80 phosphated grey cast iron GG20.

The functionality of a V-belt drive is largely influenced by the quality of the used pulley.
HTD pulleys are precision components, manufactured pitch-true with special cutters. This leads to a precise meshing of teeth.

Ordering Details: e.g.: Product No. 174 111 00, Pulleys, Pitch 8 mm, 22 Teeth, Timing Belt Width 20 mm

Profile 8M, Timing Belt Width 20 mm

Product No. Timing Belt Width 20 mm	Number of teeth	Type	Outside Ø Pulley mm	Outside Ø Flange mm	d_0 mm	ND mm	b mm	L mm	l mm	Pilot Hole B mm	Custom Bore B max. mm	Weight g
174 111 00	22	1F	54,65	60,0	56,02	43	28	38	-	12	25	535
174 112 00	24	1F	59,75	66,0	61,12	45	28	38	-	12	28	645
174 113 00	26	1F	64,85	71,0	66,21	48	28	38	-	12	30	753
174 114 00	28	1F	70,08	75,0	71,30	50	28	38	-	14	30	859
174 115 00	30	1F	75,13	83,0	76,39	55	28	38	-	14	32	1017
174 116 00	32	1F	80,16	87,0	81,49	60	28	38	-	14	35	1188
174 117 00	34	1F	85,22	91,0	86,58	66	28	38	-	14	42	1358
174 118 00	36	1F	90,30	98,5	91,67	70	28	38	-	14	42	1547
174 119 00	38	1F	95,39	103,0	96,77	75	28	38	-	14	45	1744
174 120 00	40	1F	100,49	106,0	101,86	75	28	38	-	14	45	1902
174 122 00	44	1F	110,67	119,0	112,05	75	28	38	-	14	45	2268
174 124 00	48	1F	120,86	127,0	122,23	75	28	38	-	14	45	2661
174 128 00	56	2F	141,23	148,0	142,60	80	28	38	116	14	45	2853
174 132 00	64	2F	161,60	168,0	162,97	80	28	38	137	14	45	3282
174 136 00	72	2F	181,97	192,0	183,35	80	28	38	158	14	45	3824
174 140 00	80	3	202,35	-	203,72	90	28	38	180	14	50	4317
174 145 00	90	3	227,81	-	229,18	90	28	38	204	14	50	5041

Profile 8M, Timing Belt Width 30 mm

Product No. Timing Belt Width 30 mm	Number of teeth	Type	Outside Ø Pulley mm	Outside Ø Flange mm	d_0 mm	ND mm	b mm	L mm	l mm	Pilot Hole B mm	Custom Bore B max. mm	Weight g
174 211 00	22	1F	54,65	60,0	56,02	43	38	48	-	12	25	683
174 212 00	24	1F	59,75	66,0	61,12	45	38	48	-	12	28	827
174 213 00	26	1F	64,85	71,0	66,21	50	38	48	-	12	30	979
174 214 00	28	1F	70,08	75,0	71,30	50	38	48	-	14	30	1112
174 215 00	30	1F	75,13	83,0	76,39	55	38	48	-	14	32	1314
174 216 00	32	1F	80,16	87,0	81,49	60	38	48	-	14	35	1521
174 217 00	34	1F	85,22	91,0	86,58	66	38	48	-	14	42	1742
174 218 00	36	1F	90,30	98,5	91,67	70	38	48	-	14	42	1981
174 219 00	38	1F	95,39	103,0	96,77	75	38	48	-	14	45	2232
174 220 00	40	1F	100,49	106,0	101,86	75	38	48	-	14	45	2472
174 222 00	44	1F	110,67	119,0	112,05	75	38	48	-	14	45	2948
174 224 00	48	1F	120,86	127,0	122,23	75	38	48	-	14	45	3471
174 228 00	56	2F	141,23	148,0	142,60	90	38	48	116	14	50	4005
174 232 00	64	2F	161,60	168,0	162,97	90	38	48	137	14	50	4556
174 236 00	72	2F	181,97	192,0	183,35	95	38	48	158	14	55	5408
174 240 00	80	3	202,35	-	203,72	100	38	48	180	14	60	5712
174 245 00	90	3	227,81	-	229,18	100	38	48	204	14	60	6645



Reworking within 24h-service possible. Custom made parts on request.

HTD Pulleys Profile 8M

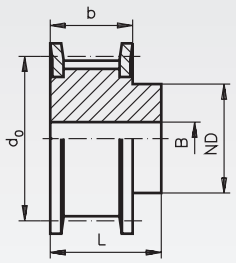

Type 1F

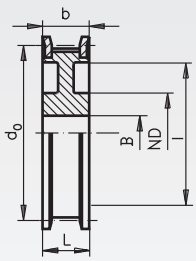

Type 10WF

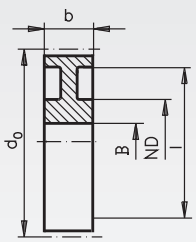

Type 10W

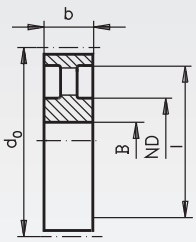

Type 10A



Material: Up to a Teeth Number of 72 phosphated steel, from a Teeth Number of 80 phosphated grey cast iron GG20.

The functionality of a V-belt drive is largely influenced by the quality of the used pulley.
HTD pulleys are precision components, manufactured pitch-true with special cutters. This leads to a precise meshing of teeth.

Ordering Details: e.g.: Product No. 174 411 00, Pulleys, Pitch 8 mm, 22 Teeth, Timing Belt Width 50 mm

Profile 8M, Timing Belt Width 50 mm

Product No. Timing Belt Width 50mm	Number of teeth	Type	Outside Ø Pulley mm	Outside Ø Flange mm	d_0 mm	ND mm	b mm	L mm	l mm	Pilot Bore B mm	Weight kg
174 411 00	22	1F	54,65	60,0	56,02	43	60	70	-	12	1,10
174 412 00	24	1F	59,75	66,0	61,12	45	60	70	-	12	1,30
174 413 00	26	1F	64,85	71,0	66,21	48	60	70	-	12	1,60
174 414 00	28	1F	70,08	75,0	71,3	50	60	70	-	14	1,70
174 415 00	30	1F	75,13	83,0	76,39	55	60	70	-	14	2,00
174 416 00	32	1F	80,16	87,0	81,49	60	60	70	-	14	2,35
174 417 00	34	1F	85,22	91,0	86,58	66	60	70	-	14	2,80
174 418 00	36	1F	90,30	98,5	91,67	70	60	70	-	14	3,15
174 419 00	38	1F	95,39	103,0	96,77	75	60	70	-	14	3,30
174 420 00	40	1F	100,49	106,0	101,86	75	60	70	-	14	3,60
174 422 00	44	1F	110,67	119,0	112,05	75	60	70	-	14	4,40
174 424 00	48	1F	120,86	127,0	122,23	75	60	70	-	14	5,00
174 428 00	56	10WF	141,23	148,0	142,6	80	60	-	116	18	5,68
174 432 00	64	10WF	161,60	168,0	162,97	80	60	-	137	18	6,93
174 436 00	72	10WF	181,97	192,0	183,35	80	60	-	158	18	7,95
174 440 00	80	10W	202,35	-	203,72	110	60	-	180	18	6,90

Profile 8M, Timing Belt Width 85 mm

Product No. Timing Belt Width 85mm	Number of teeth	Type	Outside Ø Pulley mm	Outside Ø Flange mm	d_0 mm	ND mm	b mm	L mm	l mm	Pilot Bore B mm	Weight kg
174 511 00	22	1F	54,65	60,0	56,02	43	95	105	-	12	1,55
174 512 00	24	1F	59,75	66,0	61,12	45	95	105	-	12	1,90
174 513 00	26	1F	64,84	71,0	66,21	48	95	105	-	12	2,25
174 514 00	28	1F	69,93	75,0	71,30	50	95	105	-	15	2,55
174 515 00	30	1F	75,02	83,0	76,39	55	95	105	-	15	3,00
174 516 00	32	1F	80,16	87,0	81,49	60	95	105	-	15	3,57
174 517 00	34	1F	85,22	91,0	86,58	66	95	105	-	15	4,00
174 518 00	36	1F	90,30	98,5	91,67	70	95	105	-	15	4,50
174 519 00	38	1F	95,39	103,0	96,77	75	95	105	-	15	5,00
174 520 00	40	1F	100,49	106,0	101,86	75	95	105	-	18	5,20
174 522 00	44	1F	110,67	119,0	112,05	75	95	105	-	18	6,60
174 524 00	48	1F	120,86	127,0	122,23	80	95	105	-	18	7,00
174 528 00	56	1F	141,23	148,0	142,60	90	95	105	-	18	10,00
174 532 00	64	10WF	161,60	168,0	162,97	100	95	-	137	20	10,40
174 536 00	72	10WF	181,97	192,0	183,35	100	95	-	158	20	11,40
174 540 00	80	10W	202,35	-	203,72	110	95	-	180	20	11,10
174 545 00	90	10A	227,81	-	229,18	110	95	-	204	20	12,20
174 556 00	112	10A	283,83	-	285,21	110	95	-	254	24	15,00
174 572 00	144	10A	365,32	-	366,69	110	95	-	336	24	21,50
174 584 00	168	10A	426,44	-	427,81	120	95	-	400	24	24,10
174 596 00	192	10A	487,55	-	488,92	130	95	-	460	24	30,60



Reworking within 24h-service possible. Custom made parts on request.

Mounting Options for Drive Wheels

There are several possibilities for mounting driving wheels (sprockets, V-Belt Pulleys, pulleys, spur gears etc.) or hubs on shafts. Most wheels are stocked with a rather small bore to allow for further machining. Machining works as drilling out, keywaying a.s.o. can be done at extra charge.

Please note: for several shaft diameters a number of sprockets, V-belt pulleys, spur gears and worm-gear sets are in stock "ready-to-install", i.e. with custom bore and keyway or prepared for Taper clamping bushes.



Fixing Pins

A hole is drilled through hub and shaft and both parts are then connected with a fixing pin. Usually only one side of the hub is pre-drilled, then the wheel is pushed onto the shaft and the hole is drilled through both shaft and the other side of the hub. Then the pin is driven in. This mounting method is suitable for low torques.

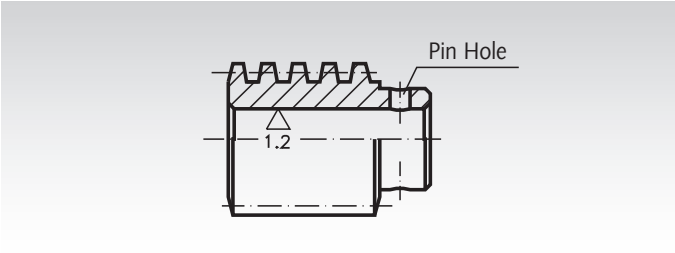

Feather Key Connection

Shaft and hub both receive a keyway, a key is pushed into the keyway of the hub. The wheel is pushed onto the shaft and secured against axial movement (with a set screw or with a stepped shaft and axial screw and washer at the end of the shaft). The most common kind of keyway is DIN 6885/1. Key connections are suitable for medium torques. Keys DIN 6885 see page 578. Boxes with an assortment of keys DIN 6885 see page 577.

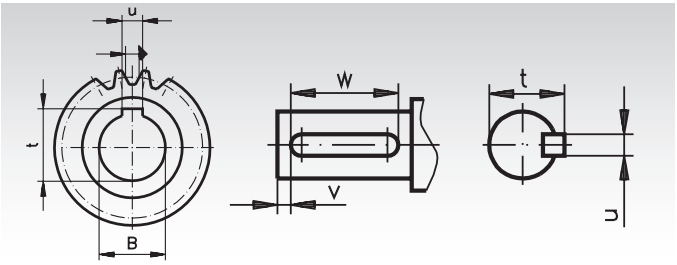

Clamping Sets, Clamping Bushes and Shrink Disks

Clamping sets and thin-walled clamping bushes are available for various diameters. They allow fast and easy mounting on round shafts. A keyway is not required. Shrink disks are special clamping sets which press a thin-walled hub onto a shaft. Clamping connections are suitable for rather high torques. **Clamping sets and bushes, and shrink disks** see page 330.

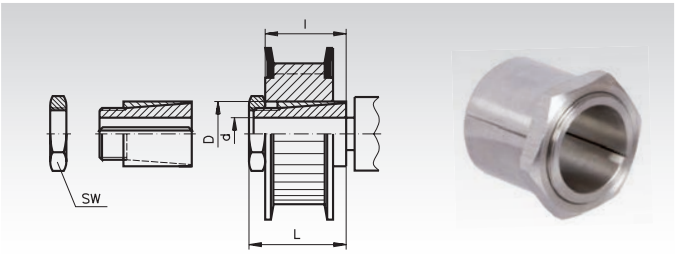

Taper Clamping Bushes

These customary conical bushes are used for easy and fast mounting of driving elements in Taper version. They can be used with and without key.

The bushes are available with various outer dimensions. For every outside measure there are bushes with many different bores available. This mounting method is cost-efficient and fast, and suitable for rather high torques. A large selection of cost-efficient driving elements in Taper version are available ex stock:

- Taper clamping bushes
- Welding hubs for taper bushes
- Taper sprockets
- Taper V-belt pulleys
- Taper pulleys
- Taper couplings.

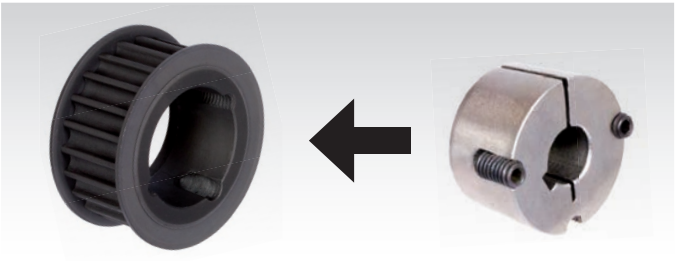

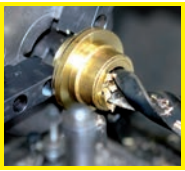

Reworking within 24h-service possible. Custom made parts on request.

HTD Pulleys, Profile 8M for Taper Bushes



Material: Up to a Teeth Number of 72 phosphated steel, from a Teeth Number of 80 phosphated grey cast iron GG20.

Type 10F

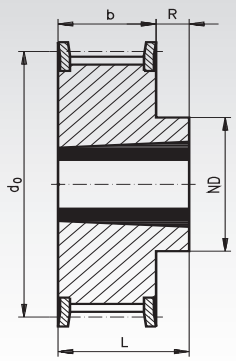

Type 11F

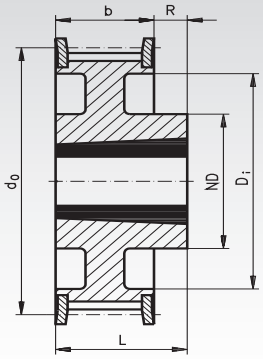

Type 11

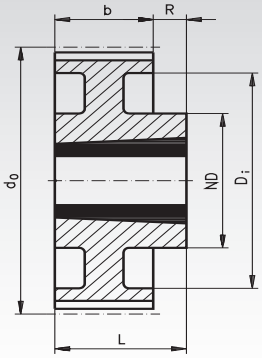

Type 15F

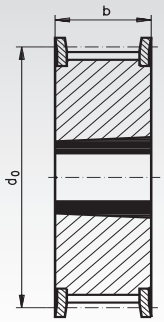

Type 16F

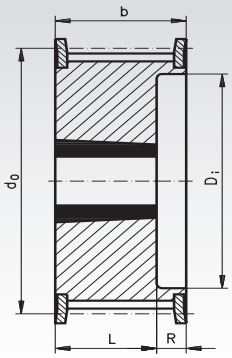

Type 18F

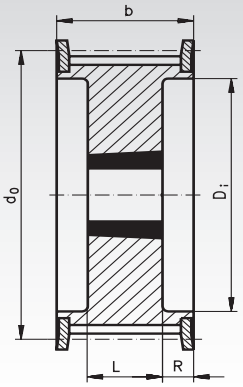

Type 18

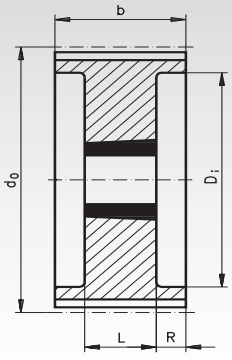

Type 19F

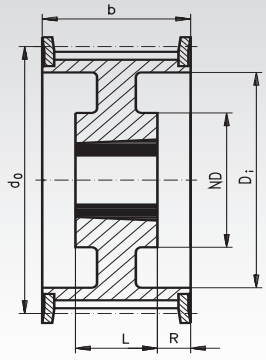

Type 19

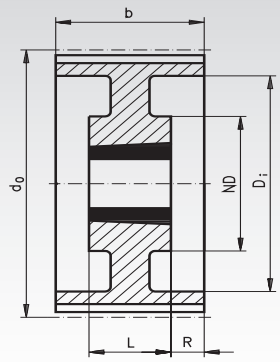

HTD Pulleys, Profile 8M for Taper Bushes

Material: Up to a Teeth Number of 72 phosphated steel, from a Teeth Number of 80 grey cast iron GG20 phosphated. Drawings see page 154.

Timing Belt Width 20 mm

Ordering Details: e.g.: Product No. 174 771 11, Taper-Pulley, 8M, 22 Teeth for Width 20 mm

Product No. 20mm	Number of teeth	Type	d_0 mm	Outside Ø Pulley mm	Outside Ø Flange mm	ND mm	Di mm	b mm	L mm	R mm	Taper Bush Type page 158	Bore Ø min. mm	Bore Ø max. mm	Weight g
174 771 11	22	16F	56,02	54,65	60	-	37	28	22	6	1008	9	25	250
174 771 12	24	16F	61,11	59,74	66	-	44	28	22	6	1108	9	28	300
174 771 13	26	16F	66,21	64,84	71	-	45	28	22	6	1108	9	28	360
174 771 14	28	16F	71,30	70,08	75	-	50	28	22	6	1108	9	28	450
174 771 15	30	16F	76,39	75,13	83	-	58	28	22	6	1108	9	28	550
174 771 16	32	16F	81,49	80,16	87	-	63	28	25	3	1610	12	42	430
174 771 17	34	16F	86,58	85,21	91	-	64	28	25	3	1610	12	42	570
174 771 18	36	16F	91,67	90,30	98	-	68	28	25	3	1610	12	42	700
174 771 19	38	16F	96,77	95,39	103	-	72	28	25	3	1610	12	42	820
174 771 20	40	16F	101,86	100,49	106	-	76	28	25	3	1610	12	42	1100
174 771 22	44	10F	112,05	110,67	119	92	-	28	32	4	2012	12	50	1200
174 771 24	48	10F	122,23	120,86	127	96	-	28	32	4	2012	12	50	1650
174 771 28	56	10F	142,60	141,23	148	110	-	28	32	4	2012	12	50	2500
174 771 32	64	11F	162,97	161,60	168	110	137	28	32	4	2012	12	50	2600
174 771 36	72	11F	183,35	181,97	192	110	158	28	32	4	2012	12	50	3400
174 771 40	80	11	203,72	202,35	-	110	180	28	32	4	2012	12	50	3600
174 771 45	90	11	229,18	227,81	-	110	204	28	32	4	2012	12	50	4100

Timing Belt Width 30 mm

Ordering Details: e.g.: Product No. 174 772 11, Taper-Pulley, 8M, 22 Teeth for Width 30 mm

Product No. 30mm	Number of teeth	Type	d_0 mm	Outside Ø Pulley mm	Outside Ø Flange mm	ND mm	Di mm	b mm	L mm	R mm	Taper Bush Type page 158	Bore Ø min. mm	Bore Ø max. mm	Weight g
174 772 11	22	16F	56,02	54,65	60	-	37	38	22	16	1008	9	25	330
174 772 12	24	16F	61,11	59,74	66	-	44	38	22	16	1108	9	28	400
174 772 13	26	16F	66,21	64,84	71	-	44	38	22	16	1108	9	28	450
174 772 14	28	16F	71,30	70,08	75	-	50	38	25	13	1210	10	32	500
174 772 15	30	15F	76,39	75,13	83	-	-	38	38	-	1615	12	42	550
174 772 16	32	15F	81,49	80,16	87	-	-	38	38	-	1615	12	42	600
174 772 17	34	15F	86,58	85,21	91	-	-	38	38	-	1615	12	42	800
174 772 18	36	15F	91,67	90,30	98	-	-	38	38	-	1615	12	42	1000
174 772 19	38	15F	96,77	95,39	103	-	-	38	38	-	1615	12	42	1100
174 772 20	40	15F	101,86	100,49	106	-	-	38	38	-	1615	12	42	1340
174 772 22	44	18F	112,05	110,67	119	-	86	38	32	3	2012	12	50	1300
174 772 24	48	18F	122,23	120,86	127	-	90	38	32	3	2012	12	50	1800
174 772 28	56	18F	142,60	141,23	148	-	110	38	32	3	2012	12	50	3800
174 772 32	64	10F	162,97	161,60	168	125	-	38	45	7	2517	15	65	4300
174 772 36	72	11F	183,35	181,97	192	125	158	38	45	7	2517	15	65	4400
174 772 40	80	11	203,72	202,35	-	125	180	38	45	7	2517	15	65	4650
174 772 45	90	11	229,18	227,81	-	125	204	38	45	7	2517	15	65	5800

Timing Belt Width 50 mm

Ordering Details: e.g.: Product No. 174 774 14, Taper-Pulley, 8M, 28 Teeth for Width 50 mm

Product No. 50mm	Number of teeth	Type	d_0 mm	Outside Ø Pulley mm	Outside Ø Flange mm	ND mm	Di mm	b mm	L mm	R mm	Taper Bush Type page 158	Bore Ø min. mm	Bore Ø max. mm	Weight g
174 774 14	28	16F	71,30	70,08	75	-	50	60	25	35	1210	10	32	600
174 774 15	30	16F	76,39	75,13	83	-	58	60	38	22	1615	12	42	650
174 774 16	32	16F	81,49	80,16	87	-	63	60	38	22	1615	12	42	800
174 774 17	34	16F	86,58	85,21	91	-	65	60	38	22	1615	12	42	1080
174 774 18	36	16F	91,67	90,30	98	-	68	60	38	22	1615	12	42	1350
174 774 19	38	16F	96,77	95,39	103	-	72	60	38	22	1615	12	42	1650
174 774 20	40	18F	101,86	100,49	106	-	80	60	32	14	2012	12	50	1700
174 774 22	44	18F	112,05	110,67	119	-	86	60	32	14	2012	12	50	1800
174 774 24	48	18F	122,23	120,86	127	-	95	60	32	14	2012	12	50	2350
174 774 28	56	18F	142,60	141,23	148	-	116	60	45	7,5	2517	15	65	3350
174 774 32	64	18F	162,97	161,60	168	-	136	60	45	7,5	2517	15	65	4900
174 774 36	72	19F	183,35	181,97	192	125	158	60	45	7,5	2517	15	65	6900
174 774 40	80	18	203,72	202,35	-	-	180	60	51	4,5	3020	20	75	8900
174 774 45	90	19	229,18	227,81	-	160	204	60	51	4,5	3020	20	75	9900

Matching Taper bushes see page 158.
Mounting instructions see page 824.

HTD Pulleys, Profile 14M for Taper Bushes



Material: Up to a Teeth Number of 56 phosphated steel, from a Teeth Number of 64 phosphated grey cast iron GG20.

Type 18F

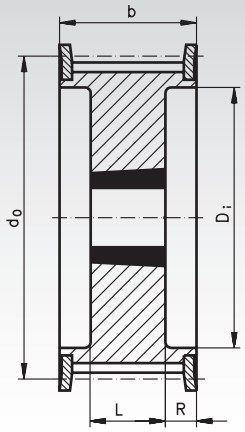

Type 19F

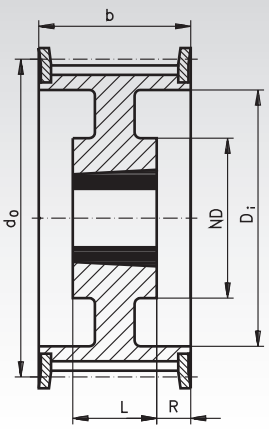

Type 19

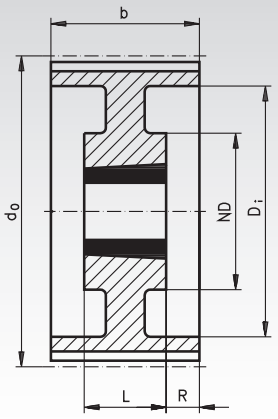

Type 20

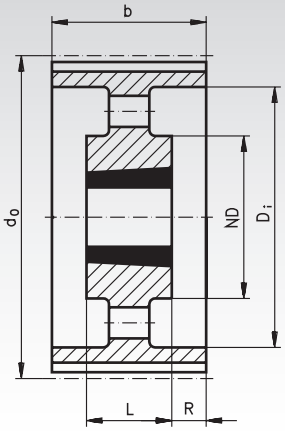

HTD Pulleys, Profile 14M for Taper Bushes

Material: Up to a Teeth Number of 56 phosphated steel, from a Teeth Number of 64 phosphated grey cast iron GG20. Drawings see page 156.

Timing Belt Width 40 mm

Ordering Details: e.g.: Product No. 176 771 14, Taper-Pulley 14M, 28 Teeth for Width 40 mm

Product No. 40mm	Number of teeth	Type	d_0 mm	Outside Ø Pulley mm	Outside Ø Flange mm	ND mm	Di mm	b mm	L mm	R mm	Taper Bush Type page 158	Bore Ø min. mm	Bore Ø max. mm	Weight kg
176 771 14	28	18F	124,78	122,12	127	-	94	54	32	11	2012	12	50	2,1
176 771 15	30	18F	133,69	130,99	138	-	98	54	32	11	2012	12	50	2,7
176 771 16	32	18F	142,60	139,88	154	-	108	54	32	11	2012	12	50	3,4
176 771 17	34	18F	151,52	148,79	160	-	110	54	45	4,5	2517	15	65	3,9
176 771 18	36	18F	160,43	157,68	168	-	120	54	45	4,5	2517	15	65	4,8
176 771 19	38	18F	169,34	166,60	183	-	130	54	45	4,5	2517	15	65	5,4
176 771 20	40	18F	178,25	175,49	188	-	138	54	45	4,5	2517	15	65	6,0
176 771 22	44	18F	196,08	193,28	211	-	155	54	51	1,5	3020	20	75	7,5
176 771 24	48	18F	213,90	211,11	226	-	170	54	51	1,5	3020	20	75	8,5
176 771 28	56	18F	249,55	246,76	256	-	208	54	51	1,5	3020	20	75	10,1
176 771 36	72	19	320,86	318,06	-	170	280	54	51	1,5	3020	20	75	15,0
176 771 40	80	20	356,51	353,71	-	170	315	54	51	1,5	3020	20	75	16,0
176 771 45	90	20	401,07	398,28	-	170	360	54	51	1,5	3020	20	75	18,0

Timing Belt Width 55 mm

Ordering Details: e.g.: Product No. 176 772 14, Taper-Pulley 14M, 28 Teeth for Width 55 mm

Product No. 55mm	Number of teeth	Type	d_0 mm	Outside Ø Pulley mm	Outside Ø Flange mm	ND mm	Di mm	b mm	L mm	R mm	Taper Bush Type page 158	Bore Ø min. mm	Bore Ø max. mm	Weight kg
176 772 14	28	18F	124,78	122,12	127	-	94	70	32	19	2012	12	50	2,2
176 772 15	30	18F	133,69	130,99	138	-	98	70	45	12,5	2517	15	65	2,7
176 772 16	32	18F	142,60	139,88	154	-	108	70	45	12,5	2517	15	65	3,6
176 772 17	34	18F	151,52	148,79	160	-	110	70	45	12,5	2517	15	65	4,5
176 772 18	36	18F	160,43	157,68	168	-	120	70	45	12,5	2517	15	65	5,2
176 772 19	38	18F	169,34	166,60	183	-	130	70	45	12,5	2517	15	65	6,2
176 772 20	40	18F	178,25	175,49	188	-	138	70	45	12,5	2517	15	65	6,9
176 772 22	44	18F	196,08	193,28	211	-	155	70	51	9,5	3020	20	75	8,6
176 772 24	48	18F	213,90	211,11	226	-	170	70	51	9,5	3020	20	75	10,5
176 772 28	56	18F	249,55	246,76	256	-	208	70	51	9,5	3020	20	75	13,5
176 772 32	64	19F	285,21	282,41	296	170	240	70	51	9,5	3020	20	75	14,5
176 772 36	72	19	320,86	318,06	-	170	280	70	51	9,5	3020	20	75	16,3
176 772 40	80	20	356,51	353,71	-	170	315	70	51	9,5	3020	20	75	17,5
176 772 45	90	20	401,07	398,28	-	170	360	70	51	9,5	3020	20	75	20,0

Timing Belt Width 85 mm

Ordering Details: e.g.: Product No. 176 773 14, Taper-Pulley 14M, 28 Teeth for Width 85 mm

Product No. 85mm	Number of teeth	Type	d_0 mm	Outside Ø Pulley mm	Outside Ø Flange mm	ND mm	Di mm	b mm	L mm	R mm	Taper Bush Type page 158	Bore Ø min. mm	Bore Ø max. mm	Weight kg
176 773 14	28	18F	124,78	122,12	127	-	98	102	45	28,5	2517	15	65	2,7
176 773 15	30	18F	133,69	130,99	138	-	100	102	45	28,5	2517	15	65	3,8
176 773 16	32	18F	142,60	139,88	154	-	108	102	45	28,5	2517	15	65	4,7
176 773 17	34	18F	151,52	148,79	160	-	110	102	45	28,5	2517	15	65	6,0
176 773 18	36	18F	160,43	157,68	168	-	125	102	51	25,5	3020	20	75	5,7
176 773 19	38	18F	169,34	166,60	183	-	130	102	51	25,5	3020	20	75	6,8
176 773 20	40	18F	178,25	175,49	188	-	138	102	51	25,5	3020	20	75	8,0
176 773 22	44	18F	196,08	193,28	211	-	155	102	76	13,0	3030	30	75	11,7
176 773 24	48	18F	213,90	211,11	226	-	170	102	76	13,0	3030	30	75	15,0
176 773 28	56	18F	249,55	246,76	256	-	210	102	65	18,5	3525	35	90	19,0
176 773 32	64	19F	285,21	282,41	296	190	240	102	65	18,5	3525	35	90	23,5
176 773 36	72	19	320,86	318,06	-	190	280	102	65	18,5	3525	35	90	25,0
176 773 40	80	20	356,51	353,71	-	190	315	102	65	18,5	3525	35	90	26,0
176 773 45	90	20	401,07	398,28	-	190	360	102	65	18,5	3525	35	90	28,0

Matching Taper bushes see page 158.
Mounting instructions see page 824.

Taper Bushes

Material: GG25.
Bores ISO E8, feather keyways in accordance with DIN 6885/1.
Screws included in delivery.

Shaft tolerance +0.05/-0.125 mm.
Can be used with or without parallel key, depending on the required torque.

Other bush sizes and bores available at short notice (some in stock).

Assembly instructions see page 824.

Ordering Details: e.g.: Product No. 622 501 09, Taper Bush 1008, 9 mm Bore

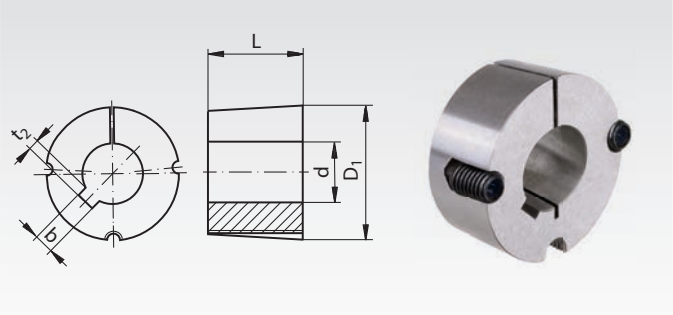

Product No.	Taper bush No.	Bore d mm	Keyway b mm	t_2 mm	L mm	D_1 mm	Weight kg
622 501 09	1008	9	3	1,4	22,3	35,2	0,175
622 501 10	1008	10	3	1,4	22,3	35,2	0,160
622 501 11	1008	11	4	1,8	22,3	35,2	0,140
622 501 12	1008	12	4	1,8	22,3	35,2	0,120
622 501 14	1008	14	5	2,3	22,3	35,2	0,118
622 501 15	1008	15	5	2,3	22,3	35,2	0,116
622 501 16	1008	16	5	2,3	22,3	35,2	0,112
622 501 18	1008	18	6	2,8	22,3	35,2	0,100
622 501 19	1008	19	6	2,8	22,3	35,2	0,098
622 501 20	1008	20	6	2,8	22,3	35,2	0,094
622 501 22	1008	22	6	2,8	22,3	35,2	0,080
622 501 24[1)]	1008	24	8	1,3[1)]	22,3	35,2	0,070
622 501 25[1)]	1008	25	8	1,3[1)]	22,3	35,2	0,068
622 502 09	1108	9	3	1,4	22,3	38,4	0,195
622 502 10	1108	10	3	1,4	22,3	38,4	0,180
622 502 11	1108	11	4	1,8	22,3	38,4	0,165
622 502 12	1108	12	4	1,8	22,3	38,4	0,154
622 502 14	1108	14	5	2,3	22,3	38,4	0,148
622 502 15	1108	15	5	2,3	22,3	38,4	0,145
622 502 16	1108	16	5	2,3	22,3	38,4	0,140
622 502 17	1108	17	5	2,3	22,3	38,4	0,136
622 502 18	1108	18	6	2,8	22,3	38,4	0,132
622 502 19	1108	19	6	2,8	22,3	38,4	0,126
622 502 20	1108	20	6	2,8	22,3	38,4	0,122
622 502 22	1108	22	6	2,8	22,3	38,4	0,112
622 502 24	1108	24	8	3,3	22,3	38,4	0,096
622 502 25	1108	25	8	3,3	22,3	38,4	0,092
622 502 28[1)]	1108	28	8	1,3[1)]	22,3	38,4	0,088
622 503 10	1210	10	3	1,4	25,4	47,5	0,282
622 503 11	1210	11	4	1,8	25,4	47,5	0,280
622 503 12	1210	12	4	1,8	25,4	47,5	0,278
622 503 14	1210	14	5	2,3	25,4	47,5	0,274
622 503 15	1210	15	5	2,3	25,4	47,5	0,267
622 503 16	1210	16	5	2,3	25,4	47,5	0,262
622 503 17	1210	17	5	2,3	25,4	47,5	0,257
622 503 18	1210	18	6	2,8	25,4	47,5	0,250
622 503 19	1210	19	6	2,8	25,4	47,5	0,244
622 503 20	1210	20	6	2,8	25,4	47,5	0,240
622 503 22	1210	22	6	2,8	25,4	47,5	0,224
622 503 24	1210	24	8	3,3	25,4	47,5	0,208
622 503 25	1210	25	8	3,3	25,4	47,5	0,198
622 503 28	1210	28	8	3,3	25,4	47,5	0,184
622 503 30	1210	30	8	3,3	25,4	47,5	0,168
622 503 32	1210	32	10	3,3	25,4	47,5	0,160
622 513 14	1215	14	5	2,3	38,1	47,5	0,380
622 513 16	1215	16	5	2,3	38,1	47,5	0,370
622 513 18	1215	18	6	2,8	38,1	47,5	0,350
622 513 19	1215	19	6	2,8	38,1	47,5	0,340
622 513 20	1215	20	6	2,8	38,1	47,5	0,335
622 513 22	1215	22	6	2,8	38,1	47,5	0,320
622 513 24	1215	24	8	3,3	38,1	47,5	0,290
622 513 25	1215	25	8	3,3	38,1	47,5	0,285
622 513 28	1215	28	8	3,3	38,1	47,5	0,260
622 513 30	1215	30	8	3,3	38,1	47,5	0,230
622 513 32	1215	32	10	3,3	38,1	47,5	0,200

Product No.	Taper bush No.	Bore d mm	Keyway b mm	t_2 mm	L mm	D_1 mm	Weight kg
622 504 12	1610	12	4	1,8	25,4	57	0,416
622 504 14	1610	14	5	2,3	25,4	57	0,412
622 504 15	1610	15	5	2,3	25,4	57	0,408
622 504 16	1610	16	5	2,3	25,4	57	0,402
622 504 17	1610	17	5	2,3	25,4	57	0,397
622 504 18	1610	18	6	2,8	25,4	57	0,390
622 504 19	1610	19	6	2,8	25,4	57	0,380
622 504 20	1610	20	6	2,8	25,4	57	0,373
622 504 22	1610	22	6	2,8	25,4	57	0,366
622 504 24	1610	24	8	3,3	25,4	57	0,356
622 504 25	1610	25	8	3,3	25,4	57	0,348
622 504 28	1610	28	8	3,3	25,4	57	0,324
622 504 30	1610	30	8	3,3	25,4	57	0,304
622 504 32	1610	32	10	3,3	25,4	57	0,280
622 504 35	1610	35	10	3,3	25,4	57	0,264
622 504 38	1610	38	10	3,3	25,4	57	0,240
622 504 40	1610	40	12	3,3	25,4	57	0,210
622 504 42	1610	42	12	3,3	25,4	57	0,200
622 508 12	1615	12	4	1,8	38,1	57	0,590
622 508 14	1615	14	5	2,3	38,1	57	0,580
622 508 15	1615	15	5	2,3	38,1	57	0,580
622 508 16	1615	16	5	2,3	38,1	57	0,580
622 508 18	1615	18	6	2,8	38,1	57	0,561
622 508 19	1615	19	6	2,8	38,1	57	0,557
622 508 20	1615	20	6	2,8	38,1	57	0,552
622 508 22	1615	22	6	2,8	38,1	57	0,540
622 508 24	1615	24	8	3,3	38,1	57	0,520
622 508 25	1615	25	8	3,3	38,1	57	0,510
622 508 28	1615	28	8	3,3	38,1	57	0,470
622 508 30	1615	30	8	3,3	38,1	57	0,446
622 508 32	1615	32	10	3,3	38,1	57	0,414
622 508 35	1615	35	10	3,3	38,1	57	0,380
622 508 38	1615	38	10	3,3	38,1	57	0,346
622 508 40	1615	40	12	3,3	38,1	57	0,340
622 508 42[1)]	1615	42	12	2,2[1)]	38,1	57	0,260
622 505 12	2012	12	4	1,8	31,8	70	0,810
622 505 14	2012	14	5	2,3	31,8	70	0,800
622 505 15	2012	15	5	2,3	31,8	70	0,785
622 505 16	2012	16	5	2,3	31,8	70	0,770
622 505 18	2012	18	6	2,8	31,8	70	0,762
622 505 19	2012	19	6	2,8	31,8	70	0,756
622 505 20	2012	20	6	2,8	31,8	70	0,750
622 505 22	2012	22	6	2,8	31,8	70	0,736
622 505 24	2012	24	8	3,3	31,8	70	0,724
622 505 25	2012	25	8	3,3	31,8	70	0,714
622 505 28	2012	28	8	3,3	31,8	70	0,684
622 505 30	2012	30	8	3,3	31,8	70	0,658
622 505 32	2012	32	10	3,3	31,8	70	0,630
622 505 35	2012	35	10	3,3	31,8	70	0,604
622 505 38	2012	38	10	3,3	31,8	70	0,566
622 505 40	2012	40	12	3,3	31,8	70	0,538
622 505 42	2012	42	12	3,3	31,8	70	0,510
622 505 45	2012	45	14	3,8	31,8	70	0,460
622 505 48	2012	48	14	3,8	31,8	70	0,404
622 505 50	2012	50	14	3,8	31,8	70	0,372

[1)] With flat keyway.

Taper Bushes

Material: GG25.
Bores ISO E8, feather keyways in accordance with DIN 6885/1.
Screws included in delivery. From size 3525 with three screws.

Shaft tolerance +0.05/-0.125 mm.
Can be used with or without parallel key, depending on the required torque.

Other bush sizes and bores available at short notice (some in stock).

Assembly instructions see page 824.

Ordering Details: e.g.: Product No. 622 506 15, Taper Bush 2517, 15 mm Bore

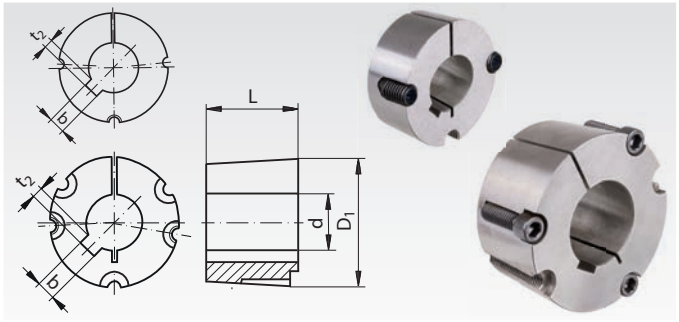

Product No.	Taper bush No.	Bore d mm	Keyway b mm	t_2 mm	L mm	D_1 mm	Weight kg
622 506 15	2517	15	5	2,3	44,5	85,5	1,85
622 506 16	2517	16	5	2,3	44,5	85,5	1,80
622 506 18	2517	18	6	2,8	44,5	85,5	1,70
622 506 19	2517	19	6	2,8	44,5	85,5	1,62
622 506 20	2517	20	6	2,8	44,5	85,5	1,60
622 506 22	2517	22	6	2,8	44,5	85,5	1,57
622 506 24	2517	24	8	3,3	44,5	85,5	1,57
622 506 25	2517	25	8	3,3	44,5	85,5	1,56
622 506 28	2517	28	8	3,3	44,5	85,5	1,52
622 506 30	2517	30	8	3,3	44,5	85,5	1,49
622 506 32	2517	32	10	3,3	44,5	85,5	1,45
622 506 35	2517	35	10	3,3	44,5	85,5	1,40
622 506 38	2517	38	10	3,3	44,5	85,5	1,35
622 506 40	2517	40	12	3,3	44,5	85,5	1,32
622 506 42	2517	42	12	3,3	44,5	85,5	1,27
622 506 45	2517	45	14	3,8	44,5	85,5	1,20
622 506 48	2517	48	14	3,8	44,5	85,5	1,13
622 506 50	2517	50	14	3,8	44,5	85,5	1,08
622 506 55	2517	55	16	4,3	44,5	85,5	0,96
622 506 60	2517	60	18	4,4	44,5	85,5	0,81
622 506 65[1)]	2517	65	18	3,4[1)]	44,5	85,5	0,65
622 507 20	3020	20	6	2,8	50,8	108	3,00
622 507 25	3020	25	8	3,3	50,8	108	2,91
622 507 28	3020	28	8	3,3	50,8	108	2,79
622 507 30	3020	30	8	3,3	50,8	108	2,84
622 507 32	3020	32	10	3,3	50,8	108	2,80
622 507 35	3020	35	10	3,3	50,8	108	2,75
622 507 38	3020	38	10	3,3	50,8	108	2,70
622 507 40	3020	40	12	3,3	50,8	108	2,64
622 507 42	3020	42	12	3,3	50,8	108	2,59
622 507 45	3020	45	14	3,8	50,8	108	2,52
622 507 48	3020	48	14	3,8	50,8	108	2,43
622 507 50	3020	50	14	3,8	50,8	108	2,37
622 507 55	3020	55	16	4,3	50,8	108	2,23
622 507 60	3020	60	18	4,4	50,8	108	2,00
622 507 65	3020	65	18	4,4	50,8	108	1,89
622 507 70	3020	70	20	4,9	50,8	108	1,70
622 507 75	3020	75	20	4,9	50,8	108	1,49
622 511 30	3030	30	8	3,3	76,2	108	4,05
622 511 35	3030	35	10	3,3	76,2	108	3,95
622 511 38	3030	38	10	3,3	76,2	108	3,86
622 511 40	3030	40	12	3,3	76,2	108	3,82
622 511 42	3030	42	12	3,3	76,2	108	3,69
622 511 45	3030	45	14	3,8	76,2	108	3,55
622 511 48	3030	48	14	3,8	76,2	108	3,45
622 511 50	3030	50	14	3,8	76,2	108	3,42
622 511 55	3030	55	16	4,3	76,2	108	3,18
622 511 60	3030	60	18	4,4	76,2	108	2,95
622 511 65	3030	65	18	4,4	76,2	108	2,68
622 511 70	3030	70	20	4,9	76,2	108	2,06
622 511 75	3030	75	20	4,9	76,2	108	1,64

[1)] With flat keyway.

Product No.	Taper bush No.	Bore d mm	Keyway b mm	t_2 mm	L mm	D_1 mm	Weight kg
622 509 35	3525	35	10	3,3	63,5	127	4,91
622 509 38	3525	38	10	3,3	63,5	127	4,85
622 509 40	3525	40	12	3,3	63,5	127	4,80
622 509 42	3525	42	12	3,3	63,5	127	4,71
622 509 45	3525	45	14	3,8	63,5	127	4,67
622 509 48	3525	48	14	3,8	63,5	127	4,55
622 509 50	3525	50	14	3,8	63,5	127	4,44
622 509 55	3525	55	16	4,3	63,5	127	4,29
622 509 60	3525	60	18	4,4	63,5	127	4,05
622 509 65	3525	65	18	4,4	63,5	127	3,88
622 509 70	3525	70	20	4,9	63,5	127	3,58
622 509 75	3525	75	20	4,9	63,5	127	3,37
622 509 80	3525	80	22	5,4	63,5	127	3,05
622 509 85	3525	85	22	5,4	63,5	127	2,77
622 509 90	3525	90	25	5,4	63,5	127	2,47
622 510 30	3535	30	8	3,3	89,0	127	6,95
622 510 35	3535	35	10	3,3	89,0	127	6,70
622 510 38	3535	38	10	3,3	89,0	127	6,53
622 510 40	3535	40	12	3,3	89,0	127	6,48
622 510 42	3535	42	12	3,3	89,0	127	6,40
622 510 45	3535	45	14	3,8	89,0	127	6,25
622 510 48	3535	48	14	3,8	89,0	127	6,17
622 510 50	3535	50	14	3,8	89,0	127	6,05
622 510 55	3535	55	16	4,3	89,0	127	5,81
622 510 60	3535	60	18	4,4	89,0	127	5,50
622 510 65	3535	65	18	4,4	89,0	127	5,20
622 510 70	3535	70	20	4,9	89,0	127	4,88
622 510 75	3535	75	20	4,9	89,0	127	4,46
622 510 80	3535	80	22	5,4	89,0	127	4,08
622 510 85	3535	85	22	5,4	89,0	127	3,67
622 510 90	3535	90	25	5,4	89,0	127	3,21
622 512 40	4030	40	12	3,3	76,2	146	8,92
622 512 42	4030	42	12	3,3	76,2	146	8,80
622 512 45	4030	45	14	3,8	76,2	146	8,67
622 512 48	4030	48	14	3,8	76,2	146	8,49
622 512 50	4030	50	14	3,8	76,2	146	8,33
622 512 55	4030	55	16	4,3	76,2	146	8,15
622 512 60	4030	60	18	4,4	76,2	146	7,85
622 512 65	4030	65	18	4,4	76,2	146	7,60
622 512 70	4030	70	20	4,9	76,2	146	7,18
622 512 75	4030	75	20	4,9	76,2	146	6,84
622 512 80	4030	80	22	5,4	76,2	146	6,46
622 512 85	4030	85	22	5,4	76,2	146	6,06
622 512 90	4030	90	25	5,4	76,2	146	5,59
622 512 91	4030	100	28	6,4	76,2	146	4,63
622 514 40	4040	40	12	3,3	102,0	146	10,19
622 514 42	4040	42	12	3,3	102,0	146	10,03
622 514 45	4040	45	14	3,8	102,0	146	9,86
622 514 48	4040	48	14	3,8	102,0	146	9,66
622 514 50	4040	50	14	3,8	102,0	146	9,48
622 514 55	4040	55	16	4,3	102,0	146	9,27
622 514 60	4040	60	18	4,4	102,0	146	8,93
622 514 65	4040	65	18	4,4	102,0	146	8,65
622 514 70	4040	70	20	4,9	102,0	146	8,17
622 514 75	4040	75	20	4,9	102,0	146	7,78
622 514 80	4040	80	22	5,4	102,0	146	7,35
622 514 85	4040	85	22	5,4	102,0	146	6,89
622 514 90	4040	90	25	5,4	102,0	146	6,36
622 514 95	4040	95	25	5,4	102,0	146	5,94
622 514 91	4040	100	28	6,4	102,0	146	5,27

Taper Bushes

Material: GG25.
Bores ISO E8, feather keyways in accordance with DIN 6885/1.
Screws included in delivery.

Shaft tolerance +0.05/-0.125 mm.
Can be used with or without parallel key, depending on the required torque.

Other bush sizes and bores available at short notice (some in stock).

Assembly instructions see page 824.

Ordering Details: e.g.: Product No. 622 515 55, Taper Bush 4545, 55 mm Bore

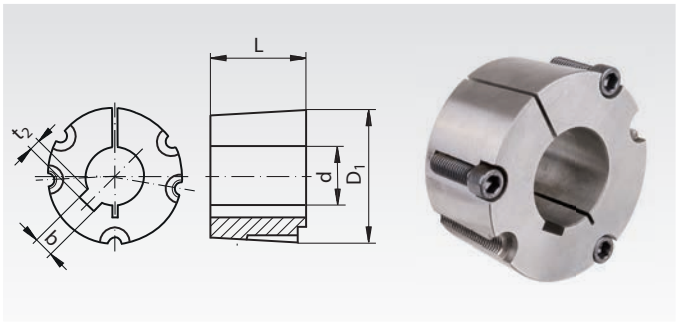

Product No.	Taper bush No.	Bore d mm	Keyway b mm	t_2 mm	L mm	D_1 mm	Weight kg
622 515 55	4545	55	16	4,3	114	162	13,2
622 515 60	4545	60	18	4,4	114	162	12,8
622 515 65	4545	65	18	4,4	114	162	12,4
622 515 70	4545	70	20	4,9	114	162	12,0
622 515 75	4545	75	20	4,9	114	162	11,6
622 515 80	4545	80	22	5,4	114	162	11,0
622 515 85	4545	85	22	5,4	114	162	10,5
622 515 90	4545	90	25	5,4	114	162	10,0
622 515 95	4545	95	25	5,4	114	162	9,4
622 515 91	4545	100	28	6,4	114	162	8,6
622 515 93	4545	110	28	6,4	114	162	7,2

Product No.	Taper bush No.	Bore d mm	Keyway b mm	t_2 mm	L mm	D_1 mm	Weight kg
622 516 70	5050	70	20	4,9	127	178,0	16,7
622 516 75	5050	75	20	4,9	127	178,0	16,1
622 516 80	5050	80	22	5,4	127	178,0	15,6
622 516 85	5050	85	22	5,4	127	178,0	15,0
622 516 90	5050	90	25	5,4	127	178,0	14,4
622 516 95	5050	95	25	5,4	127	178,0	13,9
622 516 91	5050	100	28	6,4	127	178,0	13,1
622 516 92	5050	105	28	6,4	127	178,0	12,5
622 516 93	5050	110	28	6,4	127	178,0	11,6
622 516 94	5050	115	32	7,4	127	178,0	11,0
622 516 96	5050	120	32	7,4	127	178,0	9,8
622 516 97	5050	125	32	7,4	127	178,0	9,1

Spare Screws for Taper Bushes

Material: Steel. **Supply:** One screw (order quantity as needed).
Taper bushes have two or (from size 3525) three screws depending on size.

Ordering Details: e.g.: Product No. 622 501 99, Spare Screw , Taper Bush 1008 and 1108

Product No.	to match Taper bush	Size inch	Screw type	Tightening Torque Nm	Weight g
622 501 99	1008 ; 1108	1/4" x 1/2"	Grub screw with internal hexagon	5,6	1,9
622 503 99	1210 - 1615	3/8" x 5/8"	Grub screw with internal hexagon	20	5,2
622 505 99	2012 ; 2017	7/16" x 7/8"	Grub screw with internal hexagon	30	11,0
622 506 99	2517 ; 2525	1/2" x 1"	Grub screw with internal hexagon	50	16,4
622 507 99	3020 ; 3030	5/8" x 1 1/4"	Grub screw with internal hexagon	90	33,2
622 510 99	3525 ; 3535	1/2" x 1 1/2"	Hexagon socket head cap screws	112	47,3
622 512 99	4030 ; 4040	5/8" x 1 3/4"	Hexagon socket head cap screws	170	89,0
622 515 99	4545	3/4" x 2"	Hexagon socket head cap screws	190	147
622 516 99	5050	7/8" x 2 1/4"	Hexagon socket head cap screws	270	227

Welding Hubs for Taper Bushes

Material: Steel (St52 or comparable), good weldable.

Hub for fixing a chain plate wheel or similar parts with a low priced taper bush onto a shaft.
Taper bush and chain plate wheel have to be ordered separately.
Recommended bore tolerance: H8.

Before welding, a taper bush should be mounted with a piece of shaft into the welding hub to avoid deforming by heat.

Ordering Details: e.g.: Product No. 140 901 01, Welding Hub for Taper Bush 1210

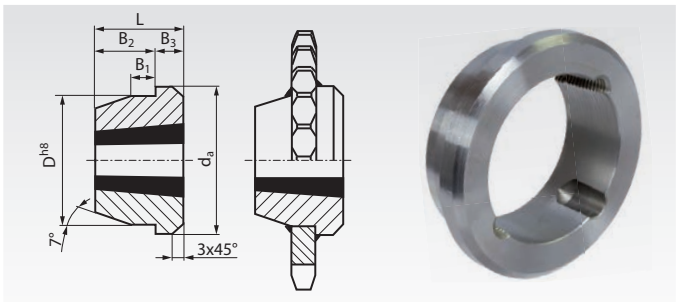

Product No.	For Taper Bush Type	d_a mm	D^{h8} mm	B_1 mm	B_2 mm	B_3 mm	L mm	Weight kg	Taper Bush bore Ø min.	max.
140 901 01	1210	73	60	10	16	9	25	0,31	10	32
140 901 02	1215	76	60	11	22	16	38	0,50	14	32
140 901 03	1610	83	70	10	16	9	25	0,37	12	42
140 901 04	1615	83	70	11	22	16	38	0,60	12	42
140 901 05	2012	96	90	12	22	10	32	0,72	12	50
140 901 06	2517	127	110	13	26	19	45	1,8	15	65
140 901 07	3020	152	130	18	27	24	51	2,6	20	75
140 901 08	3030	152	130	19	51	25	76	3,6	30	75
140 901 09	3525	184	155	25	40	25	65	7,3	35	90
140 901 10	3535	184	155	25	57	32	89	6,4	30	90
140 901 11	4040	225	195	35	70	32	102	13,4	40	100
140 901 12	4545	254	220	40	76	38	114	20,0	55	110
140 901 13	5050	276	242	40	89	38	127	25,0	70	125

Standard Pulleys, Inch Pitch DIN 5294

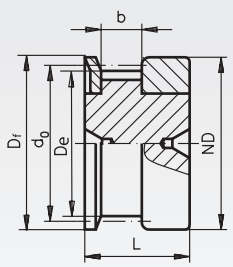

Type OF

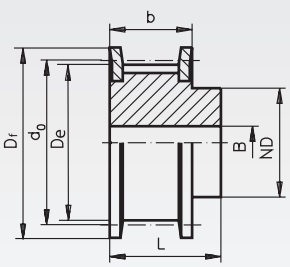

Type 1F

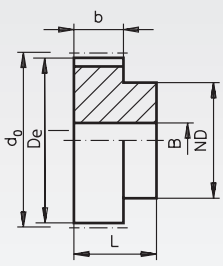

Type 2



Material: Aluminium UNI 3571-T16.
Flanges zinc-plated steel. Pre-bored (from a Teeth Number of 22).

Ordering Details: e.g.: Product No. 181 316 00, Pulleys, Pitch MXL, 16 Teeth, Timing-Belt Width 025

Pulleys, Pitch MXL = 0.08" (2.032 mm) for Timing Belt Width 025 = 6.35 mm

Product No.	Type	Number of teeth	D_e mm	d_0 mm	D_f mm	ND mm	b mm	L mm	B mm	Weight g
181 316 00	0F	16	9,84	10,35	15	15	8,5	16	-	4
181 318 00	0F	18	11,13	11,64	16	16	8,5	16	-	5
181 320 00	0F	20	12,43	12,94	16	16	8,5	16	-	5,5
181 322 00	1F	22	13,72	14,23	18	10	11	16	3	6
181 324 00	1F	24	15,02	15,52	18	10	11	16	3	8
181 328 00	1F	28	17,60	18,11	23	11	11	16	3	12
181 330 00	1F	30	18,90	19,40	23	12	11	16	4	13
181 332 00	1F	32	20,19	20,70	25	14	11	16	4	14
181 336 00	1F	36	22,78	23,29	28	16	11	16	4	18
181 340 00	1F	40	25,36	25,87	32	18	11	16	4	21
181 342 00	1F	42	26,66	27,17	32	18	11	16	5	24
181 344 00	1F	44	27,95	28,46	36	18	11	16	5	26
181 348 00	2	48	30,54	31,05	-	20	11	16	5	32
181 360 00	2	60	38,30	38,81	-	24	11	16	5	50
181 372 00	2	72	46,06	46,57	-	25	11	16	6	70



Reworking within 24h-service possible. Custom made parts on request.

Standard Pulleys, Inch Pitch DIN 5294

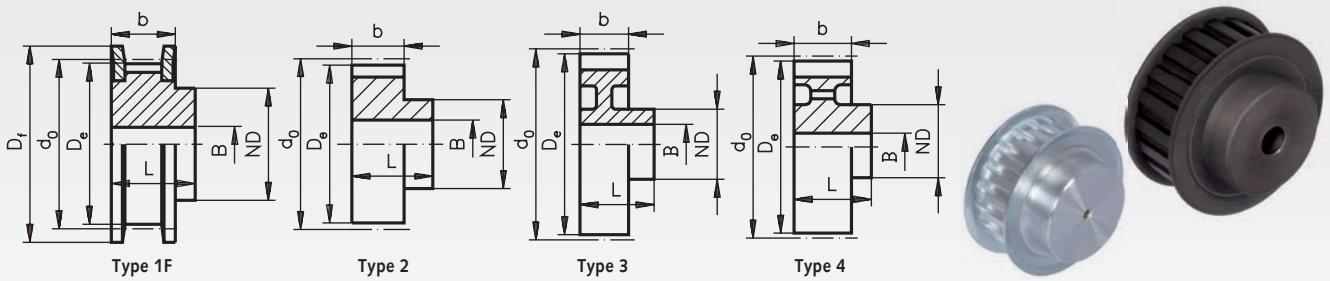

Material at Pitch XL: Aluminium 6082-T6, UNI 9006, flanges zinc-plated steel. Pre-bored*.

Material at Pitch L: Up to a Teeth Number of 48 phosphated steel, from a Teeth Number of 50 grey cast iron GG20. Pre-bored.

Ordering Details: e.g.: Product No. 180 310 00, Pulleys, Pitch XL = 1/5", 10 Teeth, Timing Belt Width 037, 2 Flanges

Pitch XL = 1/5" (5.08 mm) for Timing Belt Width 037 = 9.53 mm

Product No.	Type	Number of teeth	D_e mm	d_0 mm	D_f mm	ND mm	b mm	L mm	B mm	Weight g
180 310 00	1F	10	15,66	16,17	23	10	14,3	20	-	21
180 311 00	1F	11	17,28	17,79	23	10	14,3	20	-	23
180 312 00	1F	12	18,90	19,40	25	10	14,3	20	-	29
180 313 00	1F	13	20,51	21,02	25	10	14,3	20	-	36
180 314 00	1F	14	22,13	22,64	28	16	14,3	20	-	42
180 315 00	1F	15	23,75	24,26	28	16	14,3	20	-	50
180 316 00	1F	16	25,36	25,87	32	16	14,3	20	-	58
180 317 00	1F	17	26,98	27,49	32	20	14,3	20	-	71
180 318 00	1F	18	28,60	29,11	36	20	14,3	20	-	84
180 319 00	1F	19	30,22	30,72	36	20	14,3	22	-	87
180 320 00	1F	20	31,83	32,34	38	25	14,3	22	-	111
180 321 00	1F	21	33,45	33,96	38	25	14,3	22	-	111
180 322 00	1F	22	35,07	35,57	42	25	14,3	22	-	129
180 324 00	1F	24	38,30	38,81	44	30	14,3	22	-	161
180 326 00	1F	26	41,53	42,04	48	30	14,3	22	8	180
180 327 00	1F	27	43,15	43,66	48	34	14,3	22	8	199
180 328 00	1F	28	44,77	45,28	51	34	14,3	22	8	217
180 330 00	1F	30	48,00	48,51	54	38	14,3	22	8	253
180 332 00	1F	32	51,24	51,74	57	38	14,3	25	8	307
180 334 00	1F	34	54,47	54,98	60	38	14,3	25	8	339
180 335 00	1F	35	56,09	56,60	63	38	14,3	25	8	350
180 336 00	2	36	57,70	58,21	-	45	14,3	25	8	142
180 338 00	2	38	60,94	61,45	-	45	14,3	25	8	157
180 340 00	2	40	64,17	64,68	-	45	14,3	25	8	165
180 342 00	2	42	67,41	67,91	-	45	14,3	25	8	178
180 344 00	2	44	70,64	71,15	-	45	14,3	25	8	193
180 348 00	3	48	77,11	77,62	-	45	14,3	25	10	180
180 360 00	3	60	96,51	97,02	-	45	14,3	25	10	213
180 372 00	3	72	115,92	116,42	-	45	14,3	25	10	274

* Up to a Teeth Number of 24 only centre hole.

Pitch L = 3/8" (9.525 mm) for Timing Belt Width 050 = 12.7 mm

Product No.	Type	Number of teeth	D_e mm	d_0 mm	D_f mm	ND mm	b mm	L mm	B mm	Weight kg
182 110 00	1F	10	29,56	30,33	36	20	19	28	8	0,11
182 111 00	1F	11	32,59	33,35	36	24	19	30	8	0,13
182 112 00	1F	12	35,62	36,38	42	24	19	30	8	0,17
182 113 00	1F	13	38,65	39,41	44	28	19	30	8	0,20
182 114 00	1F	14	41,68	42,45	48	28	19	30	8	0,23
182 115 00	1F	15	44,72	45,48	51	34	19	30	8	0,29
182 116 00	1F	16	47,75	48,51	54	36	19	32	8	0,34
182 117 00	1F	17	50,78	51,54	57	36	19	32	10	0,37
182 118 00	1F	18	53,81	54,57	60	40	19	32	10	0,43
182 119 00	1F	19	56,84	57,61	63	40	19	32	10	0,47
182 120 00	1F	20	59,88	60,64	66	40	19	32	10	0,51
182 121 00	1F	21	62,91	63,67	71	45	19	32	10	0,58
182 122 00	1F	22	65,94	66,70	75	45	19	32	10	0,64
182 123 00	1F	23	68,97	69,73	79	55	19	32	10	0,76
182 124 00	1F	24	72,00	72,77	79	55	19	32	10	0,80
182 125 00	1F	25	75,04	75,80	83	58	19	32	10	0,88
182 126 00	1F	26	78,07	78,83	87	58	19	32	12	0,93
182 127 00	1F	27	81,10	81,86	87	58	19	32	12	0,98
182 128 00	1F	28	84,13	84,89	91	58	19	32	12	1,04
182 130 00	1F	30	90,20	90,96	97	70	19	32	12	1,28
182 132 00	1F	32	96,26	97,02	103	70	19	32	12	1,40
182 133 00	1F	33	99,29	100,05	106	70	19	32	12	1,48
182 134 00	1F	34	102,32	103,08	111	70	19	32	12	1,56
182 135 00	1F	35	105,35	106,12	111	70	19	32	12	1,61
182 136 00	1F	36	108,39	109,15	115	70	19	32	12	1,69
182 140 00	1F	40	120,51	121,28	127	70	19	32	12	2,03
182 144 00	1F	44	132,64	133,40	140	70	19	32	12	2,40
182 148 00	1F	48	144,77	145,53	152	70	19	32	12	2,76
182 150 00	4	50	150,83	151,60	-	70	19	32	14	1,59
182 156 00	4	56	169,02	169,79	-	70	19	32	14	1,71
182 160 00	4	60	181,15	181,91	-	75	19	42	14	2,21
182 172 00	4	72	217,53	218,30	-	75	19	42	14	2,77
182 184 00	4	84	253,92	254,66	-	75	19	42	14	2,96
182 187 00	4	96	290,30	291,06	-	75	19	42	14	3,27



Reworking within 24h-service possible. Custom made parts on request.

Standard Pulleys, Inch Pitch DIN 5294

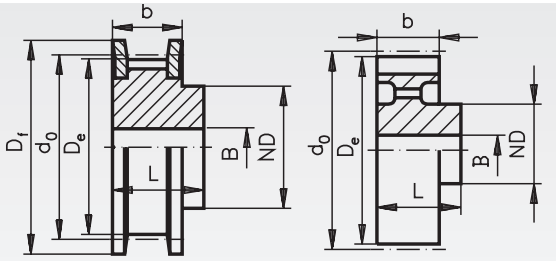



Material: Up to a Teeth Number of 48 phosphated steel, from a Teeth Number of 50 grey cast iron GG20. Pre-bored.

Ordering Details: e.g.: Product No. 182 210 00, Pulleys, Pitch L = 3/8", 10 Teeth, Timing Belt Width 075, 2 Flanges

Pitch L = 3/8" (9.525 mm) for Timing Belt Width 075 = 19.1 mm

Product No.	Type	Number of teeth	D_e mm	d_0 mm	D_f mm	ND mm	b mm	L mm	B mm	Weight kg
182 210 00	1F	10	29,56	30,33	36	20	25,4	38	8	0,14
182 211 00	1F	11	32,59	33,35	38	24	25,4	38	8	0,17
182 212 00	1F	12	35,62	36,38	42	24	25,4	38	8	0,21
182 213 00	1F	13	38,65	39,41	44	28	25,4	38	8	0,26
182 214 00	1F	14	41,68	42,45	48	28	25,4	38	8	0,28
182 215 00	1F	15	44,72	45,48	51	34	25,4	38	8	0,35
182 216 00	1F	16	47,75	48,51	54	36	25,4	38	8	0,40
182 217 00	1F	17	50,78	51,54	57	36	25,4	38	10	0,45
182 218 00	1F	18	53,81	54,57	60	40	25,4	38	10	0,52
182 219 00	1F	19	56,84	57,61	63	40	25,4	38	10	0,58
182 220 00	1F	20	59,88	60,64	66	40	25,4	38	10	0,63
182 221 00	1F	21	62,91	63,67	71	45	25,4	38	10	0,70
182 222 00	1F	22	65,94	66,70	75	45	25,4	38	10	0,78
182 223 00	1F	23	68,97	69,73	79	55	25,4	38	10	0,92
182 224 00	1F	24	72,00	72,77	79	55	25,4	38	10	0,98
182 225 00	1F	25	75,04	75,80	83	58	25,4	38	10	1,07
182 226 00	1F	26	78,07	78,83	87	58	25,4	38	12	1,15
182 227 00	1F	27	81,10	81,86	87	58	25,4	38	12	1,29
182 228 00	1F	28	84,13	84,89	91	58	25,4	38	12	1,43
182 230 00	1F	30	90,20	90,96	97	70	25,4	38	12	1,57
182 232 00	1F	32	96,26	97,02	103	70	25,4	38	12	1,73
182 233 00	1F	33	99,29	100,05	106	70	25,4	38	12	1,84
182 234 00	1F	34	102,32	103,08	111	70	25,4	38	12	1,94
182 235 00	1F	35	105,35	106,12	111	70	25,4	38	12	2,02
182 236 00	1F	36	108,39	109,15	115	70	25,4	38	12	2,12
182 240 00	1F	40	120,51	121,28	127	70	25,4	38	12	2,55
182 244 00	1F	44	132,64	133,40	140	70	25,4	38	12	3,04
182 248 00	1F	48	144,77	145,53	152	70	25,4	38	12	3,54
182 250 00	4	50	150,83	151,60	-	70	25,4	38	14	1,91
182 256 00	4	56	169,02	169,79	-	70	25,4	38	14	2,11
182 260 00	4	60	181,15	181,81	-	75	25,4	45	14	2,59
182 272 00	4	72	217,53	218,30	-	75	25,4	45	14	2,86
182 284 00	4	84	253,92	254,66	-	75	25,4	45	14	3,79
182 287 00	4	96	290,30	291,06	-	75	25,4	45	14	3,76

Pitch L = 3/8" (9.525 mm) for Timing Belt Width 100 = 25.4 mm

Product No.	Type	Number of teeth	D_e mm	d_0 mm	D_f mm	ND mm	b mm	L mm	B mm	Weight kg
182 310 00	1F	10	29,56	30,33	36,0	20	31,8	45	8	0,17
182 311 00	1F	11	32,59	33,35	38,0	24	31,8	45	8	0,20
182 312 00	1F	12	35,62	36,37	42,0	24	31,8	45	8	0,26
182 313 00	1F	13	38,65	39,41	44,0	28	31,8	45	8	0,31
182 314 00	1F	14	41,68	42,44	48,0	28	31,8	45	10	0,36
182 315 00	1F	15	44,72	45,48	51,0	34	31,8	45	10	0,44
182 316 00	1F	16	47,75	48,51	54,0	36	31,8	45	10	0,48
182 317 00	1F	17	50,78	51,54	57,0	36	31,8	45	10	0,55
182 318 00	1F	18	53,81	54,59	60,0	40	31,8	45	10	0,62
182 319 00	1F	19	56,84	57,61	63,0	40	31,8	45	10	0,69
182 320 00	1F	20	59,88	60,63	66,0	40	31,8	45	10	0,76
182 321 00	1F	21	62,91	63,68	71,0	45	31,8	45	10	0,86
182 322 00	1F	22	65,94	66,70	75,0	45	31,8	45	12	0,94
182 323 00	1F	23	68,97	69,73	79,0	55	31,8	45	12	1,11
182 324 00	1F	24	72,00	72,77	79,0	55	31,8	45	12	1,17
182 325 00	1F	25	75,04	75,80	83,0	58	31,8	45	12	1,29
182 326 00	1F	26	78,07	78,84	87,0	58	31,8	45	12	1,38
182 327 00	1F	27	81,10	81,86	87,0	58	31,8	45	12	1,46
182 328 00	1F	28	84,13	84,89	91,0	58	31,8	45	12	1,56
182 330 00	1F	30	90,20	90,96	97,0	70	31,8	45	12	1,89
182 332 00	1F	32	96,26	97,03	103,0	70	31,8	45	12	2,10
182 333 00	1F	33	99,29	100,05	106,0	70	31,8	45	12	2,21
182 334 00	1F	34	102,32	103,08	111,0	70	31,8	45	12	2,35
182 335 00	1F	35	105,35	106,12	111,0	70	31,8	45	12	2,44
182 336 00	1F	36	108,39	109,14	115,0	70	31,8	45	12	2,58
182 340 00	1F	40	120,51	121,29	127,0	70	31,8	45	12	3,12
182 344 00	1F	44	132,64	133,40	140,0	70	31,8	45	12	3,76
182 348 00	1F	48	144,77	145,54	152,0	70	31,8	45	12	4,33
182 350 00	4	50	150,83	151,60	-	70	31,8	45	14	2,21
182 356 00	4	56	169,02	169,79	-	70	31,8	45	14	2,44
182 360 00	4	60	181,15	181,92	-	75	31,8	45	14	2,79
182 372 00	4	72	217,53	218,29	-	75	31,8	45	14	3,16
182 384 00	4	84	253,92	254,69	-	75	31,8	45	14	3,73
182 387 00	4	96	290,30	291,06	-	75	31,8	45	14	4,25



Reworking within 24h-service possible. Custom made parts on request.

Standard Pulleys, Inch Pitch DIN 5294

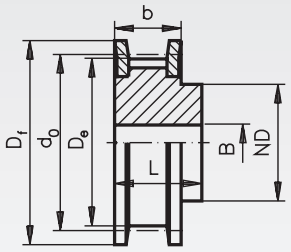

Type 1F

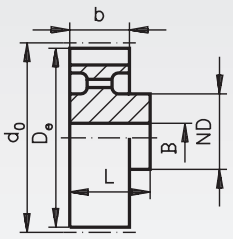

Type 4

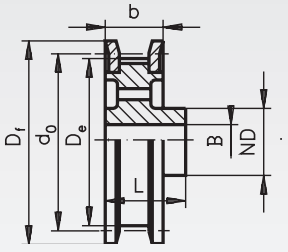

Type 5F



Material: Up to a Teeth Number of 40 phosphated steel, from a Teeth Number of 44 grey cast iron GG20. Pre-bored.

Ordering Details: e.g.: Product No. 184 014 00, Pulleys, Pitch H = 1/2", 14 Teeth, Timing Belt Width 075, 2 Flanges

Pitch H = 1/2" (12.7 mm) for Timing Belt Width 075 = 19.1 mm

Product No.	Type	Number of teeth	D_e mm	d_0 mm	D_f mm	ND mm	b mm	L mm	B mm	Weight kg
184 014 00	1F	14	55,22	56,60	63	40	26,4	40	10	0,60
184 015 00	1F	15	59,27	60,64	66	45	26,4	40	10	0,70
184 016 00	1F	16	63,31	64,68	71	45	26,4	40	10	0,77
184 017 00	1F	17	67,35	68,72	75	45	26,4	40	12	0,83
184 018 00	1F	18	71,39	72,77	79	55	26,4	40	12	1,03
184 019 00	1F	19	75,44	76,81	83	60	26,4	40	12	1,14
184 020 00	1F	20	79,48	80,85	87	62	26,4	40	12	1,27
184 021 00	1F	21	83,52	84,89	91	65	26,4	40	12	1,41
184 022 00	1F	22	87,56	88,94	93	68	26,4	40	12	1,54
184 023 00	1F	23	91,61	92,98	97	72	26,4	40	12	1,63
184 024 00	1F	24	95,65	97,02	103	72	26,4	40	12	1,82
184 025 00	1F	25	99,69	101,06	106	72	26,4	40	12	1,95
184 026 00	1F	26	103,73	105,11	111	80	26,4	40	12	2,19
184 027 00	1F	27	107,78	109,15	115	80	26,4	40	12	2,33
184 028 00	1F	28	111,82	113,19	119	80	26,4	40	12	2,47
184 030 00	1F	30	119,90	121,28	127	80	26,4	40	14	2,81
184 032 00	1F	32	127,99	129,36	135	80	26,4	40	14	3,08
184 033 00	1F	33	132,03	133,40	140	80	26,4	40	14	3,25
184 034 00	1F	34	136,07	137,45	143	80	26,4	40	14	3,41
184 035 00	1F	35	140,12	141,49	148	80	26,4	40	14	3,62
184 036 00	1F	36	144,16	145,53	152	80	26,4	40	14	3,04
184 038 00	1F	38	152,24	153,62	158	80	26,4	40	14	4,20
184 040 00	1F	40	160,33	161,70	168	80	26,4	40	14	4,58
184 044 00	5F	44	176,50	177,87	184	80	26,4	40	18	2,53
184 048 00	5F	48	192,67	194,04	200	90	26,4	45	18	3,34
184 050 00	4	50	200,75	202,13	-	90	26,4	45	18	3,34

Pitch H = 1/2" (12.7 mm) for Timing Belt Width 100 = 25.4 mm

Product No.	Type	Number of teeth	D_e mm	d_0 mm	D_f mm	ND mm	b mm	L mm	B mm	Weight kg
184 114 00	1F	14	55,22	56,60	63	40	31,8	45	12	0,68
184 115 00	1F	15	59,27	60,64	66	45	31,8	45	12	0,77
184 116 00	1F	16	63,31	64,68	71	45	31,8	45	12	0,89
184 117 00	1F	17	67,35	68,72	75	45	31,8	45	12	0,96
184 118 00	1F	18	71,39	72,77	79	55	31,8	45	12	1,18
184 119 00	1F	19	75,44	76,81	83	60	31,8	45	14	1,28
184 120 00	1F	20	79,48	80,85	87	62	31,8	45	14	1,43
184 121 00	1F	21	83,52	84,89	91	65	31,8	45	14	1,58
184 122 00	1F	22	87,56	88,94	93	68	31,8	45	14	1,74
184 123 00	1F	23	91,61	92,98	97	72	31,8	45	14	1,92
184 124 00	1F	24	95,65	97,02	103	72	31,8	45	14	2,07
184 125 00	1F	25	99,69	101,06	106	72	31,8	45	14	2,22
184 126 00	1F	26	103,73	105,11	111	80	31,8	45	14	2,48
184 127 00	1F	27	107,78	109,15	115	80	31,8	45	14	2,65
184 128 00	1F	28	111,82	113,19	119	80	31,8	45	14	2,82
184 130 00	1F	30	119,90	121,28	127	80	31,8	45	14	3,18
184 132 00	1F	32	127,99	129,36	135	80	31,8	45	14	3,55
184 133 00	1F	33	132,03	133,40	140	80	31,8	45	14	3,79
184 134 00	1F	34	136,07	137,45	143	80	31,8	45	14	4,01
184 135 00	1F	35	140,12	141,49	148	80	31,8	45	14	4,22
184 136 00	1F	36	144,16	145,53	152	80	31,8	45	14	4,38
184 138 00	1F	38	152,24	153,62	158	80	31,8	45	14	5,01
184 140 00	1F	40	160,33	161,70	168	80	31,8	45	14	5,38
184 144 00	5F	44	176,50	177,87	184	80	31,8	50	18	3,79
184 148 00	5F	48	192,67	194,04	200	90	31,8	50	18	4,46
184 150 00	4	50	200,75	202,13	-	90	31,8	50	18	3,80
184 158 00	4	58	233,09	234,47	-	90	31,8	50	18	4,27
184 160 00	4	60	241,18	242,55	-	120	31,8	50	18	6,37
184 172 00	4	72	289,69	291,06	-	120	31,8	55	18	7,33
184 184 00	4	84	338,20	339,57	-	120	31,8	55	18	8,33



Reworking within 24h-service possible. Custom made parts on request.

Standard Pulleys, Inch Pitch DIN 5294

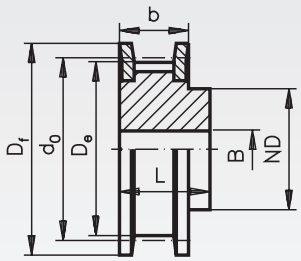

Type 1F



Material: Up to a Teeth Number of 40 phosphated steel, from a Teeth Number of 44 grey cast iron GG20 (on request). Pre-bored.

Ordering Details: e.g.: Product No. 184 214 00, Pulleys, Pitch H = 1/2", 14 Teeth, Timing Belt Width 150, 2 Flanges

Pitch H = 1/2" (12.7 mm) for Timing Belt Width 150 = 38.1 mm

Product No.	Type	Number of teeth	D_e mm	d_0 mm	D_f mm	ND mm	b mm	L mm	B mm	Weight kg
184 214 00	1F	14	55,22	56,60	63	40	46	58	18	0,922
184 215 00	1F	15	59,27	60,64	66	45	46	58	18	1,076
184 216 00	1F	16	63,31	64,68	71	45	46	58	18	1,203
184 217 00	1F	17	67,35	68,72	75	45	46	58	18	1,242
184 218 00	1F	18	71,39	72,77	79	55	46	58	18	1,575
184 219 00	1F	19	75,44	76,81	83	60	46	58	18	1,771
184 220 00	1F	20	79,48	80,85	87	62	46	58	18	1,973
184 221 00	1F	21	83,52	84,89	91	65	46	58	18	2,083
184 222 00	1F	22	87,56	88,94	93	68	46	58	18	2,387
184 223 00	1F	23	91,61	92,98	97	72	46	58	18	2,504
184 224 00	1F	24	95,65	97,02	103	72	46	58	18	2,726
184 225 00	1F	25	99,69	101,06	106	72	46	58	18	3,046
184 226 00	1F	26	103,73	105,11	111	80	46	58	18	3,254
184 227 00	1F	27	107,78	109,15	115	80	46	58	18	3,861
184 228 00	1F	28	111,82	113,19	119	80	46	58	18	3,866
184 230 00	1F	30	119,90	121,28	127	80	46	58	18	4,373
184 232 00	1F	32	127,99	129,36	135	80	46	58	18	4,932
184 233 00	1F	33	132,03	133,40	140	80	46	58	18	5,138
184 234 00	1F	34	136,07	137,45	143	80	46	58	18	5,394
184 235 00	1F	35	140,12	141,49	148	80	46	58	18	5,732
184 236 00	1F	36	144,16	145,53	152	80	46	58	18	6,158
184 238 00	1F	38	152,24	153,62	158	80	46	58	18	6,825
184 240 00	1F	40	160,33	161,70	168	80	46	58	18	7,438

Pitch H = 1/2" (12.7 mm) for Timing Belt Width 200 = 50.8 mm

Product No.	Type	Number of teeth	D_e mm	d_0 mm	D_f mm	ND mm	b mm	L mm	B mm	Weight kg
184 314 00	1F	14	55,22	56,60	63	40	58,7	70	18	1,140
184 315 00	1F	15	59,27	60,64	66	45	58,7	70	18	1,160
184 316 00	1F	16	63,31	64,68	71	45	58,7	70	18	1,487
184 317 00	1F	17	67,35	68,72	75	45	58,7	70	18	1,536
184 318 00	1F	18	71,39	72,77	79	55	58,7	70	18	1,931
184 319 00	1F	19	75,44	76,81	83	60	58,7	70	18	2,047
184 320 00	1F	20	79,48	80,85	87	62	58,7	70	18	2,421
184 321 00	1F	21	83,52	84,89	91	65	58,7	70	18	2,668
184 322 00	1F	22	87,56	88,94	93	68	58,7	70	18	2,944
184 323 00	1F	23	91,61	92,98	97	72	58,7	70	18	3,231
184 324 00	1F	24	95,65	97,02	103	72	58,7	70	18	3,490
184 325 00	1F	25	99,69	101,06	106	72	58,7	70	18	3,763
184 326 00	1F	26	103,73	105,11	111	80	58,7	70	18	4,151
184 327 00	1F	27	107,78	109,15	115	80	58,7	70	18	4,443
184 328 00	1F	28	111,82	113,19	119	80	58,7	70	18	4,773
184 330 00	1F	30	119,90	121,28	127	80	58,7	70	18	5,338
184 332 00	1F	32	127,99	129,36	135	80	58,7	70	18	6,157
184 333 00	1F	33	132,03	133,40	140	80	58,7	70	18	6,450
184 334 00	1F	34	136,07	137,45	143	80	58,7	70	18	6,731
184 335 00	1F	35	140,12	141,49	148	80	58,7	70	18	7,332
184 336 00	1F	36	144,16	145,53	152	80	58,7	70	18	7,736
184 338 00	1F	38	152,24	153,62	158	80	58,7	70	18	8,648
184 340 00	1F	40	160,33	161,70	168	80	58,7	70	18	9,455



Reworking within 24h-service possible. Custom made parts on request.

Splined Shafts For Timing Belts Profile T

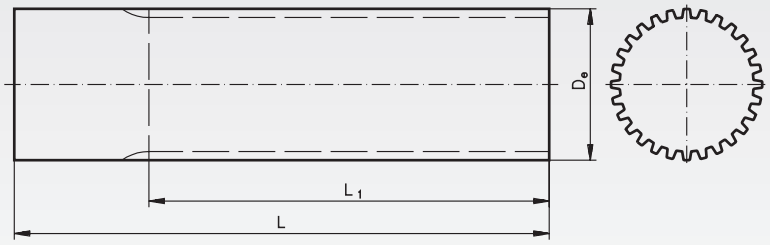



Material: Aluminium UNI 9006-T6.

Ordering Details: e.g.: Product No. 160 910 10, Splined Shafts T 2.5, No. of Teeth 10

Profile T 2.5

Product No.	Number of teeth	D_e mm	L_1 mm	L mm	Weight kg
160 910 00	10	7,42	50	75	0,01
160 912 00	12	9,00	50	75	0,01
160 913 00	13	9,80	50	75	0,02
160 914 00	14	10,60	50	75	0,02
160 915 00	15	11,40	75	75	0,02
160 916 00	16	12,20	75	75	0,02
160 917 00	17	13,00	75	75	0,03
160 918 00	18	13,80	75	75	0,03
160 919 00	19	14,60	120	120	0,05
160 920 00	20	15,40	120	120	0,05
160 921 00	21	16,20	120	120	0,06
160 922 00	22	17,00	140	140	0,08
160 924 00	24	18,55	140	140	0,09
160 926 00	26	20,15	140	140	0,12
160 927 00	27	20,95	140	140	0,13
160 928 00	28	21,75	140	140	0,14
160 929 00	29	22,55	140	140	0,15
160 930 00	30	23,35	140	140	0,15
160 932 00	32	24,95	140	140	0,18
160 934 00	34	26,55	140	140	0,21
160 935 00	35	27,35	140	140	0,21
160 936 00	36	28,10	140	140	0,22
160 938 00	38	29,70	140	140	0,26
160 940 00	40	31,30	140	140	0,27
160 942 00	42	32,90	140	140	0,32
160 944 00	44	34,50	140	140	0,33
160 945 00	45	35,30	140	140	0,37
160 948 00	48	37,70	140	140	0,40
160 950 00	50	39,29	160	160	0,52
160 960 00	60	47,25	160	160	0,72
160 965 00	65	51,20	160	160	0,87
160 970 00	70	55,20	160	160	1,05
160 972 00	72	56,80	160	160	1,11
160 990 00	90	71,12	160	160	1,75
160 999 00	100	79,08	160	160	2,18

Profile T 5

Product No.	Number of teeth	D_e mm	L_1 mm	L mm	Weight kg
162 910 00	10	15,05	140	140	0,06
162 911 00	11	16,65	140	140	0,07
162 912 00	12	18,25	140	140	0,09
162 913 00	13	19,85	140	140	0,10
162 914 00	14	21,45	140	140	0,12
162 915 00	15	23,05	140	140	0,14
162 916 00	16	24,60	140	140	0,16
162 917 00	17	26,20	140	140	0,19
162 918 00	18	27,80	140	140	0,21
162 919 00	19	29,40	140	140	0,24
162 920 00	20	31,00	160	160	0,31
162 921 00	21	32,70	160	160	0,33
162 922 00	22	34,25	160	160	0,36
162 923 00	23	35,85	160	160	0,39
162 924 00	24	37,40	160	160	0,43
162 925 00	25	38,95	160	160	0,47
162 926 00	26	40,60	160	160	0,51
162 927 00	27	42,20	160	160	0,55
162 928 00	28	43,75	160	160	0,60
162 929 00	29	45,35	160	160	0,65
162 930 00	30	46,95	160	160	0,70
162 932 00	32	50,10	160	160	0,80
162 934 00	34	53,25	160	160	0,91
162 935 00	35	54,85	160	160	0,98
162 936 00	36	56,45	160	160	1,02
162 937 00	37	58,06	160	160	1,08
162 938 00	38	59,65	160	160	1,14
162 940 00	40	62,85	160	160	1,27
162 942 00	42	66,00	160	160	1,41
162 944 00	44	69,20	160	160	1,55
162 945 00	45	70,80	160	160	1,63
162 946 00	46	72,40	160	160	1,69
162 948 00	48	75,55	160	160	1,85
162 950 00	50	78,75	160	160	2,02
162 960 00	60	94,65	160	160	2,95
162 972 00	72	113,75	160	160	4,28
162 980 00	80	126,48	160	160	5,39
162 990 00	90	142,40	160	160	6,76
162 999 00	100	158,31	160	160	8,34

Profile T 10

Product No.	Number of teeth	D_e mm	L_1 mm	L mm	Weight kg
164 910 00	10	29,98	140	140	0,22
164 911 00	11	33,16	140	140	0,29
164 912 00	12	36,35	140	140	0,34
164 913 00	13	39,55	140	140	0,42
164 914 00	14	42,70	160	160	0,55
164 915 00	15	45,90	160	160	0,64
164 916 00	16	49,10	160	160	0,74
164 917 00	17	52,25	160	160	0,85
164 918 00	18	55,45	160	160	0,96
164 919 00	19	58,65	160	160	1,07
164 920 00	20	61,80	160	160	1,20
164 921 00	21	65,00	160	160	1,29
164 922 00	22	68,20	160	160	1,43
164 923 00	23	71,35	160	160	1,58
164 924 00	24	74,55	160	160	1,73
164 926 00	26	80,90	160	160	2,05
164 928 00	28	87,25	160	160	2,39
164 930 00	30	93,65	160	160	2,76
164 932 00	32	100,00	160	160	3,18
164 934 00	34	106,40	160	160	3,61
164 936 00	36	112,75	160	160	4,06
164 938 00	38	119,10	160	160	4,62
164 940 00	40	125,45	160	160	5,13
164 945 00	45	141,40	160	160	6,50
164 948 00	48	150,95	160	160	7,39
164 960 00	60	189,15	160	160	11,76
164 972 00	72	227,29	160	160	17,03



Flanges page 170



Reworking within 24h-service possible. Custom made parts on request.

Splined Shafts For Timing Belts Profile AT

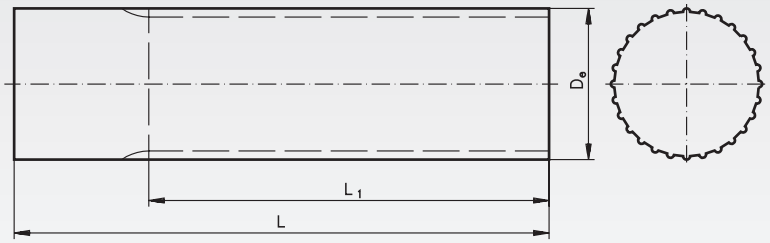

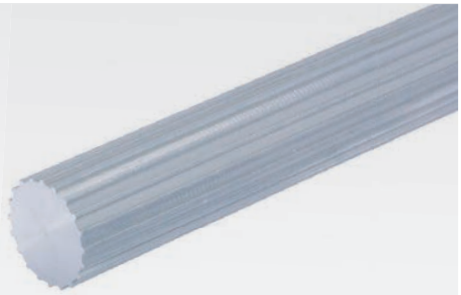

Material: Aluminium UNI 9006-T6.

Ordering Details: e.g.: Product No. 166 912 00, Splined Shafts AT5, No. of Teeth 12

Profile AT 5

Product No.	Number of teeth	D_e mm	L_1 mm	L mm	Weight kg
166 912 00	12	17,85	140	140	0,08
166 913 00	13	19,45	140	140	0,10
166 914 00	14	21,05	140	140	0,12
166 915 00	15	22,65	140	140	0,14
166 916 00	16	24,20	140	140	0,15
166 917 00	17	25,80	140	140	0,18
166 918 00	18	27,40	140	140	0,20
166 919 00	19	29,00	140	140	0,23
166 920 00	20	30,60	160	160	0,30
166 921 00	21	32,30	160	160	0,33
166 922 00	22	33,85	160	160	0,36
166 923 00	23	35,45	160	160	0,40
166 924 00	24	37,00	160	160	0,44
166 925 00	25	38,55	160	160	0,47
166 926 00	26	40,20	160	160	0,51
166 927 00	27	41,80	160	160	0,55
166 928 00	28	43,35	160	160	0,60
166 930 00	30	46,55	160	160	0,69
166 932 00	32	49,70	160	160	0,81
166 934 00	34	52,85	160	160	0,90
166 936 00	36	56,05	160	160	1,02
166 938 00	38	59,25	160	160	1,14
166 940 00	40	62,45	160	160	1,28
166 942 00	42	65,60	160	160	1,41
166 944 00	44	68,80	160	160	1,55
166 948 00	48	75,15	160	160	1,85
166 952 00	52	81,55	160	160	2,19
166 956 00	56	87,90	160	160	2,55
166 958 00	58	91,10	160	160	2,74
166 960 00	60	94,25	160	160	2,94
166 964 00	64	100,65	160	160	3,36
166 972 00	72	113,35	160	160	4,29

Profile AT 10

Product No.	Number of teeth	D_e mm	L_1 mm	L mm	Weight kg
168 915 00	15	45,90	160	160	0,62
168 916 00	16	49,10	160	160	0,72
168 917 00	17	52,25	160	160	0,82
168 918 00	18	55,45	160	160	0,94
168 919 00	19	58,65	160	160	1,05
168 920 00	20	61,80	160	160	1,17
168 921 00	21	65,00	160	160	1,31
168 922 00	22	68,20	160	160	1,44
168 923 00	23	71,35	160	160	1,60
168 924 00	24	74,55	160	160	1,75
168 925 00	25	77,75	160	160	1,91
168 926 00	26	80,90	160	160	2,06
168 927 00	27	84,05	160	160	2,23
168 928 00	28	87,25	160	160	2,42
168 930 00	30	93,65	160	160	2,79
168 932 00	32	100,00	160	160	3,20
168 934 00	34	106,40	160	160	3,65
168 936 00	36	112,75	160	160	4,09
168 938 00	38	119,10	160	160	4,59
168 940 00	40	125,45	160	160	5,16
168 942 00	42	131,85	160	160	5,65
168 944 00	44	138,20	160	160	6,22
168 948 00	48	150,95	160	160	7,45
168 952 00	52	163,65	160	160	8,93
168 956 00	56	176,40	160	160	10,39
168 960 00	60	189,15	160	160	11,78
168 970 00	70	220,95	160	160	16,18



Reworking within 24h-service possible. Custom made parts on request.

Splined Shafts For Timing Belts Profile HTD

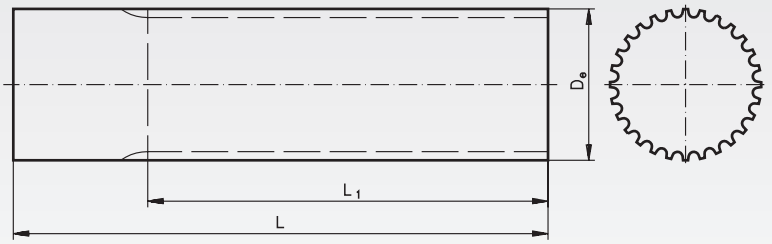

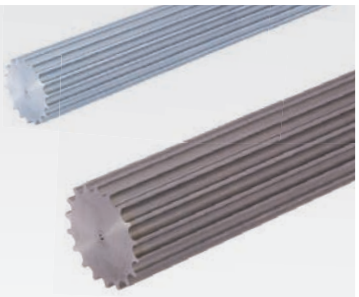

Material: HTD 3M and 5M: Aluminium 9006-T6.
HTD 8M: Steel.

Ordering Details: e.g.: Product No. 170 909 00, Splined Shafts HTD 3M, No. of Teeth 9

Profile 3M

Product No.	Number of teeth	D_e mm	L_1 mm	L mm	Weigth kg
170 909 00	9	7,83	75	100	0,01
170 910 00	10	8,79	75	100	0,02
170 911 00	11	9,74	75	100	0,02
170 912 00	12	10,70	100	125	0,03
170 913 00	13	11,65	100	125	0,03
170 914 00	14	12,61	100	125	0,04
170 915 00	15	13,56	100	125	0,04
170 916 00	16	14,52	125	155	0,06
170 917 00	17	15,47	125	155	0,07
170 918 00	18	16,43	125	155	0,08
170 919 00	19	17,38	125	155	0,09
170 920 00	20	18,34	150	165	0,11
170 921 00	21	19,25	150	165	0,12
170 922 00	22	20,25	150	165	0,13
170 923 00	23	21,20	150	165	0,15
170 924 00	24	22,16	150	165	0,16
170 925 00	25	23,11	150	165	0,17
170 926 00	26	24,07	150	165	0,19
170 927 00	27	25,02	150	165	0,21
170 928 00	28	25,98	150	165	0,22
170 929 00	29	26,93	150	165	0,24
170 930 00	30	27,89	175	183	0,29
170 931 00	31	28,84	175	183	0,31
170 932 00	32	29,80	175	183	0,33
170 933 00	33	30,75	175	183	0,35
170 934 00	34	31,71	175	183	0,37
170 935 00	35	32,66	175	183	0,39
170 936 00	36	33,62	200	200	0,46
170 937 00	37	34,57	200	200	0,48
170 938 00	38	35,53	200	200	0,51
170 939 00	39	36,48	200	200	0,54
170 940 00	40	37,44	200	200	0,57
170 942 00	42	39,34	200	200	0,63
170 944 00	44	41,26	200	200	0,69
170 945 00	45	42,21	200	200	0,73
170 948 00	48	45,08	200	200	0,83
170 950 00	50	46,99	200	200	0,91
170 952 00	52	48,90	200	200	0,98
170 954 00	54	50,81	200	200	1,06
170 956 00	56	52,72	200	200	1,14
170 960 00	60	56,54	200	200	1,32
170 962 00	62	58,45	200	200	1,41
170 964 00	64	60,36	200	200	1,54
170 966 00	66	62,27	200	200	1,60
170 968 00	68	64,18	200	200	1,70
170 970 00	70	66,09	200	200	1,81
170 972 00	72	67,99	200	200	1,92

Profile 5M

Product No.	Number of teeth	D_e mm	L_1 mm	L mm	Weigth kg
172 912 00	12	17,96	160	160	0,08
172 913 00	13	19,55	160	160	0,10
172 914 00	14	21,14	175	200	0,16
172 915 00	15	22,73	175	200	0,19
172 916 00	16	24,32	175	200	0,21
172 917 00	17	25,92	175	200	0,24
172 918 00	18	27,51	200	200	0,27
172 919 00	19	29,10	200	200	0,31
172 920 00	20	30,69	200	200	0,35
172 921 00	21	32,28	200	200	0,39
172 922 00	22	33,87	200	200	0,43
172 923 00	23	35,47	200	200	0,48
172 924 00	24	37,06	200	200	0,52
172 925 00	25	38,85	200	200	0,57
172 926 00	26	40,24	200	200	0,62
172 927 00	27	41,83	200	200	0,67
172 928 00	28	43,42	200	200	0,73
172 930 00	30	46,61	200	200	0,84
172 932 00	32	49,79	200	200	0,97
172 934 00	34	52,97	200	200	1,11
172 936 00	36	56,16	200	200	1,25
172 938 00	38	59,34	200	200	1,40
172 940 00	40	62,52	200	200	1,55
172 942 00	42	65,71	200	200	1,73
172 944 00	44	68,89	200	200	1,90
172 945 00	45	70,48	200	200	1,99
172 948 00	48	75,25	200	200	2,27
172 950 00	50	78,44	200	200	2,48
172 960 00	60	94,35	200	200	3,60
172 972 00	72	113,45	200	200	5,28

Profile 8M

Product No.	Number of teeth	D_e mm	L_1 mm	L mm	Weigth kg
174 915 00	15	36,83	200	200	1,23
174 916 00	16	39,37	200	200	1,49
174 917 00	17	41,92	200	200	1,76
174 918 00	18	44,47	200	200	2,03
174 919 00	19	47,01	200	200	2,30
174 920 00	20	49,56	200	200	2,57
174 921 00	21	52,11	200	200	2,88
174 922 00	22	54,65	200	200	3,18
174 923 00	23	57,20	200	200	3,52
174 924 00	24	59,75	200	200	3,86
174 925 00	25	62,29	200	200	4,23
174 926 00	26	64,84	200	200	4,60
174 928 00	28	69,93	200	200	5,40
174 930 00	30	75,02	200	200	6,27
174 932 00	32	80,12	200	200	7,20
174 934 00	34	85,21	200	200	8,20
174 935 00	35	87,76	200	200	8,71
174 936 00	36	90,30	200	200	9,26
174 938 00	38	95,40	200	200	10,39
174 940 00	40	100,49	200	200	11,58
174 944 00	44	110,88	200	200	14,16
174 948 00	48	120,86	200	200	16,99



Flanges page 170



Reworking within 24h-service possible. Custom made parts on request.

Splined Shafts For Timing Belts, Inch Pitch

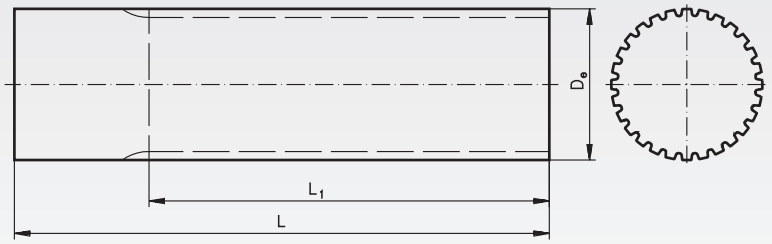



Material: Aluminium UNI 9006-T6.

Ordering Details: e.g.: Product No. 181 912 00, Splined Shafts MXL, No. of Teeth 12

Pitch MXL = 0.08“

Product No.	Number of teeth	D_e mm	L_1 mm	L mm	Weight kg
181 912 00	12	7,25	50	75	0,01
181 914 00	14	8,55	50	75	0,01
181 915 00	15	9,19	50	75	0,01
181 916 00	16	9,84	50	75	0,02
181 918 00	18	11,13	50	75	0,02
181 920 00	20	12,43	90	120	0,04
181 922 00	22	13,72	125	140	0,05
181 924 00	24	15,02	125	140	0,06
181 925 00	25	15,66	125	140	0,07
181 926 00	26	16,31	125	140	0,08
181 928 00	28	17,60	125	140	0,09
181 930 00	30	18,90	125	140	0,10
181 932 00	32	20,19	125	140	0,12
181 934 00	34	21,48	125	140	0,13
181 936 00	36	22,78	140	140	0,15
181 940 00	40	25,36	140	140	0,19
181 942 00	42	26,66	140	140	0,20
181 944 00	44	27,95	140	140	0,23
181 945 00	45	28,60	140	140	0,24
181 948 00	48	30,54	140	140	0,27
181 950 00	50	31,83	140	140	0,30
181 960 00	60	38,30	160	160	0,49
181 970 00	70	44,77	160	160	0,67
181 972 00	72	46,06	160	160	0,72

Pitch XL = 1/5“

Product No.	Number of teeth	D_e mm	L_1 mm	L mm	Weight kg
180 910 00	10	15,66	140	140	0,07
180 911 00	11	17,28	140	140	0,08
180 912 00	12	18,90	140	140	0,10
180 913 00	13	20,51	140	140	0,11
180 914 00	14	22,13	140	140	0,13
180 915 00	15	23,75	140	140	0,16
180 916 00	16	25,36	140	140	0,18
180 917 00	17	26,98	140	140	0,20
180 918 00	18	28,60	140	140	0,23
180 919 00	19	30,22	140	140	0,26
180 920 00	20	31,83	140	140	0,28
180 921 00	21	33,45	160	160	0,36
180 922 00	22	35,07	160	160	0,40
180 923 00	23	36,60	160	160	0,44
180 924 00	24	38,30	160	160	0,48
180 925 00	25	39,92	160	160	0,51
180 926 00	26	41,53	160	160	0,56
180 927 00	27	43,15	160	160	0,60
180 928 00	28	44,77	160	160	0,65
180 929 00	29	46,39	160	160	0,70
180 930 00	30	48,00	160	160	0,75
180 932 00	32	51,24	160	160	0,87
180 933 00	33	52,85	160	160	0,92
180 934 00	34	54,47	160	160	0,98
180 935 00	35	56,09	160	160	1,04
180 936 00	36	57,70	160	160	1,10
180 938 00	38	60,94	160	160	1,23
180 939 00	39	62,56	160	160	1,30
180 940 00	40	64,17	160	160	1,37
180 941 00	41	65,79	160	160	1,43
180 942 00	42	67,41	160	160	1,51
180 943 00	43	69,02	160	160	1,58
180 944 00	44	70,64	160	160	1,65
180 948 00	48	77,11	160	160	1,98
180 956 00	56	90,04	160	160	2,71
180 960 00	60	96,51	160	160	3,10
180 972 00	72	115,92	160	160	4,52

Pitch L = 3/8“

Product No.	Number of teeth	D_e mm	L_1 mm	L mm	Weight kg
182 910 00	10	29,56	140	140	0,23
182 911 00	11	32,59	140	140	0,28
182 912 00	12	35,62	160	160	0,39
182 913 00	13	38,65	160	160	0,46
182 914 00	14	41,68	160	160	0,55
182 915 00	15	44,72	160	160	0,63
182 916 00	16	47,75	160	160	0,73
182 917 00	17	50,78	160	160	0,82
182 918 00	18	53,81	160	160	0,93
182 919 00	19	56,84	160	160	1,04
182 920 00	20	59,88	160	160	1,16
182 921 00	21	62,91	160	160	1,28
182 922 00	22	65,94	160	160	1,41
182 923 00	23	68,98	160	160	1,55
182 924 00	24	72,00	160	160	1,69
182 927 00	27	81,10	160	160	2,15
182 930 00	30	90,20	160	160	2,67



Reworking within 24h-service possible. Custom made parts on request.

Flanges for Timing Belt Pulleys

Material: Steel, zinc-plated.

Flanges for timing belt pulleys, for custom-made parts or serial production. For economical reason, normally the flanges are mounted only at the smaller pulley. Often, the flanges get fixed by beading: On a turntable, with a rolling tool, hub material will get shaped over the flange. A beading material overhang of 0.5mm is recommended.

Sold by piece. Other sizes are available on request.

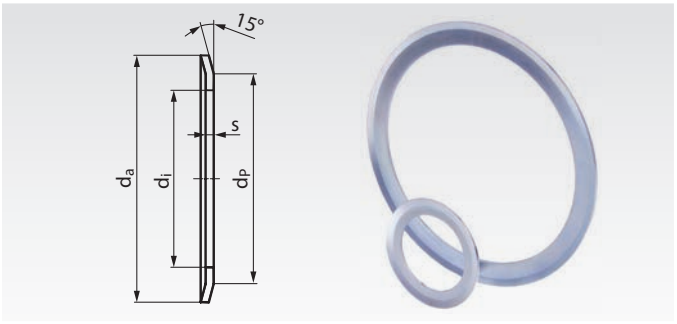

Ordering Details: e.g.: 2 Pieces Product No. 160 101 00, flange 0.5mm, Ø 13 x 10 x 6mm

Product No.	s mm	d_a mm	d_P mm	d_i mm	Weight g
160 101 00	0,5	13	10	6	1
160 101 01	0,5	15	12	8	1
160 101 02	0,5	16	13	9,5	1
160 101 04	0,5	18	15	11,5	1
160 101 05	0,5	19,5	17,5	12	1
160 101 06	0,5	23	17,5	12	1
160 101 07	0,5	23	20	14	1
160 101 08	0,5	25	22	15	1
160 101 09	0,5	28	24	18	1
160 101 10	0,5	32	28	21,5	1
160 101 11	0,5	36	31	25	2
160 101 12	0,5	38	34	28	3
160 101 13	0,5	42	38	30,5	3
160 101 14	0,5	48	43,5	37	3
160 102 00	1	19,5	17,5	12	1
160 102 01	1	23	17,5	12	1
160 102 02	1	23	20	14	2
160 102 03	1	25	22	15	3
160 102 04	1	28	24	18	3
160 102 05	1	32	28	21,5	3
160 102 06	1	36	31	25	4
160 102 07	1	38	34	28	4
160 102 08	1	42	38	30,5	5
160 102 09	1	44	40	33	5
160 102 10	1	48	43,5	37	6
160 102 11	1	51	47,5	40	7
160 102 12	1	54	50,5	43	7
160 102 13	1	57	53	46	7
160 102 14	1	60	57	47	10
160 102 15	1	63	57	48	10
160 102 16	1	66	61,5	52	10
160 102 17	1	71	65	56	12
160 102 18	1	75	68,5	60	13
160 102 19	1	83	76,5	68	14
160 102 20	1	87	82,5	72	15
160 102 21	1	91	85,5	76	16
160 102 22	1	93	89	80	14
160 102 23	1	97	93	83	15
160 102 24	1	106	101	90	20
160 102 25	1	119	113,5	103	22
160 102 26	1	131	125,5	115	25

Product No.	s mm	d_a mm	d_P mm	d_i mm	Weight g
160 103 00	1,5	36	31	25	6
160 103 01	1,5	38	34	28	6
160 103 02	1,5	42	38	30,5	8
160 103 03	1,5	44	40	33	8
160 103 04	1,5	48	43,5	37	9
160 103 05	1,5	51	47,5	40	10
160 103 06	1,5	54	50,5	43	10
160 103 07	1,5	57	53	46	11
160 103 08	1,5	60	57	47	13
160 103 09	1,5	63	57	48	16
160 103 10	1,5	66	61,5	52	16
160 103 11	1,5	71	65	56	18
160 103 12	1,5	75	68,5	60	20
160 103 13	1,5	79	73,5	64	20
160 103 14	1,5	83	76,5	68	21
160 103 15	1,5	87	82,5	72	22
160 103 16	1,5	91	85,5	76	21
160 103 17	1,5	93	89	80	21
160 103 18	1,5	97	93	83	24
160 103 19	1,5	98	92	79,3	32
160 103 20	1,5	103	97	86	30
160 103 21	1,5	106	101	90	30
160 103 22	1,5	111	106	94	30
160 103 23	1,5	115	110	99	32
160 103 25	1,5	119	113,5	103	33
160 103 26	1,5	123	117,5	107	33
160 103 27	1,5	127	122	111	36
160 103 28	1,5	135	130	119	37
160 103 30	1,5	140	134,5	123	42
160 103 31	1,5	143	139	127	42
160 103 33	1,5	148	143	132	42
160 103 34	1,5	152	147,5	136	44
160 103 35	1,5	158	154	142	44
160 103 38	1,5	168	163	149,5	45
160 103 39	1,5	184	179	165	62
160 103 40	1,5	192	187	173	64
160 103 42	1,5	200	195	181	67
160 104 00	2,5	127	120,2	104,7	82
160 104 01	2,5	138	130	108	110
160 104 02	2,5	146	138	116	120
160 104 03	2,5	154	146	122	132
160 104 04	2,5	160	150	128	139
160 104 05	2,5	168	162	135	152
160 104 06	2,5	183	170	145	199
160 104 07	2,5	188	180	158	159
160 104 09	2,5	198	188	165	157
160 104 10	2,5	200	192,8	172	154
160 104 11	2,5	211	198	173	218
160 104 12	2,5	226	214	190	227
160 104 14	2,5	240	224	192	317
160 104 15	2,5	256	240	220	258
160 104 16	2,5	256	247	225	230
160 104 18	2,5	296	287	252	370

Custom-made timing belt pulleys from our own production available at short time.

Fixing Plates for Timing Belts

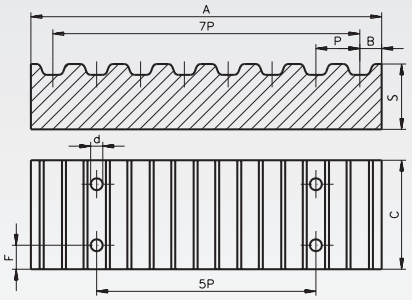

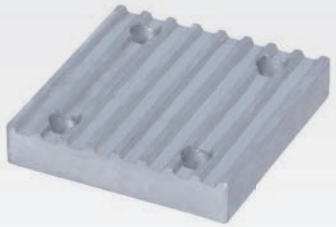

Material: Aluminium UNI 9006-T6.

Ordering Details: e.g.: Product No. 160 699 00, Fixing Plate, Pitch T2.5 Width 6 mm

The fixing plates are used to connect the belt ends. Practical examples see page 172.

T-Profile

Product No.	Profile	P mm	Belt Width mm	F mm	d mm	B mm	A mm	S mm	C mm	Weight g
160 699 00	T2,5	2,5	6	4	4,5	1,5	20,5	5	19	5
160 799 00	T2,5	2,5	10	4	4,5	1,5	20,5	5	24	6
162 699 00	T5	5	10	6	5,5	3,4	41,8	8	29	21
162 799 00	T5	5	16	6	5,5	3,4	41,8	8	35	27
162 899 00	T5	5	25	6	5,5	3,4	41,8	8	44	40
162 898 00	T5	5	32	6	5,5	3,4	41,8	8	51	58
162 899 01	T5	5	50	6	5,5	3,4	41,8	8	69	90
164 699 00	T10	10	16	8	9,0	5,0	80,0	15	41	112
164 799 00	T10	10	25	8	9,0	5,0	80,0	15	50	140
164 899 00	T10	10	32	8	9,0	5,0	80,0	15	57	160
164 999 00	T10	10	50	8	9,0	5,0	80,0	15	75	220
164 999 01	T10	10	100	8	9,0	5,0	80,0	15	125	360

AT-Profile

Product No.	Profile	P mm	Belt Width mm	F mm	d mm	B mm	A mm	S mm	C mm	Weight g
166 699 00	AT5	5	10	6	5,5	3,4	41,8	8	29	21
166 799 00	AT5	5	16	6	5,5	3,4	41,8	8	35	25
166 899 00	AT5	5	25	6	5,5	3,4	41,8	8	44	40
166 898 00	AT5	5	32	6	5,5	3,4	41,8	8	51	58
166 899 01	AT5	5	50	6	5,5	3,4	41,8	8	69	90
168 699 00	AT10	10	16	8	9,0	5,0	80,0	15	41	108
168 799 00	AT10	10	25	8	9,0	5,0	80,0	15	50	134
168 899 00	AT10	10	32	8	9,0	5,0	80,0	15	57	160
168 999 00	AT10	10	50	8	9,0	5,0	80,0	15	75	220
168 999 01	AT10	10	100	8	9,0	8,0	80,0	15	125	360

HTD-Profile

Product No.	Profile	P mm	Belt Width mm	F mm	d mm	B mm	A mm	S mm	C mm	Weight g
171 199 00	3M	3	9	4	4,5	2,0	25,0	6	24	8
171 399 00	3M	3	15	4	4,5	2,0	25,0	6	30	10
173 199 00	5M	5	10	6	5,5	3,4	41,8	8	28	17
173 399 00	5M	5	15	6	5,5	3,4	41,8	8	34	22
173 599 00	5M	5	25	6	5,5	3,4	41,8	8	44	30
175 199 00	8M	8	20	8	9,0	5,0	66,0	15	45	95
175 399 00	8M	8	30	8	9,0	5,0	66,0	15	55	120
175 599 00	8M	8	50	8	9,0	5,0	66,0	15	75	165
175 799 00	8M	8	85	8	9,0	5,0	66,0	15	110	250
177 661 99	14M	14	40	10	11,0	9,0	116,0	22	71	400
177 663 99	14M	14	55	10	11,0	9,0	116,0	22	86	500
177 665 99	14M	14	85	10	11,0	9,0	116,0	22	116	680
177 667 99	14M	14	115	10	11,0	9,0	116,0	22	146	850
177 669 99	14M	14	170	10	11,0	9,0	116,0	22	201	1200

Inch-Profile

Product No.	Profile	P	Belt Width		F	d	B	A	S	C	Weight
		mm	Inch	mm	mm	mm	mm	mm	mm	mm	g
180 699 00	XL	5,08	0,25	6,35	6	5,5	3,5	42,5	8	25,5	20
180 899 00	XL	5,08	0,37	9,53	6	5,5	3,5	42,5	8	28,5	23
182 699 00	L	9,525	0,50	12,7	8	9,0	5,0	76,6	15	39,0	108
182 799 00	L	9,525	0,75	19,1	8	9,0	5,0	76,6	15	45,0	125
182 899 00	L	9,525	1,00	25,4	8	9,0	5,0	76,6	15	51,5	143
184 599 00	H	12,7	0,75	19,1	10	11,0	9,0	106,9	22	51,0	295
184 699 00	H	12,7	1,00	25,4	10	11,0	9,0	106,9	22	57,5	330
184 799 00	H	12,7	1,50	38,1	10	11,0	9,0	106,9	22	70,0	385
184 899 00	H	12,7	2,00	50,8	10	11,0	9,0	106,9	22	83,0	456

Open-Length Timing Belt from Thermoplastic Polyurethane (TPU), weldable

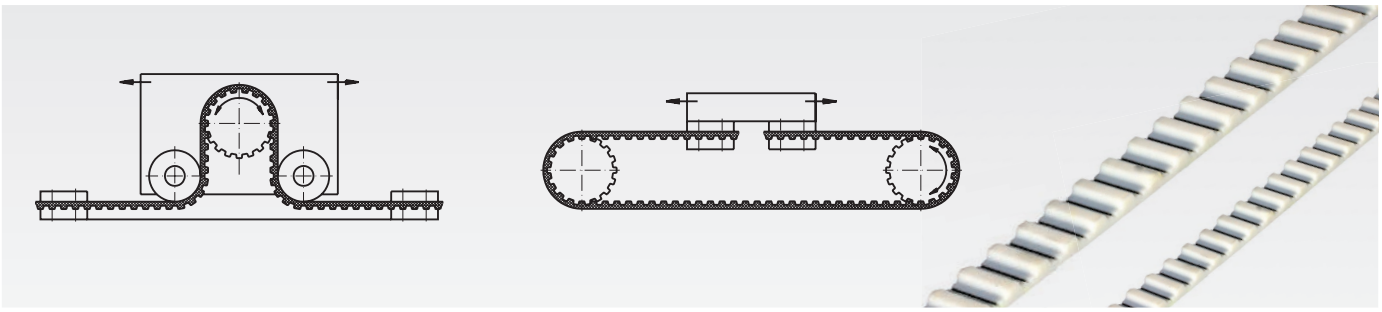

Material: Thermoplastic polyurethane (TPU), with steel tensile member. TPU belts can get welded (tensile force -50%).

Ordering Details: e.g.: 160 600 00, Open-Length Timing Belt T 2.5, Width 6 mm.

T Open-Length Timing Belts

Product No.	Profile	Belt Width mm	Belt Length max. m	perm. Tensile Force[1] N	Weight g/m	Matching Fixing Plate[2] Product No.
160 600 00	T 2,5	6	50	72	15	**160 699 00**
160 700 00	T 2,5	10	50	120	25	**160 799 00**
162 600 00	T 5	10	100	330	25	**162 699 00**
162 700 00	T 5	16	100	528	40	**162 799 00**
162 800 00	T 5	25	100	825	63	**162 899 00**
162 870 00	T 5	32	100	1056	80	**162 898 00**
162 880 00	T 5	50	100	1650	126	**162 899 01**
164 600 00	T 10	16	100	1248	77	**164 699 00**
164 700 00	T 10	25	100	1950	120	**164 799 00**
164 800 00	T 10	32	100	2495	154	**164 899 00**
164 860 00	T 10	50	100	3900	240	**164 999 00**
164 900 00	T 10	100	100	7800	480	**164 999 01**
165 600 00	T 20	50	100	7480	395	-
165 700 00	T 20	75	100	11220	585	-
165 800 00	T 20	100	100	18480	780	-

AT Open-Length Timing Belts

Product No.	Profile	Belt Width mm	Belt Length max. m	perm. Tensile Force[1] N	Weight g/m	Matching Fixing Plate[2] Product No.
166 600 00	AT 5	10	100	700	34	**166 699 00**
166 700 00	AT 5	16	100	1120	55	**166 799 00**
166 800 00	AT 5	25	100	1750	85	**166 899 00**
166 870 00	AT 5	32	100	2240	110	**166 898 00**
166 880 00	AT 5	50	100	3500	170	**166 899 01**
168 600 00	AT 10	16	100	2080	101	**168 699 00**
168 700 00	AT 10	25	100	3250	158	**168 799 00**
168 800 00	AT 10	32	100	4160	202	**168 899 00**
168 860 00	AT 10	50	100	6500	316	**168 999 00**
168 900 00	AT 10	100	100	13000	632	**168 999 01**
169 600 00	AT 20	50	100	11200	493	-
169 700 00	AT 20	75	100	16800	740	-
169 800 00	AT 20	100	100	24800	987	-

HTD Open-Length Timing Belts

Product No.	Profile	Belt Width mm	Belt Length max. m	perm. Tensile Force[1] N	Weight g/m	Matching Fixing Plate[2] Product No.
173 661 00	5 M	10[3]	100	780	48	**173 199 00**
173 663 00	5 M	15	100	1268	72	**173 399 00**
173 665 00	5 M	25	100	2145	120	**173 599 00**
173 667 00	5 M	50	100	4290	240	-
175 661 00	8 M	20	100	2640	140	**175 199 00**
175 663 00	8 M	30	100	3960	210	**175 399 00**
175 664 00	8 M	40	100	5280	280	-
175 665 00	8 M	50	100	7480	350	**175 599 00**
175 668 00	8 M	100	100	14960	700	-
177 661 00	14 M	40	100	9000	454	**177 661 99**
177 663 00	14 M	55	100	12800	625	**177 663 99**
177 665 00	14 M	85	100	21600	964	**177 665 99**

[1] Permissable force at open length. When welded, the force is reduced to 50%.
[2] Fixing Plates Page 171.
[3] Fits on pulleys for belt width 9 mm.



Timing Belt Welding within 24h-Service

Other types and belt widths on request.

Open-Length Timing Belts from Neoprene (Rubber)

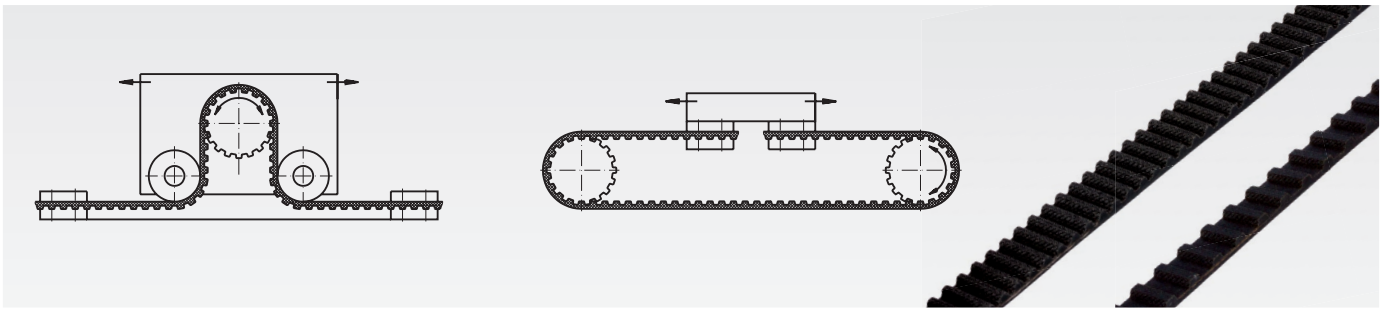

Material: Neoprene with tensile member of glass-fibre. Neoprene belts cannot be welded.

Ordering Details: e.g.: 171 100 00, Open-Length Timing Belt HTD 3M, Width 9 mm.

HTD Open-Length Timing Belts

Product No.	Profile	Belt Width mm	Belt Length max. m	perm. Tensile Force for Belt N	Weight g/m	Matching Fixing Plate[1] Product No.
171 100 00	3 M	9	30	90	27	**171 199 00**
171 300 00	3 M	15	30	150	44	**171 399 00**
173 100 00	5 M	10*	30	208	37	**173 199 00**
173 300 00	5 M	15	30	312	61	**173 399 00**
173 500 00	5 M	25	30	520	102	**173 599 00**
175 100 00	8 M	20	30	750	128	**175 199 00**
175 300 00	8 M	30	30	1125	192	**175 399 00**
175 500 00	8 M	50	30	1875	320	**175 599 00**
175 700 00	8 M	85	30	3187	544	**175 799 00**

[1] Fixing Plates page 171.

[2] Fits on pulleys for belt width 9 mm.

Open-Length Inch Timing Belts

Product No.	Profile	Pitch mm	Belt Width Inch	Belt Width mm	Belt Length max. m	perm. Tensile Force,Belt N	Weight g/m	Matching Fixing Plate[1] Product No.
180 800 00	XL	5,08	0,37	9,53	30	53	30	**180 899 00**
182 600 00	L	9,525	0,50	12,70	30	124	40	**182 699 00**
182 700 00	L	9,525	0,75	19,10	30	187	70	**182 799 00**
182 800 00	L	9,525	1,00	25,40	30	249	90	**182 899 00**
184 500 00	H	12,7	0,75	19,10	30	449	100	**184 599 00**
184 600 00	H	12,7	1,00	25,40	30	597	140	**184 699 00**
184 700 00	H	12,7	1,50	38,10	30	895	200	**184 799 00**
184 800 00	H	12,7	2,00	50,80	30	1194	270	**184 899 00**

[1] Fixing Plates page 171.

Other types and belt widths on request.

Timing Belts in Special Lengths:

- Open length belts from thermoplastic polyurethane (TPU) can get welded to endless belts of any number of teeth, beginning from pitch 2.5mm and width 6mm. Minimum length 420mm, depending on the belt profile and width.
- The welding is done directly in the timing belt stock of ***MÄDLER***®. Normally, the welded belts should be sent to the customer within 24 hours after receiving the order.
- From one-off pieces to large series at very short notice.

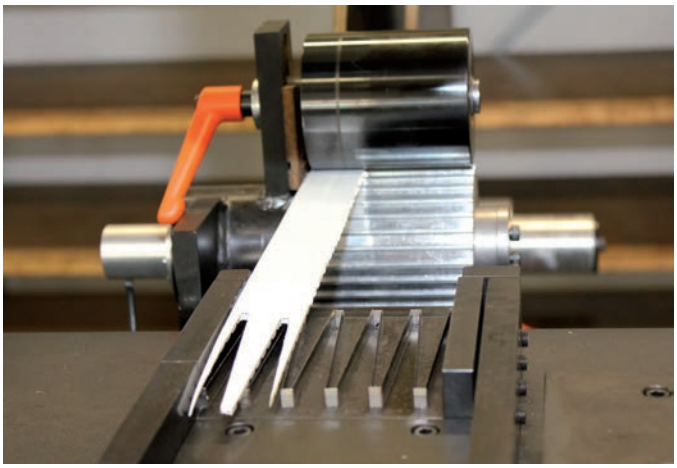

Cutting and Welding of Timing Belts:

- The ends get punched into the shape of fingers.
- The welding is done at high temperature. By this, the plastic melts and leads to a homogenous structure.
- After cooling down, the belt is ready to use and can be shiped immediately.
- The tensile members don´t get welded. So the tensile strength of a welded belt is approximate 50% of the open length belt.
- Alternatively, belts in special lengths also can get endless extruded. Minimum lengths and minimum order quantities have to be considered. Price and delivery time on request.

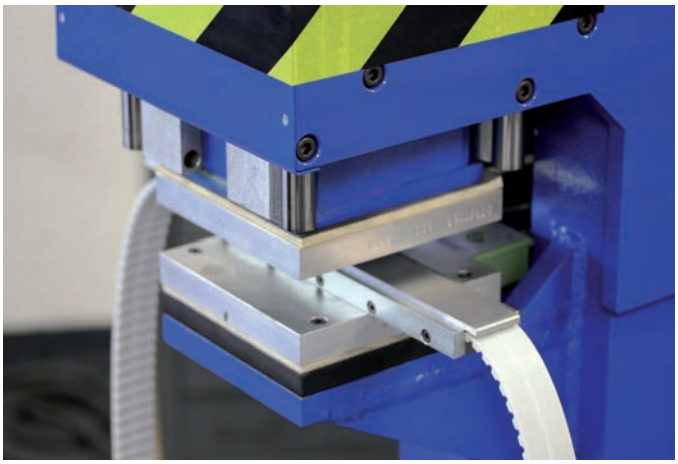

Price Calculator on the Internet:

- At www.maedler.de in the section Timing Belts and Pulleys, in the subsection Welding of Timing Belts.
- Quick overview about the stock range of profiles, widths and minimum lengths of weldable belts.
- After having selected a belt, you see the part number, product text and the prices for several quantities.

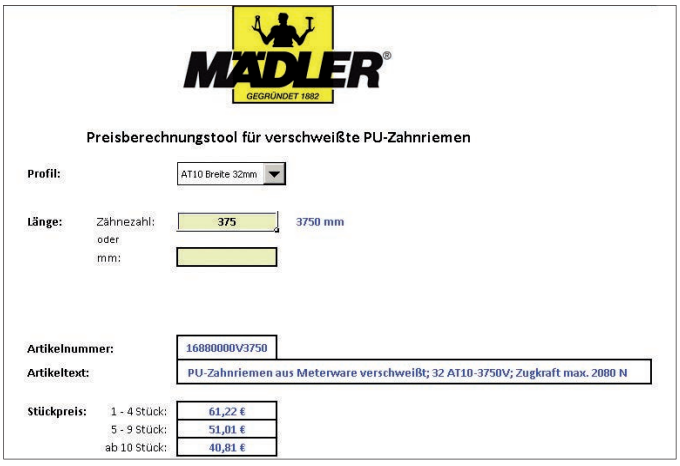

Other Special Belts (on request):

- Timing belts with teeth in V-formation.
- Self-tracking timing belts with central guide.
- Convoyer belts with texture or welded cams on the backside.
- Round belts and flat belts.
- V-belts and timing belts with tissue layer. Timing belts PAZ with polyamide fabric on the tooth side are on stock in many profiles and widths.

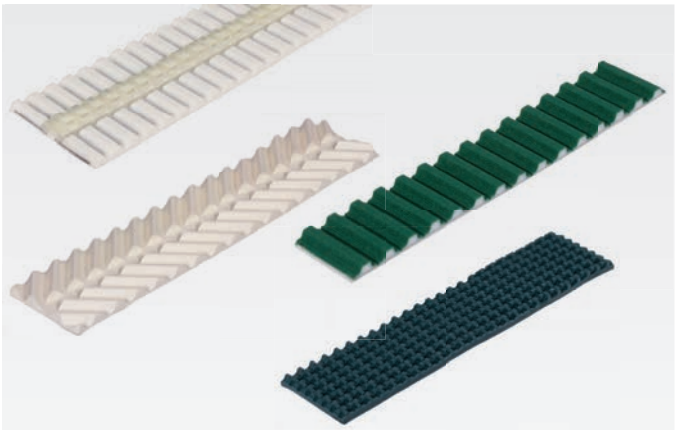

Timing Belts Profile T and AT

Material: Endless belts from cast polyurethane (PU), with steel tensile member. Open length belts from thermoplastic polyurethane TPU, weldable, with steel tensile member.

Timing belts in metric dimensions. Classical shape with trapezoid teeth.

Type T: Standard type for normal set-ups in size T 2.5, T 5 and T 10 in several widths.

Type AT: Reinforced type for the transmission of higher torques in sizes AT 5 and AT 10 in several widths. Due to their lower flexibility AT timing belts require a larger pulley diameter than T timing belts.

Please note: T timing belts only run on T pulleys.
AT timing belts only run on AT pulleys.

Special length: Open length belts, which are sold by the meter, are made from thermoplastic TPU and can get welded. To do this, the belt ends are cut in V-shape or finger shape, depending on the belt width, and then the TPU gets welded. The steel tensile member doesn´t get welded. Through the large overlap at the welding point a high durability is reached. It does however rate approx. 50% below the power transmission rate of the open length belts.

T-Timing Belts Profile T 2.5

Material: Endless belts from cast polyurethane (PU), with steel tensile member. Open length belts from thermoplastic polyurethane TPU, weldable, with steel tensile member.

Metric



Ordering Details: e.g.: Product No. 160 601 00, PU-Timing Belt, Profile T 2.5, Belt Width 6 mm, 48 Teeth

Profile T 2.5, Pitch 2.5 mm

Product No. Width 6mm	Product No. Width 10mm	Effective Length mm	Number of teeth
160 601 00	160 701 00	120	48
160 602 00	160 702 00	145	58
160 603 00	160 703 00	160	64
160 604 00	160 704 00	177,5	71
160 605 00	160 705 00	200	80
160 606 00	160 706 00	230	92
160 607 00	160 707 00	245	98
160 608 00	160 708 00	265	106
160 609 00	160 709 00	285	114
160 610 00	160 710 00	305	122
160 611 00	160 711 00	317,5	127
160 612 00	160 712 00	330	132
160 613 00	160 713 00	380	152
160 614 00	160 714 00	420	168
160 615 00	160 715 00	480	192
160 617 00	160 717 00	500	200
160 618 00	160 718 00	600	240
160 619 00	160 719 00	620	248
160 620 00	160 720 00	650	260
160 621 00	160 721 00	780	312
160 622 00	160 722 00	915	366
160 623 00	160 723 00	950	380
160 600 00	160 700 00	Open length	-

Belts sold by the meter see page 172.
Performance figures see page 132.
Permissible tensile forces for the belts see page 129.

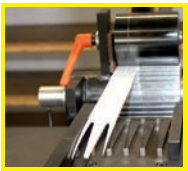

Timing Belt Welding within 24h-Service

T-Timing Belts

Material: Endless belts from cast polyurethane (PU), with steel tensile member.

Metric



Ordering Details: e.g.: Product No. 162 601 00, PU-Timing Belt, Profile T 5, 165 mm, Belt Width 10 mm, 33 Teeth

Profile T 5, Pitch 5 mm

Product No. Width 10mm	Product No. Width 16mm	Product No. Width 25mm	Product No. Width 32mm	Length* mm	No. of teeth
162 601 00	162 701 00	162 801 00	-	165	33
162 602 00	162 702 00	162 802 00	-	185	37
162 603 00	162 703 00	162 803 00	-	200	40
162 604 00	162 704 00	162 804 00	162 870 04	215	43
162 605 00	162 705 00	162 805 00	162 870 05	220	44
162 606 00	162 706 00	162 806 00	162 870 06	225	45
162 607 00	162 707 00	162 807 00	162 870 07	245	49
162 608 00	162 708 00	162 808 00	162 870 08	250	50
162 609 00	162 709 00	162 809 00	162 870 09	255	51
162 610 00	162 710 00	162 810 00	162 870 10	260	52
162 611 00	162 711 00	162 811 00	162 870 11	270	54
162 612 00	162 712 00	162 812 00	162 870 12	275	55
162 613 00	162 713 00	162 813 00	162 870 13	280	56
162 614 00	162 714 00	162 814 00	162 870 14	295	59
162 615 00	162 715 00	162 815 00	162 870 15	300	60
162 616 00	162 716 00	162 816 00	162 870 16	305	61
162 617 00	162 717 00	162 817 00	162 870 17	325	65
162 618 00	162 718 00	162 818 00	162 870 18	330	66
162 619 00	162 719 00	162 819 00	162 870 19	340	68
162 620 00	162 720 00	162 820 00	162 870 20	350	70
162 621 00	162 721 00	162 821 00	162 870 21	355	71
162 622 00	162 722 00	162 822 00	162 870 22	365	73
162 623 00	162 723 00	162 823 00	162 870 23	375	75
162 624 00	162 724 00	162 824 00	162 870 24	390	78
162 625 00	162 725 00	162 825 00	162 870 25	400	80
162 626 00	162 726 00	162 826 00	162 870 26	410	82
162 627 00	162 727 00	162 827 00	162 870 27	420	84
162 628 00	162 728 00	162 828 00	162 870 28	425	85
162 629 00	162 729 00	162 829 00	162 870 29	450	90
162 630 00	162 730 00	162 830 00	162 870 30	455	91
162 631 00	162 731 00	162 831 00	162 870 31	465	93
162 632 00	162 732 00	162 832 00	162 870 32	475	95
162 633 00	162 733 00	162 833 00	162 870 33	480	96
162 634 00	162 734 00	162 834 00	162 870 34	500	100
162 635 00	162 735 00	162 835 00	162 870 35	510	102
162 636 00	162 736 00	162 836 00	162 870 36	525	105
162 637 00	162 737 00	162 837 00	162 870 37	545	109
162 638 00	162 738 00	162 838 00	162 870 38	550	110
162 639 00	162 739 00	162 839 00	162 870 39	560	112
162 640 00	162 740 00	162 840 00	162 870 40	575	115
162 641 00	162 741 00	162 841 00	162 870 41	600	120
162 642 00	162 742 00	162 842 00	162 870 42	610	122
162 643 00	162 743 00	162 843 00	162 870 43	620	124
162 644 00	162 744 00	162 844 00	162 870 44	630	126
162 645 00	162 745 00	162 845 00	162 870 45	640	128
162 646 00	162 746 00	162 846 00	162 870 46	650	130
162 647 00	162 747 00	162 847 00	162 870 47	660	132
162 648 00	162 748 00	162 848 00	162 870 48	690	138
162 649 00	162 749 00	162 849 00	162 870 49	695	139
162 650 00	162 750 00	162 850 00	162 870 50	700	140
162 651 00	162 751 00	162 851 00	162 870 51	720	144
162 652 00	162 752 00	162 852 00	162 870 52	750	150
162 653 00	162 753 00	162 853 00	162 870 53	780	156
162 654 00	162 754 00	162 854 00	162 870 54	815	163
162 655 00	162 755 00	162 855 00	162 870 55	840	168
162 656 00	162 756 00	162 856 00	162 870 56	850	170
162 657 00	162 757 00	162 857 00	162 870 57	900	180
162 658 00	162 758 00	162 858 00	162 870 58	990	198
162 659 00	162 759 00	162 859 00	162 870 59	1000	200
162 660 00	162 760 00	162 860 00	162 870 60	1075	215
162 661 00	162 761 00	162 861 00	162 870 61	1100	220
162 662 00	162 762 00	162 862 00	162 870 62	1215	243
162 663 00	162 763 00	162 863 00	162 870 63	1380	276
162 664 00	162 764 00	162 864 00	162 870 64	1440	288
162 600 00	162 700 00	162 800 00	162 870 00	Open length**	

* Effective length.
** Open length from thermoplastic polyurethane (TPU), with steel tensile member.

Profile T 10, Pitch 10 mm

Product No. Width 16mm	Product No. Width 25mm	Product No. Width 32mm	Product No. Width 50mm	Length* mm	No. of teeth
164 601 00	164 701 00	164 801 00	164 861 00	260	26
164 602 00	164 702 00	164 802 00	164 862 00	370	37
164 603 00	164 703 00	164 803 00	164 863 00	400	40
164 604 00	164 704 00	164 804 00	164 864 00	410	41
164 605 00	164 705 00	164 805 00	164 865 00	440	44
164 606 00	164 706 00	164 806 00	164 866 00	450	45
164 607 00	164 707 00	164 807 00	164 867 00	500	50
164 608 00	164 708 00	164 808 00	164 868 00	530	53
164 609 00	164 709 00	164 809 00	164 869 00	560	56
164 610 00	164 710 00	164 810 00	164 870 00	610	61
164 611 00	164 711 00	164 811 00	164 871 00	630	63
164 612 00	164 712 00	164 812 00	164 872 00	660	66
164 613 00	164 713 00	164 813 00	164 873 00	690	69
164 614 00	164 714 00	164 814 00	164 874 00	700	70
164 615 00	164 715 00	164 815 00	164 875 00	720	72
164 616 00	164 716 00	164 816 00	164 876 00	750	75
164 617 00	164 717 00	164 817 00	164 877 00	780	78
164 618 00	164 718 00	164 818 00	164 878 00	810	81
164 619 00	164 719 00	164 819 00	164 879 00	840	84
164 620 00	164 720 00	164 820 00	164 880 00	880	88
164 621 00	164 721 00	164 821 00	164 881 00	890	89
164 622 00	164 722 00	164 822 00	164 882 00	900	90
164 623 00	164 723 00	164 823 00	164 883 00	920	92
164 624 00	164 724 00	164 824 00	164 884 00	960	96
164 625 00	164 725 00	164 825 00	164 885 00	970	97
164 626 00	164 726 00	164 826 00	164 886 00	980	98
164 627 00	164 727 00	164 827 00	164 887 00	1010	101
164 628 00	164 728 00	164 828 00	164 888 00	1080	108
164 629 00	164 729 00	164 829 00	164 889 00	1110	111
164 630 00	164 730 00	164 830 00	164 890 00	1140	114
164 631 00	164 731 00	164 831 00	164 891 00	1150	115
164 632 00	164 732 00	164 832 00	164 892 00	1210	121
164 633 00	164 733 00	164 833 00	164 893 00	1240	124
164 634 00	164 734 00	164 834 00	164 894 00	1250	125
164 635 00	164 735 00	164 835 00	164 895 00	1300	130
164 636 00	164 736 00	164 836 00	164 896 00	1320	132
164 637 00	164 737 00	164 837 00	164 897 00	1350	135
164 638 00	164 738 00	164 838 00	164 898 00	1390	139
164 639 00	164 739 00	164 839 00	164 979 00	1400	140
164 640 00	164 740 00	164 840 00	164 980 00	1420	142
164 641 00	164 741 00	164 841 00	164 981 00	1440	144
164 642 00	164 742 00	164 842 00	164 982 00	1450	145
164 643 00	164 743 00	164 843 00	164 983 00	1460	146
164 644 00	164 744 00	164 844 00	164 984 00	1500	150
164 645 00	164 745 00	164 845 00	164 985 00	1560	156
164 646 00	164 746 00	164 846 00	164 986 00	1610	161
164 647 00	164 747 00	164 847 00	164 987 00	1750	175
164 648 00	164 748 00	164 848 00	164 988 00	1780	178
164 649 00	164 749 00	164 849 00	164 989 00	1880	188
164 650 00	164 750 00	164 850 00	164 990 00	1960	196
164 651 00	164 751 00	164 851 00	164 991 00	2250	225
164 600 00	164 700 00	164 800 00	164 860 00	Open length**	

Endless belts welded together from material sold by the meter can be supplied on request in any special length.

Belts sold by the meter and fixing plates see page 171.

Performance figures see page 132.

Permissible tensile forces for the belts see page 129.

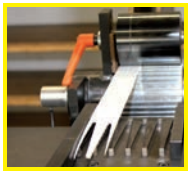

Timing Belt Welding within 24h-Service

AT-Timing Belts

Material: Endless belts from cast polyurethane (PU), with steel tensile member.

Metric



Ordering Details: e.g.: Product No. 166 601 00, PU Timing Belts, Profile AT 5, 225 mm, Belt Width 10 mm, 45 Teeth

Profile AT 5, Pitch 5 mm

Product No. Width 10mm	Product No. Width 16mm	Product No. Width 25mm	Product No. Width 32mm	Length* mm	No. of teeth
166 601 00	166 701 00	166 801 00	-	225	45
166 602 00	166 702 00	166 802 00	-	255	51
166 603 00	166 703 00	166 803 00	-	275	55
166 604 00	166 704 00	166 804 00	166 870 04	280	56
166 605 00	166 705 00	166 805 00	166 870 05	300	60
166 606 00	166 706 00	166 806 00	166 870 06	340	68
166 607 00	166 707 00	166 807 00	166 870 07	375	75
166 608 00	166 708 00	166 808 00	166 870 08	390	78
166 609 00	166 709 00	166 809 00	166 870 09	420	84
166 610 00	166 710 00	166 810 00	166 870 10	455	91
166 611 00	166 711 00	166 811 00	166 870 11	500	100
166 612 00	166 712 00	166 812 00	166 870 12	545	109
166 613 00	166 713 00	166 813 00	166 870 13	600	120
166 614 00	166 714 00	166 814 00	166 870 14	610	122
166 615 00	166 715 00	166 815 00	166 870 15	630	126
166 616 00	166 716 00	166 816 00	166 870 16	660	132
166 617 00	166 717 00	166 817 00	166 870 17	720	144
166 618 00	166 718 00	166 818 00	166 870 18	750	150
166 619 00	166 719 00	166 819 00	166 870 19	780	156
166 620 00	166 720 00	166 820 00	166 870 20	825	165
166 621 00	166 721 00	166 821 00	166 870 21	975	195
166 622 00	166 722 00	166 822 00	166 870 22	1050	210
166 623 00	166 723 00	166 823 00	166 870 23	1125	225
166 624 00	166 724 00	166 824 00	166 870 24	1500	300
166 600 00	166 700 00	166 800 00	166 870 00	Open length**	

Profile AT 10, Pitch 10 mm

Product No. Width 16mm	Product No. Width 25mm	Product No. Width 32mm	Product No. Width 50mm	Length* mm	No. of teeth
168 601 00	168 701 00	168 801 00	168 831 00	500	50
168 602 00	168 702 00	168 802 00	168 832 00	560	56
168 603 00	168 703 00	168 803 00	168 833 00	610	61
168 604 00	168 704 00	168 804 00	168 834 00	660	66
168 605 00	168 705 00	168 805 00	168 835 00	700	70
168 606 00	168 706 00	168 806 00	168 836 00	730	73
168 607 00	168 707 00	168 807 00	168 837 00	780	78
168 608 00	168 708 00	168 808 00	168 838 00	800	80
168 609 00	168 709 00	168 809 00	168 839 00	810	81
168 610 00	168 710 00	168 810 00	168 840 00	840	84
168 611 00	168 711 00	168 811 00	168 841 00	890	89
168 612 00	168 712 00	168 812 00	168 842 00	920	92
168 613 00	168 713 00	168 813 00	168 843 00	960	96
168 614 00	168 714 00	168 814 00	168 844 00	980	98
168 615 00	168 715 00	168 815 00	168 845 00	1010	101
168 616 00	168 716 00	168 816 00	168 846 00	1050	105
168 617 00	168 717 00	168 817 00	168 847 00	1080	108
168 618 00	168 718 00	168 818 00	168 848 00	1150	115
168 619 00	168 719 00	168 819 00	168 849 00	1210	121
168 620 00	168 720 00	168 820 00	168 850 00	1250	125
168 621 00	168 721 00	168 821 00	168 851 00	1320	132
168 622 00	168 722 00	168 822 00	168 852 00	1400	140
168 623 00	168 723 00	168 823 00	168 853 00	1500	150
168 624 00	168 724 00	168 824 00	168 854 00	1600	160
168 625 00	168 725 00	168 825 00	168 855 00	1700	170
168 626 00	168 726 00	168 826 00	168 856 00	1800	180
168 600 00	168 700 00	168 800 00	168 860 00	Open length**	

* Effective length.
** Open length from thermoplastic polyurethane (TPU), with steel tensile member.

Endless belts welded together from material sold by the meter can be supplied on request in any special length.

Belts sold by the meter and fixing plates see page 171.

Performance figures see page 132.

Permissible tensile forces for the belts see page 129.

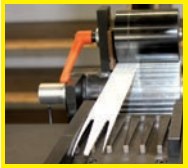

Timing Belt Welding within 24h-Service

HTD-Timing Belts

Material: Neoprene with glass-fibre tensile member.
Contact surface lined with nylon reinforcement.

HTD (High Torque Drive) timing belt with semi-circular teeth profile for a more constant progress of stress in the tooth profile, for the transmission of high loads.

Ordering Details: e.g.: 171 105 00, HTD Timing Belts, Profile 3M, 111 mm, Belt Width 9 mm, 37 Teeth

HTD



Profile HTD 3M, Pitch 3 mm

Product No. Width 9 mm	Product No. Width 15 mm	Effective Length mm	Number of teeth
171 105 00	171 305 00	111	37
171 108 00	171 308 00	144	48
171 110 00	171 310 00	150	50
171 112 00	171 312 00	159	53
171 114 00	171 314 00	168	56
171 116 00	171 316 00	177	59
171 118 00	171 318 00	201	67
171 120 00	171 320 00	210	70
171 121 00	171 321 00	213	71
171 122 00	171 322 00	216	72
171 124 00	171 324 00	225	75
171 127 00	171 327 00	252	84
171 128 00	171 328 00	255	85
171 130 00	171 330 00	267	89
171 132 00	171 332 00	285	95
171 133 00	171 333 00	300	100
171 134 00	171 334 00	312	104
171 135 00	171 335 00	318	106
171 137 00	171 337 00	336	112
171 138 00	171 338 00	339	113
171 140 00	171 340 00	363	121
171 142 00	171 342 00	384	128
171 143 00	171 343 00	390	130
171 145 00	171 345 00	420	140
171 147 00	171 347 00	447	149
171 149 00	171 349 00	474	158
171 150 00	171 350 00	486	162
171 152 00	171 352 00	501	167
171 154 00	171 354 00	513	171
171 156 00	171 356 00	531	177
171 157 00	171 357 00	537	179
171 159 00	171 359 00	564	188
171 161 00	171 361 00	597	199
171 162 00	171 362 00	606	202
171 164 00	171 364 00	633	211
171 167 00	171 367 00	669	223
171 170 00	171 370 00	711	237
171 173 00	171 373 00	882	294
171 175 00	171 375 00	945	315
171 178 00	171 378 00	1062	354
171 180 00	171 380 00	1125	375
171 184 00	171 384 00	1263	421
171 188 00	171 388 00	1500	500
171 190 00	171 390 00	1530	510
171 192 00	171 392 00	1569	523
171 100 00	171 300 00	Open length	-

Profile HTD 5M, Pitch 5 mm

Product No. Width 9 mm	Product No. Width 15 mm	Product No. Width 25 mm	Effective Length mm	No. of teeth
173 112 00	173 312 00	173 512 00	330	66
173 114 00	173 314 00	173 514 00	350	70
173 116 00	173 316 00	173 516 00	375	75
173 118 00	173 318 00	173 518 00	400	80
173 120 00	173 320 00	173 520 00	425	85
173 122 00	173 322 00	173 522 00	450	90
173 126 00	173 326 00	173 526 00	500	100
173 128 00	173 328 00	173 528 00	535	107
173 130 00	173 330 00	173 530 00	565	113
173 132 00	173 332 00	173 532 00	600	120
173 133 00	173 333 00	173 533 00	615	123
173 134 00	173 334 00	173 534 00	635	127
173 136 00	173 336 00	173 536 00	665	133
173 139 00	173 339 00	173 539 00	710	142
173 141 00	173 341 00	173 541 00	740	148
173 142 00	173 342 00	173 542 00	755	151
173 144 00	173 344 00	173 544 00	800	160
173 146 00	173 346 00	173 546 00	835	167
173 149 00	173 349 00	173 549 00	890	178
173 151 00	173 351 00	173 551 00	925	185
173 152 00	173 352 00	173 552 00	950	190
173 154 00	173 354 00	173 554 00	1000	200
173 156 00	173 356 00	173 556 00	1050	210
173 159 00	173 359 00	173 559 00	1125	225
173 163 00	173 363 00	173 563 00	1270	254
173 167 00	173 367 00	173 567 00	1420	284
173 169 00	173 369 00	173 569 00	1500	300
173 171 00	173 371 00	173 571 00	1595	319
173 175 00	173 375 00	173 575 00	1790	358
173 176 00	173 376 00	173 576 00	1800	360
173 178 00	173 378 00	173 578 00	1870	374
173 179 00	173 379 00	173 579 00	1895	379
173 182 00	173 382 00	173 582 00	2000	400
173 188 00	173 388 00	173 588 00	2525	505
173 100 00*	173 300 00	173 500 00	Open length	-

* Width 10 mm

Belts sold by the meter see page 172.
Performance figures see page 132.
Permissible tensile forces for the belts see page 129.

HTD-Timing Belts

Material: Neoprene with glass-fibre tensile member.
Contact surface lined with nylon reinforcement.

HTD (High Torque Drive) timing belt with half-round teeth for a more even progress of stress in the tooth profile, used for the transmission of high powers.

Ordering Details: e.g.: 175 105 00, HTD Timing Belts, Profile 8M, 480 mm, Belt Width 20 mm, 60 Teeth

HTD



Profile HTD 8M, Pitch 8 mm

Product No. Width 20mm	Product No. Width 30mm	Product No. Width 50mm	Product No. Width 85mm	Effective Length mm	No. of teeth
175 105 00	175 305 00	175 505 00	175 705 00	480	60
175 107 00	175 307 00	175 507 00	175 707 00	560	70
175 109 00	175 309 00	175 509 00	175 709 00	600	75
175 111 00	175 311 00	175 511 00	175 711 00	640	80
175 112 00	175 312 00	175 512 00	175 712 00	656	82
175 114 00	175 314 00	175 514 00	175 714 00	720	90
175 117 00	175 317 00	175 517 00	175 717 00	800	100
175 119 00	175 319 00	175 519 00	175 719 00	880	110
175 121 00	175 321 00	175 521 00	175 721 00	960	120
175 124 00	175 324 00	175 524 00	175 724 00	1040	130
175 126 00	175 326 00	175 526 00	175 726 00	1120	140
175 128 00	175 328 00	175 528 00	175 728 00	1200	150
175 130 00	175 330 00	175 530 00	175 730 00	1280	160
175 132 00	175 332 00	175 532 00	175 732 00	1360	170
175 134 00	175 334 00	175 534 00	175 734 00	1440	180
175 137 00	175 337 00	175 537 00	175 737 00	1600	200
175 140 00	175 340 00	175 540 00	175 740 00	1760	220
175 142 00	175 342 00	175 542 00	175 742 00	1800	225
175 144 00	175 344 00	175 544 00	175 744 00	2000	250
175 148 00	175 348 00	175 548 00	175 748 00	2400	300
175 152 00	175 352 00	175 552 00	175 752 00	2800	350
175 100 00	175 300 00	175 500 00	175 700 00	Open length	-

Profile HTD 14M, Pitch 14 mm

Product No. Width 40 mm	Product No. Width 55 mm	Product No. Width 85 mm	Effective Length mm	No. of teeth
177 108 00	177 308 00	177 508 00	966	69
177 111 00	177 311 00	177 511 00	1190	85
177 114 00	177 314 00	177 514 00	1400	100
177 117 00	177 317 00	177 517 00	1610	115
177 120 00	177 320 00	177 520 00	1778	127
177 122 00	177 322 00	177 522 00	1890	135
177 125 00	177 325 00	177 525 00	2100	150
177 128 00	177 328 00	177 528 00	2310	165
177 130 00	177 330 00	177 530 00	2450	175
177 132 00	177 332 00	177 532 00	2590	185
177 136 00	177 336 00	177 536 00	2800	200
177 139 00	177 339 00	177 539 00	3150	225
177 142 00	177 342 00	177 542 00	3500	250
177 145 00	177 345 00	177 545 00	3850	275
177 148 00	177 348 00	177 548 00	4326	309
177 151 00	177 351 00	177 551 00	4578	327

Belts sold by the meter see page 172.
Performance figures see page 132.
Permissible tensile forces for the belts see page 129.

Standard Timing Belt, Inch Pitch

Material: Neoprene with glass-fibre tensile member.
Teeth surface fabric-coated.

Timing belt with inch dimensions, classical shape with trapezoid teeth.



Ordering Details: e.g.: Product No. 181 802 00, Standard Timing Belt, Pitch MXL = 0.08“, 91.44 mm

Pitch MXL = 0.08“ (2.032 mm), Standard-Width 025 (1/4“ = 6.35 mm)

Product No.	Type	Nom. Length Inch	Nom. Length mm	Number of teeth
181 802 00	36 MXL	3,6	91,44	45
181 804 00	40 MXL	4,0	101,60	50
181 807 00	44 MXL	4,4	111,76	55
181 810 00	48 MXL	4,8	121,92	60
181 815 00	52 MXL	5,2	132,08	65
181 820 00	56 MXL	5,6	142,24	70
181 825 00	60 MXL	6,0	152,40	75
181 830 00	64 MXL	6,4	162,56	80
181 832 00	68 MXL	6,8	172,72	85
181 835 00	72 MXL	7,2	182,88	90
181 840 00	80 MXL	8,0	203,20	100
181 845 00	88 MXL	8,8	223,52	110
181 850 00	100 MXL	10,0	254,00	125
181 855 00	112 MXL	11,2	284,48	140
181 860 00	124 MXL	12,4	314,96	155
181 865 00	140 MXL	14,0	355,60	175
181 870 00	160 MXL	16,0	406,40	200
181 875 00	180 MXL	18,0	457,20	225
181 880 00	200 MXL	20,0	508,00	250
181 885 00	224 MXL	22,4	568,96	280
181 890 00	240 MXL	24,0	609,60	300
181 895 00	256 MXL	25,6	650,24	320

Belts MXL sold by the meter on request.
Other widths available on request.

Pitch XL = 1/5“ (5.08 mm), Standard-Width 037 (3/8“ = 9.53 mm)

Product No.	Type	Nom. Length Inch	Nom. Length mm	Number of teeth
180 812 00	60 XL	6	152,4	30
180 814 00	70 XL	7	177,8	35
180 816 00	80 XL	8	203,2	40
180 818 00	90 XL	9	228,6	45
180 820 00	100 XL	10	254,0	50
180 822 00	110 XL	11	279,4	55
180 824 00	120 XL	12	304,8	60
180 826 00	130 XL	13	330,2	65
180 828 00	140 XL	14	355,6	70
180 830 00	150 XL	15	381,0	75
180 832 00	160 XL	16	406,4	80
180 834 00	170 XL	17	431,8	85
180 836 00	180 XL	18	457,2	90
180 838 00	190 XL	19	482,6	95
180 840 00	200 XL	20	508,0	100
180 842 00	210 XL	21	533,4	105
180 844 00	220 XL	22	558,8	110
180 846 00	230 XL	23	584,2	115
180 848 00	240 XL	24	609,6	120
180 850 00	250 XL	25	635,0	125
180 852 00	260 XL	26	660,4	130
180 800 00	XL	Open length		

Pitch L = 3/8“ (9.525 mm) Standard Widths 050 (1/2“= 12.7 mm); 075 (3/4“= 19.1 mm); 100 (1“= 25.4 mm)

Product No. Width 050	Product No. Width 075	Product No. Width 100	Type	Nom. Length Inch	Nom. Length mm	Number of teeth
182 612 00	182 712 00	182 812 00	124 L	12,375	314,33	33
182 615 00	182 715 00	182 815 00	150 L	15	381	40
182 619 00	182 719 00	182 819 00	187 L	18,75	476,25	50
182 621 00	182 721 00	182 821 00	210 L	21	533,4	56
182 622 00	182 722 00	182 822 00	225 L	22,5	571,5	60
182 624 00	182 724 00	182 824 00	240 L	24	609,6	64
182 626 00	182 726 00	182 826 00	255 L	25,5	647,7	68
182 627 00	182 727 00	182 827 00	270 L	27	685,8	72
182 629 00	182 729 00	182 829 00	285 L	28,5	723,9	76
182 630 00	182 730 00	182 830 00	300 L	30	762	80
182 632 00	182 732 00	182 832 00	322 L	32,25	819,15	86
182 635 00	182 735 00	182 835 00	345 L	34,5	876,3	92
182 637 00	182 737 00	182 837 00	367 L	36,75	933,45	98
182 639 00	182 739 00	182 839 00	390 L	39	990,6	104
182 642 00	182 742 00	182 842 00	420 L	42	1066,8	112
182 645 00	182 745 00	182 845 00	450 L	45	1143	120
182 648 00	182 748 00	182 848 00	480 L	48	1219,2	128
182 651 00	182 751 00	182 851 00	510 L	51	1295,4	136
182 654 00	182 754 00	182 854 00	540 L	54	1371,6	144
182 660 00	182 760 00	182 860 00	600 L	60	1524	160
182 600 00	182 700 00	182 800 00	L	Open length		

Belts sold by the meter see page 172.
Performance figures see page 132.
Permissible tensile forces for the belts see page 129.

Standard Timing Belt, Inch Pitch

Material: Neoprene with glass-fibre tensile member.
Teeth surface fabric-coated.

Timing belt with inch dimensions, classical shape with trapezoid teeth.

Inch



Ordering Details: e.g.: Product No. 184 513 00, Standard Timing Belt, Pitch H = 1/2", Width 075, 609.6 mm

Pitch H = 1/2" (12.7 mm)
Standard Width 075 (3/4"= 19.1 mm); 100 (1"= 25.4 mm); 150 (1 1/2" = 38.1 mm); 200 (2" = 50.8 mm)

Product No. Width 075	Product No. Width 100	Product No. Width 150	Product No. Width 200	Type	Nom. Length Inch	Nom. Length mm	Number of teeth
184 513 00	184 613 00	184 713 00	184 813 00	240 H	24	609,6	48
184 515 00	184 615 00	184 715 00	184 815 00	270 H	27	685,8	54
184 517 00	184 617 00	184 717 00	184 817 00	300 H	30	762	60
184 519 00	184 619 00	184 719 00	184 819 00	330 H	33	838,2	66
184 520 00	184 620 00	184 720 00	184 820 00	360 H	36	914,4	72
184 522 00	184 622 00	184 722 00	184 822 00	390 H	39	990,6	78
184 524 00	184 624 00	184 724 00	184 824 00	420 H	42	1066,8	84
184 525 00	184 625 00	184 725 00	184 825 00	450 H	45	1143	90
184 527 00	184 627 00	184 727 00	184 827 00	480 H	48	1219,2	96
184 529 00	184 629 00	184 729 00	184 829 00	510 H	51	1295,4	102
184 531 00	184 631 00	184 731 00	184 831 00	540 H	54	1371,6	108
184 533 00	184 633 00	184 733 00	184 833 00	570 H	57	1447,8	114
184 535 00	184 635 00	184 735 00	184 835 00	600 H	60	1524	120
184 537 00	184 637 00	184 737 00	184 837 00	630 H	63	1600,2	126
184 539 00	184 639 00	184 739 00	184 839 00	660 H	66	1676,4	132
184 541 00	184 641 00	184 741 00	184 841 00	700 H	70	1778	140
184 543 00	184 643 00	184 743 00	184 843 00	750 H	75	1905	150
184 545 00	184 645 00	184 745 00	184 845 00	800 H	80	2032	160
184 547 00	184 647 00	184 747 00	184 847 00	850 H	85	2159	170
184 550 00	184 650 00	184 750 00	184 850 00	900 H	90	2286	180
184 556 00	184 656 00	184 756 00	184 856 00	1000 H	100	2540	200
184 561 00	184 661 00	184 761 00	184 861 00	1100 H	110	2794	220
184 569 00	184 669 00	184 769 00	184 869 00	1250 H	125	3175	250
184 578 00	184 678 00	184 778 00	184 878 00	1400 H	140	3556	280
184 500 00	184 600 00	184 700 00	184 800 00	H	Open length		

The pitch XH and XXH are not listed above, but can be supplied on request.

Belts sold by the meter see page 172.
Performance figures see page 132.
Permissible tensile forces for the belts see page 129.

Tensioning Rollers and Tensioning Elements for Timing Belts

Tensioning rollers are used for tensioning on the outside of the belt (back of belt). The tensioning rollers can either be mounted rigidly or be combined with tensioning elements to make up an elastic belt tensioner.

Note: tensioning rollers mounted on the outside of the closed span, shorten the service life of the belt due to alternate bending conditions. This means that when an outside tensioning roller is mounted a corrective factor of at least 1.2 has to be used when calculating the drive. If the belt is tensioned from the inside, a toothed pulley must be used (pulley with ball bearing only made to order).



Tensioning Rollers

Material: Short roller made from high-grade industrial plastic.

Mounted on a suitable tensioning element, the tensioning roller becomes a ready-to-mount belt tensioner or on its own it can be used as idler. It runs on two permanently lubricated 2-Z ball bearings.

Tensioning element has to be ordered separately.

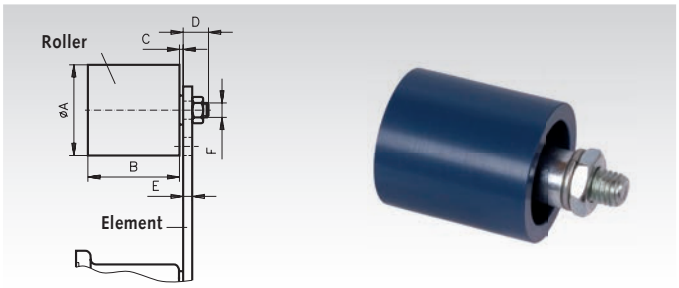

Product-No.	Diameter A mm	Product No. Tensioning Element matching	B mm	C mm	D mm	E max. mm	F mm	Weight kg
140 872 00	30	**140 800 00**	35	2	14	5	M8	0,08
140 874 00	40	**140 801 00**	45	6	16	7	M10	0,17
140 876 00	60	**140 803 00**	60	8	17	8	M12	0,40
140 878 00	80	**140 804 00**	90	8	25	10	M20	1,15

Tensioning Elements

Material: Lever made from St52, housing up to Ø 78 mm made from sintered steel, over Ø 78 mm made from grey cast iron GG20.
Tensioning elements are painted blue and are supplied with a zinc-plated screw and a spring washer.

These tensioning element can be used for tensioning all common kinds of chain and belt drives. The spring elements are based on highly-elastic natural rubber with a good shape memory and are designed for applications in temperatures from -40° to +80°C. Can be used for both tensioning directions.

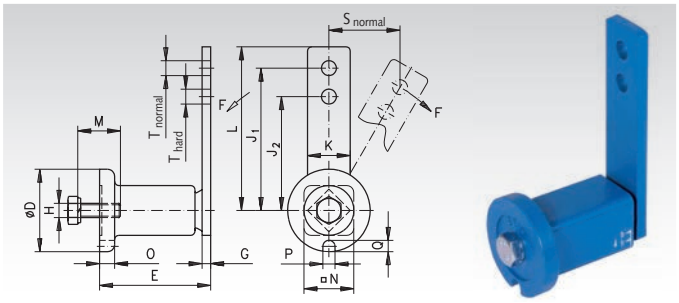

Product No.	Size	F max. normal N	F max. hard N	s max. normal mm	s max. hard mm	D mm	E mm	G mm	H mm	J_1 mm	J_2 mm	K mm	L mm	M mm	N mm	O mm	P mm	Q mm	T mm	M_A Nm	Weight kg
140 800 00	0	80	106	40	30	35	51 $^{+1,0}_{-0,5}$	5	M6	80	60	20	90	20	22	6	8	5	8,5	10	0,2
140 801 00	1	135	168	50	40	45	64 $^{+1,0}_{-0,5}$	5	M8	100	80	25	112,5	25	30	8	8,5	6	10,5	25	0,4
140 802 00	2	350	437	50	40	58	79 $^{+1,5}_{-0,5}$	7	M10	100	80	30	115	30	35	10,5	8,5	8	10,5	49	0,6
140 803 00	3	800	1040	65	50	78	108 $^{+2}_{-0,5}$	8	M12	130	100	50	155	40	52	15	10,5	10	12,5	86	1,7
140 804 00	4	1500	1875	87,5	70	95	140 $^{+2}_{-0,5}$	10	M16	175	140	60	205	40	66	15	12,5	12	20,5	210	3,55

Other tensioning element versions (stainless, zinc plated etc.) see page 116.

V-Belt Pulleys for Taper Bushes, 1 Groove

Material: cast iron EN-GJL200.

Taper V-belt pulleys similar to DIN 2211 or DIN 2217 matching narrow V-belts DIN 2215 und DIN 7753.

Design:
B = dished pulley
V = solid pulley

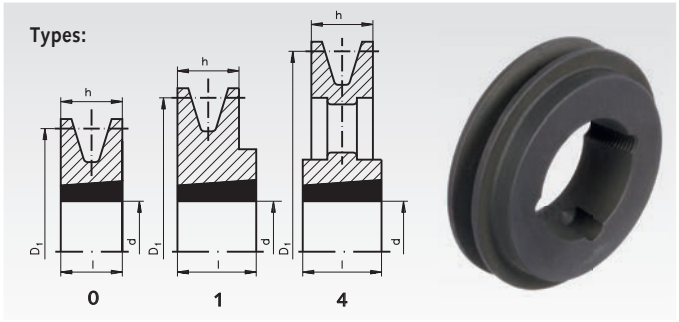

Ordering Details: e.g.: Product No. 151 106 00, V-Belt Pulley for Taper Clamping Bush, 1 Groove, Profile 10, Ø63 mm

Profile 10 and SPZ

Product No.	Nominal Ø D_1 mm	Design	Type	h mm	l mm	Relation of Hub to Rim	Bush* No.	Bore d mm	Weight approx. kg
151 106 00	63	V	1	16	22	one-sided projecting 6	1108	9 - 28	0,30
151 107 00	71	V	1	16	22	one-sided projecting 6	1108	9 - 28	0,40
151 108 00	80	V	1	16	25	one-sided projecting 9	1210	10 - 32	0,50
151 109 00	90	V	1	16	25	one-sided projecting 9	1210	10 - 32	0,70
151 110 00	100	V	1	16	25	one-sided projecting 9	1210	10 - 32	0,80
151 111 00	112	V	1	16	25	one-sided projecting 9	1610	12 - 42	1,00
151 112 00	125	V	1	16	25	one-sided projecting 9	1610	12 - 42	1,20
151 114 00	140	V	1	16	25	one-sided projecting 9	1610	12 - 42	1,60
151 116 00	160	V	1	16	25	one-sided projecting 9	1610	12 - 42	2,10
151 118 00	180	B	4	16	25	one-sided projecting 9	1610	12 - 42	1,80
151 120 00	200	B	4	16	32	one-sided projecting 16	2012	12 - 50	2,50
151 122 00	224	B	4	16	32	one-sided projecting 16	2012	12 - 50	2,80
151 125 00	250	B	4	16	32	projecting on both sides 8	2012	12 - 50	3,30
151 128 00	280	B	4	16	32	projecting on both sides 8	2012	12 - 50	3,80
151 131 00	315	B	4	16	32	projecting on both sides 8	2012	12 - 50	4,80

Profile 13 and SPA

Product No.	Nominal Ø D_1 mm	Design	Type	h mm	l mm	Relation of Hub to Rim	Bush* No.	Bore d mm	Weight approx. kg
153 107 00	71	V	1	20	22	one-sided projecting 2	1108	9 - 28	0,40
153 108 00	80	V	1	20	25	one-sided projecting 5	1210	10 - 32	0,53
153 109 00	90	V	1	20	25	one-sided projecting 5	1210	10 - 32	0,80
153 110 00	100	V	1	20	25	one-sided projecting 5	1610	12 - 42	0,90
153 111 00	112	V	1	20	25	one-sided projecting 5	1610	12 - 42	1,00
153 112 00	125	V	1	20	25	one-sided projecting 5	1610	12 - 42	1,30
153 114 00	140	V	1	20	25	one-sided projecting 5	1610	12 - 42	1,80
153 116 00	160	V	1	20	25	one-sided projecting 5	1610	12 - 42	2,20
153 118 00	180	B	4	20	25	one-sided projecting 5	1610	12 - 42	2,10
153 120 00	200	B	4	20	32	one-sided projecting 12	2012	12 - 50	2,80
153 122 00	224	B	4	20	32	one-sided projecting 12	2012	12 - 50	3,20
153 125 00	250	B	4	20	32	projecting on both sides 6	2012	12 - 50	3,70
153 128 00	280	B	4	20	32	one-sided projecting 12	2012	12 - 50	4,00
153 131 00	315	B	4	20	32	one-sided projecting 12	2012	12 - 50	4,60

Profile 17 and SPB

Product No.	Nominal Ø D_1 mm	Design	Type	h mm	l mm	Relation of Hub to Rim	Bush* No.	Bore d mm	Weight approx. kg
155 110 00	100	V	0	25	25	flush on both sides	1610	12 - 42	0,90
155 111 00	112	V	0	25	25	flush on both sides	1610	12 - 42	1,10
155 112 00	125	V	0	25	25	flush on both sides	1610	12 - 42	1,50
155 114 00	140	V	0	25	25	flush on both sides	1610	12 - 42	2,00
155 116 00	160	V	0	25	25	flush on both sides	1610	12 - 42	2,80
155 118 00	180	V	4	25	25	flush on both sides	1610	12 - 42	3,70
155 120 00	200	B	4	25	32	projecting on both sides 3.5	2012	12 - 50	4,10
155 122 00	224	B	4	25	32	projecting on both sides 3.5	2012	12 - 50	4,60
155 125 00	250	B	4	25	32	projecting on both sides 3.5	2012	12 - 50	5,60
155 128 00	280	B	4	25	32	projecting on both sides 3.5	2012	12 - 50	8,00



Matching Taper bushes see page 186.
Mounting instructions see page 824.

Other diameters or larger number of grooves at short notice, on request.

V-Belt Pulleys for Taper Bushes, 2 Grooves

Material: cast iron EN-GJL200.

Taper V-belt pulleys similar to DIN 2211 or DIN 2217 matching narrow V-belts DIN 2215 und DIN 7753.

Design:
A = spoked pulley
B = dished pulley
V = solid pulley

Types:

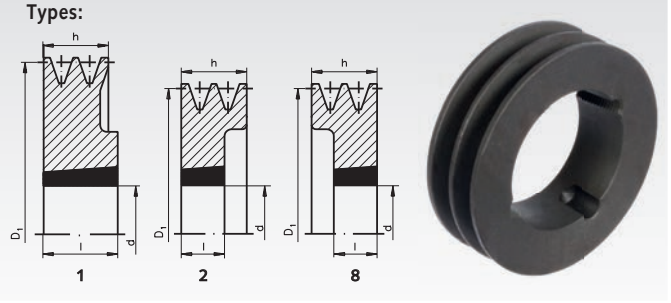

Ordering Details: e.g.: Product No. 151 206 00, V-Belt Pulley for Taper Clamping Bush, 2 Grooves, Profile 10, Ø63 mm

Profile 10 and SPZ

Product No.	Nominal Ø D_1 mm	Design	Type	h mm	l mm	Relation of Hub to Rim	Bush* No.	Bore d mm	Weight approx. kg
151 206 00	63	V	8	28	22	one-sided set back 6	1108	9 - 28	0,45
151 207 00	71	V	8	28	22	one-sided set back 6	1108	9 - 28	0,48
151 208 00	80	V	8	28	25	one-sided set back 3	1210	10 - 32	0,57
151 209 00	90	V	8	28	25	one-sided set back 3	1610	12 - 42	0,67
151 210 00	100	V	8	28	25	one-sided set back 3	1610	12 - 42	0,94
151 211 00	112	V	8	28	25	one-sided set back 3	1610	12 - 42	1,30
151 212 00	125	V	8	28	25	one-sided set back 3	1610	12 - 42	1,80
151 214 00	140	V	8	28	25	one-sided set back 3	1610	12 - 42	2,40
151 216 00	160	V	1	28	32	one-sided projecting 4	2012	12 - 50	3,10
151 218 00	180	B	1	28	32	one-sided projecting 4	2012	12 - 50	2,70
151 220 00	200	B	1	28	32	one-sided projecting 4	2012	12 - 50	3,10
151 222 00	224	B	1	28	32	one-sided projecting 4	2012	12 - 50	3,40
151 225 00	250	A	1	28	32	projecting on both sides 2	2012	12 - 50	3,90
151 228 00	280	A	1	28	32	projecting on both sides 2	2012	12 - 50	4,90

Profile 13 and SPA

Product No.	Nominal Ø D_1 mm	Design	Type	h mm	l mm	Relation of Hub to Rim	Bush* No.	Bore d mm	Weight approx. kg
153 207 00	71	V	8	35	22	one-sided set back 13	1108	9 - 28	0,55
153 208 00	80	V	8	35	25	one-sided set back 10	1210	10 - 32	0,74
153 209 00	90	V	8	35	25	one-sided set back 10	1610	12 - 42	0,90
153 210 00	100	V	8	35	25	one-sided set back 10	1610	12 - 42	1,00
153 211 00	112	V	8	35	25	one-sided set back 10	1610	12 - 42	1,40
153 212 00	125	V	8	35	25	one-sided set back 10	1610	12 - 42	1,90
153 214 00	140	V	8	35	32	one-sided set back 3	2012	12 - 50	2,60
153 216 00	160	V	8	35	32	one-sided set back 3	2012	12 - 50	3,20
153 218 00	180	B	1	35	32	set back on both sides 1.5	2012	12 - 50	5,20
153 220 00	200	B	1	35	45	projecting on both sides 5	2517	15 - 65	4,70
153 222 00	224	B	1	35	45	one-sided projecting 10	2517	15 - 65	5,30
153 225 00	250	B	1	35	45	projecting on both sides 5	2517	15 - 65	5,80
153 228 00	280	B	1	35	45	one-sided projecting 10	2517	15 - 65	6,50
153 231 00	315	B	1	35	45	one-sided projecting 10	2517	15 - 65	7,60

Profile 17 and SPB

Product No.	Nominal Ø D_1 mm	Design	Type	h mm	l mm	Relation of Hub to Rim	Bore d max. mm	Bush* No.	Weight approx. kg
155 210 00	100	V	8	44	25	one-sided set back 19	1610	12 - 42	1,2
155 211 00	112	V	8	44	25	one-sided set back 19	1610	12 - 42	1,5
155 212 00	125	V	2	44	32	one-sided set back 12	2012	12 - 50	2,0
155 214 00	140	V	2	44	32	one-sided set back 12	2012	12 - 50	2,7
155 216 00	160	V	8	44	32	one-sided set back 12	2012	12 - 50	3,9
155 218 00	180	V	1	44	45	one-sided projecting 1	2517	15 - 65	5,5
155 220 00	200	V	1	44	45	one-sided projecting 1	2517	15 - 65	7,5
155 222 00	224	B	1	44	45	one-sided projecting 1	2517	15 - 65	6,6
155 225 00	250	B	1	44	45	one-sided projecting 1	2517	15 - 65	7,7
155 228 00	280	B	1	44	45	one-sided projecting 1	2517	15 - 65	9,5
155 231 00	315	B	1	44	45	one-sided projecting 1	2517	1 - 65	11,5



Matching Taper bushes see page 186.
Mounting instructions see page 824.

Other diameters or larger number of grooves at short notice, on request.

V-Belt Pulleys for Taper Bushes, 3 Grooves

Material: cast iron EN-GJL200.

Taper V-belt pulleys similar to DIN 2211 or DIN 2217 matching narrow V-belts DIN 2215 und DIN 7753.

Design:
A = spoked pulley
B = dished pulley
V = solid pulley

Types:

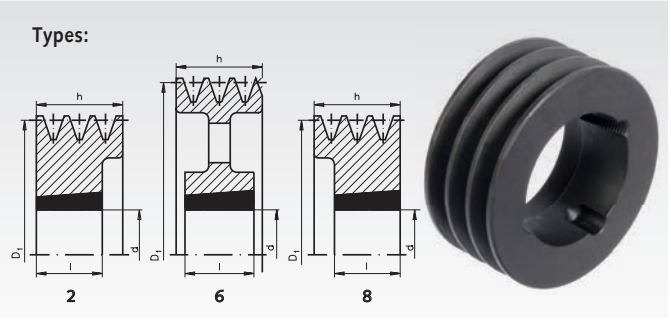

Ordering Details: e.g.: Product No. 151 306 00, V-Belt Pulley for Taper Clamping Bush, 3 Grooves, Profile 10, Ø63 mm

Profile 10 and SPZ

Product No.	Nominal Ø D_1 mm	Design	Type	h mm	l mm	Relation of Hub to Rim	Bush* No.	Bore d mm	Weight approx. kg
151 306 00	63	V	8	40	22	one-sided set back 18	1108	9 - 28	0,58
151 307 00	71	V	8	40	22	one-sided set back 18	1108	9 - 28	0,64
151 308 00	80	V	8	40	25	one-sided set back 15	1210	10 - 32	0,75
151 309 00	90	V	8	40	25	one-sided set back 15	1610	12 - 42	0,88
151 310 00	100	V	8	40	25	one-sided set back 15	1610	12 - 42	1,20
151 311 00	112	V	8	40	32	one-sided set back 8	2012	12 - 50	1,40
151 312 00	125	V	2	40	32	one-sided set back 8	2012	12 - 50	2,00
151 314 00	140	V	2	40	32	one-sided set back 8	2012	12 - 50	2,70
151 316 00	160	V	2	40	32	one-sided set back 8	2012	12 - 50	3,90
151 318 00	180	B	6	40	32	one-sided set back 8	2012	12 - 50	3,20
151 320 00	200	B	6	40	32	set back on both sides 4	2012	12 - 50	3,70
151 322 00	224	B	6	40	32	set back on both sides 4	2012	12 - 50	4,20
151 325 00	250	B	6	40	32	set back on both sides 4	2012	12 - 50	4,80
151 328 00	280	A	6	40	45	projecting on both sides 2.5	2517	15 - 65	7,10
151 331 00	315	A	6	40	45	projecting on both sides 2.5	2517	15 - 65	7,50

Profile 13 and SPA

Product No.	Nominal Ø D_1 mm	Design	Type	h mm	l mm	Relation of Hub to Rim	Bush* No.	Bore d mm	Weight approx. kg
153 308 00	80	V	8	50	25	one-sided set back 25	1210	10 - 32	0,8
153 309 00	90	V	8	50	25	one-sided set back 25	1610	12 - 42	1,0
153 310 00	100	V	2	50	25	one-sided set back 25	1610	12 - 42	1,4
153 311 00	112	V	8	50	32	one-sided set back 18	2012	12 - 50	1,6
153 312 00	125	V	2	50	32	one-sided set back 18	2012	12 - 50	2,3
153 314 00	140	V	8	50	45	one-sided set back 5	2517	15 - 65	2,9
153 316 00	160	V	8	50	45	one-sided set back 5	2517	15 - 65	3,8
153 318 00	180	V	8	50	45	one-sided set back 5	2517	15 - 65	6,1
153 320 00	200	B	6	50	45	set back on both sides 2.5	2517	15 - 65	5,5
153 322 00	224	B	6	50	45	set back on both sides 2.5	2517	15 - 65	6,2
153 325 00	250	B	6	50	45	set back on both sides 2.5	2517	15 - 65	6,8
153 328 00	280	B	6	50	45	set back on both sides 2.5	2517	15 - 65	7,6
153 331 00	315	A	6	50	51	projecting on both sides 0.5	3020	20 - 75	11,0

Profile 17 and SPB

Product No.	Nominal Ø D_1 mm	Design	Type	h mm	l mm	Relation of Hub to Rim	Bore d max. mm	Bush* No.	Weight approx. kg
155 310 00	100	V	8	63	25	one-sided set back 38	1610	12 - 42	1,7
155 311 00	112	V	8	63	25	one-sided set back 38	1610	12 - 42	2,0
155 312 00	125	V	2	63	32	one-sided set back 31	2012	12 - 50	2,7
155 314 00	140	V	2	63	32	one-sided set back 31	2012	12 - 50	3,5
155 316 00	160	V	2	63	45	one-sided set back 18	2517	15 - 65	4,8
155 318 00	180	V	2	63	45	one-sided set back 18	2517	15 - 65	6,6
155 320 00	200	V	2	63	45	one-sided set back 18	2517	15 - 65	8,6
155 322 00	224	B	6	63	45	one-sided set back 18	2517	15 - 65	8,1
155 325 00	250	B	6	63	51	one-sided set back 12	3020	20 - 75	11,0
155 328 00	280	B	6	63	51	set back on both sides 6	3020	20 - 75	13,0
155 331 00	315	B	6	63	51	set back on both sides 6	3020	20 - 75	15,5



Matching Taper bushes see page 186.
Mounting instructions see page 824.

Other diameters or larger number of grooves at short notice, on request.

Taper Bushes

Material: GG25.

Bores ISO E8, feather keyways in accordance with DIN 6885/1. Screws included in delivery.

Shaft tolerance +0.05/-0.125 mm.
Can be used with or without parallel key, depending on the required torque.

Other bush sizes and bores available at short notice (some in stock). Assembly instructions see page 824.

Ordering Details: e.g.: Product No. 622 501 09, Taper Bush 1008, 9 mm Bore

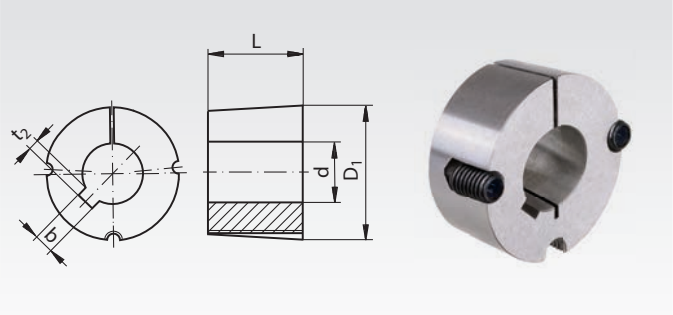

Product No.	Taper bush No.	Bore d mm	Keyway b mm	t_2 mm	L mm	D_1 mm	Weight kg
622 501 09	1008	9	3	1,4	22,3	35,2	0,175
622 501 10	1008	10	3	1,4	22,3	35,2	0,160
622 501 11	1008	11	4	1,8	22,3	35,2	0,140
622 501 12	1008	12	4	1,8	22,3	35,2	0,120
622 501 14	1008	14	5	2,3	22,3	35,2	0,118
622 501 15	1008	15	5	2,3	22,3	35,2	0,116
622 501 16	1008	16	5	2,3	22,3	35,2	0,112
622 501 18	1008	18	6	2,8	22,3	35,2	0,100
622 501 19	1008	19	6	2,8	22,3	35,2	0,098
622 501 20	1008	20	6	2,8	22,3	35,2	0,094
622 501 22	1008	22	6	2,8	22,3	35,2	0,080
622 501 24[1)]	1008	24	8	1,3[1)]	22,3	35,2	0,070
622 501 25[1)]	1008	25	8	1,3[1)]	22,3	35,2	0,068
622 502 09	1108	9	3	1,4	22,3	38,4	0,195
622 502 10	1108	10	3	1,4	22,3	38,4	0,180
622 502 11	1108	11	4	1,8	22,3	38,4	0,165
622 502 12	1108	12	4	1,8	22,3	38,4	0,154
622 502 14	1108	14	5	2,3	22,3	38,4	0,148
622 502 15	1108	15	5	2,3	22,3	38,4	0,145
622 502 16	1108	16	5	2,3	22,3	38,4	0,140
622 502 17	1108	17	5	2,3	22,3	38,4	0,136
622 502 18	1108	18	6	2,8	22,3	38,4	0,132
622 502 19	1108	19	6	2,8	22,3	38,4	0,126
622 502 20	1108	20	6	2,8	22,3	38,4	0,122
622 502 22	1108	22	6	2,8	22,3	38,4	0,112
622 502 24	1108	24	8	3,3	22,3	38,4	0,096
622 502 25	1108	25	8	3,3	22,3	38,4	0,092
622 502 28[1)]	1108	28	8	1,3[1)]	22,3	38,4	0,088
622 503 10	1210	10	3	1,4	25,4	47,5	0,282
622 503 11	1210	11	4	1,8	25,4	47,5	0,280
622 503 12	1210	12	4	1,8	25,4	47,5	0,278
622 503 14	1210	14	5	2,3	25,4	47,5	0,274
622 503 15	1210	15	5	2,3	25,4	47,5	0,267
622 503 16	1210	16	5	2,3	25,4	47,5	0,262
622 503 17	1210	17	5	2,3	25,4	47,5	0,257
622 503 18	1210	18	6	2,8	25,4	47,5	0,250
622 503 19	1210	19	6	2,8	25,4	47,5	0,244
622 503 20	1210	20	6	2,8	25,4	47,5	0,240
622 503 22	1210	22	6	2,8	25,4	47,5	0,224
622 503 24	1210	24	8	3,3	25,4	47,5	0,208
622 503 25	1210	25	8	3,3	25,4	47,5	0,198
622 503 28	1210	28	8	3,3	25,4	47,5	0,184
622 503 30	1210	30	8	3,3	25,4	47,5	0,168
622 503 32	1210	32	10	3,3	25,4	47,5	0,160
622 513 14	1215	14	5	2,3	38,1	47,5	0,380
622 513 16	1215	16	5	2,3	38,1	47,5	0,370
622 513 18	1215	18	6	2,8	38,1	47,5	0,350
622 513 19	1215	19	6	2,8	38,1	47,5	0,340
622 513 20	1215	20	6	2,8	38,1	47,5	0,335
622 513 22	1215	22	6	2,8	38,1	47,5	0,320
622 513 24	1215	24	8	3,3	38,1	47,5	0,290
622 513 25	1215	25	8	3,3	38,1	47,5	0,285
622 513 28	1215	28	8	3,3	38,1	47,5	0,260
622 513 30	1215	30	8	3,3	38,1	47,5	0,230
622 513 32	1215	32	10	3,3	38,1	47,5	0,200

Product No.	Taper bush No.	Bore d mm	Keyway b mm	t_2 mm	L mm	D_1 mm	Weight kg
622 504 12	1610	12	4	1,8	25,4	57	0,416
622 504 14	1610	14	5	2,3	25,4	57	0,412
622 504 15	1610	15	5	2,3	25,4	57	0,408
622 504 16	1610	16	5	2,3	25,4	57	0,402
622 504 17	1610	17	5	2,3	25,4	57	0,397
622 504 18	1610	18	6	2,8	25,4	57	0,390
622 504 19	1610	19	6	2,8	25,4	57	0,380
622 504 20	1610	20	6	2,8	25,4	57	0,373
622 504 22	1610	22	6	2,8	25,4	57	0,366
622 504 24	1610	24	8	3,3	25,4	57	0,356
622 504 25	1610	25	8	3,3	25,4	57	0,348
622 504 28	1610	28	8	3,3	25,4	57	0,324
622 504 30	1610	30	8	3,3	25,4	57	0,304
622 504 32	1610	32	10	3,3	25,4	57	0,280
622 504 35	1610	35	10	3,3	25,4	57	0,264
622 504 38	1610	38	10	3,3	25,4	57	0,240
622 504 40	1610	40	12	3,3	25,4	57	0,210
622 504 42	1610	42	12	3,3	25,4	57	0,200
622 508 12	1615	12	4	1,8	38,1	57	0,590
622 508 14	1615	14	5	2,3	38,1	57	0,580
622 508 15	1615	15	5	2,3	38,1	57	0,580
622 508 16	1615	16	5	2,3	38,1	57	0,580
622 508 18	1615	18	6	2,8	38,1	57	0,561
622 508 19	1615	19	6	2,8	38,1	57	0,557
622 508 20	1615	20	6	2,8	38,1	57	0,552
622 508 22	1615	22	6	2,8	38,1	57	0,540
622 508 24	1615	24	8	3,3	38,1	57	0,520
622 508 25	1615	25	8	3,3	38,1	57	0,510
622 508 28	1615	28	8	3,3	38,1	57	0,470
622 508 30	1615	30	8	3,3	38,1	57	0,446
622 508 32	1615	32	10	3,3	38,1	57	0,414
622 508 35	1615	35	10	3,3	38,1	57	0,380
622 508 38	1615	38	10	3,3	38,1	57	0,346
622 508 40	1615	40	12	3,3	38,1	57	0,340
622 508 42[1)]	1615	42	12	2,2[1)]	38,1	57	0,260
622 505 12	2012	12	4	1,8	31,8	70	0,810
622 505 14	2012	14	5	2,3	31,8	70	0,800
622 505 15	2012	15	5	2,3	31,8	70	0,785
622 505 16	2012	16	5	2,3	31,8	70	0,770
622 505 18	2012	18	6	2,8	31,8	70	0,762
622 505 19	2012	19	6	2,8	31,8	70	0,756
622 505 20	2012	20	6	2,8	31,8	70	0,750
622 505 22	2012	22	6	2,8	31,8	70	0,736
622 505 24	2012	24	8	3,3	31,8	70	0,724
622 505 25	2012	25	8	3,3	31,8	70	0,714
622 505 28	2012	28	8	3,3	31,8	70	0,684
622 505 30	2012	30	8	3,3	31,8	70	0,658
622 505 32	2012	32	10	3,3	31,8	70	0,630
622 505 35	2012	35	10	3,3	31,8	70	0,604
622 505 38	2012	38	10	3,3	31,8	70	0,566
622 505 40	2012	40	12	3,3	31,8	70	0,538
622 505 42	2012	42	12	3,3	31,8	70	0,510
622 505 45	2012	45	14	3,8	31,8	70	0,460
622 505 48	2012	48	14	3,8	31,8	70	0,404
622 505 50	2012	50	14	3,8	31,8	70	0,372

[1)] With flat keyway.

Taper Bushes

Material: GG25.
Bores ISO E8, feather keyways in accordance with DIN 6885/1.
Screws included in delivery. From size 3525 with three screws.

Shaft tolerance +0.05/-0.125 mm.
Can be used with or without parallel key, depending on the required torque.

Other bush sizes and bores available at short notice (some in stock). Assembly instructions see page 824.

Ordering Details: e.g.: Product No. 622 506 15, Taper Bush 2517, 15 mm Bore

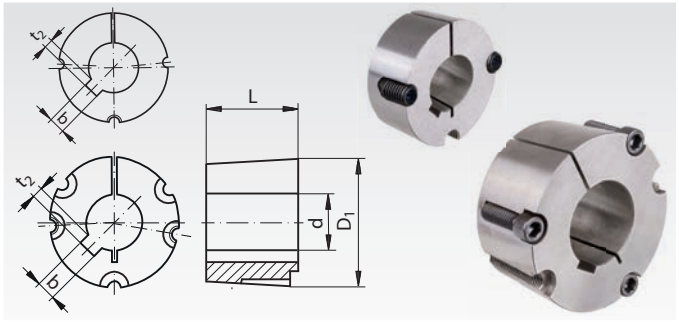

Product No.	Taper bush No.	Bore d mm	Keyway b mm	t_2 mm	L mm	D_1 mm	Weight kg
622 506 15	2517	15	5	2,3	44,5	85,5	1,85
622 506 16	2517	16	5	2,3	44,5	85,5	1,80
622 506 18	2517	18	6	2,8	44,5	85,5	1,70
622 506 19	2517	19	6	2,8	44,5	85,5	1,62
622 506 20	2517	20	6	2,8	44,5	85,5	1,60
622 506 22	2517	22	6	2,8	44,5	85,5	1,57
622 506 24	2517	24	8	3,3	44,5	85,5	1,57
622 506 25	2517	25	8	3,3	44,5	85,5	1,56
622 506 28	2517	28	8	3,3	44,5	85,5	1,52
622 506 30	2517	30	8	3,3	44,5	85,5	1,49
622 506 32	2517	32	10	3,3	44,5	85,5	1,45
622 506 35	2517	35	10	3,3	44,5	85,5	1,40
622 506 38	2517	38	10	3,3	44,5	85,5	1,35
622 506 40	2517	40	12	3,3	44,5	85,5	1,32
622 506 42	2517	42	12	3,3	44,5	85,5	1,27
622 506 45	2517	45	14	3,8	44,5	85,5	1,20
622 506 48	2517	48	14	3,8	44,5	85,5	1,13
622 506 50	2517	50	14	3,8	44,5	85,5	1,08
622 506 55	2517	55	16	4,3	44,5	85,5	0,96
622 506 60	2517	60	18	4,4	44,5	85,5	0,81
622 506 65[1)]	2517	65	18	3,4[1)]	44,5	85,5	0,65
622 507 20	3020	20	6	2,8	50,8	108	3,00
622 507 25	3020	25	8	3,3	50,8	108	2,91
622 507 28	3020	28	8	3,3	50,8	108	2,79
622 507 30	3020	30	8	3,3	50,8	108	2,84
622 507 32	3020	32	10	3,3	50,8	108	2,80
622 507 35	3020	35	10	3,3	50,8	108	2,75
622 507 38	3020	38	10	3,3	50,8	108	2,70
622 507 40	3020	40	12	3,3	50,8	108	2,64
622 507 42	3020	42	12	3,3	50,8	108	2,59
622 507 45	3020	45	14	3,8	50,8	108	2,52
622 507 48	3020	48	14	3,8	50,8	108	2,43
622 507 50	3020	50	14	3,8	50,8	108	2,37
622 507 55	3020	55	16	4,3	50,8	108	2,23
622 507 60	3020	60	18	4,4	50,8	108	2,00
622 507 65	3020	65	18	4,4	50,8	108	1,89
622 507 70	3020	70	20	4,9	50,8	108	1,70
622 507 75	3020	75	20	4,9	50,8	108	1,49
622 511 30	3030	30	8	3,3	76,2	108	4,05
622 511 35	3030	35	10	3,3	76,2	108	3,95
622 511 38	3030	38	10	3,3	76,2	108	3,86
622 511 40	3030	40	12	3,3	76,2	108	3,82
622 511 42	3030	42	12	3,3	76,2	108	3,69
622 511 45	3030	45	14	3,8	76,2	108	3,55
622 511 48	3030	48	14	3,8	76,2	108	3,45
622 511 50	3030	50	14	3,8	76,2	108	3,42
622 511 55	3030	55	16	4,3	76,2	108	3,18
622 511 60	3030	60	18	4,4	76,2	108	2,95
622 511 65	3030	65	18	4,4	76,2	108	2,68
622 511 70	3030	70	20	4,9	76,2	108	2,06
622 511 75	3030	75	20	4,9	76,2	108	1,64

[1)] With flat keyway.

Product No.	Taper bush No.	Bore d mm	Keyway b mm	t_2 mm	L mm	D_1 mm	Weight kg
622 509 35	3525	35	10	3,3	63,5	127	4,91
622 509 38	3525	38	10	3,3	63,5	127	4,85
622 509 40	3525	40	12	3,3	63,5	127	4,80
622 509 42	3525	42	12	3,3	63,5	127	4,71
622 509 45	3525	45	14	3,8	63,5	127	4,67
622 509 48	3525	48	14	3,8	63,5	127	4,55
622 509 50	3525	50	14	3,8	63,5	127	4,44
622 509 55	3525	55	16	4,3	63,5	127	4,29
622 509 60	3525	60	18	4,4	63,5	127	4,05
622 509 65	3525	65	18	4,4	63,5	127	3,88
622 509 70	3525	70	20	4,9	63,5	127	3,58
622 509 75	3525	75	20	4,9	63,5	127	3,37
622 509 80	3525	80	22	5,4	63,5	127	3,05
622 509 85	3525	85	22	5,4	63,5	127	2,77
622 509 90	3525	90	25	5,4	63,5	127	2,47
622 510 30	3535	30	8	3,3	89,0	127	6,95
622 510 35	3535	35	10	3,3	89,0	127	6,70
622 510 38	3535	38	10	3,3	89,0	127	6,53
622 510 40	3535	40	12	3,3	89,0	127	6,48
622 510 42	3535	42	12	3,3	89,0	127	6,40
622 510 45	3535	45	14	3,8	89,0	127	6,25
622 510 48	3535	48	14	3,8	89,0	127	6,17
622 510 50	3535	50	14	3,8	89,0	127	6,05
622 510 55	3535	55	16	4,3	89,0	127	5,81
622 510 60	3535	60	18	4,4	89,0	127	5,50
622 510 65	3535	65	18	4,4	89,0	127	5,20
622 510 70	3535	70	20	4,9	89,0	127	4,88
622 510 75	3535	75	20	4,9	89,0	127	4,46
622 510 80	3535	80	22	5,4	89,0	127	4,08
622 510 85	3535	85	22	5,4	89,0	127	3,67
622 510 90	3535	90	25	5,4	89,0	127	3,21
622 512 40	4030	40	12	3,3	76,2	146	8,92
622 512 42	4030	42	12	3,3	76,2	146	8,80
622 512 45	4030	45	14	3,8	76,2	146	8,67
622 512 48	4030	48	14	3,8	76,2	146	8,49
622 512 50	4030	50	14	3,8	76,2	146	8,33
622 512 55	4030	55	16	4,3	76,2	146	8,15
622 512 60	4030	60	18	4,4	76,2	146	7,85
622 512 65	4030	65	18	4,4	76,2	146	7,60
622 512 70	4030	70	20	4,9	76,2	146	7,18
622 512 75	4030	75	20	4,9	76,2	146	6,84
622 512 80	4030	80	22	5,4	76,2	146	6,46
622 512 85	4030	85	22	5,4	76,2	146	6,06
622 512 90	4030	90	25	5,4	76,2	146	5,59
622 512 91	4030	100	28	6,4	76,2	146	4,63
622 514 40	4040	40	12	3,3	102,0	146	10,19
622 514 42	4040	42	12	3,3	102,0	146	10,03
622 514 45	4040	45	14	3,8	102,0	146	9,86
622 514 48	4040	48	14	3,8	102,0	146	9,66
622 514 50	4040	50	14	3,8	102,0	146	9,48
622 514 55	4040	55	16	4,3	102,0	146	9,27
622 514 60	4040	60	18	4,4	102,0	146	8,93
622 514 65	4040	65	18	4,4	102,0	146	8,65
622 514 70	4040	70	20	4,9	102,0	146	8,17
622 514 75	4040	75	20	4,9	102,0	146	7,78
622 514 80	4040	80	22	5,4	102,0	146	7,35
622 514 85	4040	85	22	5,4	102,0	146	6,89
622 514 90	4040	90	25	5,4	102,0	146	6,36
622 514 95	4040	95	25	5,4	102,0	146	5,94
622 514 91	4040	100	28	6,4	102,0	146	5,27

V-Belt Pulleys Made from a Special Light Alloy with Cast-Iron core, 1 Groove

Bimetal V-belt pulleys similar to DIN 2211 or DIN 2217 matching narrow V-belts DIN 2215 und DIN 7753.

V-pelt pulleys with nominal diameters up to and including 250 mm
are supplied as solid pulley, from 280 mm Ø as spoked pulley.

[1] Can only be used with standard V-belt DIN 2215 .
* Without cast-iron core.

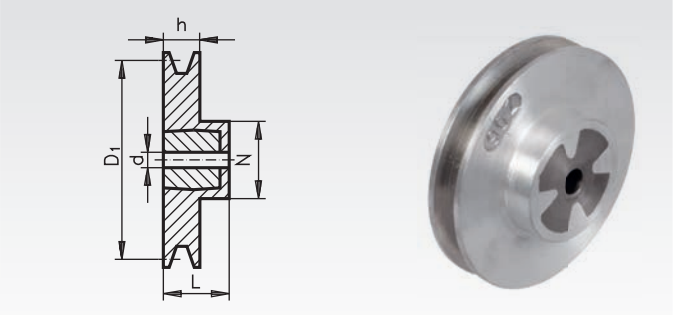

**Ordering Details: e.g.: Product No. 150 101 00,
V-Belt Pulley Bi-metal, 1 Groove, 40/1/10**

Profile Z (10) and SPZ with 1 Groove, Rim Width h 16 mm

Product No.	Nominal Ø D_1 mm	Pilot Hole d approx. mm	max. Bore mm	Hub Ø N approx. mm	Hub Length L approx. mm	Weight approx. kg
150 102 00	*50 [1]	-	22	35	28	0,1
150 103 00	*56 [1]	-	22	35	28	0,1
150 106 00	*63	-	22	35	28	0,1
150 107 00	*71	-	25	40	28	0,2
150 108 00	80	10	28	48	28	0,4
150 109 00	90	10	28	48	28	0,5
150 110 00	100	10	28	48	28	0,5
150 111 00	112	10	28	48	28	0,5
150 112 00	125	10	28	48	28	0,5
150 114 00	140	10	28	48	28	0,6
150 116 00	160	12	35	60	32	0,9
150 118 00	180	12	35	60	32	1,0
150 120 00	200	12	35	60	32	1,1
150 122 00	224	12	35	60	32	1,2
150 125 00	250	12	35	60	32	1,5
150 128 00	280	12	35	60	40	1,7
150 131 00	315	14	40	65	40	2,0

Profile A (13) and SPA with 1 Groove, Rim Width h 20 mm

Product No.	Nominal Ø D_1 mm	Pilot Hole d approx. mm	max. Bore mm	Hub Ø N approx. mm	Hub Length L approx. mm	Weight approx. kg
152 102 00	*50 [1]	-	22	35	28	0,1
152 103 00	*56 [1]	-	22	35	28	0,15
152 106 00	*63	-	25	40	28	0,15
152 107 00	*71	-	25	40	28	0,2
152 108 00	80	10	28	48	28	0,4
152 109 00	90	10	28	48	28	0,5
152 110 00	100	10	28	48	28	0,5
152 111 00	112	10	28	48	28	0,5
152 112 00	125	10	35	60	32	0,7
152 114 00	140	10	35	60	32	0,8
152 116 00	160	12	35	60	40	1,0
152 118 00	180	12	40	65	40	1,3
152 120 00	200	12	40	65	40	1,4
152 122 00	224	12	40	65	40	1,5
152 125 00	250	12	45	75	50	2,2
152 128 00	280	12	45	75	50	2,4
152 131 00	315	12	45	75	50	2,8

V-Belt Pulleys GG in Taper bushes-Type see page 183.

Profile B (17) and SPB with 1 Groove, Rim Width h 25 mm

Product No.	Nominal Ø D_1 mm	Pilot Hole d approx. mm	max. Bore mm	Hub Ø N approx. mm	Hub Length L approx. mm	Weight approx. kg
154 106 00	*63 [1]	-	25	40	32	0,2
154 107 00	*71	-	25	40	32	0,25
154 108 00	80	10	35	60	32	0,5
154 109 00	90	10	35	60	32	0,6
154 110 00	100	12	35	60	32	0,7
154 111 00	112	12	35	60	32	0,7
154 112 00	125	12	35	60	32	0,8
154 114 00	140	12	35	60	32	0,9
154 116 00	160	12	35	60	40	1,1
154 118 00	180	12	40	65	40	1,4
154 120 00	200	12	40	65	40	1,5
154 122 00	224	12	40	65	45	1,9
154 125 00	250	12	45	75	45	2,3
154 128 00	280	14	45	75	45	2,4
154 131 00	315	20	45	75	45	2,7



Reworking within 24h-service possible. Custom made parts on request.

V-Belt Pulleys Made from a Special Light Alloy with Cast-Iron core, 2 Grooves

Bimetal V-belt pulleys similar to DIN 2211 or DIN 2217 matching narrow V-belts DIN 2215 und DIN 7753.

V-belt pulleys with nominal diameters up to and including 250 mm are supplied as solid pulley, from 280 mm Ø as spoked pulley.

[1] Can only be used with standard V-belt DIN 2215 .
* Without cast-iron core.

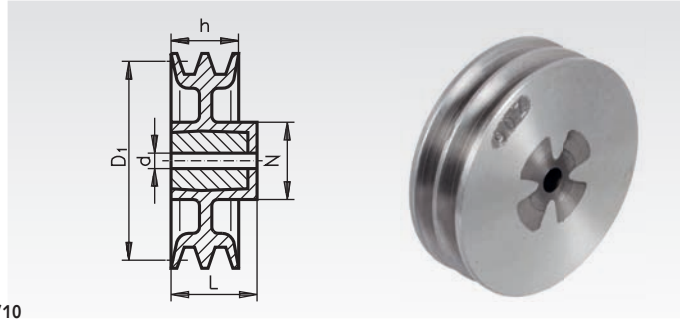

Ordering Details: e.g.: Product No. 150 202 00, V-Belt Pulley Bi-metal, 2 Grooves, 50/2/10

Profile Z (10) and SPZ with 2 Grooves, Rim Width h 28 mm

Product No.	Nominal Ø D_1 mm	Pilot Hole d approx. mm	max. Bore mm	Hub Ø N approx. mm	Hub Length L approx. mm	Weight approx. kg
150 202 00	*50 [1]	-	22	35	35	0,15
150 203 00	*56 [1]	-	22	35	35	0,15
150 206 00	*63	-	25	40	35	0,2
150 207 00	*71	-	25	40	35	0,3
150 208 00	80	10	28	-	28	0,5
150 209 00	90	10	28	-	28	0,6
150 210 00	100	10	28	-	28	0,7
150 211 00	112	10	35	60	32	0,8
150 212 00	125	10	35	60	32	0,8
150 214 00	140	12	35	60	40	1,0
150 216 00	160	12	35	60	40	1,2
150 218 00	180	12	40	65	40	1,5
150 220 00	200	12	40	65	40	1,6
150 222 00	224	12	40	65	40	1,7
150 225 00	250	12	40	65	40	2,1
150 228 00	280	12	40	65	45	2,4
150 231 00	315	14	45	75	45	2,7

Profile A (13) and SPA with 2 Grooves, Rim Width h 35 mm

Product No.	Nominal Ø D_1 mm	Pilot Hole d approx. mm	max. Bore mm	Hub Ø N approx. mm	Hub Length L approx. mm	Weight approx. kg
152 202 00	*50 [1]	-	22	-	35	0,15
152 203 00	*56 [1]	-	22	-	35	0,2
152 206 00	*63	-	25	40	45	0,25
152 207 00	*71	-	28	48	45	0,35
152 208 00	80	10	35	60	45	0,7
152 209 00	90	10	35	60	45	0,8
152 210 00	100	10	35	60	45	0,9
152 211 00	112	12	35	60	45	1,0
152 212 00	125	12	35	60	45	1,0
152 214 00	140	12	35	60	45	1,2
152 216 00	160	12	40	65	45	1,5
152 218 00	180	12	40	65	45	1,7
152 220 00	200	12	40	65	50	1,9
152 222 00	224	12	40	65	50	2,2
152 225 00	250	14	45	75	50	2,8
152 228 00	280	14	45	75	50	2,9
152 231 00	315	14	45	75	50	3,2

V-Belt Pulleys GG in Taper bushes-Type see page 183.

Profile B (17) and SPB with 2 Grooves, Rim Width h 44 mm

Product No.	Nominal Ø D_1 mm	Pilot Hole d approx. mm	max. Bore mm	Hub Ø N approx. mm	Hub Length L approx. mm	Weight approx. kg
154 207 00	*71	-	28	48	44	0,4
154 208 00	80	10	35	60	44	0,7
154 209 00	90	12	35	60	44	0,8
154 210 00	100	12	40	65	44	1,1
154 211 00	112	12	40	65	44	1,3
154 212 00	125	12	40	65	44	1,4
154 214 00	140	12	40	65	44	1,4
154 216 00	160	12	45	75	44	2,0
154 218 00	180	12	45	75	50	2,2
154 220 00	200	14	45	75	50	2,4
154 222 00	224	14	45	75	50	2,8
154 225 00	250	16	45	75	50	2,9
154 228 00	280	16	50	85	50	3,5
154 231 00	315	20	50	85	60	4,3



Reworking within 24h-service possible. Custom made parts on request.

V-Belt Pulley Made from a Special Light Alloy with Cast-Iron core, 3 Grooves

Bimetal V-belt pulleys similar to DIN 2211 or DIN 2217 matching narrow V-belts DIN 2215 und DIN 7753.

V-belt pulleys with nominal diameters up to and including 250 mm are supplied as solid pulley, from 280 mm Ø as spoked pulley.

[1] Can only be used with standard V-belt DIN 2215 .
* Without cast-iron core.

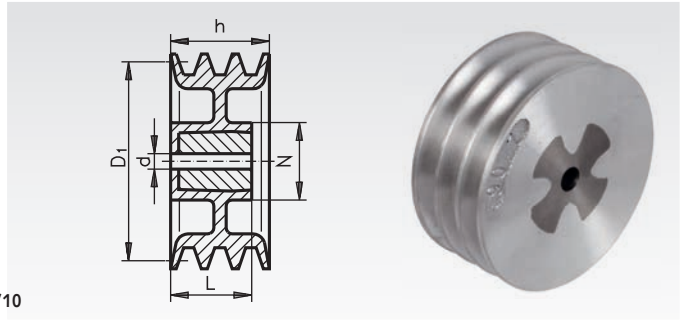

Ordering Details: e.g.: Product No. 150 306 00, V-Belt Pulley Bi-metal, 3 Grooves, 63/3/10

Profile Z (10) and SPZ with 3 Grooves, Rim Width h 40 mm

Product No.	Nominal Ø D_1 mm	Pilot Hole d approx. mm	max. Bore mm	Hub Ø N approx. mm	Hub Length L approx. mm	Weight kg
150 306 00	*63	-	25	-	40	0,3
150 307 00	*71	-	30	-	40	0,4
150 308 00	80	10	35	-	40	0,8
150 309 00	90	10	35	-	40	0,9
150 310 00	100	10	35	60	40	1,0
150 311 00	112	12	35	-	40	1,2
150 312 00	125	12	35	60	40	1,1
150 314 00	140	12	40	65	40	1,5
150 316 00	160	12	40	65	45	1,5
150 318 00	180	12	45	75	45	2,0
150 320 00	200	14	45	75	45	2,2
150 322 00	224	14	45	75	45	2,4
150 325 00	250	14	45	75	45	2,7
150 328 00	280	14	45	75	50	3,0
150 331 00	315	14	45	75	50	4,0

Profile A (13) and SPA with 3 Grooves, Rim Width h 50 mm

Product No.	Nominal Ø D_1 mm	Pilot Hole d approx. mm	max. Bore mm	Hub Ø N approx. mm	Hub Length L approx. mm	Weight kg
152 302 00	*50 [1]	-	22	-	50	0,2
152 303 00	*56 [1]	-	25	-	50	0,3
152 306 00	*63	-	25	-	50	0,3
152 307 00	*71	-	30	-	50	0,4
152 308 00	80	12	35	-	50	0,8
152 309 00	90	12	40	-	50	1,1
152 310 00	100	12	40	-	50	1,3
152 311 00	112	12	40	-	50	1,5
152 312 00	125	12	40	65	50	1,8
152 314 00	140	12	40	65	50	1,7
152 316 00	160	12	40	65	50	1,9
152 318 00	180	14	45	75	50	2,4
152 320 00	200	14	45	75	50	2,6
152 322 00	224	16	45	75	50	2,8
152 325 00	250	16	50	85	50	3,5
152 328 00	280	16	50	85	50	3,6
152 331 00	315	16	50	85	60	4,5

V-Belt Pulleys GG in Taper bushes-Type see page 183.

Profile B (17) and SPB with 3 Grooves, Rim Width h 63 mm

Product No.	Nominal Ø D_1 mm	Pilot Hole d approx. mm	max. Bore mm	Hub Ø N approx. mm	Hub Length L approx. mm	Weight kg
154 308 00	80	12	35	-	63	0,9
154 309 00	90	12	35	-	63	1,2
154 310 00	100	14	40	-	63	1,4
154 311 00	112	14	40	-	63	2,0
154 312 00	125	14	40	-	63	2,3
154 314 00	140	14	45	-	63	2,4
154 316 00	160	14	50	85	50	2,6
154 318 00	180	14	50	85	50	2,8
154 320 00	200	16	50	85	50	3,0
154 322 00	224	16	50	85	50	3,4
154 325 00	250	18	50	85	60	4,3
154 328 00	280	18	50	85	60	4,6
154 331 00	315	20	50	85	60	4,9



Reworking within 24h-service possible. Custom made parts on request.

V-Belt Tensioner with Mounted V-Belt Pulley

Material: Housings up to Ø 78 mm made from sintered steel, over Ø 78 mm made from grey cast iron GG20.
Lever St52, V-belt pulley cast steel.

Matching narrow V-belts DIN 2215 und DIN 7753.

Pulley with sealed ball bearings, permanently lubricated.

Measur A of the pulley can be adjusted by distance-washers on the axis, which is screwed onto the tensioner.

Can be used for both tensioning directions.

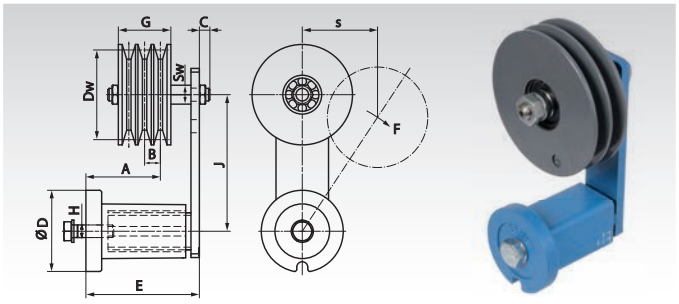

Ordering Details: e.g.: Product No. 140 850 01, SPZ, 1 Groove, Dw=90mm

Product No.	Profile	No. of Grooves	Dw mm	Tensioner Size	$F_{max.}$ N	$Speed_{max.}$ min^{-1}	$s_{max.}$ mm	A mm	B mm	C mm	Ø D mm	E mm	J mm	G mm	H mm	sw mm	Weight kg
140 851 01	SPZ (10)	1	90	2	350	10000	50	20-43	12	13	58	79	100	16	M10	19	2,0
140 851 02	SPZ (10)	2	90	2	350	10000	50	31-48	12	13	58	79	100	28	M10	19	2,3
140 851 03	SPZ (10)	3	90	2	350	10000	50	31-37	12	13	58	79	100	40	M10	19	2,6
140 851 11	SPA (13)	1	90	2	350	7400	50	15-36	15	19	58	79	100	20	M10	27	2,0
140 851 12	SPA (13)	2	90	2	350	7400	50	20-42	15	19	58	79	100	35	M10	27	2,3
140 852 01	SPA (13)	1	90	3	800	7400	65	34-64	15	19	78	108	130	20	M12	27	3,1
140 852 02	SPA (13)	2	90	3	800	7400	65	49-70	15	19	78	108	130	35	M12	27	3,5
140 852 03	SPA (13)	3	90	3	800	7400	65	49-70	15	19	78	108	130	50	M12	27	3,8
140 852 04	SPA (13)	1	125	3	800	5300	65	33-63	15	19	78	108	130	20	M12	27	3,9
140 852 05	SPA (13)	2	125	3	800	5300	65	49-70	15	19	78	108	130	35	M12	27	4,8
140 854 01	SPB (17)	1	125	3	800	5300	65	35-65	19	19	78	108	130	25	M12	27	4,2
140 854 02	SPB (17)	2	125	3	800	5300	65	48-69	19	19	78	108	130	44	M12	27	5,3
140 854 03	SPB (17)	3	125	4	1500	5300	87,5	104-107	19	17	95	140	175	63	M16	27	7,9
140 854 04	SPB (17)	3	140	4	1500	4000	87,5	104-107	19	17	95	140	175	63	M16	27	9,2

Tensioning Rollers

Material: Short roller made from high-grade industrial plastic.

Tensioning rollers are used for tensioning (or as an idler) on the outside of the belt (back of belt). The tensioning rollers can either be mounted rigidly or be combined with tensioning elements to make up an elastic belt tensioner.

It runs on two permanently lubricated 2-Z ball bearings.

Tensioning element has to be ordered separately.

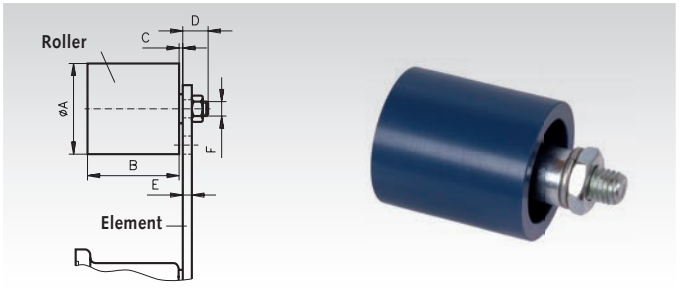

Ordering Details: e.g.: Product No. 140 872 00, Tensioning Roller Ø 30 mm

Product-No.	Diameter A mm	Product No. Tensioning Element matching	B mm	C mm	D mm	E max. mm	F mm	Weight kg
140 872 00	30	**140 800 00**	35	2	14	5	M8	0,08
140 874 00	40	**140 801 00**	45	6	16	7	M10	0,17
140 876 00	60	**140 803 00**	60	8	17	8	M12	0,40
140 878 00	80	**140 804 00**	90	8	25	10	M20	1,15

Tensioning Elements in Standard Version

Material: Housing up to Ø 78 mm made from sintered steel, over Ø 78 mm made from grey cast iron GG20, lever made from St52.
Can be used for tensioning all common kinds of chain and belt drives. The elastomeric inserts are based on highly-elastic natural rubber with a good shape memory and are designed for applications in temperatures from -40° to +80°C
The tensioning elements are painted blue and supplied with a zinc-plated screw and spring washer. Can be used for both tensioning directions. Temperature range: -40° to +80°C.

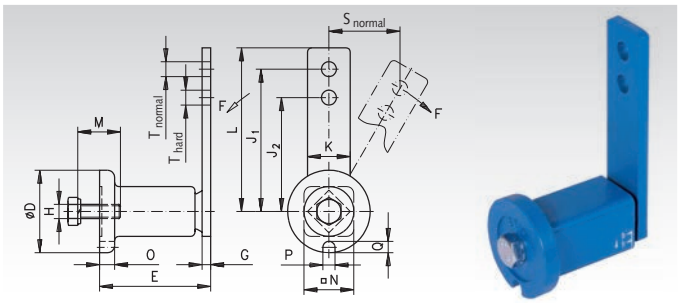

Ordering Details: e.g.: Product No. 140 800 00, Tensioning Element Ø 35 mm

Product No.	Size	F max. normal N	F max. hard N	s max. normal mm	s max. hard mm	D mm	E mm	G mm	H mm	J_1 mm	J_2 mm	K mm	L mm	M mm	N mm	O mm	P mm	Q mm	T mm	M_A Nm	Weight kg
140 800 00	0	80	106	40	30	35	51 $^{+1,0}_{-0,5}$	5	M6	80	60	20	90	20	22	6	8	5	8,5	10	0,2
140 801 00	1	135	168	50	40	45	64 $^{+1,0}_{-0,5}$	5	M8	100	80	25	112,5	25	30	8	8,5	6	10,5	25	0,4
140 802 00	2	350	437	50	40	58	79 $^{+1,5}_{-0,5}$	7	M10	100	80	30	115	30	35	10,5	8,5	8	10,5	49	0,6
140 803 00	3	800	1040	65	50	78	108 $^{+2}_{-0,5}$	8	M12	130	100	50	155	40	52	15	10,5	10	12,5	86	1,7
140 804 00	4	1500	1875	87,5	70	95	140 $^{+2}_{-0,5}$	10	M16	175	140	60	205	40	66	15	12,5	12	20,5	210	3,55

V-Belts DIN 7753

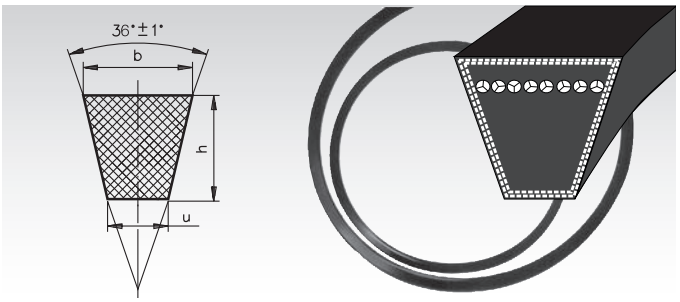

Dimensions in mm/wedge angle approx. 36°

Standard Size	SPZ	SPA
Width b	9.7	12.7
Height h	8	10
Width u	4.2	5.8
Smallest medium pulley diameter	63	90

Conversion table for Outside (L_A) and Reference Length (L_R).

Standard Size	SPZ	SPA
$L_A = L_R$ + mm	13	18

Ordering Details: e.g.: Product No. 150 816 00, V-Belt Profile SPZ, L_R 630 mm

Profile SPZ (9.7)		Profile SPA (12.7)	
Product No.	Reference Length (L_R) mm	**Product No.**	Reference Length (L_R) mm
150 816 00	630	**152 820 00**	732
150 818 00	670	**152 822 00**	757
150 820 00	710	**152 825 00**	800
150 822 00	750	**152 830 00**	850
150 824 00	762	**152 834 00**	900
150 825 00	800	**152 836 00**	950
150 827 00	812	**152 838 00**	1000
150 830 00	850	**152 840 00**	1060
150 832 00	875	**152 843 00**	1120
150 834 00	900	**152 844 00**	1157
150 836 00	950	**152 845 00**	1180
150 838 00	1000	**152 848 00**	1232
150 840 00	1060	**152 849 00**	1250
150 841 00	1087	**152 851 00**	1320
150 843 00	1120	**152 854 00**	1400
150 845 00	1180	**152 856 00**	1482
150 847 00	1212	**152 857 00**	1500
150 849 00	1250	**152 860 00**	1600
150 851 00	1320	**152 863 00**	1700
150 854 00	1400	**152 866 00**	1800
150 857 00	1500	**152 869 00**	1900
150 860 00	1600	**152 872 00**	2000
150 863 00	1700	**152 874 00**	2120
150 866 00	1800	**152 875 00**	2240
150 869 00	1900	**152 877 00**	2360
150 872 00	2000	**152 879 00**	2500
150 875 00	2240	**152 881 00**	2650
150 877 00	2360	**152 883 00**	2800
150 879 00	2500	**152 886 00**	3000
150 881 00	2650	**152 888 00**	3150
150 883 00	2800	**152 891 00**	3350
150 886 00	3000	**152 893 00**	3550
150 888 00	3150	**152 895 00**	3750
150 891 00	3350	**152 896 00**	4000
150 893 00	3550	**152 897 00**	4500

Weight per Metre

Profile	kg/m
SPZ	0,074
SPA	0,123
Z (10)	0,064
A (13)	0,109
B (17)	0,180

Important

During mounting the belt must be pre-tensioned. After running in for 15 - 20 minutes the belt needs to be retightened.

At a continuous temperature of over 60° standard V-belts have only a short service life. Oil, Fats and chemicals should be kept away from the drive as they destroy the standard V-belts. Intermediate length are available on request.

V-Belts DIN 2215

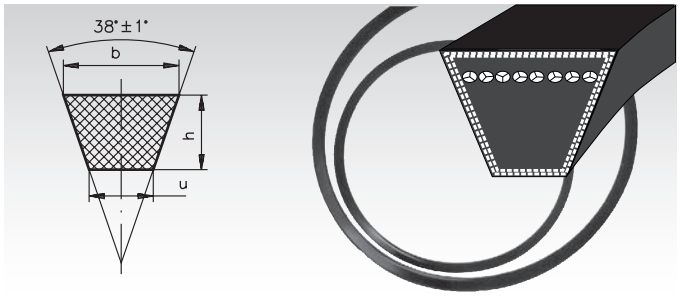

Dimensions in mm/wedge angle approx. 38°

ISO short symbol	Z	A	B
Width b	10	13	17
Height h	6	8	11
Width u	5.9	7.5	9.4
Smallest medium pulley diameter	50	75	125

Conversion table for reference and outside lengths.

Standard Profile	10	13	17
Inside Length = Reference Length - mm (approx.value)	22	30	40
Outside Length = Inside Length + mm (approx.value)	35	50	65

Profile Z (10)		Profile A (13)		Profile B (17)	
Product No.	Reference Length mm	**Product No.**	Reference Length mm	**Product No.**	Reference Length mm
150 602 00	397*	**152 610 00**	510	**154 606 00**	690
150 603 00	422*	**152 615 00**	590	**154 607 00**	710
150 604 00	447*	**152 618 00**	630	**154 608 00**	750
150 606 00	472*	**152 619 00**	660	**154 609 00**	790
150 608 00	497*	**152 620 00**	700	**154 610 00**	815
150 609 00	522*	**152 621 00**	740	**154 611 00**	840
150 611 00	552*	**152 622 00**	760	**154 613 00**	876
150 613 00	582*	**152 623 00**	780	**154 614 00**	890
150 615 00	597	**152 624 00**	805	**154 616 00**	940
150 616 00	622	**152 625 00**	830	**154 617 00**	965
150 618 00	652	**152 626 00**	855	**154 618 00**	990
150 619 00	692	**152 628 00**	880	**154 620 00**	1015
150 620 00	732	**152 629 00**	905	**154 621 00**	1040
150 621 00	747	**152 630 00**	930	**154 623 00**	1070
150 622 00	772	**152 631 00**	955	**154 625 00**	1100
150 623 00	797	**152 632 00**	980	**154 628 00**	1140
150 624 00	822	**152 633 00**	1005	**154 629 00**	1160
150 625 00	847	**152 635 00**	1030	**154 630 00**	1190
150 627 00	872	**152 636 00**	1060	**154 631 00**	1220
150 628 00	897	**152 637 00**	1071	**154 632 00**	1240
150 629 00	922	**152 638 00**	1090	**154 634 00**	1265
150 630 00	947	**152 640 00**	1130	**154 635 00**	1290
150 631 00	972	**152 641 00**	1150	**154 637 00**	1315
150 632 00	997	**152 643 00**	1180	**154 639 00**	1340
150 633 00	1022	**152 645 00**	1210	**154 640 00**	1360
150 635 00	1052	**152 646 00**	1230	**154 642 00**	1390
150 636 00	1082	**152 647 00**	1255	**154 644 00**	1412
150 638 00	1102	**152 648 00**	1280	**154 646 00**	1440
150 639 00	1142	**152 649 00**	1300	**154 647 00**	1462
150 641 00	1172	**152 651 00**	1330	**154 648 00**	1490
150 643 00	1202	**152 652 00**	1350	**154 649 00**	1513
150 645 00	1247	**152 654 00**	1405	**154 650 00**	1540
150 647 00	1272	**152 655 00**	1430	**154 651 00**	1565
150 648 00	1292	**152 657 00**	1480	**154 652 00**	1590
150 649 00	1317	**152 658 00**	1505	**154 653 00**	1615
150 651 00	1342	**152 659 00**	1530	**154 654 00**	1640
150 652 00	1393	**152 660 00**	1555	**154 655 00**	1665
150 654 00	1422	**152 663 00**	1605	**154 656 00**	1690
150 655 00	1472	**152 664 00**	1630	**154 657 00**	1716
150 657 00	1497	**152 665 00**	1655	**154 658 00**	1740
150 658 00	1522	**152 666 00**	1680	**154 663 00**	1840
150 659 00	1572	**152 667 00**	1706	**154 668 00**	1940
150 661 00	1622	**152 668 00**	1730	**154 673 00**	2040
150 665 00	1673	**152 669 00**	1755	**154 676 00**	2100
150 666 00	1697	**152 670 00**	1780	**154 679 00**	2160
150 667 00	1722	**152 671 00**	1805	**154 681 00**	2240
150 668 00	1772	**152 672 00**	1830	**154 682 00**	2280
150 670 00	1822	**152 674 00**	1884	**154 686 00**	2400
150 671 00	1872	**152 675 00**	1930	**154 689 00**	2490
150 672 00	1922	**152 676 00**	1960	**154 691 00**	2540
150 675 00	2022	**152 677 00**	2030	**154 692 00**	2580
150 677 00	2142	**152 679 00**	2150	**154 694 00**	2690
150 679 00	2262	**152 681 00**	2270	**154 695 00**	3040
150 681 00	2382	**152 683 00**	2390	**154 696 00**	3190
150 682 00	2522	**152 685 00**	2530	**154 697 00**	3590

* Toothed belt. Subject to change without notice.



Qualitiy Management DIN EN ISO 9001

MÄDLER GmbH maintains a quality management system according to DIN EN ISO 9001 and was certified the first time in 1995.

On the iternet at **www. maedler.de** in the section **Downloads** you find:

- PDF catalogues in several languages.
- Operating instructions.
- Safety data sheets.
- Excel-Pricelist for customers in Germany.
- Certificates of conformity.
- Quality management certificate DIN 9001.
- Certificate AEO.
- Company profile.
- CAD files.

MÄDLER® meets even the highest quality requirements:Top quality, precision and reliability.

Overview Spur Gears with Straight Tooth System

		Module	Tooth width in mm	Page
	**Spur gears: Polyacetal / Polyketone, die cast, straight tooth system, with hub**	0,5	3	199
		0,7	6	200
		1,0	9	201
		1,25	10	202
		1,5	12	203
		2,0/3,0	15/19	204
	**Spur gears: POM white, milled straight tooth system with hub**	0,5	4	205
		0,7	5	206
		1,0	10	207
		1,25/1,5	10/15	208
		2,0/2,5/3,0	16/20/25	209
	**Spur gears: POM black, milled straight tooth system with hub**	1,0	15	211
		1,5	17	211
		2	20	212
		2,5	25	212
		3,0	30	212
STAINLESS 	**Spur gears: Plastic with core made from steel and stainless steel, with hub**	1,5/2,0	17/20	213
		2,5/3,0/4,0	25/30/40	214
	**Spur gears: Brass, straight tooth system with hub**	0,3	2	215
		0,5	2	216
		0,7	4	217
		1,0	6,5	218
 	**Spur gears: Steel, straight tooth system with and without hub (* only with hub)**	0,5*	4	219
		0,7*	5	220
		1,0*	6,5	221
		1,0	10 / 15	222
		1,25	10	224
		1,5*	10	225
		1,5	15 / 17	226
		1,59 (pitch 5 mm)*	12	248
		2,0	16 / 20	228
		2,5	20 / 25	230
		3,0	25 / 30	232
		3,18 (pitch 10 mm)*	25	248
		4,0	30 / 40	234
		5,0	40 / 50	236
		6,0	50 / 60	238
		8,0*	65	239
	**Spur Gears: straight tooth system, teeth hardened**	1,0/1,5/2,0	15/15/20	240
		2,5/3,0	25/30	241
		4,0/5,0	40/50	241
	**Precision Spur Gears: straight tooth system, hardened and ground**	1,0/1,5	10/15	242
		2,0/3,0	20/25	243
STAINLESS 	**Spur gears: Stainless steel, straight tooth system with hub**	1,0/1,5	10/15	244
		2,0/2,5	16/20	245
		3,0/4,0	25/30	246
		1,59 (pitch 5 mm)	12	248
		3,18 (pitch 10 m)	25	248

Overview Spur Gear Elements with straight tooth system



Spur gear shafts: **Steel, straight tooth system**

Module	Length in mm	Page
1,0/1,5,/2,0	200-250	247



Internal gears: **Brass, straight tooth system**

Internal gears: **Steel, straight tooth system**

Module	Tooth width in mm	Page
0,5/0,7,/1,0	4/6/8	249
1,0/1,5/2,0	10/15/16	249



Ratchet wheels and braces: **Steel, straight tooth system**

Module	Tooth width in mm	Page
3,14	4/9	250
4,71	6/9	250

Overview Spur Gears with Helical Teeth



Spur gears: **Brass, helical teeth, right hand**

Module	Tooth width in mm	Page
0,3/0,5	5/10	251



Spur gears: **Steel, helical teeth, right hand and left hand**

Module	Tooth width in mm	Page
1,0	10	251



Spur gears: **Steel, helical teeth, left hand, hardened and ground**

Module	Tooth width in mm	Page
2,0/3,0	28	252
4,0/5,0	40/50	253

Gear racks

Page 255





Reworking within 24h-service possible. Custom made parts on request.

General Basics for Spur Gears

Spur gears enable a non-slip power transmission between two parallel-mounted shafts. The spur gears listed in the catalogue are involute gears with a pressure angle of 20°.

Please note that gears with a number of teeth < 17 are undercut for manufacturing reasons (one reason for this is the simple calculation of the centre distance). The centre distance tolerances depend on the tooth quality in line with DIN 3964. The modules for spur gears used in the catalogue were derived from DIN 780 Series 1.

The formulas below apply to straight and helical spur gears for the usual gear-cutting tools (see table) and for the addendum modification 0 for sprocket and wheel (the so-called reference centre distance tooth system).

Module-Series 1

Module 0.3 Module 0.5 Module 0.7 Module 1.0 Module 1.25 Module 1.5 Module 2.0 Module 2.5 Module 3.0 Module 4.0 Module 5.0 Module 6.0 Module 8.0

Module-Series 2

Module 0.75 Module 3.5 Module 7.0

Rotational direction changes with every gear

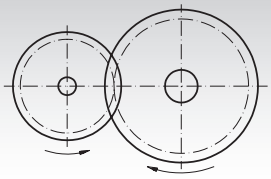

Teeth straight

to be calculated	given unit	formula
No. of Teeth = z	Pitch Ø and Module	$\frac{d}{m}$
	Addendum-Circle Ø	$\frac{d_a - 2m}{m}$
Module = m in mm	Pitch	$\frac{t_0}{\pi}$
	Tip Ø and No. of Teeth	$\frac{d_a}{z + 2}$
	Pitch Ø and No. of Teeth	$\frac{d}{z}$
Pitch Ø = d in mm	No. of Teeth and Module	$z \cdot m$
	No. of Teeth and Tip Ø	$\frac{z \cdot d_a}{z + 2}$
	Tip Ø and Module	$d_a - 2m$
Tip Ø = d_a in mm	No. of Teeth and Module	$(z + 2) \cdot m$
	No. of Teeth and Pitch Ø	$d + \frac{2\,d}{z}$
	Pitch Ø and Module	$d + 2\,m$
Centre distance = a in mm	No. of Teeth and Module	$\left(\frac{z_1 + z_2}{2}\right) \cdot m$
	Pitch Ø and Pitch Ø	$\frac{d_1 + d_2}{2}$
Reduction Ratio = i	No. of Teeth and No. of Teeth	$\frac{z_2}{z_1}$
	Speed and Speed	$\frac{n_1}{n_2}$
Torque = Md in Nm	Power and Speed [kW] [min⁻¹]	$9550 \cdot \frac{P}{n}$
Peripheral Speed = V in m/sec.	Pitch Ø and Speed [mm] [min⁻¹]	$\frac{\pi \cdot d \cdot n}{60.000}$

Material quality: Information about the material quality can be found at each individual group of gears.

Teeth helical

to be calculated	given unit	formula
No. of Teeth	Pitch Ø, Standard Module and Spiral Angle	$\frac{d \cdot \cos ß}{m_n}$
	Tip Ø, Standard Module and Spiral Angle	$\frac{(d_a - 2\,m_n) \cdot \cos ß}{m_n}$
Normal Module	Standard Pitch	$\frac{t_{n0}}{\pi}$
	Pitch Ø, No. of Teeth and Spiral Angle	$\frac{d \cdot \cos ß}{z}$
	Tip Ø, No. of Teeth and Spiral Angle	$\frac{d_a}{\frac{z}{\cos ß} + 2}$
Real module	Reference Circle Pitch	$\frac{t_s}{\pi}$
	Standard Module and Spiral Angle	$\frac{m_n}{\cos ß}$
	Pitch Ø and No. of Teeth	$\frac{d}{z}$
Pitch Ø	No. of Teeth, Standard Module and Spiral Angle	$\frac{z \cdot m_n}{\cos ß}$
	No. of Teeth, Tip Ø and Spiral Angle	$\frac{z \cdot d_a}{z + 2 \cdot \cos ß}$
	Tip Ø and Standard Module	$d_a - 2\,m_n$
Tip Ø	No. of Teeth, Standard Module and Spiral Angle	$\left(\frac{z}{\cos ß} + 2\right) m_n$
	Pitch Ø and Standard Module	$d + 2m_n$
	Pitch Ø, No. of Teeth and Spiral Angle	$d + \frac{2\,d \cdot \cos ß}{z}$
Centre distance	No. of Teeth, Standard Module and Spiral Angle	$\left(\frac{z_1 + z_2}{2}\right) \frac{m_n}{\cos ß}$
	Pitch Ø and Pitch Ø	$\frac{d_1 + d_2}{2}$
Spiral Angle	Standard Module u. Real Module	$\frac{m_n}{m_s} = \cos ß$
	Standard Module, No. of Teeth and Pitch Ø	$\frac{z \cdot m_n}{d} = \cos ß$

Recommendations for the Lubrication of Spur Gear Units

Peripheral Speed	Lubrication	Lubricant
up to 1 m/s	Application of Lubricant	Adhesive Lubricant
up to 4 m/s	Splash Lubrication/Spray Lubrication	Grease or Adh. Lubricant
up to 15 m/s	Splash Lubrication	Oil
over 15 m/s	Pressure-Circulation or Spray Lubrication	Oil

Note Regarding the Torque-Values Stated in the Catalogue

The torque values given for gears in the dimension tables (the value "perm. MT" stated in Nm or Ncm) only relate to the teeth, without considering the shaft diameter or key size.

The load bearing capacity calculations are based on the basic principles regarding the pitting resistance of the tooth flanks and the occurring tooth root stress. The calculations are based on the DIN 3990 (Method B). For the calculation, the following assumptions were made:

Calcul. Factor/Determining Factor	Abbreviation	Value	Note
Calculation Method	-	-	DIN 3990, method B
DIN Quality	-	8	-
Tooth-Number Ratio	U	1	If U > 1, the flank safety for long and short addendum teeth increases while the tooth-root safety decreases For other tooth-number ratios please check both pinion and gear!
Manufacturing Tool: Addendum/Dedendum/ Tip Rounding	$h_{aP0}/h_{fP0}/rho_{aPo}$	1.25/1/0.25	Hob
Flank Safety	S_H	1.0	Endurance strength 10.000 h (for steel)
Tooth-Root Safety	S_F	1.5	Endurance strength 10.000 h (for steel)
Application Factor	K_A	1.25	Industrial gear mechanisms, uniform, light shocks.
Dynamics Factor	K_V	1.0	Usually without great influence
Load Distribution over Width	K_{Hbeta}	1	Idealised; requires precise, rigid and symmetric mounting
Lubricant/Surface Roughness Speed Factor	$Z_L * Z_V * Z_R$	1	• sufficient oil-lubrication • relative surface roughness $R_{Z100} = 10$ • peripheral speed 10 m/s
Lifetime Factor	Z_N	1	Endurance strength 10.000 h (for steel)
Operating temperature for plastic gears	T_{Betr}	up to 60°C	The material parametres of plastic gears largely depend on the temperature

The load bearing capacity of a gear depends on various different factors. The stated torques are only reference values, serving to facilitate the selection process. If necessary, a specific calculation of strength and load bearing capacity must be carried out for each application.

Depending on the operating conditions the wear lifespan may be influenced by adequate grease/oil lubrication. Please also note that insufficient lubrication may lead to scuffing of the gear flanks.

IMPORTANT

Please make sure you always check the permissible torque separately for the pinion and the gear side!
Due to their higher elasticity plastic gears are calculated with a K_{Hbeta} of 1. Gears made from brass and zinc-die-cast are also calculated with a K_{Hbeta} of 1, as a good running-in characteristic is assumed for these materials.

For the materials used, the following characteristic values were taken as basis:

Material	Perm. Pulsating Fatigue Strength under Bending Stress s_{bw} in N/mm²	Perm. Flank Pressure s_{Hlim} in N/mm²
POM	28 (VDI-2545)	40 (VDI-2545)
Polyacetal resin	28 (VDI-2545)	40 (VDI-2545)
PA12G	40	48
ZnAl4Cu1	60	150
Ms58 (2.0401)	100	250
11SMnPb30 (alt: 9SMn28K)	150	350
C45 heat treated	200	590
42CrMo4 hardened	350	1360
16MnCr5 case hardened	400	1630
X10CrNiS18 9 (1.4305, stainless, austenitic)	200	400

Real Size of the Module Teeth DIN 867

Module 0.3

Module 0.5

Module 0.7



Module 1.0



Module 1.25



Module 1.5



Module 2.0



Module 2.5





Module 4.0



Module 5.0



Module 6.0



Module 8.0





Reworking within 24h-service possible. Custom made parts on request.

Spur Gears Made from Plastic, with One-Sided Hub, Straight Tooth System, Die-Cast Version

Material: Polyacetal, nature white or polyketone (PK), nature, ivory-colored.

Moulded version. Bores machined. Pressure angle 20°. Usable also under water or other mediums.

Polyacetal: Standard quality with high hardness.

Polyketone: Lower friction leads to much larger lifespan, even without lubrication. Much higher safety against tooth breaking, specially at longterm usage.

Temperature Range: -40°C to +140°C due to the load. Material reference values page 821.

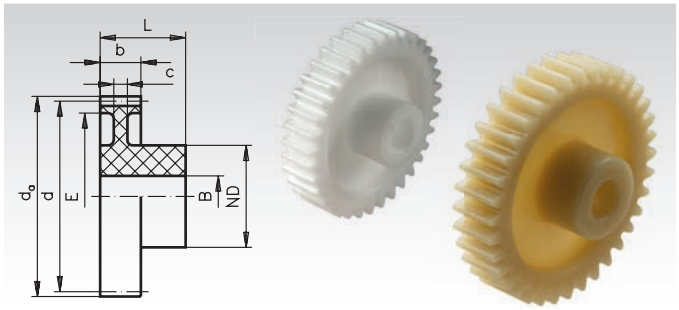

Ordering Details: e.g.: Product No. 281 012 00, Spur Gear, Polyacetal, Module 0.5, 12 Teeth

Module 0.5 Tooth Width b = 3 mm

Product No. Polyacetal	Product No. Polyketone	Number of teeth	b mm	d_a mm	d mm	L mm	E mm	c mm	ND mm	B mm	perm. MT* Polyacetal Ncm	perm. MT* Polyketone Ncm	Weight Polyacetal g	Weight Polyketone g
281 012 00	**281 012 01**	12	3	7	6	7	-	-	4	2	0,80	0,84	0,14	0,13
281 013 00	**281 013 01**	13	3	7,5	6,5	7	-	-	4	2	0,90	0,95	0,16	0,14
281 014 00	**281 014 01**	14	3	8	7	7	-	-	5	2	1,00	1,05	0,22	0,20
281 015 00	**281 015 01**	15	3	8,5	7,5	10	-	-	6	3	1,10	1,16	0,34	0,30
281 016 00	**281 016 01**	16	3	9	8	10	-	-	6	3	1,20	1,26	0,35	0,31
281 017 00	**281 017 01**	17	3	9,5	8,5	10	-	-	6	3	1,30	1,37	0,39	0,35
281 018 00	**281 018 01**	18	3	10	9	10	-	-	7,8	4	1,50	1,58	0,53	0,48
281 019 00	**281 019 01**	19	3	10,5	9,5	10	-	-	7,8	4	1,70	1,79	0,57	0,51
281 020 00	**281 020 01**	20	3	11	10	10	-	-	7,9	4	1,90	2,00	0,60	0,54
281 021 00	**281 021 01**	21	3	11,5	10,5	10	-	-	8	4	2,10	2,21	0,63	0,57
281 022 00	**281 022 01**	22	3	12	11	10	-	-	10	4	2,40	2,52	0,92	0,83
281 023 00	**281 023 01**	23	3	12,5	11,5	10	-	-	9,9	4	2,60	2,73	0,95	0,85
281 024 00	**281 024 01**	24	3	13	12	10	-	-	9,9	4	2,90	3,05	0,99	0,89
281 025 00	**281 025 01**	25	3	13,5	12,5	10	-	-	9,9	4	3,20	3,36	1,03	0,92
281 026 00	**281 026 01**	26	3	14	13	10	-	-	9,9	4	3,50	3,68	1,08	0,97
281 027 00	**281 027 01**	27	3	14,5	13,5	10	-	-	9,9	4	3,80	3,99	1,12	1,00
281 028 00	**281 028 01**	28	3	15	14	10	-	-	10	4	4,20	4,41	1,20	1,08
281 030 00	**281 030 01**	30	3	16	15	10	-	-	11,9	4	4,90	5,15	1,55	1,39
281 032 00	**281 032 01**	32	3	17	16	10	-	-	12	4	5,70	5,99	1,68	1,51
281 035 00	**281 035 01**	35	3	18,5	17,5	10	-	-	12	4	7,00	7,35	1,86	1,67
281 036 00	**281 036 01**	36	3	19	18	10	-	-	11,9	4	7,50	7,88	1,90	1,70
281 038 00	**281 038 01**	38	3	20	19	10	-	-	12	4	8,50	8,93	2,01	1,80
281 040 00	**281 040 01**	40	3	21	20	10	14,8	2	12	4	9,50	9,98	2,01	1,80
281 042 00	**281 042 01**	42	3	22	21	10	17	2	12,2	4	10,6	11,1	2,14	1,92
281 045 00	**281 045 01**	45	3	23,5	22,5	10	18	2	12,2	4	12,5	13,1	2,33	2,09
281 048 00	**281 048 01**	48	3	25	24	10	19	2	15	6	14,5	15,2	3,03	2,72
281 050 00	**281 050 01**	50	3	26	25	10	20	2	15	6	16,0	16,8	3,11	2,79
281 052 00	**281 052 01**	52	3	27	26	10	21	2	15	6	17,5	18,4	3,24	2,91
281 054 00	**281 054 01**	54	3	28	27	10	21	2	15	6	19,0	20,0	3,43	3,08
281 055 00	**281 055 01**	55	3	28,5	27,5	10	23	2	15	6	19,8	20,8	3,47	3,11
281 056 00	**281 056 01**	56	3	29	28	10	23	2	15	6	20,4	21,4	3,61	3,24
281 060 00	**281 060 01**	60	3	31	30	10	23	2	15	6	21,2	22,3	3,88	3,48
281 064 00	**281 064 01**	64	3	33	32	10	23	2	15	6	23,5	24,7	4,33	3,88
281 065 00	**281 065 01**	65	3	33,5	32,5	10	23	2	15	6	23,9	25,1	4,42	3,96
281 070 00	**281 070 01**	70	3	36	35	10	29	2	15	6	25,8	27,1	4,62	4,14
281 072 00	**281 072 01**	72	3	37	36	10	30	2	15	6	26,5	27,8	4,89	4,39
281 075 00	**281 075 01**	75	3	38,5	37,5	10	33	2	15	6	27,7	29,1	4,86	4,36
281 080 00	**281 080 01**	80	3	41	40	10	33	2	15	6	29,5	31,0	5,68	5,09
281 090 00	**281 090 01**	90	3	46	45	10	39	2	15	6	33,2	34,9	6,55	5,88
281 096 00	**281 096 01**	96	3	49	48	10	42	2	15	6	35,5	37,3	6,90	6,19
281 100 00	**281 100 01**	100	3	51	50	10	44	2	15	6	37,0	38,9	7,51	6,74
281 120 00	**281 120 01**	120	3	61	60	10	54	2	15	6	44,0	46,2	10,3	9,23

* Basis of calculations see page 197.

Note Regarding the Machining

Inside these die-cast parts are some cavities caused by production. These parts should therefore not be drilled too deep. With larger bores or when grooving the cavities might become visible. This often does not affect the functionality.



Reworking within 24h-service possible. Custom made parts on request.

Spur Gears Made from Plastic, with One-Sided Hub, Straight Tooth System, Die-Cast Version

Material: Polyacetal, nature white or polyketone (PK), nature, ivory-colored.

Moulded version. Bores machined. Pressure angle 20°. Usable also under water or other mediums.

Polyacetal: Standard quality with high hardness.

Polyketone: Lower friction leads to much larger lifespan, even without lubrication. Much higher safety against tooth breaking, specially at longterm usage.

Temperature Range: -40°C to +140°C due to the load. Material reference values page 821.

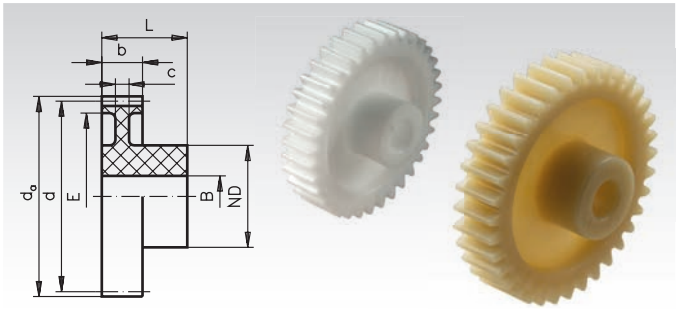

Ordering Details:e.g.: Product No. 282 012 00, Spur Gear, Polyacetal, Module 0.7, 12 Teeth

Module 0.7 Tooth Width b = 6 mm

Product No. Polyacetal	Product No. Polyketone	Number of teeth	b mm	d_a mm	d mm	L mm	E mm	c mm	ND mm	B mm	perm. MT* Polyacetal Ncm	perm. MT* Polyketone Ncm	Weight Polyacetal g	Weight Polyketone g
282 012 00	**282 012 01**	12	6	9,8	8,4	15	-	-	6	3	3,10	3,26	0,64	0,56
282 013 00	**282 013 01**	13	6	10,5	9,1	15	-	-	6	3	3,60	3,78	0,72	0,63
282 014 00	**282 014 01**	14	6	11,2	9,8	15	-	-	6	3	4,10	4,31	0,82	0,72
282 015 00	**282 015 01**	15	6	11,9	10,5	15	-	-	6	3	4,60	4,83	0,88	0,77
282 016 00	**282 016 01**	16	6	12,6	11,2	15	-	-	9	4	5,10	5,36	1,26	1,11
282 017 00	**282 017 01**	17	6	13,3	11,9	15	-	-	9	4	5,30	5,57	1,63	1,43
282 018 00	**282 018 01**	18	6	14,0	12,6	15	-	-	9	4	6,10	6,41	1,48	1,30
282 019 00	**282 019 01**	19	6	14,7	13,3	15	-	-	9	4	7,00	7,35	1,62	1,42
282 020 00	**282 020 01**	20	6	15,4	14,0	15	-	-	9	4	7,90	8,30	1,70	1,49
282 021 00	**282 021 01**	21	6	16,1	14,7	15	-	-	9	4	8,90	9,35	1,85	1,63
282 022 00	**282 022 01**	22	6	16,8	15,4	15	-	-	9	4	9,90	10,4	1,98	1,74
282 023 00	**282 023 01**	23	6	17,5	16,1	15	-	-	9	4	11,0	11,6	2,13	1,87
282 024 00	**282 024 01**	24	6	18,2	16,8	15	13	3	9	4	12,2	12,8	2,00	1,76
282 025 00	**282 025 01**	25	6	18,9	17,5	15	13	3	9	6	13,4	14,1	2,01	1,77
282 026 00	**282 026 01**	26	6	19,6	18,2	15	13	3	9	6	14,7	15,4	2,12	1,86
282 027 00	**282 027 01**	27	6	20,3	18,9	15	13	3	9	6	16,0	16,8	2,28	2,00
282 028 00	**282 028 01**	28	6	21,0	19,6	15	13	3	9	6	17,5	18,4	2,47	2,17
282 030 00	**282 030 01**	30	6	22,4	21,0	15	16	3	12	6	20,5	21,5	3,47	3,05
282 032 00	**282 032 01**	32	6	23,8	22,4	15	16	3	12	6	24,0	25,2	3,87	3,40
282 035 00	**282 035 01**	35	6	25,9	24,5	15	18,5	3	15	6	29,4	30,9	5,20	4,57
282 036 00	**282 036 01**	36	6	26,6	25,2	15	18,5	3	15	6	31,4	33,0	5,43	4,77
282 038 00	**282 038 01**	38	6	28,0	26,6	15	21	3	15	6	35,6	37,4	5,68	4,99
282 040 00	**282 040 01**	40	6	29,4	28,0	15	21	3	15	6	40,0	42,0	6,07	5,34
282 042 00	**282 042 01**	42	6	30,8	29,4	15	24	2	18	6	45,0	47,3	7,07	6,21
282 045 00	**282 045 01**	45	6	32,9	31,5	15	24	2	18	6	52,8	55,4	7,98	7,01
282 048 00	**282 048 01**	48	6	35,0	33,6	15	24	2	18	8	61,3	64,4	8,51	7,48
282 050 00	**282 050 01**	50	6	36,4	35,0	15	27,5	2	18	8	67,4	70,8	8,10	7,12
282 052 00	**282 052 01**	52	6	37,8	36,4	15	27,5	2	18	8	73,8	77,5	8,97	7,88
282 054 00	**282 054 01**	54	6	39,2	37,8	15	27,5	2	18	8	77,6	81,5	9,40	8,26
282 055 00	**282 055 01**	55	6	39,9	38,5	15	30	2	18	8	79,2	83,2	9,91	8,71
282 056 00	**282 056 01**	56	6	40,6	39,2	15	30	2	18	8	80,7	84,7	9,93	8,73
282 060 00	**282 060 01**	60	6	43,4	42,0	15	30	2	18	8	86,4	90,7	11,3	9,93
282 064 00	**282 064 01**	64	6	46,2	44,8	15	37	2	18	8	92,2	96,8	10,2	9,00
282 065 00	**282 065 01**	65	6	46,9	45,5	15	37	2	18	8	94,7	99,4	10,5	9,23
282 070 00	**282 070 01**	70	6	50,4	49,0	15	37	2	18	8	102	107	12,5	11,0
282 072 00	**282 072 01**	72	6	51,8	50,4	15	37	2	18	8	103	109	13,2	11,6
282 075 00	**282 075 01**	75	6	53,9	52,5	15	37	2	18	10	108	114	14,0	12,3
282 080 00	**282 080 01**	80	6	57,4	56,0	15	46,5	2	21	10	116	122	14,3	12,5
282 090 00	**282 090 01**	90	6	64,4	63,0	15	57	2	21	10	130	137	20,5	18,0
282 096 00	**282 096 01**	96	6	68,6	67,2	15	57	2	21	10	140	147	23,6	20,7
282 100 00	**282 100 01**	100	6	71,4	70,0	15	57	2	21	10	145	152	26,9	23,6
282 120 00	**282 120 01**	120	6	85,4	84,0	15	77	2	21	10	173	182	33,6	29,5

* Basis of calculations see page 197.

Note Regarding the Machining

Inside these die-cast parts are some cavities caused by production. These parts should therefore not be drilled too deep. With larger bores or when grooving the cavities might become visible. This often does not affect the functionality.



Reworking within 24h-service possible. Custom made parts on request.

Spur Gears Made from Plastic, with One-Sided Hub, Straight Tooth System, Die-Cast Version

Material: Polyacetal, nature white or polyketone (PK), nature, ivory-colored.

Moulded version. Bores machined. Pressure angle 20°. Usable also under water or other mediums.

Polyacetal: Standard quality with high hardness.

Polyketone: Lower friction leads to much larger lifespan, even without lubrication. Much higher safety against tooth breaking, specially at longterm usage.

Temperature Range: -40°C to +140°C due to the load. Material reference values page 821.

Ordering Details: e.g.: Product No. 283 012 00, Spur Gear, Polyacetal, Module 1, 12 Teeth

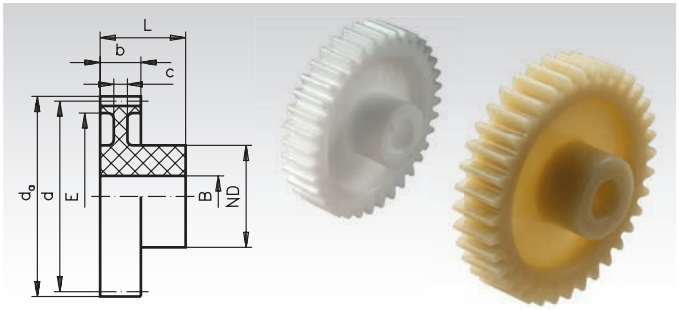

Module 1.0 Tooth Width b = 9 mm

Product No. Polyacetal	Product No. Polyketone	Number of teeth	b mm	d_a mm	d mm	L mm	E mm	c mm	ND mm	B mm	perm. MT* Polyacetal Ncm	perm. MT* Polyketone Ncm	Weight Polyacetal g	Weight Polyketone g
283 012 00	**283 012 01**	12	9	14	12	17	-	-	9	4	10,0	10,5	1,68	1,51
283 013 00	**283 013 01**	13	9	15	13	17	-	-	9	4	12,0	12,6	2,04	1,83
283 014 00	**283 014 01**	14	9	16	14	17	-	-	9	4	13,0	13,7	2,16	1,94
283 015 00	**283 015 01**	15	9	17	15	17	-	-	9	4	15,0	15,8	2,50	2,24
283 016 00	**283 016 01**	16	9	18	16	17	-	-	9	4	17,0	17,9	2,74	2,46
283 017 00	**283 017 01**	17	9	19	17	17	12	6	9	4	17,0	17,9	2,80	2,51
283 018 00	**283 018 01**	18	9	20	18	17	13	6	9	4	20,0	21,0	3,26	2,92
283 019 00	**283 019 01**	19	9	21	19	17	13	6	9	4	23,0	24,2	3,56	3,19
283 020 00	**283 020 01**	20	9	22	20	17	13	6	9	4	26,0	27,3	4,00	3,59
283 021 00	**283 021 01**	21	9	23	21	17	16	6	12	5	29,0	30,5	4,84	4,34
283 022 00	**283 022 01**	22	9	24	22	17	16	6	12	5	33,0	34,7	5,20	4,66
283 023 00	**283 023 01**	23	9	25	23	17	16	6	12	5	36,0	37,8	5,67	5,09
283 024 00	**283 024 01**	24	9	26	24	18	18,5	6	15	6	40,0	42,0	6,59	5,91
283 025 00	**283 025 01**	25	9	27	25	18	18,5	6	15	6	44,0	46,2	7,25	6,5
283 026 00	**283 026 01**	26	9	28	26	18	18,5	6	15	6	49,0	51,5	7,49	6,72
283 027 00	**283 027 01**	27	9	29	27	18	18,5	6	15	6	53,0	55,7	8,17	7,33
283 028 00	**283 028 01**	28	9	30	28	18	21	6	15	6	58,0	60,9	8,30	7,45
283 030 00	**283 030 01**	30	9	32	30	18	21	6	15	6	68,0	71,4	9,49	8,51
283 032 00	**283 032 01**	32	9	34	32	18	23,5	4,6	18	6	79,0	83,0	11,3	10,1
283 035 00	**283 035 01**	35	9	37	35	18	23,5	4,6	18	8	98,0	103	12,7	11,4
283 036 00	**283 036 01**	36	9	38	36	18	27	4,6	18	8	104	109	12,4	11,2
283 038 00	**283 038 01**	38	9	40	38	18	27	4,6	18	8	119	125	14,1	12,7
283 040 00	**283 040 01**	40	9	42	40	18	27	4,6	18	8	134	141	15,4	13,8
283 042 00	**283 042 01**	42	9	44	42	18	27	4,6	18	8	150	158	16,8	15,1
283 045 00	**283 045 01**	45	9	47	45	18	36,5	4,6	18	8	176	185	16,2	14,5
283 048 00	**283 048 01**	48	9	50	48	18	36,5	4,6	18	8	205	215	19,0	17,0
283 050 00	**283 050 01**	50	9	52	50	18	36,5	4,6	18	8	221	232	20,6	18,4
283 052 00	**283 052 01**	52	9	54	52	18	46	4,6	21	8	229	240	20,6	18,5
283 054 00	**283 054 01**	54	9	56	54	18	46	4,6	21	8	238	250	22,3	20,0
283 055 00	**283 055 01**	55	9	57	55	18	46	4,6	21	8	243	255	23,6	21,2
283 056 00	**283 056 01**	56	9	58	56	18	46	4,6	21	8	247	259	25,1	22,6
283 058 00	**283 058 01**	58	9	60	58	18	46	4,6	21	8	257	270	26,4	23,7
283 060 00	**283 060 01**	60	9	62	60	18	46	4,6	21	8	266	279	29,0	26,0
283 064 00	**283 064 01**	64	9	66	64	18	56,5	4,6	21	10	285	299	33,9	30,4
283 065 00	**283 065 01**	65	9	67	65	18	56,5	4,6	21	10	289	303	36,1	32,4
283 070 00	**283 070 01**	70	9	72	70	18	56,5	4,6	21	10	312	328	41,7	37,4
283 072 00	**283 072 01**	72	9	74	72	18	66	4,6	21	10	321	337	39,3	35,6
283 075 00	**283 075 01**	75	9	77	75	18	66	4,6	21	10	335	352	44,4	39,9
283 080 00	**283 080 01**	80	9	82	80	18	66	4,6	21	10	358	376	52,6	47,2
283 085 00	**283 085 01**	85	9	87	85	18	66	4,6	21	10	380	399	59,5	53,4
283 090 00	**283 090 01**	90	9	92	90	18	76	4,6	21	10	403	423	66,3	59,5
283 100 00	**283 100 01**	100	9	102	100	18	86	4,6	24	12	447	469	68,6	61,6
283 110 00	**283 110 01**	110	9	112	110	18	96	4,6	24	12	491	516	83,0	74,4
283 120 00	**283 120 01**	120	9	122	120	18	105,5	4,6	24	12	535	562	95,6	84,7
283 130 00	**283 130 01**	130	9	132	130	18	115	4,6	24	12	573	602	110	98,4
283 140 00	**283 140 01**	140	9	142	140	18	125	4,6	24	12	616	647	124	111

* Basis of calculations see page 197.

Note Regarding the Machining

Inside these die-cast parts are some cavities caused by production. These parts should therefore not be drilled too deep. With larger bores or when grooving the cavities might become visible. This often does not affect the functionality.



Reworking within 24h-service possible. Custom made parts on request.

Spur Gears Made from Plastic, with One-Sided Hub, Straight Tooth System, Die-Cast Version

Material: Polyacetal, nature white or polyketone (PK), nature, ivory-colored.

Moulded version. Bores machined. Pressure angle 20°. Usable also under water or other mediums.

Polyacetal: Standard quality with high hardness.

Polyketone: Lower friction leads to much larger lifespan, even without lubrication. Much higher safety against tooth breaking, specially at longterm usage.

Temperature Range: -40°C to +140°C due to the load. Material reference values page 821.

Ordering Details: e.g.: Product No. 284 012 00, Spur Gear, Polyacetal, Module 1.25, 12 Teeth

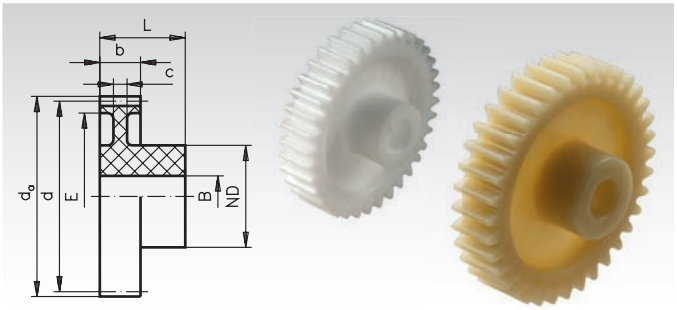

Module 1.25 Tooth Width b = 10 mm

Product No. Polyacetal	Product No. Polyketone	Number of teeth	b mm	d_a mm	d mm	L mm	E mm	c mm	ND mm	B mm	perm. MT* Polyacetal Ncm	perm. MT* Polyketone Ncm	Weight Polyacetal g	Weight Polyketone g
284 012 00	**284 012 01**	12	10	17,5	15	19	-	-	9	5	19,0	20,0	2,64	2,28
284 013 00	**284 013 01**	13	10	18,75	16,25	19	-	-	9	5	21,0	22,1	2,92	2,62
284 014 00	**284 014 01**	14	10	20	17,5	19	-	-	9	5	24,0	25,2	3,43	3,08
284 015 00	**284 015 01**	15	10	21,25	18,75	19	13	7	9	5	27,0	28,4	3,79	3,4
284 016 00	**284 016 01**	16	10	22,5	20	19	13	7	9	5	31,0	32,6	4,24	3,8
284 017 00	**284 017 01**	17	10	23,75	21,25	19	13	7	9	5	32,0	33,6	4,50	4,04
284 018 00	**284 018 01**	18	10	25	22,5	19	16	7	12	5	36,0	37,8	5,99	5,37
284 019 00	**284 019 01**	19	10	26,25	23,75	19	16	7	12	5	42,0	44,1	6,62	5,94
284 020 00	**284 020 01**	20	10	27,5	25	19	16	7	12	5	47,0	49,4	7,08	6,35
284 021 00	**284 021 01**	21	10	28,75	26,25	19	18,5	7	15	6	53,0	55,7	8,10	7,27
284 022 00	**284 022 01**	22	10	30	27,5	19	18,5	7	15	6	59,0	62,0	9,14	8,20
284 023 00	**284 023 01**	23	10	31,25	28,75	19	18,5	7	15	6	66,0	69,3	9,75	8,75
284 024 00	**284 024 01**	24	10	32,5	30	19	21	7	15	6	73,0	76,7	10,4	9,4
284 025 00	**284 025 01**	25	10	33,75	31,25	19	21	7	15	6	81,0	85,1	11,4	10,2
284 026 00	**284 026 01**	26	10	35	32,5	19	23,5	5,5	18	6	89,0	93,5	12,5	11,2
284 027 00	**284 027 01**	27	10	36,25	33,75	19	23,5	5,5	18	6	97,0	102	12,9	11,6
284 028 00	**284 028 01**	28	10	37,5	35	19	23,5	5,5	18	8	106	111	13,8	12,4
284 030 00	**284 030 01**	30	10	40	37,5	19	27	5,5	18	8	124	130	14,9	13,3
284 032 00	**284 032 01**	32	10	42,5	40	19	27	5,5	18	8	145	152	17,0	15,3
284 035 00	**284 035 01**	35	10	46,25	43,75	19	27	5,5	18	8	179	188	20,2	18,1
284 036 00	**284 036 01**	36	10	47,5	45	19	36	5,5	18	8	191	201	18,2	16,3
284 038 00	**284 038 01**	38	10	50	47,5	19	36	5,5	18	8	217	228	21,1	18,9
284 040 00	**284 040 01**	40	10	52,5	50	19	36	5,5	18	8	245	257	23,1	20,7
284 042 00	**284 042 01**	42	10	55	52,5	19	36	5,5	18	8	275	289	27,0	24,2
284 045 00	**284 045 01**	45	10	58,75	56,25	19	46	5,5	21	8	324	340	28,8	25,9
284 048 00	**284 048 01**	48	10	62,5	60	19	46	5,5	21	8	366	384	33,1	29,7
284 050 00	**284 050 01**	50	10	65	62,5	19	46	5,5	21	8	383	402	37,2	33,3
284 052 00	**284 052 01**	52	10	67,5	65	19	56	5,5	21	10	399	419	39,5	35,5
284 054 00	**284 054 01**	54	10	70	67,5	19	56	5,5	21	10	416	437	38,7	34,7
284 055 00	**284 055 01**	55	10	71,25	68,75	19	56	5,5	21	10	424	445	40,4	36,2
284 056 00	**284 056 01**	56	10	72,5	70	19	56	5,5	21	10	432	454	46,9	42,1
284 060 00	**284 060 01**	60	10	77,5	75	19	66	5,5	21	10	465	488	49,9	44,8
284 064 00	**284 064 01**	64	10	82,5	80	19	66	5,5	21	10	497	522	57,9	52,0
284 065 00	**284 065 01**	65	10	83,75	81,25	19	66	5,5	21	10	505	530	60,0	53,9
284 070 00	**284 070 01**	70	10	90	87,5	19	76	5,5	21	10	546	573	70,2	63,0
284 072 00	**284 072 01**	72	10	92,5	90	19	76	5,5	21	12	567	595	74,4	66,7
284 075 00	**284 075 01**	75	10	96,25	93,75	19	76	5,5	21	10	585	614	81,9	73,5
284 080 00	**284 080 01**	80	10	102,5	100	19	86	5,5	24	12	618	649	79,8	71,6
284 090 00	**284 090 01**	90	10	115	112,5	19	95	5,5	24	12	635	667	99,5	89,3
284 100 00	**284 100 01**	100	10	127,5	125	19	105,5	5,5	24	12	654	686	123	110
284 110 00	**284 110 01**	110	10	140	137,5	19	115	5,5	24	12	711	746	149	134

* Basis of calculations see page 197.

Note Regarding the Machining

Inside these die-cast parts are some cavities caused by production. These parts should therefore not be drilled too deep. With larger bores or when grooving the cavities might become visible. This often does not affect the functionality.



Reworking within 24h-service possible. Custom made parts on request.

Spur Gears Made from Plastic, with One-Sided Hub, Straight Tooth System, Die-Cast Version

Material: Polyacetal, nature white or polyketone (PK), nature, ivory-colored.

Moulded version. Bores machined. Pressure angle 20°. Usable also under water or other mediums.

Polyacetal: Standard quality with high hardness.

Polyketone: Lower friction leads to much larger lifespan, even without lubrication. Much higher safety against tooth breaking, specially at longterm usage.

Temperature Range: -40°C to +140°C due to the load. Material reference values page 821.

Ordering Details: e.g.: Product No. 285 012 00, Spur Gear, Polyacetal, Module 1.5, 12 Teeth

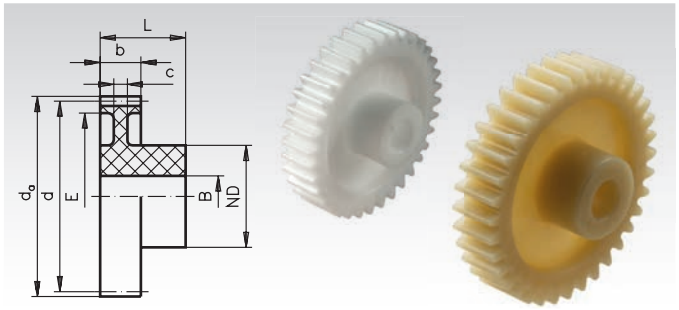

Module 1.5 Tooth Width b = 12 mm / 19 mm

Product No. Polyacetal	Product No. Polyketone	Number of teeth	b mm	d_a mm	d mm	L mm	E mm	c mm	ND mm	B mm	perm. MT* Polyacetal Ncm	perm. MT* Polyketone Ncm	Weight Polyacetal g	Weight Polyketone g
285 012 00	**285 012 01**	12	12	21	18	23	-	-	14	6	33,0	34,7	5,66	5,08
285 013 00	**285 013 01**	13	12	22,5	19,5	23	-	-	14	6	38,0	39,9	6,14	5,51
285 014 00	**285 014 01**	14	12	24	21	23	-	-	14	6	44,0	46,2	6,95	6,23
285 015 00	**285 015 01**	15	12	25,5	22,5	23	-	-	14	6	49,0	51,5	7,90	7,09
285 016 00	**285 016 01**	16	12	27	24	23	-	-	14	6	55,0	57,8	8,69	7,79
285 017 00	**285 017 01**	17	12	28,5	25,5	23	-	-	14	6	57,0	59,9	9,71	8,71
285 018 00	**285 018 01**	18	12	30	27	23	-	-	17	8	65,0	68,3	10,8	9,70
285 019 00	**285 019 01**	19	12	31,5	28,5	23	-	-	17	8	75,0	78,8	12,0	10,8
285 020 00	**285 020 01**	20	12	33	30	23	-	-	17	8	85,0	89,3	12,6	11,3
285 021 00	**285 021 01**	21	12	34,5	31,5	23	22,5	5	17	8	96,0	101	13,1	11,7
285 022 00	**285 022 01**	22	12	36	33	23	22,5	5	17	8	107	112	14,3	12,9
285 023 00	**285 023 01**	23	12	37,5	34,5	23	22,5	5	17	8	119	125	15,5	13,9
285 024 00	**285 024 01**	24	12	39	36	23	26,5	5	19	8	132	139	17,0	15,2
285 025 00	**285 025 01**	25	12	40,5	37,5	23	26,5	5	19	8	146	153	19,0	17,0
285 026 00	**285 026 01**	26	12	42	39	23	26,5	5	19	8	160	168	19,9	17,9
285 027 00	**285 027 01**	27	12	43,5	40,5	23	25,5	5	19	8	175	184	21,9	19,7
285 028 00	**285 028 01**	28	12	45	42	23	25,5	5	19	8	191	201	23,5	21,1
285 030 00	**285 030 01**	30	12	48	45	23	33,5	5	24	10	225	236	26,2	23,5
285 032 00	**285 032 01**	32	12	51	48	23	33,5	5	24	10	262	275	30,2	27,1
285 035 00	**285 035 01**	35	12	55,5	52,5	23	41,5	5	24	10	324	340	31,9	28,6
285 036 00	**285 036 01**	36	12	57	54	23	41,5	5	24	10	347	364	33,3	29,9
285 038 00	**285 038 01**	38	12	60	57	23	41,5	5	24	10	394	414	38,7	34,7
285 040 00	**285 040 01**	40	12	63	60	23	48,5	5	24	10	445	467	37,9	34,0
285 042 00	**285 042 01**	42	12	66	63	23	48,5	5	24	10	500	525	41,8	37,5
285 045 00	**285 045 01**	45	12	70,5	67,5	23	48,5	5	24	10	589	618	50,2	45,1
285 048 00	**285 048 01**	48	12	75	72	23	48,5	5	24	10	635	667	57,7	51,8
285 050 00	**285 050 01**	50	12	78	75	23	63	5	27	12	664	697	52,4	47,0
285 052 00	**285 052 01**	52	12	81	78	23	63	5	27	12	693	728	57,6	51,7
285 054 00	**285 054 01**	54	12	84	81	23	63	5	27	12	721	757	64,2	57,6
285 055 00	**285 055 01**	55	12	85,5	82,5	23	63	5	27	12	735	772	67,9	60,9
285 060 00	**285 060 01**	60	12	93	90	23	63	5	27	12	806	846	85,8	77,0
285 070 00	**285 070 01**	70	12	108	105	23	88	5	30	14	946	993	95,7	85,9
285 080 00	**285 080 01**	80	12	123	120	23	104	5	30	14	1080	1140	117	104
285 090 00	**285 090 01**	90	12	138	135	23	116	5	30	14	1210	1270	144	129
285 100 00	**285 100 01**	100	19	153	150	34	133	8	40	20	1340	1410	290	260
285 110 00	**285 110 01**	110	19	168	165	34	148	8	40	20	1480	1550	336	301
285 120 00	**285 120 01**	120	19	183	180	34	163	8	40	20	1610	1690	389	384
285 130 00	**285 130 01**	130	19	198	195	34	178	8	40	20	1750	1840	440	394
285 140 00	**285 140 01**	140	19	213	210	34	193	8	40	20	1880	1970	498	447
285 150 00	**285 150 01**	150	19	228	225	34	208	8	40	20	2020	2120	566	508

* Basis of calculations see page 197.

Note Regarding the Machining

Inside these die-cast parts are some cavities caused by production. These parts should therefore not be drilled too deep. With larger bores or when grooving the cavities might become visible. This often does not affect the functionality.



Reworking within 24h-service possible. Custom made parts on request.

Spur Gears Made from Plastic, with One-Sided Hub, Straight Tooth System, Die-Cast Version

Material: Polyacetal, nature white or polyketone (PK), nature, ivory-colored.

Moulded version. Bores machined. Pressure angle 20°. Usable also under water or other mediums.

Polyacetal: Standard quality with high hardness.

Polyketone: Lower friction leads to much larger lifespan, even without lubrication. Much higher safety against tooth breaking, specially at longterm usage.

Temperature Range: -40°C to +140°C due to the load. Material reference values page 821.

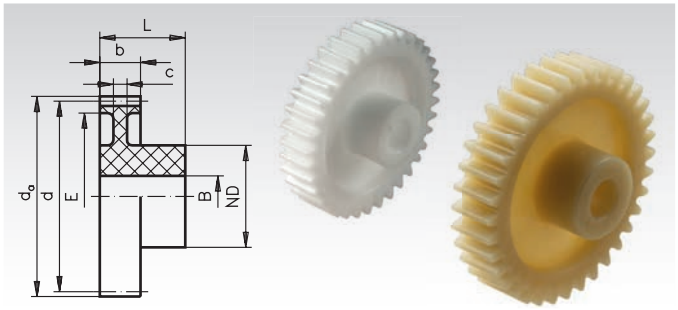

Ordering Details: e.g.: Product No. 286 012 00, Spur Gear, Polyacetal, Module 2, 12 Teeth

Module 2.0 Tooth Width b = 15 mm

Product No. Polyacetal	Product No. Polyketone	Number of teeth	b mm	d_a mm	d mm	L mm	E mm	c mm	ND mm	B mm	perm. MT* Polyacetal Ncm	perm. MT* Polyketone Ncm	Weight Polyacetal g	Weight Polyketone g
286 012 00	**286 012 01**	12	15	28	24	27	-	-	18,5	8	78	82	11,7	10,5
286 013 00	**286 013 01**	13	15	30	26	27	-	-	18,5	8	91	96	12,9	11,6
286 014 00	**286 014 01**	14	15	32	28	27	-	-	18,5	8	103	108	15,0	13,4
286 015 00	**286 015 01**	15	15	34	30	27	-	-	18,5	8	116	122	15,9	14,3
286 016 00	**286 016 01**	16	15	36	32	27	22	6	17,5	8	130	137	16,7	15,0
286 017 00	**286 017 01**	17	15	38	34	27	24	6	17,5	8	134	141	17,7	15,8
286 018 00	**286 018 01**	18	15	40	36	27	25	6	17,5	8	155	163	19,4	17,4
286 019 00	**286 019 01**	19	15	42	38	27	27	6	17,5	8	178	187	20,8	18,7
286 020 00	**286 020 01**	20	15	44	40	27	28	6	20	10	202	212	24,6	22,1
286 021 00	**286 021 01**	21	15	46	42	27	28	6	20	10	227	238	27,0	24,2
286 022 00	**286 022 01**	22	15	48	44	27	28	6	20	10	255	268	30,3	27,2
286 023 00	**286 023 01**	23	15	50	46	27	35	6	24	10	284	298	32,6	29,2
286 024 00	**286 024 01**	24	15	52	48	27	35	6	24	10	315	331	35,4	31,8
286 025 00	**286 025 01**	25	15	54	50	27	35	6	24	10	347	364	39,2	35,2
286 026 00	**286 026 01**	26	15	56	52	27	38,5	6	24	10	382	401	39,3	35,2
286 027 00	**286 027 01**	27	15	58	54	27	38,5	6	24	10	418	439	42,7	38,3
286 028 00	**286 028 01**	28	15	60	56	27	38,5	6	24	10	457	480	46,5	41,7
286 030 00	**286 030 01**	30	15	64	60	27	43,5	6	24	10	539	566	50,1	44,9
286 032 00	**286 032 01**	32	15	68	64	27	44	6	26	10	629	660	59,7	53,6
286 035 00	**286 035 01**	35	15	74	70	27	54	6	26	12	780	819	61,7	55,3
286 036 00	**286 036 01**	36	15	76	72	27	54	6	26	12	834	876	65,5	58,7
286 038 00	**286 038 01**	38	15	80	76	27	61,5	6	26	12	949	996	66,5	59,7
286 040 00	**286 040 01**	40	15	84	80	27	61,5	6	26	12	1070	1130	77,4	69,4
286 042 00	**286 042 01**	42	15	88	84	27	61,5	6	26	12	1210	1270	87,0	78,0
286 045 00	**286 045 01**	45	15	94	90	27	68	6	30	14	1320	1390	99,1	88,9
286 048 00	**286 048 01**	48	15	100	96	27	74	6	30	14	1420	1490	109	97,7
286 050 00	**286 050 01**	50	15	104	100	27	78	6	30	14	1480	1560	116	104
286 055 00	**286 055 01**	55	15	114	110	27	87,5	6	30	14	1640	1720	134	120
286 060 00	**286 060 01**	60	15	124	120	27	97,5	6	30	14	1800	1890	155	139
286 070 00	**286 070 01**	70	15	144	140	27	117	6	30	14	2100	2210	196	176

Module 3.0 Tooth Width b = 19 mm

Product No. Polyacetal	Product No. Polyketone	Number of teeth	b mm	d_a mm	d mm	L mm	E mm	c mm	ND mm	B mm	perm. MT* Polyacetal Ncm	perm. MT* Polyketone Ncm	Weight Polyacetal g	Weight Polyketone g
288 012 00	**288 012 01**	12	19	42	36	34	-	-	24	12	240	252	30,4	27,3
288 013 00	**288 013 01**	13	19	45	39	34	-	-	24	12	280	294	35,0	31,4
288 014 00	**288 014 01**	14	19	48	42	34	-	-	24	12	320	336	39,9	35,8
288 015 00	**288 015 01**	15	19	51	45	34	30,5	8	24	12	370	389	40,4	36,3
288 016 00	**288 016 01**	16	19	54	48	34	30,5	8	24	12	400	420	46,5	41,7
288 017 00	**288 017 01**	17	19	57	51	34	30,5	8	24	12	420	441	51,7	46,4
288 018 00	**288 018 01**	18	19	60	54	34	38	8	24	12	490	515	52,2	46,8
288 019 00	**288 019 01**	19	19	63	57	34	38	8	24	12	560	588	58,9	52,8
288 020 00	**288 020 01**	20	19	66	60	34	38	8	24	12	640	672	65,7	58,9
288 021 00	**288 021 01**	21	19	69	63	34	45	8	24	12	720	756	65,8	59,0
288 022 00	**288 022 01**	22	19	72	66	34	45	8	24	12	810	851	73,3	65,8
288 023 00	**288 023 01**	23	19	75	69	34	52	8	24	12	900	945	74,5	66,8
288 024 00	**288 024 01**	24	19	78	72	34	52	8	24	12	1000	1050	82,5	74,0
288 025 00	**288 025 01**	25	19	81	75	34	58	8	28	14	1110	1170	88,2	79,1
288 026 00	**288 026 01**	26	19	84	78	34	58	8	28	14	1220	1280	97,6	87,6
288 027 00	**288 027 01**	27	19	87	81	34	58	8	28	14	1340	1410	108	96,4
288 028 00	**288 028 01**	28	19	90	84	34	65	8	28	14	1460	1530	108	96,4
288 030 00	**288 030 01**	30	19	96	90	34	68	8	28	14	1730	1820	123	110
288 032 00	**288 032 01**	32	19	102	96	34	69	8	32	16	2020	2120	148	133
288 033 00	**288 033 01**	33	19	105	99	34	69	8	32	16	2180	2290	160	144
288 035 00	**288 035 01**	35	19	111	105	34	78	8	32	16	2510	2640	170	153
288 038 00	**288 038 01**	38	19	120	114	34	87	8	32	16	3060	3210	189	170
288 040 00	**288 040 01**	40	19	126	120	34	93	8	32	16	3330	3500	209	187
288 045 00	**288 045 01**	45	19	141	135	34	108	8	32	16	3780	3970	255	228

Spur Gears Made from POM, White, with One-Sided Hub, Straight Tooth System, Milled Teeth

Tooth quality 10d DIN 58405.
Pressure angle 20°.
Untoleranced dimensions in accordance with DIN ISO 2768 middle.

Temperature limit: continuous 100°C, only short time 140°C.
Water absorption (satiable) 0.5% Cws.
Other material reference values page 821.

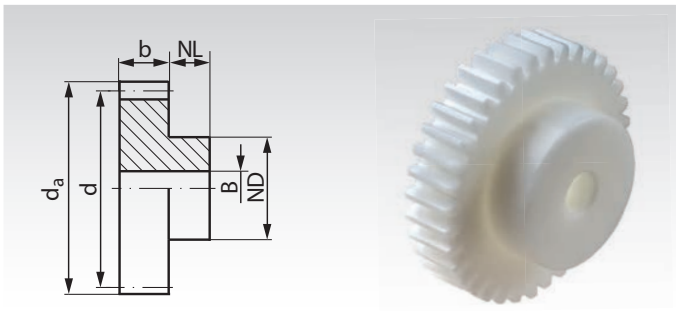

Ordering Details: e.g.: Product No. 291 010 00, Spur Gear, POM, Module 0.5, 10 Teeth

Module 0.5 Tooth Width b = 4 mm

Product No.	Number of teeth	b mm	d_a mm	d mm	NL mm	ND mm	B^{JS10} mm	perm. MT* Ncm	Weight g
291 010 00	10	4	6	5	4	3,5	2	0,7	0,12
291 012 00	12	4	7	6	4	4	2	1,0	0,18
291 013 00	13	4	7,5	6,5	4	5	2	1,2	0,25
291 014 00	14	4	8	7	4	5	2	1,3	0,28
291 015 00	15	4	8,5	7,5	4	6	3	1,5	0,28
291 016 00	16	4	9	8	4	6	3	1,6	0,34
291 017 00	17	4	9,5	8,5	4	6	3	1,7	0,36
291 018 00	18	4	10	9	4	6	3	1,9	0,42
291 019 00	19	4	10,5	9,5	4	8	3	2,2	0,57
291 020 00	20	4	11	10	4	8	3	2,5	0,63
291 021 00	21	4	11,5	10,5	4	8	3	2,8	0,66
291 022 00	22	4	12	11	4	8	3	3,2	0,71
291 023 00	23	4	12,5	11,5	4	8	3	3,5	0,80
291 024 00	24	4	13	12	4	8	3	3,9	0,80
291 025 00	25	4	13,5	12,5	4	10	3	4,3	0,90
291 026 00	26	4	14	13	4	10	3	4,7	1,10
291 027 00	27	4	14,5	13,5	4	10	3	5,1	1,10
291 028 00	28	4	15	14	4	10	3	5,6	1,20
291 030 00	30	4	16	15	4	10	3	6,5	1,40
291 032 00	32	4	17	16	4	12	4	7,6	1,60
291 035 00	35	4	18,5	17,5	4	12	4	9,3	1,70
291 036 00	36	4	19	18	4	12	4	10,0	1,80
291 038 00	38	4	20	19	4	12	4	11,3	2,10
291 040 00	40	4	21	20	4	12	4	12,7	2,20
291 042 00	42	4	22	21	4	12	4	14,2	2,40
291 045 00	45	4	23,5	22,5	4	12	4	16,7	2,70
291 048 00	48	4	25	24	4	12	4	19,3	3,00
291 050 00	50	4	26	25	4	15	4	21,0	3,00
291 052 00	52	4	27	26	4	15	4	23,0	3,80
291 054 00	54	4	28	27	4	15	4	25,0	4,00
291 055 00	55	4	28,5	27,5	4	15	4	26,5	4,20
291 056 00	56	4	29	28	4	15	4	27,0	4,30
291 060 00	60	4	31	30	5	15	4	29,0	5,00
291 064 00	64	4	33	32	5	18	5	31,0	6,00
291 065 00	65	4	33,5	32,5	5	18	5	32,0	6,30
291 070 00	70	4	36	35	5	18	5	34,0	6,80
291 072 00	72	4	37	36	5	18	5	35,5	7,10
291 075 00	75	4	38,5	37,5	5	18	5	37,0	7,70
291 080 00	80	4	41	40	5	18	5	39,5	8,40
291 085 00	85	4	43,5	42,5	5	25	5	41,9	11,50
291 090 00	90	4	46	45	5	25	5	44,0	12,20
291 096 00	96	4	49	48	5	25	5	47,0	13,00
291 100 00	100	4	51	50	5	25	5	49,0	14,30
291 114 00	114	4	58	57	5	25	5	55,0	17,60
291 120 00	120	4	61	60	5	25	5	58,0	18,60

* Basis of calculations see page 197.



Reworking within 24h-service possible. Custom made parts on request.

Spur Gears Made from POM, White, with One-Sided Hub, Straight Tooth System, Milled Teeth

Tooth quality 10d DIN 58405.
Pressure angle 20°.
Untoleranced dimensions in accordance with DIN ISO 2768 middle.

Temperature limit: continuous 100°C, only short time 140°C.
Water absorption (satiable) 0.5% Cws.
Other material reference values page 821.

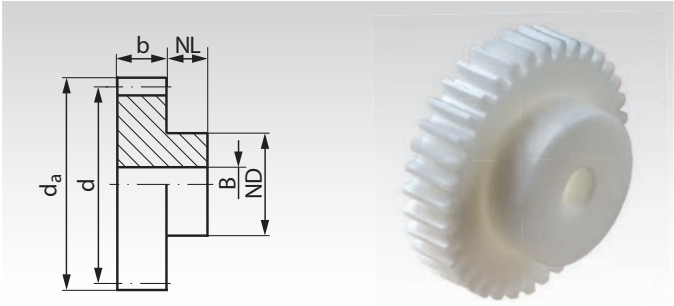

Ordering Details: e.g.: Product No. 292 010 00, Spur Gear, POM, Module 0.7, 10 Teeth

Module 0.7 Tooth Width b = 5 mm

Product No.	Number of teeth	b mm	d_a mm	d mm	NL mm	ND mm	B^{JS10} mm	perm. MT* Ncm	Weight g
292 010 00	10	5	8,4	7	6	5	3	1,9	0,30
292 012 00	12	5	9,8	8,4	6	6	3	2,6	0,50
292 013 00	13	5	10,5	9,1	6	7	3	3,0	0,65
292 014 00	14	5	11,2	9,8	6	8	3	3,4	0,85
292 015 00	15	5	11,9	10,5	6	8	3	3,8	0,88
292 016 00	16	5	12,6	11,2	6	8	3	4,3	0,95
292 017 00	17	5	13,3	11,9	6	8	3	4,4	1,00
292 018 00	18	5	14	12,6	6	10	3	5,1	1,40
292 019 00	19	5	14,7	13,3	6	10	3	5,8	1,40
292 020 00	20	5	15,4	14	6	10	4	6,6	1,50
292 021 00	21	5	16,1	14,7	6	10	4	7,4	1,60
292 022 00	22	5	16,8	15,4	6	12	4	8,2	2,10
292 023 00	23	5	17,5	16,1	6	12	4	9,2	2,10
292 024 00	24	5	18,2	16,8	6	12	4	10,1	2,20
292 025 00	25	5	18,9	17,5	6	12	4	11,2	2,40
292 026 00	26	5	19,6	18,2	6	12	4	12,2	2,50
292 027 00	27	5	20,3	18,9	6	12	4	13,4	2,70
292 028 00	28	5	21	19,6	6	12	4	14,6	2,80
292 030 00	30	5	22,4	21	6	15	4	17,1	3,60
292 032 00	32	5	23,8	22,4	6	15	4	20,0	4,10
292 035 00	35	5	25,9	24,5	6	15	4	24,5	4,50
292 036 00	36	5	26,6	25,2	6	15	4	26,0	4,70
292 038 00	38	5	28	26,6	6	15	4	29,5	5,20
292 040 00	40	5	29,4	28	6	15	4	33,5	5,50
292 042 00	42	5	30,8	29,4	6	20	5	37,5	7,10
292 045 00	45	5	32,9	31,5	6	20	5	44,0	7,80
292 048 00	48	5	35	33,6	6	20	5	51,0	8,20
292 050 00	50	5	36,4	35	6	20	5	56,0	9,00
292 052 00	52	5	37,8	36,4	6	20	5	61,5	9,60
292 054 00	54	5	39,2	37,8	6	20	5	65,0	9,00
292 055 00	55	5	39,9	38,5	6	20	5	66,0	8,50
292 056 00	56	5	40,6	39,2	6	20	5	67,5	10,60
292 060 00	60	5	43,4	42	8	20	5	72,5	12,70
292 064 00	64	5	46,2	44,8	8	20	5	77,5	14,40
292 065 00	65	5	46,9	45,5	8	20	5	79,0	14,60
292 070 00	70	5	50,4	49	8	20	5	85,0	16,30
292 072 00	72	5	51,8	50,4	8	20	6	87,0	17,00
292 075 00	75	5	53,9	52,5	8	20	6	90,5	18,10
292 080 00	80	5	57,4	56	8	20	6	96,5	20,10
292 085 00	85	5	60,9	59,5	8	20	6	101,5	22,20
292 090 00	90	5	64,4	63	8	20	6	109,0	24,70
292 096 00	96	5	68,6	67,2	8	25	8	116,0	29,20
292 100 00	100	5	71,4	70	8	25	8	121,0	30,50
292 114 00	114	5	81,2	79,8	8	25	8	137,5	39,80
292 120 00	120	5	85,4	84	8	25	8	144,5	43,20

* Basis of calculations see page 197.



Reworking within 24h-service possible. Custom made parts on request.

Spur Gears Made from POM, White, with One-Sided Hub, Straight Tooth System, Milled Teeth

Tooth quality 10d25 DIN 3967.
Pressure angle 20°.
Untoleranced dimensions in accordance with DIN ISO 2768 middle.

Temperature limit: continuous 100°C, only short time 140°C.
Water absorption (satiable) 0.5% Cws.
Other material reference values page 821.

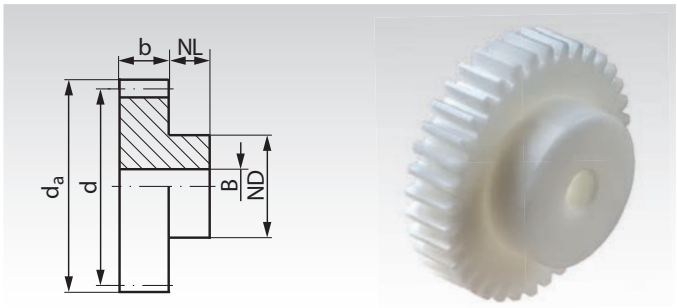

Ordering Details: e.g.: Product No. 293 010 00, Spur Gear, POM, Module 1, 10 Teeth

Module 1.0 Tooth Width b = 10 mm

Product No.	Number of teeth	b mm	d_a mm	d mm	NL mm	ND mm	B^{JS10} mm	perm. MT* Nm	Weight g
293 010 00	10	10	12	10	6	8	5	0,08	1,0
293 011 00	11	10	13	11	6	8	5	0,10	1,2
293 012 00	12	10	14	12	6	10	5	0,11	1,7
293 013 00	13	10	15	13	6	10	5	0,13	2,0
293 014 00	14	10	16	14	6	10	5	0,15	2,3
293 015 00	15	10	17	15	6	12	5	0,17	2,8
293 016 00	16	10	18	16	6	12	5	0,18	3,2
293 017 00	17	10	19	17	6	12	5	0,19	3,5
293 018 00	18	10	20	18	6	12	5	0,22	4,0
293 019 00	19	10	21	19	6	15	5	0,26	4,9
293 020 00	20	10	22	20	8	15	5	0,29	5,8
293 021 00	21	10	23	21	8	15	5	0,33	6,2
293 022 00	22	10	24	22	8	15	5	0,36	6,5
293 023 00	23	10	25	23	8	15	5	0,40	7,1
293 024 00	24	10	26	24	8	15	5	0,45	7,6
293 025 00	25	10	27	25	8	15	5	0,49	8,2
293 026 00	26	10	28	26	8	15	5	0,54	8,7
293 027 00	27	10	29	27	8	15	5	0,59	9,3
293 028 00	28	10	30	28	8	15	5	0,64	9,9
293 030 00	30	10	32	30	8	15	5	0,76	11,2
293 032 00	32	10	34	32	8	18	6	0,88	13,2
293 035 00	35	10	37	35	8	18	6	1,09	15,4
293 036 00	36	10	38	36	8	18	6	1,16	16,1
293 038 00	38	10	40	38	8	18	6	1,32	17,9
293 040 00	40	10	42	40	8	18	6	1,48	19,6
293 042 00	42	10	44	42	8	18	6	1,66	21,5
293 045 00	45	10	47	45	8	18	6	1,96	24,0
293 048 00	48	10	50	48	8	20	6	2,28	27,8
293 050 00	50	10	52	50	8	20	6	2,45	30,0
293 052 00	52	10	54	52	8	20	6	2,54	32,4
293 054 00	54	10	56	54	8	20	6	2,64	34,6
293 055 00	55	10	57	55	8	20	6	2,69	35,6
293 056 00	56	10	58	56	8	20	6	2,74	36,9
293 060 00	60	10	62	60	8	25	6	2,95	44,1
293 064 00	64	10	66	64	10	25	6	3,16	51,1
293 065 00	65	10	67	65	10	25	6	3,21	52,7
293 070 00	70	10	72	70	10	25	6	3,47	59,6
293 072 00	72	10	74	72	10	30	6	3,57	65,5
293 075 00	75	10	77	75	10	30	6	3,72	71,1
293 080 00	80	10	82	80	10	50	10	3,97	94,7
293 085 00	85	10	87	85	10	50	10	4,22	104,1
293 090 00	90	10	92	90	10	50	10	4,47	113,1
293 096 00	96	10	98	96	10	50	10	4,68	126,1
293 100 00	100	10	102	100	10	50	10	4,96	135,0
293 120 00	120	10	122	120	10	50	10	5,94	182,6

* Basis of calculations see page 197.



Reworking within 24h-service possible. Custom made parts on request.

Spur Gears Made from POM, White, with One-Sided Hub, Straight Tooth System, Milled Teeth

Tooth quality 10d25 DIN 3967.
Pressure angle 20°.
Untoleranced dimensions in accordance with DIN ISO 2768 midle.

Temperature limit: continuous 100°C, only short time 140°C.
Water absorption (satiable) 0.5% Cws.
Other material reference values page 821.

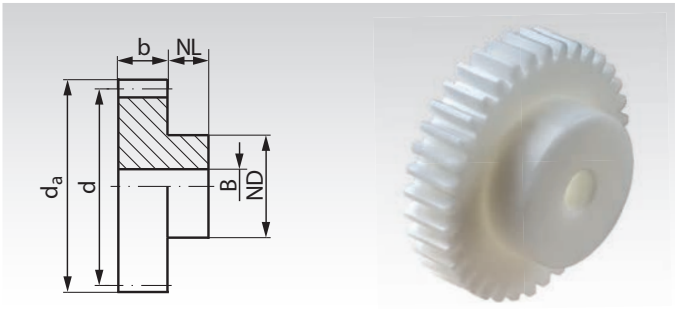

Ordering Details: e.g.: Product No. 294 010 00, Spur Gear, Delrin, Module 1.25, 10 Teeth

Module 1.25 Tooth Width b = 10 mm

Product No.	Number of teeth	b mm	d_a mm	d mm	NL mm	ND mm	B^{JS10} mm	perm. MT* Nm	Weight g
294 010 00	10	10	15	12,5	8	10	5	0,14	2,1
294 012 00	12	10	17,5	15	10	10	5	0,19	3,0
294 014 00	14	10	20	17,5	10	12	5	0,25	4,3
294 015 00	15	10	21,25	18,75	10	15	8	0,28	4,7
294 018 00	18	10	25	22,5	10	15	8	0,41	6,4
294 020 00	20	10	27,5	25	10	15	8	0,52	7,8
294 024 00	24	10	32,5	30	10	20	8	0,73	12,7
294 025 00	25	10	33,75	31,25	10	20	8	0,81	13,3
294 030 00	30	10	40	37,5	10	20	8	1,25	18,4
294 032 00	32	10	42,5	40	10	20	8	1,45	20,4
294 035 00	35	10	46,25	43,75	10	20	8	1,79	23,8
294 036 00	36	10	47,5	45	10	20	8	1,92	24,9
294 038 00	38	10	50	47,5	10	20	8	2,18	27,7
294 040 00	40	10	52,5	50	10	20	8	2,46	30,2
294 050 00	50	10	65	62,5	10	20	8	3,83	45,6

Module 1.5 Tooth Width b = 15 mm

Product No.	Number of teeth	b mm	d_a mm	d mm	NL mm	ND mm	B^{JS10} mm	perm. MT* Nm	Weight g
295 010 00	10	15	18	15	10	12	6	0,30	4,0
295 012 00	12	15	21	18	10	18	8	0,42	6,6
295 013 00	13	15	22,5	19,5	10	18	8	0,48	7,6
295 014 00	14	15	24	21	10	18	8	0,55	8,6
295 015 00	15	15	25,5	22,5	10	18	8	0,63	9,7
295 016 00	16	15	27	24	10	20	10	0,70	10,7
295 018 00	18	15	30	27	10	20	10	0,82	13,4
295 020 00	20	15	33	30	10	25	10	1,06	18,5
295 022 00	22	15	36	33	10	25	10	1,34	21,6
295 024 00	24	15	39	36	10	25	10	1,65	25,0
295 025 00	25	15	40,5	37,5	10	25	10	1,82	26,7
295 028 00	28	15	45	42	10	25	10	2,38	32,7
295 030 00	30	15	48	45	10	30	10	2,81	40,1
295 032 00	32	15	51	48	10	30	10	3,28	44,5
295 035 00	35	15	55,5	52,5	10	30	10	4,05	51,9
295 036 00	36	15	57	54	10	30	10	4,33	54,5
295 038 00	38	15	60	57	10	30	10	4,93	59,7
295 040 00	40	15	63	60	10	30	10	5,57	65,8
295 042 00	42	15	66	63	10	35	10	6,25	75,4
295 045 00	45	15	70,5	67,5	10	35	10	7,36	85,4
295 048 00	48	15	75	72	10	35	10	7,92	96,1
295 050 00	50	15	78	75	10	35	10	8,28	102
295 055 00	55	15	85,5	82,5	10	35	10	9,17	122
295 060 00	60	15	93	90	10	40	10	10,1	147
295 065 00	65	15	100,5	97,5	10	40	10	10,9	171
295 070 00	70	15	108	105	10	40	10	11,8	195
295 072 00	72	15	111	108	10	40	10	11,7	205
295 075 00	75	15	115,5	112,5	10	40	10	13,2	220
295 080 00	80	15	123	120	10	50	10	13,5	265
295 090 00	90	15	138	135	10	50	10	15,1	322
295 100 00	100	15	153	150	10	50	10	16,8	393
295 120 00	120	15	183	180	10	70	15	20,0	588

* Basis of calculations see page 197.



Reworking within 24h-service possible. Custom made parts on request.

Spur Gears Made from POM, White, with One-Sided Hub, Straight Tooth System, Milled Teeth

Tooth quality 10d25 DIN 3967.
Pressure angle 20°.
Untoleranced dimensions in accordance with DIN ISO 2768 m.

Temperature limit: continuous 100°C, only short time 140°C.
Water absorption (satiable) 0.5% Cws.
Other material reference values page 821.

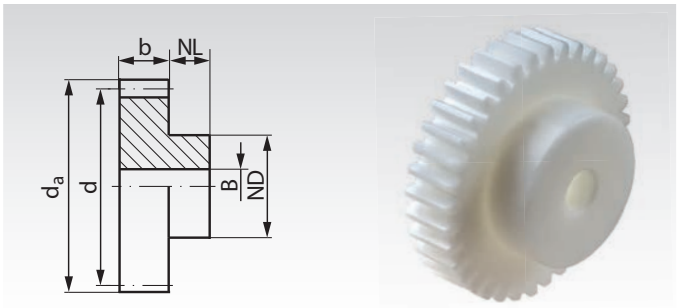

Ordering Details: e.g.: Product No. 296 010 00, Spur Gear, POM, Module 2.0, 10 Teeth

Module 2.0 Tooth Width b = 16 mm

Product No.	Number of teeth	b mm	d_a mm	d mm	NL mm	ND mm	B^{JS10} mm	perm. MT* Nm	Weight g
296 010 00	10	16	24	20	15	15	8	0,60	8,0
296 012 00	12	16	28	24	15	20	8	0,83	13,9
296 014 00	14	16	32	28	15	20	8	1,08	18,0
296 015 00	15	16	34	30	15	20	12	1,24	17,0
296 016 00	16	16	36	32	15	25	12	1,38	23,2
296 018 00	18	16	40	36	15	30	12	1,65	32,0
296 020 00	20	16	44	40	15	30	12	2,15	37,3
296 024 00	24	16	52	48	15	30	12	3,40	50,0
296 025 00	25	16	54	50	15	30	12	3,70	53,6
296 028 00	28	16	60	56	15	30	12	4,85	64,4
296 030 00	30	16	64	60	15	30	12	5,75	72,7
296 032 00	32	16	68	64	15	40	12	6,70	92,6
296 035 00	35	16	74	70	15	45	12	7,80	114
296 036 00	36	16	76	72	15	45	12	9,15	118
296 040 00	40	16	84	80	15	50	12	11,5	149
296 045 00	45	16	94	90	15	50	12	14,1	177
296 050 00	50	16	104	100	15	60	12	15,8	231
296 056 00	56	16	116	112	15	60	12	17,7	272
296 060 00	60	16	124	120	15	60	12	19,2	307
296 070 00	70	16	144	140	20	70	15	22,6	439
296 072 00	72	16	148	144	20	70	15	23,3	459
296 075 00	75	16	154	150	20	70	20	24,2	482
296 080 00	80	16	164	160	20	70	20	25,9	536
296 090 00	90	16	184	180	20	70	20	28,9	654
296 100 00	100	16	204	200	20	80	20	32,1	819
296 120 00	120	16	244	240	20	80	20	38,4	1125

* Basis of calculations see page 197.



Reworking within 24h-service possible. Custom made parts on request.

Spur Gears Made from POM, White, with One-Sided Hub, Straight Tooth System, Milled Teeth

Tooth quality 10d25 DIN 3967.
Pressure angle 20°.
Untoleranced dimensions in accordance with DIN ISO 2768m.

Temperature limit: continuous 100°C, only short time 140°C.
Water absorption (satiable) 0.5% Cws.
Other material reference values page 821.

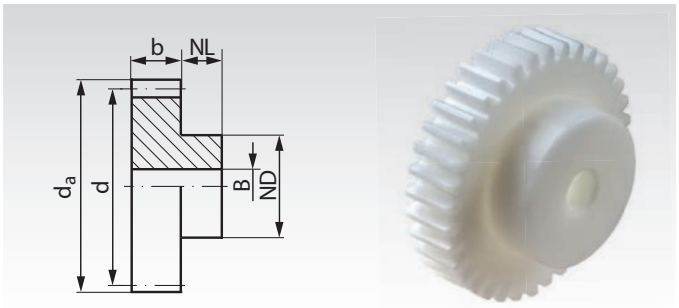

Ordering Details: e.g.: Product No. 297 010 00, Spur Gear, POM, Module 2.5, 10 Teeth

Module 2.5 Tooth Width b = 20 mm

Product No.	Number of teeth	b mm	d_a mm	d mm	NL mm	ND mm	B^{JS10} mm	perm. MT* Nm	Weight g
297 010 00	10	20	30	25	15	20	10	1,23	15,6
297 012 00	12	20	35	30	15	20	10	1,71	21,7
297 014 00	14	20	40	35	15	20	10	2,23	29,3
297 015 00	15	20	42,5	37,5	15	25	12	2,56	35,0
297 016 00	16	20	45	40	15	25	12	2,85	39,5
297 018 00	18	20	50	45	15	30	12	3,40	53,0
297 020 00	20	20	55	50	15	30	12	4,45	63,0
297 024 00	24	20	65	60	15	30	12	7,00	87,0
297 025 00	25	20	67,5	62,5	15	40	12	7,70	105
297 028 00	28	20	75	70	15	40	12	10,1	127
297 030 00	30	20	80	75	15	40	12	12,0	143
297 035 00	35	20	92,5	87,5	15	50	12	17,3	202
297 036 00	36	20	95	90	15	50	15	19,2	226
297 040 00	40	20	105	100	20	50	15	23,9	264
297 045 00	45	20	117,5	112,5	20	50	15	27,6	322
297 050 00	50	20	130	125	20	70	15	31,0	443
297 056 00	56	20	145	140	20	70	20	34,7	515
297 060 00	60	20	155	150	20	70	20	37,4	585
297 072 00	72	20	185	180	20	80	20	45,3	826
297 080 00	80	20	205	200	20	90	20	50,3	1029
297 090 00	90	20	230	225	20	100	20	56,7	1301
297 100 00	100	20	255	250	20	100	25	62,9	1549
297 120 00	120	20	305	300	20	120	25	75,3	2242

Module 3.0 Tooth Width b = 25 mm

Product No.	Number of teeth	b mm	d_a mm	d mm	NL mm	ND mm	B^{JS10} mm	perm. MT* Nm	Weight g
298 010 00	10	25	36	30	15	25	12	2,30	27
298 012 00	12	25	42	36	15	25	12	3,20	38
298 014 00	14	25	48	42	15	25	12	4,20	52
298 015 00	15	25	51	45	15	25	12	4,80	58
298 018 00	18	25	60	54	15	30	12	6,45	87
298 020 00	20	25	66	60	15	30	12	8,40	106
298 024 00	24	25	78	72	15	30	12	13,2	149
298 025 00	25	25	81	75	15	45	15	14,6	179
298 028 00	28	25	90	84	15	45	15	19,2	217
298 030 00	30	25	96	90	15	45	15	22,7	244
298 035 00	35	25	111	105	15	45	15	35,0	325
298 036 00	36	25	114	108	15	45	15	37,5	340
298 040 00	40	25	126	120	15	50	15	43,7	424
298 045 00	45	25	141	135	15	50	20	49,6	521
298 048 00	48	25	150	144	15	50	20	53,2	603
298 050 00	50	25	156	150	20	70	20	55,6	708
298 056 00	56	25	174	168	20	70	20	62,2	854
298 060 00	60	25	186	180	20	70	20	67,5	987

* Basis of calculations see page 197.



Reworking within 24h-service possible. Custom made parts on request.

Spur Gears made from POM, Black, wide Version, with One-Sided Hub, Straight Tooth System, Milled Teeth

Tooth quality 10d25 DIN 3967.
Pressure angle 20°.
Untoleranced dimensions in accordance with DIN ISO 2768 m.

Temperature limit: continuous 100°C, only short time 140°C.
Water absorption (satiable) 0.5% Cws.
Other material reference values page 821.

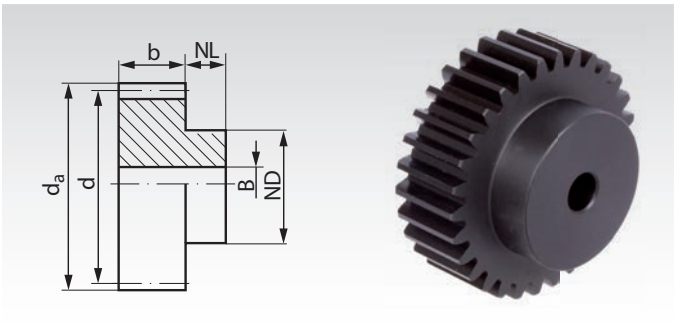

Order. Details: e.g.: Product No. 293 110 10, Spur Gear, POM black, Module 1, 10 Teeth

Module 1.0 Tooth Width b = 15 mm

Product No.	Number of teeth	b mm	d_a mm	d mm	NL mm	ND mm	B^{JS10} mm	perm. MT* Nm	Weight g
293 110 10	10	15	12	10	10	8	4	0,13	1,6
293 110 12	12	15	14	12	10	9	4	0,17	2,2
293 110 15	15	15	17	15	10	12	6	0,25	4,3
293 110 18	18	15	20	18	10	15	6	0,33	6,8
293 110 20	20	15	22	20	10	16	6	0,44	8,3
293 110 24	24	15	26	24	10	20	8	0,67	11,5
293 110 25	25	15	27	25	10	20	8	0,74	12,3
293 110 28	28	15	30	28	10	20	8	0,96	14,9
293 110 30	30	15	32	30	10	20	8	1,13	16,8
293 110 32	32	15	34	32	10	25	8	1,32	21,3
293 110 36	36	15	38	36	10	25	8	1,74	25,7
293 110 40	40	15	42	40	10	25	8	2,22	30,7
293 110 45	45	15	47	45	10	30	8	2,94	40,6
293 110 50	50	15	52	50	10	30	8	3,68	48,4
293 110 56	56	15	58	56	10	40	8	4,11	66,4
293 110 60	60	15	62	60	10	40	8	4,43	73,9
293 110 72	72	15	74	72	10	50	10	5,36	109
293 110 75	75	15	77	75	10	50	10	5,58	116
293 110 80	80	15	82	80	10	60	10	5,96	141
293 110 90	90	15	92	90	10	60	10	6,71	169
293 111 00	100	15	102	100	10	60	10	7,44	200

Module 1.5 Tooth Width b = 17 mm

Product No.	Number of teeth	b mm	d_a mm	d mm	NL mm	ND mm	B^{JS10} mm	perm. MT* Nm	Weight g
295 110 10	10	17	18	15	13	12	6	0,34	5,0
295 110 12	12	17	21	18	13	14	6	0,48	7,6
295 110 15	15	17	25,5	22,5	13	18	8	0,71	11,9
295 110 18	18	17	30	27	13	20	8	0,93	16,5
295 110 20	20	17	33	30	13	25	8	1,20	22,8
295 110 24	24	17	39	36	13	25	8	1,87	30,2
295 110 25	25	17	40,5	37,5	13	25	8	2,06	32,2
295 110 28	28	17	45	42	13	30	8	2,70	42,7
295 110 30	30	17	48	45	13	30	8	3,18	47,5
295 110 36	36	17	57	54	13	35	8	4,91	68,6
295 110 40	40	17	63	60	13	40	8	6,31	86,6
295 110 45	45	17	70,5	67,5	13	50	12	8,34	115
295 110 50	50	17	78	75	13	50	12	9,38	135
295 110 56	56	17	87	84	13	60	12	9,66	177
295 110 60	60	17	93	90	13	60	12	11,4	196
295 110 72	72	17	111	108	13	80	12	13,3	302
295 110 90	90	17	138	135	13	80	12	17,1	423

* Basis of calculations see page 197.



Reworking within 24h-service possible. Custom made parts on request.

Spur Gears made from POM, Black, wide Version, with One-Sided Hub, Straight Tooth System, Milled Teeth

Tooth quality 10d25 DIN 3967.
Pressure angle 20°.
Untoleranced dimensions in accordance with DIN ISO 2768 m.

Temperature limit: continuous 100°C, only short time 140°C.
Water absorption (satiable) 0.5% Cws.
Other material reference values page 821.

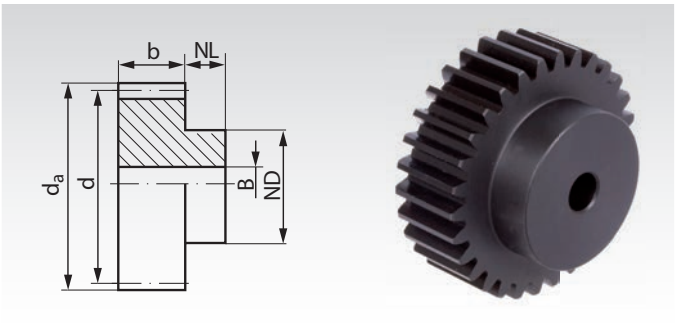

Order. Details: e.g.: Product No. 296 110 10, Spur Gear, POM black, Module 2, 10 Teeth

Module 2.0 Tooth Width b = 20 mm

Product No.	Number of teeth	b mm	d_a mm	d mm	NL mm	ND mm	B^{JS10} mm	perm. MT* Nm	Weight g
296 110 10	10	20	24	20	15	15	8	0,75	9,9
296 110 12	12	20	28	24	15	18	8	1,04	15,4
296 110 15	15	20	34	30	15	24	8	1,55	25,9
296 110 18	18	20	40	36	15	25	8	2,06	35,3
296 110 20	20	20	44	40	15	30	8	2,69	46,4
296 110 24	24	20	52	48	15	35	12	4,25	64,6
296 110 25	25	20	54	50	15	35	12	4,63	68,9
296 110 30	30	20	64	60	15	40	12	7,19	98,9
296 110 36	36	20	76	72	15	50	12	11,5	148
296 110 40	40	20	84	80	15	50	12	14,3	175
296 110 45	45	20	94	90	15	60	12	17,6	230
296 110 50	50	20	104	100	15	70	15	19,8	289
296 110 60	60	20	124	120	15	70	15	24,0	385
296 110 90	90	20	184	180	15	90	20	36,1	821

Module 2.5 Tooth Width b = 25 mm

Product No.	Number of teeth	b mm	d_a mm	d mm	NL mm	ND mm	B^{JS10} mm	perm. MT* Nm	Weight g
297 110 10	10	25	30	25	15	20	8	1,54	20,0
297 110 12	12	25	35	30	15	20	8	2,14	27,5
297 110 15	15	25	42,5	37,5	15	25	8	3,20	44,9
297 110 18	18	25	50	45	15	35	8	4,25	71,5
297 110 20	20	25	55	50	15	35	12	5,56	81,7
297 110 24	24	25	65	60	15	40	12	8,75	118
297 110 25	25	25	67,5	62,5	15	45	12	9,65	133
297 110 30	30	25	80	75	15	50	12	15,0	187
297 110 36	36	25	95	90	15	60	12	24,0	273
297 110 40	40	25	105	100	15	70	12	30,0	346
297 110 45	45	25	117,5	112,5	15	70	15	34,5	414
297 110 50	50	25	130	125	15	80	15	38,8	519
297 110 60	60	25	155	150	15	90	15	46,8	734

Module 3.0 Tooth Width b = 30 mm

Product No.	Number of teeth	b mm	d_a mm	d mm	NL mm	ND mm	B^{JS10} mm	perm. MT* Nm	Weight g
298 110 10	10	30	36	30	20	25	12	2,79	35,1
298 110 12	12	30	42	36	20	25	12	3,84	48,0
298 110 15	15	30	51	45	20	35	12	5,76	84,9
298 110 18	18	30	60	54	20	45	12	7,74	131
298 110 20	20	30	66	60	20	45	12	10,1	154
298 110 24	24	30	78	72	20	50	12	15,8	216
298 110 25	25	30	81	75	20	60	14	17,5	251
298 110 30	30	30	96	90	20	60	14	27,2	332
298 110 35	35	30	111	105	20	80	14	41,9	489
298 110 36	36	30	114	108	20	80	14	45,0	509
298 110 40	40	30	126	120	20	80	14	52,4	599
298 110 45	45	30	141	135	20	90	20	59,5	749
298 110 50	50	30	156	150	20	100	20	66,7	930
298 110 60	60	30	186	180	20	100	20	81,0	1253

* Basis of calculations see page 197.



Reworking within 24h-service possible. Custom made parts on request.

Spur Gears Made From Plastic with Steel Core, Milled, Straight Teeth

Material: Outer part: Plastic PA 12 G.
Steel core: Choice of steel or stainless steel 1.4305.

STAINLESS

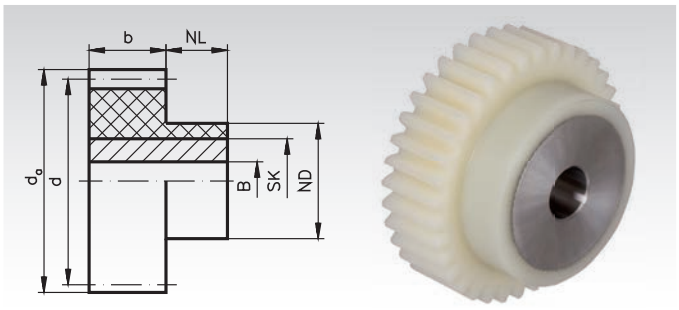

Tooth quality 8e25 DIN 3967.
Temperature range -60°C to +120° C, short periods 150° C.

- Special plastic with excellent material properties.
- Enables snugly fitting, high strength shaft-hub connection.
- Optimal force transmission due to cylindrical contact area.
- Light, silent and clean, with excellent dry running properties.

Ordering Details: e.g.: Product No. 218 550 25, spur gear, module 1.5, 25 teeth

Module 1.5 Tooth width b = 17 mm

Product No. Steel Core	Product No. Stainless Core	Number of teeth	b mm	d_a mm	d mm	NL mm	ND mm	SK mm	B^{H7} mm	perm.MD* Nm	Weight g
218 550 25	**218 950 25**	25	17	40,5	37,5	13	33	25	10	2,1	112
218 550 30	**218 950 30**	30	17	48	45	13	35	25	10	3,2	122
218 550 32	**218 950 32**	32	17	51	48	13	35	25	10	3,7	125
218 550 36	**218 950 36**	36	17	57	54	13	45	35	10	4,9	238
218 550 40	**218 950 40**	40	17	63	60	13	50	40	10	6,3	312
218 550 45	**218 950 45**	45	17	70,5	67,5	13	50	40	10	8,3	325
218 550 48	**218 950 48**	48	17	75	72	13	55	45	10	9,0	407
218 550 50	**218 950 50**	50	17	78	75	13	55	45	10	9,4	413
218 550 56	**218 950 56**	56	17	87	84	13	65	55	15	10,6	582
218 550 60	**218 950 60**	60	17	93	90	13	70	60	15	11,4	695
218 550 64	**218 950 64**	64	17	99	96	13	70	60	15	12,2	710
218 550 70	**218 950 70**	70	17	108	105	13	70	60	15	13,4	735
218 550 72	**218 950 72**	72	17	111	108	13	80	70	15	13,8	967
218 550 80	**218 950 80**	80	17	123	120	13	85	75	20	15,3	1096
218 550 90	**218 950 90**	90	17	138	135	13	90	80	20	17,1	1281
218 551 00	**218 951 00**	100	17	153	150	13	110	90	20	19,0	1652
218 551 20	**218 951 20**	120	17	183	180	13	120	90	20	22,7	2114

Module 2.0 Tooth width b = 20 mm

Product No. Steel core	Product No. Stainless Core	Number of teeth	b mm	d_a mm	d mm	NL mm	ND mm	SK mm	B^{H7} mm	perm.MD* Nm	Weight g
231 550 18	**231 950 18**	18	20	40	36	15	31	25	10	2,1	127
231 550 20	**231 950 20**	20	20	44	40	15	35	25	10	2,7	135
231 550 24	**231 950 24**	24	20	52	48	15	40	30	10	4,2	189
231 550 25	**231 950 25**	25	20	54	50	15	45	35	10	4,6	271
231 550 28	**231 950 28**	28	20	60	56	15	45	35	15	6,1	254
231 550 30	**231 950 30**	30	20	64	60	15	50	40	15	7,2	338
231 550 32	**231 950 32**	32	20	68	64	15	50	40	15	8,4	345
231 550 35	**231 950 35**	35	20	74	70	15	55	45	15	10,4	444
231 550 36	**231 950 36**	36	20	76	72	15	55	45	15	11,1	448
231 550 40	**231 950 40**	40	20	84	80	15	65	55	20	14,3	631
231 550 45	**231 950 45**	45	20	94	90	15	70	60	20	17,6	774
231 550 48	**231 950 48**	48	20	100	96	15	70	60	20	19,0	792
231 550 50	**231 950 50**	50	20	104	100	15	75	65	20	19,8	930
231 550 56	**231 950 56**	56	20	116	112	15	80	70	20	23,8	1105
231 550 60	**231 950 60**	60	20	124	120	15	85	75	20	24,0	1280
231 550 64	**231 950 64**	64	20	132	128	15	90	80	20	25,7	1467
231 550 70	**231 950 70**	70	20	144	140	15	90	80	25	28,1	1469
231 550 72	**231 950 72**	72	20	148	144	15	90	80	25	28,8	1487
231 550 80	**231 950 80**	80	20	164	160	15	100	90	25	32,0	1905
231 550 90	**231 950 90**	90	20	184	180	15	110	90	25	36,1	2393
231 551 00	**231 951 00**	100	20	204	200	15	120	110	25	40,1	2933
231 551 20	**231 951 20**	120	20	244	240	15	130	120	25	47,8	3671

* Basis of calculations see page 197.

On request:
Other versions and components made from PA 6 G / PA 12 G without core or with aluminium core.

Plastic PA 12 G

Produced using the vertical casting process.
High-molecular, high crystalline and almost stress free.
Very low moisture absorption, excellent dimensional stability.
High viscosity even at very low temperatures.
Very good mechanical and chemical resistance.

Steel core

Core with cylindrical body surface, knurled, permanently cast-in.
As standard made from normal steel or 1.4305.
On request in aluminium.
Bore tolerance H7, finished after casting.
The steel core allows the transfer of high torque even for small shaft diameters and correspondingly small parallel key connections.

Spur Gears Made From Plastic with Steel Core, Milled, Straight Teeth

Material: Outer part: Plastic PA 12 G.
Steel core: Choice of steel or stainless steel 1.4305.

STAINLESS

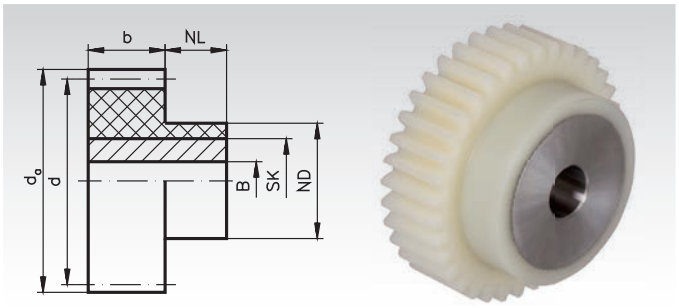

Tooth quality 8e25 DIN 3967.
Temperature range -60°C to +120° C, short periods 150° C.

- Special plastic with excellent material properties.
- Enables snugly fitting, high strength shaft-hub connection.
- Optimal force transmission due to cylindrical contact area.
- Light, silent and clean, with excellent dry running properties.

Ordering Details: e.g.: Product No. 232 550 15, spur gear, module 2,5, 15 teeth

Module 2.5 Tooth width b = 25 mm

Product No. Steel Core	Product No. Stainless Core	Number of teeth	b mm	d_a mm	d mm	NL mm	ND mm	SK mm	B^{H7} mm	perm.MD* Nm	Weight g
232 550 15	232 950 15	15	25	42,5	37,5	15	31	25	10	3,2	148
232 550 18	232 950 18	18	25	50	45	15	35	25	10	4,3	164
232 550 20	232 950 20	20	25	55	50	15	45	35	15	5,6	280
232 550 24	232 950 24	24	25	65	60	15	50	40	15	8,8	388
232 550 25	232 950 25	25	25	67,5	62,5	15	50	40	15	9,6	394
232 550 30	232 950 30	30	25	80	75	15	55	45	15	15,0	525
232 550 32	232 950 32	32	25	85	80	15	65	55	15	17,6	768
232 550 36	232 950 36	36	25	95	90	15	70	60	15	22,8	933
232 550 40	232 950 40	40	25	105	100	15	75	65	20	29,9	1070
232 550 45	232 950 45	45	25	117,5	112,5	15	80	70	20	34,5	1276
232 550 48	232 950 48	48	25	125	120	15	85	75	20	35,3	1475
232 550 50	232 950 50	50	25	130	125	15	85	75	20	38,8	1499
232 550 60	232 950 60	60	25	155	150	15	100	90	20	46,8	2197
232 550 70	232 950 70	70	25	180	175	15	100	90	20	54,8	2358
232 550 72	232 950 72	72	25	185	180	15	110	90	20	56,1	2824
232 550 80	232 950 80	80	25	205	200	15	120	110	20	62,2	3451

Module 3.0 Tooth width b = 30 mm

Product No. Steel Core	Product No. Stainless Core	Number of teeth	b mm	d_a mm	d mm	NL mm	ND mm	SK mm	B^{H7} mm	perm.MD* Nm	Weight g
233 550 15	233 950 15	15	30	51	45	20	35	25	10	5,8	204
233 550 18	233 950 18	18	30	60	54	20	45	35	10	7,7	398
233 550 20	233 950 20	20	30	66	60	20	45	35	15	10,1	376
233 550 24	233 950 24	24	30	78	72	20	55	45	15	15,8	643
233 550 25	233 950 25	25	30	81	75	20	55	45	15	17,5	654
233 550 30	233 950 30	30	30	96	90	20	70	60	15	27,2	1163
233 550 36	233 950 36	36	30	114	108	20	80	70	20	42,0	1565
233 550 40	233 950 40	40	30	126	120	20	85	75	20	52,4	1837
233 550 45	233 950 45	45	30	141	135	20	85	75	20	59,5	1927
233 550 48	233 950 48	48	30	150	144	20	90	80	20	63,8	2208
233 550 50	233 950 50	50	30	156	150	20	100	90	20	66,7	2734
233 550 60	233 950 60	60	30	186	180	20	100	90	20	81,0	2969

Module 4.0 Tooth width b = 40 mm

Product No. Steel Core	Product No. Stainless Core	Number of teeth	b mm	d_a mm	d mm	NL mm	ND mm	SK mm	B^{H7} mm	perm.MD* Nm	Weight g
234 550 12	234 950 12	12	40	56	48	20	35	25	10	8,1	256
234 550 15	234 950 15	15	40	68	60	20	50	40	20	12,1	519
234 550 16	234 950 16	16	40	72	64	20	50	40	20	13,5	535
234 550 20	234 950 20	20	40	88	80	20	65	55	20	20,9	1100
234 550 24	234 950 24	24	40	104	96	20	75	65	20	33,4	1588
234 550 25	234 950 25	25	40	108	100	20	75	65	20	38,4	1613
234 550 30	234 950 30	30	40	128	120	20	85	75	20	66,1	2227
234 550 36	234 950 36	36	40	152	144	20	100	90	30	98,7	3081
234 550 40	234 950 40	40	40	168	160	20	100	90	30	120,4	3234
234 550 45	234 950 45	45	40	188	180	20	110	90	30	135,6	4092
234 550 50	234 950 50	50	40	208	200	20	120	110	30	153,0	5042
234 550 60	234 950 60	60	40	248	240	20	130	120	30	185,8	6376

* Basis of calculations see page 197.

Spur Gears Made from Brass, Milled Teeth, Straight Tooth System

Material: Ms58 (2.0401).

Tooth quality 8d DIN 58405.
Pressure angle 20°.

Up to 30 teeth without hub.
From 40 teeth with one-sided hub.

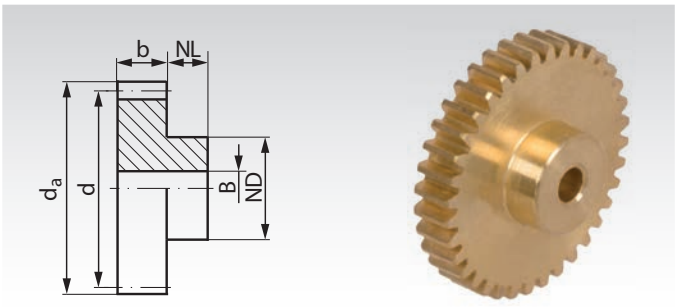

Ordering Details: e.g.: Product No. 260 010 00, Spur Gear Ms, Module 0.3, 10 Teeth

Module 0.3

Product No.	Number of teeth	b** mm	d_a mm	d mm	NL mm	ND mm	B^{H7} mm	perm. MT* Ncm	Weight g
260 010 00	10	5	3,6	3	-	-	1,0	0,14	0,1
260 012 00	12	5	4,2	3,6	-	-	1,5	0,18	0,2
260 014 00	14	5	4,8	4,2	-	-	2,0	0,23	0,4
260 015 00	15	5	5,1	4,5	-	-	2,0	0,25	0,5
260 016 00	16	5	5,4	4,8	-	-	2,0	0,27	0,6
260 018 00	18	5	6,0	5,4	-	-	2,0	0,36	0,8
260 020 00	20	5	6,6	6	-	-	2,0	0,40	1,0
260 022 00	22	5	7,2	6,6	-	-	2,0	0,49	1,3
260 024 00	24	5	7,8	7,2	-	-	2,0	0,60	1,4
260 025 00	25	5	8,1	7,5	-	-	2,0	0,65	1,6
260 030 00	30	5	9,6	9	-	-	2,0	1,00	2,3
260 040 00	40	2	12,6	12	3	10	3,0	1,85	3,5
260 050 00	50	2	15,6	15	5	10	3,0	3,00	5,7
260 060 00	60	2	18,6	18	5	10	3,0	4,50	6,9
260 080 00	80	2	24,6	24	5	15	3,0	8,50	14,7
260 100 00	100	2	30,6	30	5	15	3,0	14,0	18,5
260 120 00	120	2	36,6	36	5	15	3,0	21,0	23,7

* Basis of calculations see page 197.

** Up to a No. of Teeth of 30 the teeth run over the entire width of the gear.



Reworking within 24h-service possible. Custom made parts on request.

Spur Gears Made from Brass, with One-Sided Hub, Milled Teeth, Straight Tooth System

Material: Ms58 (2.0401).

Tooth quality 8d DIN 58405.
Pressure angle 20°.

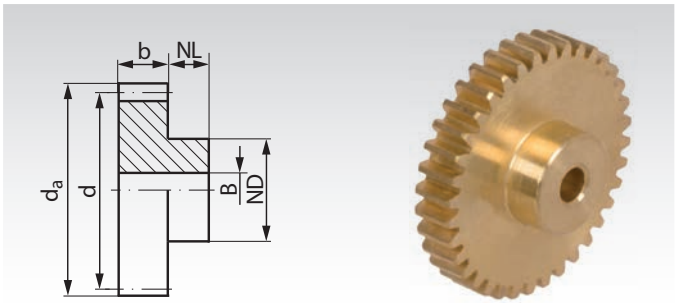

Ordering Details: e.g.: Product No. 261 010 00, Spur Gear, Ms58, Module 0.5, 10 Teeth

Module 0.5 Tooth Width b = 2 mm

Product No.	Number of teeth	b mm	d_a mm	d mm	NL mm	ND mm	B^{H7} mm	perm. MT* Ncm	Weight g
261 010 00	10	2	6	5	4	4	2	0,42	0,5
261 012 00	12	2	7	6	4	4	2	0,55	0,7
261 013 00	13	2	7,5	6,5	4	5	2	0,62	1,0
261 014 00	14	2	8	7	4	5	2	0,69	1,1
261 015 00	15	2	8,5	7,5	4	6	2	0,75	1,4
261 016 00	16	2	9	8	4	6	2	0,80	1,5
261 017 00	17	2	9,5	8,5	4	7	2	0,83	2,0
261 018 00	18	2	10	9	4	7	2	0,94	2,2
261 019 00	19	2	10,5	9,5	4	8	2	1,07	2,8
261 020 00	20	2	11	10	4	8	2	1,20	2,8
261 021 00	21	2	11,5	10,5	4	8	2	1,34	2,7
261 022 00	22	2	12	11	4	8	2	1,49	3,1
261 023 00	23	2	12,5	11,5	4	10	2	1,65	4,1
261 024 00	24	2	13	12	4	10	2	1,80	4,3
261 025 00	25	2	13,5	12,5	4	10	2	2,00	4,6
261 026 00	26	2	14	13	4	10	3	2,20	4,4
261 027 00	27	2	14,5	13,5	4	10	3	2,40	4,5
261 028 00	28	2	15	14	4	10	3	2,60	4,8
261 030 00	30	2	16	15	4	10	3	3,00	5,2
261 032 00	32	2	17	16	4	10	3	3,50	5,6
261 035 00	35	2	18,5	17,5	4	12	3	4,20	7,3
261 036 00	36	2	19	18	4	12	3	4,50	7,7
261 038 00	38	2	20	19	4	12	3	5,10	8,0
261 040 00	40	2	21	20	4	12	3	5,70	8,6
261 042 00	42	2	22	21	4	12	3	6,30	8,9
261 045 00	45	2	23,5	22,5	4	12	3	7,40	9,9
261 048 00	48	2	25	24	4	12	3	8,50	10,7
261 050 00	50	2	26	25	4	12	3	9,30	11,4
261 052 00	52	2	27	26	4	12	3	10,2	12,1
261 054 00	54	2	28	27	4	12	3	11,1	13,0
261 055 00	55	2	28,5	27,5	4	12	3	11,5	13,2
261 056 00	56	2	29	28	4	12	3	12,0	13,7
261 060 00	60	2	31	30	4	12	3	14,0	15,4
261 064 00	64	2	33	32	4	15	3	16,0	18,7
261 065 00	65	2	33,5	32,5	4	15	3	16,7	19,0
261 070 00	70	2	36	35	4	15	3	19,7	21,3
261 072 00	72	2	37	36	4	15	3	21,0	22,4
261 075 00	75	2	38,5	37,5	4	15	3	23,0	23,7
261 080 00	80	2	41	40	4	15	3	26,5	26,2
261 085 00	85	2	43,5	42,5	4	15	3	30,5	29,1
261 090 00	90	2	46	45	4	15	3	34,5	32,3
261 096 00	96	2	49	48	4	15	3	40,0	36,1
261 100 00	100	2	51	50	4	15	3	44,0	39,4
261 114 00	114	2	58	57	4	15	3	62,0	47,5
261 120 00	120	2	61	60	4	25	3	72,0	62,8

* Basis of calculations see page 197.



Reworking within 24h-service possible. Custom made parts on request.

Spur Gears Made from Brass, with One-Sided Hub, Milled Teeth, Straight Tooth System

Material: Ms58 (2.0401).

Tooth quality 8d DIN 58405.
Pressure angle 20°.

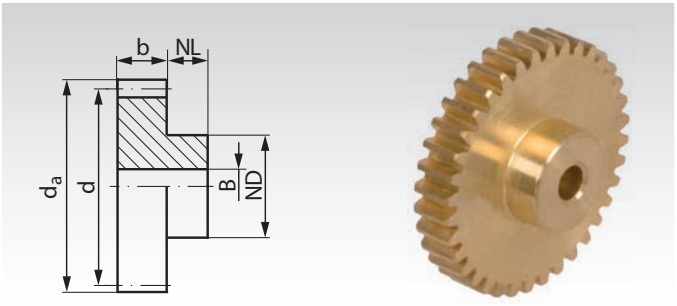

Ordering Details: e.g.: Product No. 262 010 00, Spur Gear, Ms58, Module 0.7, 10 Teeth

Module 0.7 Tooth Width b = 4 mm

Product No.	Number of teeth	b mm	d_a mm	d mm	NL mm	ND mm	B^{H7} mm	perm. MT* Ncm	Weight g
262 010 00	10	4	8,4	7	6	5	3	1,7	1,6
262 012 00	12	4	9,8	8,4	6	8	3	2,3	3,3
262 013 00	13	4	10,5	9,1	6	8	3	2,6	4,0
262 014 00	14	4	11,2	9,8	6	8	3	2,8	4,4
262 015 00	15	4	11,9	10,5	6	8	3	3,1	4,8
262 016 00	16	4	12,6	11,2	6	9	3	3,3	5,8
262 017 00	17	4	13,3	11,9	6	10	3	3,5	7,0
262 018 00	18	4	14	12,6	6	10	4	3,9	6,9
262 019 00	19	4	14,7	13,3	6	10	4	4,4	7,4
262 020 00	20	4	15,4	14	6	10	4	5,0	7,9
262 021 00	21	4	16,1	14,7	6	12	4	5,6	10,2
262 022 00	22	4	16,8	15,4	6	12	4	6,2	10,7
262 023 00	23	4	17,5	16,1	6	12	4	6,9	11,2
262 024 00	24	4	18,2	16,8	6	12	4	7,6	12,0
262 025 00	25	4	18,9	17,5	6	12	4	8,3	12,6
262 026 00	26	4	19,6	18,2	6	12	4	9,1	13,2
262 027 00	27	4	20,3	18,9	6	12	4	9,9	13,9
262 028 00	28	4	21	19,6	6	12	4	10,8	14,7
262 030 00	30	4	22,4	21	6	12	4	12,6	16,1
262 032 00	32	4	23,8	22,4	6	12	4	14,5	17,7
262 035 00	35	4	25,9	24,5	6	12	4	17,7	20,0
262 036 00	36	4	26,6	25,2	6	12	4	18,9	21,5
262 038 00	38	4	28	26,6	6	12	4	21,3	22,9
262 040 00	40	4	29,4	28	6	12	5	24,0	24,3
262 042 00	42	4	30,8	29,4	6	12	5	26,5	26,6
262 045 00	45	4	32,9	31,5	6	12	5	31,0	29,8
262 048 00	48	4	35	33,6	6	15	5	36,0	36,5
262 050 00	50	4	36,4	35	6	15	5	39,0	39,1
262 052 00	52	4	37,8	36,4	6	15	5	43,0	41,1
262 054 00	54	4	39,2	37,8	6	15	5	47,0	44,4
262 055 00	55	4	39,9	38,5	6	15	5	49,0	45,8
262 056 00	56	4	40,6	39,2	6	15	5	51,0	47,4
262 060 00	60	4	43,4	42	8	15	5	59,0	56,0
262 064 00	64	4	46,2	44,8	8	15	5	69,0	62,2
262 065 00	65	4	46,9	45,5	8	15	5	71,0	63,7
262 070 00	70	4	50,4	49	8	18	5	84,0	77,8
262 072 00	72	4	51,8	50,4	8	18	5	90,0	80,8
262 075 00	75	4	53,9	52,5	8	18	5	98,0	87,6
262 080 00	80	4	57,4	56	8	18	5	114	97,7
262 085 00	85	4	60,9	59,5	8	20	6	130	109,7
262 090 00	90	4	64,4	63	8	20	6	154	119,9
262 096 00	96	4	68,6	67,2	8	25	6	186	149,6
262 100 00	100	4	71,4	70	8	25	6	210	157,2
262 114 00	114	4	81,2	79,8	8	25	6	310	192,0
262 120 00	120	4	85,4	84	8	25	6	350	216,7

* Basis of calculations see page 197.



Reworking within 24h-service possible. Custom made parts on request.

Spur Gears Made from Brass, with One-Sided Hub, Milled Teeth, Straight Tooth System

Material: Ms58 (2.0401).

Tooth quality 8d25 DIN 3967.
Pressure angle 20°.

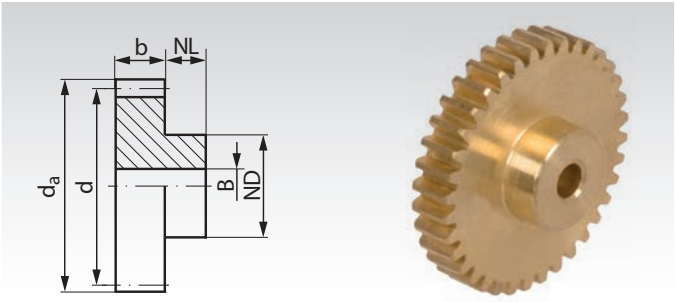

Ordering Details: e.g.: Product No. 263 010 00, Spur Gear, Ms58, Module 1, 10 Teeth

Module 1.0 Tooth Width b = 6.5 mm

Product No.	Number of teeth	b mm	d_a mm	d mm	NL mm	ND mm	B^{H7} mm	perm. MT* Ncm	Weight g
263 010 00	10	6,5	12	10	6	8	4	6,1	5,1
263 012 00	12	6,5	14	12	6	10	4	8,0	8,4
263 013 00	13	6,5	15	13	6	10	5	9,1	8,7
263 014 00	14	6,5	16	14	6	10	5	10,0	9,9
263 015 00	15	6,5	17	15	6	12	5	11,1	12,9
263 016 00	16	6,5	18	16	6	12	5	11,8	14,2
263 017 00	17	6,5	19	17	6	12	5	12,2	15,7
263 018 00	18	6,5	20	18	6	12	5	13,8	17,1
263 019 00	19	6,5	21	19	6	15	5	15,8	21,8
263 020 00	20	6,5	22	20	6	15	5	17,8	23,3
263 021 00	21	6,5	23	21	6	15	5	20,0	27,0
263 022 00	22	6,5	24	22	6	15	5	22,2	27,1
263 023 00	23	6,5	25	23	6	15	5	24,5	28,8
263 024 00	24	6,5	26	24	6	15	5	27,0	31,2
263 025 00	25	6,5	27	25	6	15	5	30,0	33,1
263 026 00	26	6,5	28	26	6	15	5	32,5	35,1
263 027 00	27	6,5	29	27	6	15	5	35,5	37,5
263 028 00	28	6,5	30	28	6	15	5	38,5	39,9
263 030 00	30	6,5	32	30	6	15	5	45,0	44,7
263 032 00	32	6,5	34	32	6	15	5	52,0	50,6
263 035 00	35	6,5	37	35	6	15	5	64,0	58,9
263 036 00	36	6,5	38	36	6	15	5	68,0	61,3
263 038 00	38	6,5	40	38	6	18	5	77,0	72,0
263 040 00	40	6,5	42	40	6	18	6	86,0	77,5
263 042 00	42	6,5	44	42	6	18	6	96,0	84,7
263 045 00	45	6,5	47	45	8	18	6	113	99,4
263 048 00	48	6,5	50	48	8	18	6	130	110,4
263 050 00	50	6,5	52	50	8	18	6	143	119,8
263 052 00	52	6,5	54	52	8	18	6	156	127,8
263 054 00	54	6,5	56	54	8	18	6	170	138,3
263 055 00	55	6,5	57	55	8	18	6	177	141,8
263 056 00	56	6,5	58	56	8	18	6	185	146,9
263 060 00	60	6,5	62	60	8	18	6	216	166,6
263 064 00	64	6,5	66	64	8	18	6	250	187,2
263 065 00	65	6,5	67	65	8	18	6	259	195,0
263 070 00	70	6,5	72	70	8	20	6	317	229,2
263 072 00	72	6,5	74	72	10	20	6	345	241,9
263 075 00	75	6,5	77	75	10	40	8	389	335,9
263 080 00	80	6,5	82	80	10	40	8	469	367,5
263 085 00	85	6,5	87	85	12	40	8	560	423,6
263 090 00	90	6,5	92	90	12	40	8	685	466,8
263 096 00	96	6,5	98	96	12	40	8	800	505,6
263 100 00	100	6,5	102	100	12	50	10	880	609,9
263 120 00	120	6,5	122	120	12	50	10	1190	806,5

* Basis of calculations see page 197.



Reworking within 24h-service possible. Custom made parts on request.

Spur Gears Made from Steel, with One-Sided Hub, Milled Teeth, Straight Tooth System

Material: 11SMnPb30.

Tooth quality 8d DIN 58405.
Pressure angle 20°.

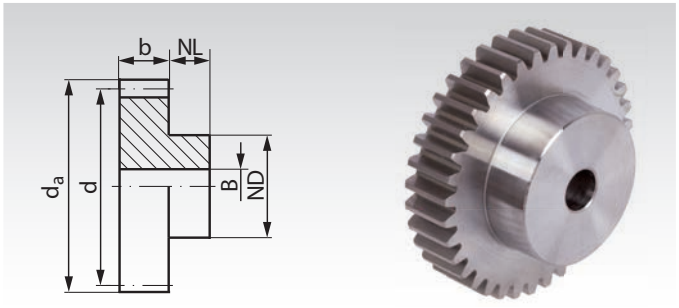

Ordering Details: e.g.: Product No. 211 010 00, Spur Gear, 11SMnPb30 , Module 0.5, 10 Teeth

Module 0.5 Tooth Width b = 4 mm

Product No.	Number of teeth	b mm	d_a mm	d mm	NL mm	ND mm	B^{H7} mm	perm. MT* Ncm	Weight g
211 010 00	10	4	6	5	4	4	2	0,8	0,8
211 012 00	12	4	7	6	4	4	2	1,0	1
211 013 00	13	4	7,5	6,5	4	5	2	1,1	1
211 014 00	14	4	8	7	4	5	2	1,2	2
211 015 00	15	4	8,5	7,5	4	6	3	1,4	2
211 016 00	16	4	9	8	4	6	3	1,5	2
211 017 00	17	4	9,5	8,5	4	6	3	1,6	2
211 018 00	18	4	10	9	4	6	3	1,7	2
211 019 00	19	4	10,5	9,5	4	8	3	1,9	3
211 020 00	20	4	11	10	4	8	3	2,2	3
211 021 00	21	4	11,5	10,5	4	8	3	2,4	4
211 022 00	22	4	12	11	4	8	3	2,7	4
211 023 00	23	4	12,5	11,5	4	8	3	3,0	4
211 024 00	24	4	13	12	4	8	3	3,3	4
211 025 00	25	4	13,5	12,5	4	10	4	3,6	5
211 026 00	26	4	14	13	4	10	4	4,0	5
211 027 00	27	4	14,5	13,5	4	10	4	4,3	5
211 028 00	28	4	15	14	4	10	4	4,7	6
211 030 00	30	4	16	15	4	10	4	5,5	7
211 032 00	32	4	17	16	4	12	4	6,3	9
211 035 00	35	4	18,5	17,5	4	12	4	7,7	10
211 036 00	36	4	19	18	4	12	4	8,2	10
211 038 00	38	4	20	19	4	12	4	9,2	11
211 040 00	40	4	21	20	4	12	4	10,3	12
211 042 00	42	4	22	21	4	15	5	11,5	14
211 045 00	45	4	23,5	22,5	4	15	5	13,4	16
211 048 00	48	4	25	24	4	15	5	15,5	18
211 050 00	50	4	26	25	4	15	5	17,0	19
211 052 00	52	4	27	26	4	15	5	18,5	20
211 054 00	54	4	28	27	4	15	5	20,2	22
211 055 00	55	4	28,5	27,5	4	15	5	21,0	23
211 056 00	56	4	29	28	4	15	5	21,9	23
211 060 00	60	4	31	30	4	20	5	25,5	30
211 064 00	64	4	33	32	4	20	5	29,4	33
211 065 00	65	4	33,5	32,5	4	20	5	30,5	33
211 070 00	70	4	36	35	4	20	5	36,0	39
211 072 00	72	4	37	36	4	20	5	38,3	40
211 075 00	75	4	38,5	37,5	4	20	5	42,0	42
211 080 00	80	4	41	40	4	20	5	48,5	47
211 085 00	85	4	43,5	42,5	4	25	6	55,6	57
211 090 00	90	4	46	45	4	25	6	63,2	62
211 096 00	96	4	49	48	4	25	6	73,2	69
211 100 00	100	4	51	50	4	25	6	80,2	74
211 114 00	114	4	58	57	4	25	6	108	94
211 120 00	120	4	61	60	4	25	6	121	100

* Basis of calculations see page 197.



Reworking within 24h-service possible. Custom made parts on request.

Spur Gears Made from Steel, with One-Sided Hub, Milled Teeth, Straight Tooth System

Material: 11SMnPb30. Gears marked with ** are from C45.
Tooth quality 8d DIN 58405.
Pressure angle 20°.

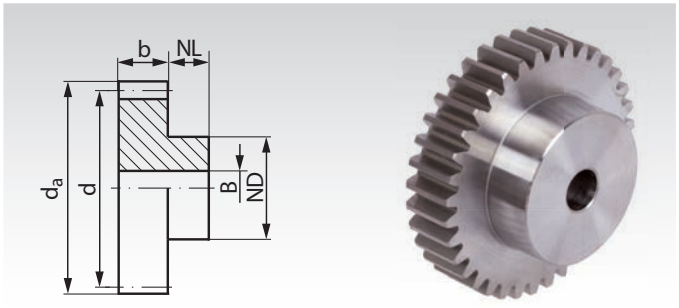

Ordering Details: e.g.: Product No. 212 010 00, Spur Gear, 11 SMnPb30, Module 0.7, 10 Teeth

Module 0.7 Tooth Width b = 5 mm

Product No.	Number of teeth	b mm	d_a mm	d mm	NL mm	ND mm	B^{H7} mm	perm.MD* Nm	Weight g
212 010 00	10	5	8,4	7	6	5	3	2,0	2
212 012 00	12	5	9,8	8,4	6	8	3	2,6	3
212 013 00	13	5	10,5	9,1	6	8	3	2,9	4
212 014 00	14	5	11,2	9,8	6	8	3	3,3	5
212 015 00	15	5	11,9	10,5	6	8	3	3,6	5
212 016 00	16	5	12,6	11,2	6	10	4	3,8	6
212 017 00	17	5	13,3	11,9	6	10	4	4,0	6
212 018 00	18	5	14	12,6	6	10	4	4,5	7
212 019 00	19	5	14,7	13,3	6	10	4	5,1	8
212 020 00	20	5	15,4	14	6	10	4	5,7	8
212 021 00	21	5	16,1	14,7	6	12	4	6,4	10
212 022 00	22	5	16,8	15,4	6	12	4	7,1	11
212 023 00	23	5	17,5	16,1	6	12	4	7,9	12
212 024 00	24	5	18,2	16,8	6	12	4	8,7	13
212 025 00	25	5	18,9	17,5	6	15	4	9,5	16
212 026 00	26	5	19,6	18,2	6	15	5	10,4	16
212 027 00	27	5	20,3	18,9	6	15	5	11,3	17
212 028 00	28	5	21	19,6	6	15	5	12,2	18
212 030 00	30	5	22,4	21	6	15	5	14,3	20
212 032 00	32	5	23,8	22,4	6	15	5	16,5	21
212 035 00	35	5	25,9	24,5	6	15	5	20,2	24
212 036 00	36	5	26,6	25,2	6	15	5	21,5	26
212 038 00	38	5	28	26,6	6	18	5	24,3	31
212 040 00	40	5	29,4	28	6	18	5	27,2	33
212 042 00	42	5	30,8	29,4	6	18	6	30,4	35
212 045 00	45	5	32,9	31,5	6	18	6	35,5	39
212 048 00	48	5	35	33,6	6	18	6	41,0	43
212 050 00	50	5	36,4	35	6	18	6	45,0	46
212 052 00	52	5	37,8	36,4	6	18	6	49,0	49
212 054 00	54	5	39,2	37,8	6	18	6	53,4	53
212 055 00	55	5	39,9	38,5	6	18	6	55,6	53
212 056 00	56	5	40,6	39,2	6	18	6	57,9	56
212 060 00	60	5	43,4	42	6	18	6	67,6	63
212 064 00	64	5	46,2	44,8	6	18	6	78,2	70
212 065 00	65	5	46,9	45,5	6	18	6	81,0	72
212 070 00	70	5	50,4	49	6	18	6	95,8	83
212 072 00	72	5	51,8	50,4	6	20	6	102	89
212 075 00	75	5	53,9	52,5	6	20	6	112	97
212 080 00	80	5	57,4	56	6	20	6	129	108
212 085 00	85	5	60,9	59,5	6	20	6	149	121
212 090 00	90	5	64,4	63	6	20	6	169	133
212 096 00	96	5	68,6	67,2	6	25	8	196	157
212 100 00	100	5	71,4	70	6	25	8	215	168
212 114 00**	114	5	81,2	79,8	6	25	8	291	217
212 120 00**	120	5	85,4	84	6	25	8	327	239

* Basis of calculations see page 197.



Reworking within 24h-service possible. Custom made parts on request.

Spur Gears Made from Steel, with One-Sided Hub, Slim Design, Milled Teeth, Straight Tooth System

Material: C45. Gears marked with ** are from 11SMnPb30.
Tooth quality 8d25 DIN 3967.
Pressure angle 20°.

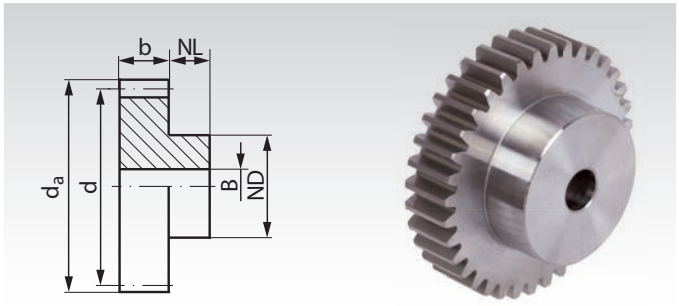

Ordering Details: e.g.: Product No. 213 010 00, Spur Gear, Module 1.0, 10 Teeth

Module 1.0 Tooth Width b = 6.5 mm

Product No.	Number of teeth	b mm	d_a mm	d mm	NL mm	ND mm	B^{H7} mm	perm. MT* Nm	Weight g
213 010 00**	10	6,5	12	10	6	8	4	0,06	5
213 012 00**	12	6,5	14	12	6	10	4	0,07	8
213 014 00**	14	6,5	16	14	6	10	5	0,09	9
213 015 00**	15	6,5	17	15	6	10	5	0,10	11
213 016 00**	16	6,5	18	16	6	12	5	0,11	13
213 017 00**	17	6,5	19	17	6	12	5	0,11	14
213 018 00**	18	6,5	20	18	6	15	5	0,13	19
213 020 00**	20	6,5	22	20	6	15	5	0,16	22
213 022 00**	22	6,5	24	22	6	15	5	0,20	25
213 024 00**	24	6,5	26	24	6	15	5	0,25	28
213 025 00**	25	6,5	27	25	6	15	5	0,27	30
213 028 00**	28	6,5	30	28	6	15	5	0,35	37
213 030 00**	30	6,5	32	30	6	15	5	0,41	41
213 032 00**	32	6,5	34	32	6	15	5	0,48	46
213 035 00**	35	6,5	37	35	6	15	5	0,58	54
213 036 00	36	6,5	38	36	6	15	5	1,67	57
213 040 00**	40	6,5	42	40	6	18	6	0,79	71
213 042 00**	42	6,5	44	42	6	18	6	0,88	78
213 045 00	45	6,5	47	45	6	18	6	2,77	88
213 048 00	48	6,5	50	48	8	18	6	3,20	103
213 050 00**	50	6,5	52	50	8	18	6	1,30	111
213 054 00	54	6,5	56	54	8	18	6	4,19	127
213 060 00**	60	6,5	62	60	8	18	6	1,97	155
213 064 00	64	6,5	66	64	8	18	6	6,16	174
213 065 00	65	6,5	67	65	8	18	8	6,37	175
213 070 00	70	6,5	72	70	8	25	8	7,56	219
213 072 00	72	6,5	74	72	10	25	8	8,06	236
213 075 00	75	6,5	77	75	10	40	8	8,86	313
213 080 00	80	6,5	82	80	10	40	10	9,94	342
213 090 00	90	6,5	92	90	12	40	10	11,9	426
213 100 00	100	6,5	102	100	12	40	10	14,0	501
213 120 00	120	6,5	122	120	12	40	10	19,3	674

Spur gears made from Steel Module 1 with and without hub Wide version page 222-223.

* Basis of calculations see page 197.

** 11SMnPb30.



Reworking within 24h-service possible. Custom made parts on request.

Spur Gears Made from Steel, Module 1.0, Tooth Width b = 10 mm, Milled Teeth, Straight Teethed

Material: C45. Gears marked with ** are from 11SMnPb30.
Tooth quality 8d25 DIN 3967. Pressure angle 20°.

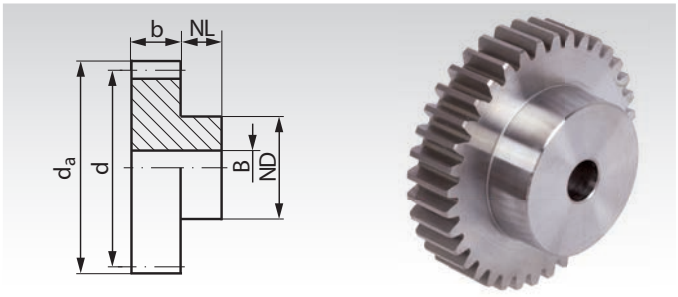

Ordering Details: e.g.: Product No. 214 010 00, Spur Gear, Module 1, 10 Teeth

Product No. with Hub	Number of teeth	b mm	d_a mm	d mm	NL mm	ND mm	B^{H7} mm	perm. MT* Nm	Weight g
214 010 00**	10	10	12	10	6	8	4	0,08	7
214 011 00**	11	10	13	11	6	8	4	0,10	8
214 012 00**	12	10	14	12	6	10	4	0,11	10
214 013 00**	13	10	15	13	6	10	5	0,13	11
214 014 00**	14	10	16	14	6	10	5	0,14	14
214 015 00**	15	10	17	15	6	12	5	0,15	16
214 016 00**	16	10	18	16	6	12	5	0,16	18
214 017 00**	17	10	19	17	6	12	6	0,17	19
214 018 00**	18	10	20	18	6	15	6	0,19	24
214 019 00**	19	10	21	19	6	15	6	0,22	26
214 020 00**	20	10	22	20	6	15	6	0,25	28
214 021 00**	21	10	23	21	6	15	6	0,28	31
214 022 00**	22	10	24	22	6	15	6	0,31	33
214 023 00**	23	10	25	23	6	15	6	0,35	36
214 024 00**	24	10	26	24	6	15	6	0,38	39
214 025 00**	25	10	27	25	6	20	8	0,42	46
214 026 00**	26	10	28	26	6	20	8	0,46	49
214 027 00**	27	10	29	27	6	20	8	0,50	52
214 028 00**	28	10	30	28	6	20	8	0,54	55
214 029 00	29	10	31	29	6	20	8	1,59	59
214 030 00**	30	10	32	30	8	25	8	0,63	77
214 031 00**	31	10	33	31	8	25	8	0,68	80
214 032 00**	32	10	34	32	8	25	8	0,73	85
214 033 00**	33	10	35	33	8	25	8	0,79	89
214 034 00**	34	10	36	34	8	25	8	0,84	92
214 035 00**	35	10	37	35	8	25	8	0,90	96
214 036 00**	36	10	38	36	8	25	8	0,96	102
214 037 00	37	10	39	37	8	25	8	2,75	106
214 038 00	38	10	40	38	8	25	8	2,92	110
214 039 00	39	10	41	39	8	25	8	3,08	115
214 040 00**	40	10	42	40	8	25	8	1,21	120
214 041 00	41	10	43	41	8	25	8	3,46	125
214 042 00	42	10	44	42	8	25	8	3,65	131
214 043 00	43	10	45	43	8	25	8	3,86	134
214 044 00**	44	10	46	44	8	25	8	1,50	140
214 045 00	45	10	47	45	10	30	10	4,27	165
214 046 00	46	10	48	46	10	30	10	4,48	171
214 047 00	47	10	49	47	10	30	10	4,70	178
214 048 00	48	10	50	48	10	30	10	4,94	182
214 049 00	49	10	51	49	10	30	10	5,18	188
214 050 00**	50	10	52	50	10	30	10	2,00	193
214 052 00	52	10	54	52	10	40	10	5,91	249
214 053 00	53	10	55	53	10	40	10	6,16	254
214 054 00	54	10	56	54	10	40	10	6,43	262
214 055 00	55	10	57	55	10	40	10	6,72	269
214 056 00	56	10	58	56	10	40	10	6,99	275
214 057 00	57	10	59	57	12	40	10	7,29	300
214 058 00	58	10	60	58	12	40	10	7,59	307
214 060 00**	60	10	62	60	12	40	10	3,03	320
214 062 00	62	10	64	62	12	40	10	8,83	337
214 064 00**	64	10	66	64	12	40	10	3,51	352
214 065 00	65	10	67	65	12	40	10	9,83	360
214 068 00	68	10	70	68	12	40	10	10,9	386
214 070 00**	70	10	72	70	12	40	10	4,31	401
214 072 00	72	10	74	72	12	50	10	12,4	484
214 074 00	74	10	76	74	12	50	10	13,2	502
214 075 00	75	10	77	75	12	50	10	13,6	510
214 076 00	76	10	78	76	12	50	10	13,8	521
214 078 00	78	10	80	78	12	50	10	14,0	541
214 080 00	80	10	82	80	12	50	10	14,5	560
214 082 00	82	10	84	82	12	50	10	15,0	583
214 083 00	83	10	85	83	12	50	10	15,3	594
214 085 00	85	10	87	85	12	50	10	15,9	611
214 087 00	87	10	89	87	12	50	10	16,5	633
214 090 00	90	10	92	90	12	50	12	17,5	659
214 095 00	95	10	97	95	12	60	12	19,0	795
214 100 00	100	10	102	100	12	60	12	20,7	856
214 110 00	110	10	112	110	12	60	12	26,5	983
214 114 00	114	10	116	114	12	60	12	27,3	1036
214 120 00	120	10	122	120	12	60	12	28,6	1125

Material: C45. Gears marked with ** are from 11SMnPb30.
Tooth quality 8d25 DIN 3967. Pressure angle 20°.

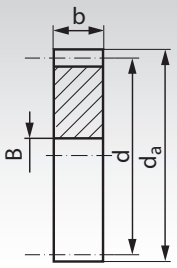



Ordering Details: e.g.: Product No. 224 018 00, Spur Gear, Module 1, 18 Teeth

Product No. without Hub	Number of teeth	b mm	d_a mm	d mm	B^{H7} mm	perm. MT* Nm	Weight g
224 018 00**	18	10	20	18	6	0,19	17
224 020 00**	20	10	22	20	6	0,25	21
224 021 00	21	10	23	21	6	0,76	26
224 022 00**	22	10	24	22	6	0,31	26
224 023 00**	23	10	25	23	6	0,35	29
224 024 00**	24	10	26	24	6	0,38	32
224 025 00**	25	10	27	25	6	0,42	35
224 026 00**	26	10	28	26	6	0,46	38
224 027 00	27	10	29	27	6	1,35	41
224 028 00**	28	10	30	28	6	0,54	44
224 030 00**	30	10	32	30	8	0,63	50
224 032 00**	32	10	34	32	8	0,73	54
224 033 00	33	10	35	33	8	2,13	61
224 034 00**	34	10	36	34	8	0,84	65
224 035 00**	35	10	37	35	8	0,90	69
224 036 00**	36	10	38	36	8	0,96	74
224 037 00	37	10	39	37	8	2,75	79
224 038 00**	38	10	40	38	8	1,08	82
224 039 00	39	10	41	39	8	3,08	87
224 040 00**	40	10	42	40	8	1,21	92
224 041 00	41	10	43	41	8	3,46	97
224 042 00**	42	10	44	42	8	1,35	101
224 043 00	43	10	45	43	8	3,86	108
224 044 00**	44	10	46	44	8	1,50	113
224 045 00	45	10	47	45	10	4,27	116
224 046 00	46	10	48	46	10	4,48	121
224 047 00	47	10	49	47	10	4,70	128
224 048 00**	48	10	50	48	10	1,83	133
224 049 00	49	10	51	49	10	5,18	139
224 050 00**	50	10	52	50	10	2,00	145
224 051 00	51	10	53	51	10	5,62	152
224 052 00	52	10	54	52	10	5,91	157
224 053 00	53	10	55	53	10	6,16	163
224 054 00	54	10	56	54	10	6,43	170
224 055 00	55	10	57	55	10	6,72	176
224 056 00	56	10	58	56	10	6,99	183
224 059 00	59	10	61	59	10	7,88	204
224 060 00**	60	10	62	60	10	3,03	212
224 061 00	61	10	63	61	10	8,51	218
224 063 00	63	10	65	63	10	9,15	234
224 064 00	64	10	66	64	10	9,48	242
224 065 00	65	10	67	65	10	9,83	249
224 066 00	66	10	68	66	10	10,2	260
224 067 00	67	10	69	67	10	10,4	265
224 068 00	68	10	70	68	10	10,9	274
224 069 00	69	10	71	69	10	11,3	283
224 070 00	70	10	72	70	10	11,6	290
224 071 00	71	10	73	71	10	12,0	301
224 072 00**	72	10	74	72	10	4,59	309
224 073 00	73	10	75	73	10	12,8	317
224 075 00	75	10	77	75	10	13,6	334
224 076 00	76	10	78	76	10	13,8	343
224 077 00	77	10	79	77	10	13,9	351
224 078 00	78	10	80	78	10	14,0	366
224 079 00	79	10	81	79	10	14,3	373
224 080 00	80	10	82	80	10	14,5	384
224 082 00	82	10	84	82	10	15,0	401
224 084 00	84	10	86	84	10	15,6	423
224 085 00	85	10	87	85	12	15,9	427
224 090 00	90	10	92	90	12	17,5	486
224 092 00	92	10	94	92	12	18,1	508
224 096 00	96	10	98	96	12	19,4	550
224 100 00	100	10	102	100	12	20,7	601
224 105 00	105	10	107	105	12	25,5	662
224 110 00	110	10	112	110	12	26,5	728
224 114 00	114	10	116	114	12	27,3	783
224 120 00	120	10	122	120	12	28,6	870
224 124 00	124	10	126	124	12	29,1	934

* Basis of calculations see page 197.

** 11SMnPb30.

Spur Gears Made from Steel, Module 1.0, Tooth Width b = 15 mm, Milled Teeth, Straight Tooth System

Material: C45. Gear-tooth quality 8d25 DIN 3967.
Pressure angle 20°.

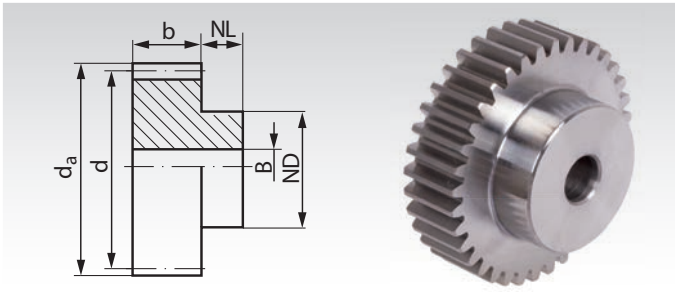

Ordering Details: e.g.: Product No. 214 110 11, Spur Gear, C45, Module 1.0, 11 Teeth

Product No. with Hub	Number of teeth	b mm	d_a mm	d mm	NL mm	ND mm	B^{H7} mm	perm. MT* Nm	Weight g
214 110 11	11	15	13	11	10	8	5	0,30	12
214 110 12	12	15	14	12	10	9	6	0,35	13
214 110 13	13	15	15	13	10	10	6	0,40	16
214 110 14	14	15	16	14	10	11	6	0,45	20
214 110 15	15	15	17	15	10	12	6	0,49	24
214 110 16	16	15	18	16	10	13	6	0,53	28
214 110 17	17	15	19	17	10	14	6	0,55	33
214 110 18	18	15	20	18	10	15	8	0,62	33
214 110 19	19	15	21	19	10	15	8	0,72	37
214 110 20	20	15	22	20	10	16	8	0,81	42
214 110 21	21	15	23	21	10	16	8	0,91	46
214 110 22	22	15	24	22	10	16	8	1,01	50
214 110 23	23	15	25	23	10	18	8	1,12	58
214 110 24	24	15	26	24	10	20	10	1,25	61
214 110 25	25	15	27	25	10	20	10	1,36	66
214 110 26	26	15	28	26	10	20	10	1,50	70
214 110 27	27	15	29	27	10	20	10	1,64	75
214 110 28	28	15	30	28	10	20	10	1,77	80
214 110 29	29	15	31	29	10	20	10	1,95	85
214 110 30	30	15	32	30	10	20	10	2,09	90
214 110 31	31	15	33	31	10	25	10	2,24	110
214 110 32	32	15	34	32	10	25	10	2,43	120
214 110 33	33	15	35	33	10	25	10	2,62	120
214 110 34	34	15	36	34	10	25	10	2,79	130
214 110 35	35	15	37	35	10	25	10	2,99	135
214 110 36	36	15	38	36	10	25	10	3,18	140
214 110 37	37	15	39	37	10	25	10	3,29	145
214 110 38	38	15	40	38	10	25	10	3,64	155
214 110 39	39	15	41	39	10	25	10	3,85	160
214 110 40	40	15	42	40	10	25	10	4,09	170
214 110 41	41	15	43	41	10	30	10	4,36	190
214 110 42	42	15	44	42	10	30	10	4,59	200
214 110 43	43	15	45	43	10	30	10	4,86	210
214 110 44	44	15	46	44	10	30	10	5,11	215
214 110 45	45	15	47	45	10	30	10	5,38	225
214 110 46	46	15	48	46	10	30	10	5,66	230
214 110 47	47	15	49	47	10	30	10	6,02	240
214 110 48	48	15	50	48	10	30	10	6,42	250
214 110 49	49	15	51	49	10	30	10	6,82	260
214 110 50	50	15	52	50	10	30	12	7,25	260
214 110 51	51	15	53	51	10	40	12	7,69	310
214 110 52	52	15	54	52	10	40	12	8,18	320
214 110 53	53	15	55	53	10	40	12	8,43	330
214 110 54	54	15	56	54	10	40	12	8,93	340
214 110 55	55	15	57	55	10	40	12	9,34	350
214 110 56	56	15	58	56	10	40	12	9,72	360
214 110 57	57	15	59	57	10	40	12	10,1	370
214 110 58	58	15	60	58	10	40	12	10,5	380
214 110 59	59	15	61	59	10	40	12	11,0	390
214 110 60	60	15	62	60	10	40	12	11,5	400
214 110 61	61	15	63	61	10	50	12	12,0	470
214 110 62	62	15	64	62	10	50	12	12,7	480
214 110 63	63	15	65	63	10	50	12	13,3	490
214 110 64	64	15	66	64	10	50	12	14,0	500
214 110 65	65	15	67	65	10	50	12	14,6	515
214 110 66	66	15	68	66	10	50	12	15,0	525
214 110 67	67	15	69	67	10	50	12	15,5	540
214 110 68	68	15	70	68	10	50	12	15,9	550
214 110 69	69	15	71	69	10	50	12	16,3	560
214 110 70	70	15	72	70	10	50	12	16,7	575

Material: C45. Gear-tooth quality 8d25 DIN 3967.
Pressure angle 20°.

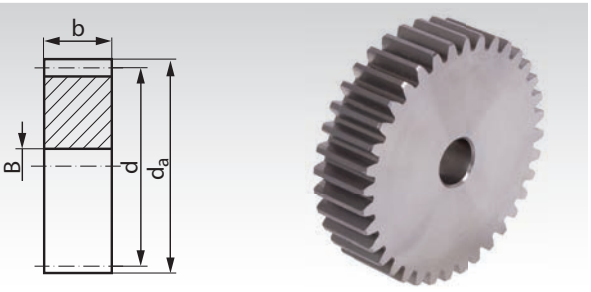

Ordering Details: e.g.: Product No. 224 110 18, Spur Gear, C45, Module 1.0, 18 Teeth

Product No. without Hub	Number of teeth	b mm	d_a mm	d mm	B^{H7} mm	perm. MT* Nm	Weight g
224 110 18	18	15	20	18	8	0,62	24
224 110 20	20	15	22	20	8	0,81	30
224 110 24	24	15	26	24	10	1,25	43
224 110 25	25	15	27	25	10	1,36	48
224 110 30	30	15	32	30	10	2,09	72
224 110 35	35	15	37	35	10	2,99	102
224 110 36	36	15	38	36	10	3,18	108
224 110 40	40	15	42	40	10	4,09	136
224 110 45	45	15	47	45	10	5,38	174
224 110 48	48	15	50	48	10	6,42	200
224 110 50	50	15	52	50	12	7,25	214
224 110 52	52	15	54	52	12	8,18	232
224 110 60	60	15	62	60	12	11,46	313
224 110 72	72	15	74	72	12	17,29	460
224 110 75	75	15	77	75	12	18,38	510
224 110 76	76	15	78	76	12	18,72	520
224 110 80	80	15	82	80	12	20,3	580
224 110 85	85	15	87	85	12	22,3	650
224 110 90	90	15	92	90	12	24,5	730
224 110 95	95	15	97	95	12	26,6	820
224 111 00	100	15	102	100	12	28,9	910
224 111 10	110	15	112	110	12	37,1	1084
224 111 14	114	15	116	114	12	38,2	1165
224 111 20	120	15	122	120	12	40,0	1320
224 111 27	127	15	129	127	12	42,0	1470

* Basis of calculations see page 197.

Gears with hardened teeth Page 240





Reworking within 24h-service possible. Custom made parts on request.

Spur Gears Made from Steel, Module 1.25, Tooth Width b = 10 mm, Milled Teeth, Straight Tooth System

Material: C45. Gears marked with ** are from 11SMnPb30.
Tooth quality 8d25 DIN 3967. Pressure angle 20°.

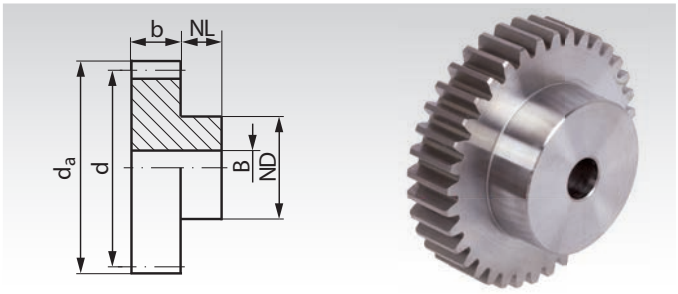

Ordering Details: e.g.: Product No. 216 012 00, Spur Gear, Module 1.25, 12 Teeth

Product No. with Hub	Number of teeth	b mm	d_a mm	d mm	NL mm	ND mm	B^{H7} mm	perm. MT* Nm	Weight g
216 012 00**	12	10	17,5	15	10	12	5	0,19	19
216 013 00	13	10	18,75	16,25	10	12	5	0,57	21
216 014 00	14	10	20	17,5	10	12	5	0,62	24
216 015 00**	15	10	21,25	18,75	10	15	6	0,26	30
216 016 00**	16	10	22,5	20	10	15	6	0,27	33
216 017 00	17	10	23,75	21,25	10	15	6	0,76	36
216 018 00**	18	10	25	22,5	10	15	6	0,32	40
216 019 00	19	10	26,25	23,75	10	15	6	1,00	43
216 020 00**	20	10	27,5	25	10	15	6	0,41	46
216 021 00**	21	10	28,75	26,25	10	15	6	0,46	50
216 022 00**	22	10	30	27,5	10	20	8	0,51	61
216 023 00	23	10	31,25	28,75	10	20	8	1,54	66
216 024 00**	24	10	32,5	30	10	20	8	0,63	70
216 025 00	25	10	33,75	31,25	10	20	8	1,86	75
216 026 00	26	10	35	32,5	10	20	8	2,03	80
216 027 00	27	10	36,25	33,75	10	20	8	2,21	88
216 028 00	28	10	37,5	35	10	20	8	2,40	90
216 030 00**	30	10	40	37,5	10	25	10	1,04	111
216 032 00	32	10	42,5	40	10	25	10	3,27	121
216 035 00	35	10	46,25	43,75	10	25	10	4,00	140
216 036 00	36	10	47,5	45	10	25	10	4,27	147
216 037 00	37	10	48,75	46,25	10	25	10	4,54	154
216 038 00**	38	10	50	47,5	10	30	10	1,78	179
216 040 00**	40	10	52,5	50	12	30	10	2,00	204
216 042 00	42	10	55	52,5	12	30	10	6,05	218
216 045 00	45	10	58,75	56,25	12	30	10	7,05	244
216 048 00	48	10	62,5	60	12	30	10	8,18	268
216 050 00	50	10	65	62,5	12	30	10	8,30	291
216 052 00	52	10	67,5	65	12	30	10	9,80	307
216 054 00	54	10	70	67,5	12	40	10	10,7	380
216 055 00	55	10	71,25	68,75	12	40	10	11,2	392
216 056 00	56	10	72,5	70	12	40	10	11,6	402
216 057 00	57	10	73,75	71,25	12	40	10	12,1	407
216 060 00	60	10	77,5	75	12	40	10	14,0	444
216 064 00	64	10	82,5	80	12	40	10	17,0	491
216 065 00	65	10	83,75	81,25	12	40	10	17,6	507
216 070 00	70	10	90	87,5	12	40	12	20,9	566
216 072 00	72	10	92,5	90	12	40	12	22,2	594
216 075 00	75	10	96,25	93,75	12	40	12	23,6	634
216 076 00	76	10	97,5	95	12	50	12	24,1	712
216 080 00	80	10	102,5	100	12	50	12	26,0	772
216 085 00	85	10	108,75	106,25	12	50	12	28,5	868
216 090 00	90	10	115	112,5	12	50	12	31,1	938
216 100 00	100	10	127,5	125	12	50	12	39,6	1119
216 120 00	120	10	152,5	150	12	50	12	43,9	1537

Material: C45. Gears marked with ** are from 11SMnPb30.
Tooth quality 8d25 DIN 3967. Pressure angle 20°.

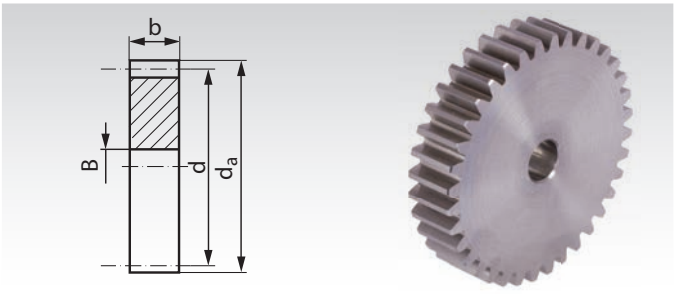

Ordering Details: e.g.: Product No. 226 016 00, Spur Gear, Module 1.25, 16 Teeth

Product No. without Hub	Number of teeth	b mm	d_a mm	d mm	B^{H7} mm	perm. MT* Nm	Weight g
226 016 00	16	10	22,5	20	6	0,73	21
226 017 00	17	10	23,75	21,25	6	0,76	25
226 019 00	19	10	26,25	23,75	6	1,00	32
226 020 00**	20	10	27,5	25	6	0,41	35
226 021 00	21	10	28,75	26,25	6	1,24	40
226 022 00	22	10	30	27,5	6	1,38	43
226 023 00	23	10	31,25	28,75	6	1,54	48
226 024 00	24	10	32,5	30	8	1,70	50
226 025 00	25	10	33,75	31,25	8	1,86	55
226 026 00	26	10	35	32,5	8	2,03	59
226 027 00	27	10	36,25	33,75	8	2,21	64
226 028 00	28	10	37,5	35	8	2,40	70
226 030 00	30	10	40	37,5	10	2,59	81
226 032 00	32	10	42,5	40	10	2,81	90
226 034 00	34	10	45	42,5	10	3,73	103
226 035 00	35	10	46,25	43,75	10	4,00	109
226 036 00	36	10	47,5	45	10	4,27	117
226 038 00	38	10	50	47,5	10	4,81	129
226 040 00	40	10	52,5	50	10	5,40	144
226 042 00	42	10	55	52,5	10	6,05	159
226 045 00	45	10	58,75	56,25	10	7,05	184
226 048 00	48	10	62,5	60	10	8,18	209
226 050 00	50	10	65	62,5	10	8,30	229
226 052 00	52	10	67,5	65	10	9,80	250
226 054 00	54	10	70	67,5	10	10,7	267
226 055 00	55	10	71,25	68,75	10	11,2	278
226 056 00**	56	10	72,5	70	10	4,3	291
226 060 00	60	10	77,5	75	10	14,0	334
226 064 00	64	10	82,5	80	10	17,0	384
226 070 00	70	10	90	87,5	12	20,9	460
226 072 00	72	10	92,5	90	12	22,2	488
226 075 00	75	10	96,25	93,75	12	23,6	525
226 080 00	80	10	102,5	100	12	26,0	601
226 090 00	90	10	115	112,5	12	31,1	758
226 095 00	95	10	121,25	118,75	12	38,1	842
226 100 00	100	10	127,5	125	15	39,6	940
226 114 00	114	10	145	142,5	15	43,0	1220
226 120 00	120	10	152,5	150	20	43,9	1335

* Basis of calculations see page 197.

** 11SMnPb30.



Reworking within 24h-service possible. Custom made parts on request.

Spur Gears Made from Steel, Module 1.5, Tooth Width b = 10 mm, with Hub, Milled Teeth, Straight Tooth System

Material: C45. Gears marked with ** are from 11SMnPb30.
Tooth quality 8d25 DIN 3967. Pressure angle 20°.

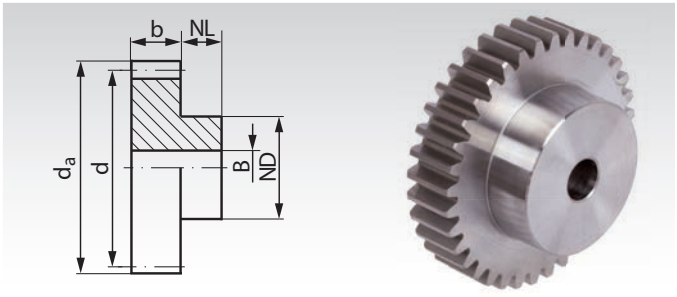

Ordering Details: e.g.: Product No. 217 012 00, Spur Gear, Module 1.5, 12 Teeth

Product No.	Number of teeth	b mm	d_a mm	d mm	NL mm	ND mm	B^{H7} mm	perm. MT* Nm	Weight g
217 012 00**	12	10	21	18	10	15	8	0,28	24
217 015 00**	15	10	25,5	22,5	10	18	10	0,38	37
217 018 00**	18	10	30	27	10	22	10	0,48	61
217 020 00**	20	10	33	30	10	25	10	0,62	79
217 024 00**	24	10	39	36	10	25	10	0,94	101
217 025 00**	25	10	40,5	37,5	10	25	10	1,03	110
217 028 00	28	10	45	42	10	25	10	3,62	131
217 030 00	30	10	48	45	10	25	10	4,23	148
217 032 00	32	10	51	48	10	25	10	4,90	164
217 035 00	35	10	55,5	52,5	10	25	10	6,01	204
217 040 00	40	10	63	60	10	25	10	8,15	242
217 042 00	42	10	66	63	10	25	10	9,13	267
217 045 00	45	10	70,5	67,5	10	25	10	10,7	301
217 048 00	48	10	75	72	10	25	10	12,4	339
217 050 00	50	10	78	75	10	30	10	13,6	382
217 055 00	55	10	85,5	82,5	10	30	10	18,2	460
217 060 00	60	10	93	90	10	30	10	22,3	535
217 065 00	65	10	100,5	97,5	15	45	12	28,3	742
217 070 00	70	10	108	105	15	45	12	34,3	839
217 080 00	80	10	123	120	15	45	12	41,5	1041

Spur gears made from Steel

Module 1.5 with and without hub Wide Version page 226.

* Basis of calculations see page 197.

** 11SMnPb30.



Reworking within 24h-service possible. Custom made parts on request.

Spur Gears Made from Steel, Module 1.5, Tooth Width b = 15 mm, Milled Teeth, Straight Tooth System

Material: C45. Gears marked with ** are from 11SMnPb30.
Tooth quality 8d25 DIN 3967. Pressure angle 20°.

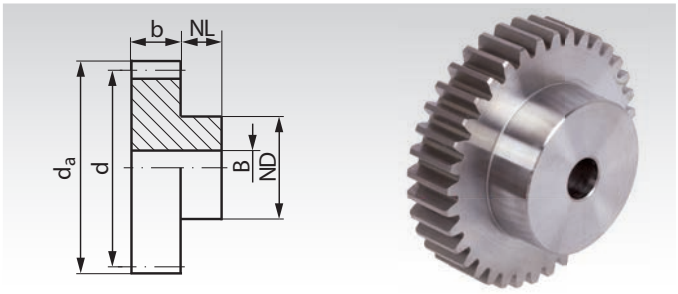

Ordering Details: e.g.: Product No. 218 011 00, Spur Gear, Module 1.5, 11 Teeth

Product No. with Hub	Number of teeth	b mm	d_a mm	d mm	NL mm	ND mm	B^{H7} mm	perm. MT* Nm	Weight g
218 011 00	11	15	19,5	16,5	10	12	6	0,95	28
218 012 00**	12	15	21	18,0	10	15	8	0,41	32
218 013 00**	13	15	22,5	19,5	10	15	8	0,47	37
218 014 00**	14	15	24	21,0	10	15	8	0,52	42
218 015 00**	15	15	25,5	22,5	10	18	10	0,57	49
218 016 00**	16	15	27	24,0	10	20	10	0,62	60
218 017 00**	17	15	28,5	25,5	10	20	10	0,67	66
218 018 00**	18	15	30	27,0	10	22	10	0,72	79
218 019 00	19	15	31,5	28,5	10	25	10	2,21	95
218 020 00**	20	15	33	30,0	10	25	10	0,92	103
218 021 00	21	15	34,5	31,5	15	25	10	2,78	128
218 022 00**	22	15	36	33,0	15	25	10	1,15	136
218 023 00	23	15	37,5	34,5	15	25	10	3,46	145
218 024 00**	24	15	39	36,0	15	25	10	1,41	154
218 025 00**	25	15	40,5	37,5	15	25	10	1,55	166
218 026 00**	26	15	42	39,0	15	25	10	1,69	175
218 027 00	27	15	43,5	40,5	15	25	10	5,00	185
218 028 00	28	15	45	42,0	15	25	10	5,43	198
218 030 00**	30	15	48	45,0	15	30	10	2,35	246
218 031 00	31	15	49,5	46,5	15	30	10	6,83	263
218 032 00**	32	15	51	48,0	15	30	10	2,72	273
218 034 00	34	15	54	51,0	15	30	10	8,45	298
218 035 00	35	15	55,5	52,5	15	30	10	9,02	317
218 036 00	36	15	57	54,0	15	40	10	9,61	392
218 038 00	38	15	60	57,0	15	40	10	10,88	422
218 040 00**	40	15	63	60,0	15	40	10	4,53	454
218 042 00	42	15	66	63,0	15	40	10	13,7	488
218 044 00	44	15	69	66,0	15	40	10	15,2	523
218 045 00	45	15	70,5	67,5	15	40	10	16,0	541
218 046 00	46	15	72	69,0	15	40	10	16,9	560
218 048 00	48	15	75	72,0	15	40	10	18,6	599
218 050 00	50	15	78	75,0	15	50	10	20,4	721
218 052 00	52	15	81	78,0	15	50	10	24,0	765
218 054 00	54	15	84	81,0	15	50	10	26,2	810
218 055 00	55	15	85,5	82,5	15	50	10	27,4	831
218 056 00	56	15	87	84,0	15	50	10	28,5	855
218 057 00	57	15	88,5	85,5	15	50	10	29,7	880
218 058 00	58	15	90	87,0	15	50	10	30,9	905
218 060 00	60	15	93	90,0	15	60	12	33,6	1041
218 062 00	62	15	96	93,0	15	60	12	37,1	1096
218 063 00	63	15	97,5	94,5	15	60	12	39,0	1122
218 064 00	64	15	99	96,0	15	60	12	40,9	1148
218 065 00	65	15	100,5	97,5	15	60	12	42,8	1172
218 068 00	68	15	105	102,0	15	60	12	46,7	1254
218 070 00	70	15	108	105,0	20	60	12	48,7	1423
218 072 00	72	15	111	108	20	70	12	50,7	1683
218 074 00	74	15	114	111	20	70	12	52,3	1716
218 075 00	75	15	115,5	112,5	20	70	12	53,9	1726
218 076 00	76	15	117	114	20	70	15	54,9	1746
218 078 00	78	15	120	117	20	70	15	57,1	1782
218 080 00	80	15	123	120	20	70	15	59,2	1878
218 082 00	82	15	126	123	20	70	15	61,0	1941
218 085 00	85	15	130,5	127,5	20	70	15	73,3	2038
218 090 00	90	15	138	135	20	70	15	77,1	2221
218 095 00	95	15	145,5	142,5	20	70	15	80,8	2398
218 100 00	100	15	153	150	20	70	15	83,8	2620
218 114 00	114	15	174	171	20	70	20	87,5	3166
218 120 00	120	15	183	180	20	70	20	91,6	3468

* Basis of calculations see page 197.

** 11SMnPb30.

Material: C45. Gears marked with ** are from 11SMnPb30.
Tooth quality 8d25 DIN 3967. Pressure angle 20°.

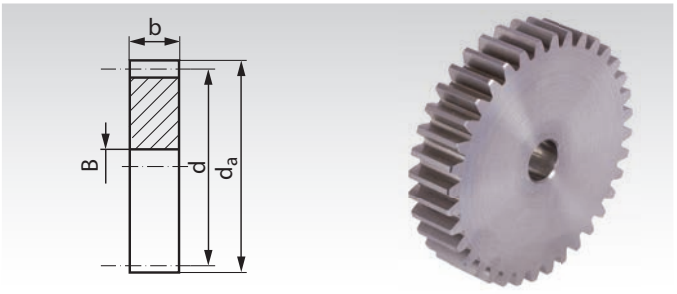

Ordering Details: e.g.: Product No. 228 018 00, Spur Gear, Module 1.5, 18 Teeth

Product No. without Hub	Number of teeth	b mm	d_a mm	d mm	B^{H7} mm	perm. MT* Nm	Weight g
228 018 00	18	15	30	27	8	1,94	60
228 020 00**	20	15	33	30	8	0,92	75
228 021 00**	21	15	34,5	31,5	8	1,03	83
228 023 00**	23	15	37,5	34,5	8	1,28	101
228 024 00	24	15	39	36	8	3,81	110
228 025 00	25	15	40,5	37,5	8	4,19	120
228 026 00	26	15	42	39	8	1,69	131
228 027 00	27	15	43,5	40,5	8	5,00	141
228 028 00	28	15	45	42	10	5,43	149
228 029 00	29	15	46,5	43,5	10	5,89	161
228 030 00**	30	15	48	45	10	2,35	174
228 032 00**	32	15	51	48	10	2,72	199
228 033 00	33	15	52,5	49,5	10	7,88	212
228 035 00	35	15	55,5	52,5	10	9,02	240
228 036 00	36	15	57	54	10	9,61	255
228 037 00	37	15	58,5	55,5	10	10,2	267
228 038 00	38	15	60	57	10	10,9	284
228 039 00	39	15	61,5	58,5	10	11,6	300
228 040 00**	40	15	63	60	10	4,53	316
228 041 00	41	15	64,5	61,5	10	13,0	336
228 043 00	43	15	67,5	64,5	10	14,5	367
228 045 00	45	15	70,5	67,5	10	16,0	403
228 047 00	47	15	73,5	70,5	10	17,7	441
228 048 00	48	15	75	72	10	18,6	460
228 050 00	50	15	78	75	10	20,4	500
228 051 00	51	15	79,5	76,5	10	21,3	525
228 052 00	52	15	81	78	10	24,0	545
228 053 00	53	15	82,5	79,5	10	25,1	574
228 054 00	54	15	84	81	12	26,2	585
228 055 00	55	15	85,5	82,5	12	27,4	607
228 056 00	56	15	87	84	12	28,5	629
228 060 00	60	15	93	90	12	33,6	726
228 064 00	64	15	99	96	12	40,9	832
228 065 00	65	15	100,5	97,5	12	42,8	850
228 067 00	67	15	103,5	100,5	12	45,7	909
228 070 00	70	15	108	105	12	48,7	990
228 071 00	71	15	109,5	106,5	12	49,7	1022
228 072 00	72	15	111	108	12	50,7	1051
228 075 00	75	15	115,5	112,5	12	53,9	1146
228 076 00	76	15	117	114	15	54,9	1166
228 080 00	80	15	123	120	15	59,2	1298
228 085 00	85	15	130,5	127,5	15	73,3	1455
228 088 00	88	15	135	132	15	75,6	1576
228 090 00	90	15	138	135	15	77,1	1659
228 095 00	95	15	145,5	142,5	15	80,8	1825
228 096 00	96	15	147	144	15	81,5	1878
228 100 00	100	15	153	150	15	83,8	2048
228 110 00	110	15	168	165	20	86,2	2465
228 114 00	114	15	174	171	20	87,5	2647
228 120 00	120	15	183	180	20	91,6	2939



Reworking within 24h-service possible. Custom made parts on request.

Spur Gears Made from Steel, Module 1.5, Tooth Width b = 17 mm, Milled Teeth, Straight Tooth System

Material: C45. Tooth quality 8d25 DIN 3967.
Pressure angle 20°.

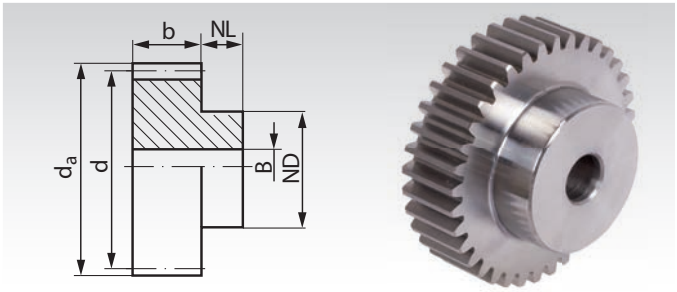

Ordering Details: e.g.: Product No. 218 110 11, Spur Gear, C45, Module 1.5, 11 Teeth

Product No. with Hub	Number of teeth	b mm	d_a mm	d mm	NL mm	ND mm	B^{H7} mm	perm. MT* Nm	Weight g
218 110 11	11	17	19,5	16,5	13	12	6	0,99	33
218 110 12	12	17	21	18	13	14	8	1,14	40
218 110 13	13	17	22,5	19,5	13	15	8	1,30	50
218 110 14	14	17	24	21	13	17	8	1,46	60
218 110 15	15	17	25,5	22,5	13	18	8	1,58	70
218 110 16	16	17	27	24	13	19	8	1,71	80
218 110 17	17	17	28,5	25,5	13	20	8	1,79	90
218 110 18	18	17	30	27	13	20	8	1,99	100
218 110 19	19	17	31,5	28,5	13	20	8	2,31	100
218 110 20	20	17	33	30	13	25	8	2,60	130
218 110 21	21	17	34,5	31,5	13	25	10	2,92	130
218 110 22	22	17	36	33	13	25	10	3,25	140
218 110 23	23	17	37,5	34,5	13	25	10	3,61	160
218 110 24	24	17	39	36	13	25	10	4,02	170
218 110 25	25	17	40,5	37,5	13	25	10	4,38	180
218 110 26	26	17	42	39	13	30	12	4,83	200
218 110 27	27	17	43,5	40,5	13	30	12	5,28	220
218 110 28	28	17	45	42	13	30	12	5,72	230
218 110 29	29	17	46,5	43,5	13	30	12	6,29	240
218 110 30	30	17	48	45	13	30	12	6,74	260
218 110 31	31	17	49,5	46,5	13	35	12	7,23	300
218 110 32	32	17	51	48	13	35	12	7,84	310
218 110 33	33	17	52,5	49,5	13	35	12	8,44	330
218 110 34	34	17	54	51	13	35	12	9,01	340
218 110 35	35	17	55,5	52,5	13	35	12	9,66	360
218 110 36	36	17	57	54	13	35	12	10,3	370
218 110 37	37	17	58,5	55,5	13	40	12	10,6	420
218 110 38	38	17	60	57	13	40	12	11,7	440
218 110 39	39	17	61,5	58,5	13	40	12	12,4	460
218 110 40	40	17	63	60	13	40	12	13,2	480
218 110 41	41	17	64,5	61.5	13	40	12	14,1	500
218 110 42	42	17	66	63	13	50	12	14,8	590
218 110 43	43	17	67,5	64.5	13	50	12	15,7	610
218 110 44	44	17	69	66	13	50	12	16,5	630
218 110 45	45	17	70,5	67,5	13	50	12	17,3	650
218 110 46	46	17	72	69	13	50	14	18,3	660
218 110 47	47	17	73,5	70,5	13	50	14	19,4	700
218 110 48	48	17	75	72	13	50	14	20,7	700
218 110 49	49	17	76,5	73,5	13	50	14	22,0	730
218 110 50	50	17	78	75	13	50	14	23,4	760
218 110 51	51	17	79,5	76.5	13	60	14	24,8	860
218 110 52	52	17	81	78	13	60	14	26,4	890
218 110 53	53	17	82,5	79.5	13	60	14	27,2	910
218 110 54	54	17	84	81	13	60	14	28,8	940
218 110 55	55	17	85,5	82.5	13	60	14	30,1	960
218 110 56	56	17	87	84	13	60	16	31,4	980
218 110 59	59	17	91,5	88,5	13	60	16	35,5	1060
218 110 60	60	17	93	90	13	60	16	37,0	1090
218 110 64	64	17	99	96	13	70	16	45,0	1310
218 110 65	65	17	100,5	97,5	13	70	16	47,1	1340
218 110 66	66	17	102	99	13	70	16	48,5	1370
218 110 68	68	17	105	102	13	70	16	51,4	1430
218 110 69	69	17	106,5	103,5	13	70	16	52,6	1460
218 110 70	70	17	108	105	13	70	16	53,7	1500
218 110 72	72	17	111	108	13	80	16	55,8	1660
218 110 75	75	17	115,5	112,5	13	80	16	59,3	1760
218 110 80	80	17	123	120	13	80	16	65,1	1940
218 110 90	90	17	138	135	13	80	16	84,8	2330
218 111 00	100	17	153	150	13	80	16	92,2	2770
218 111 20	120	17	183	180	13	80	16	100,8	3790

Material: C45. Tooth quality 8d25 DIN 3967.
Pressure angle 20°.

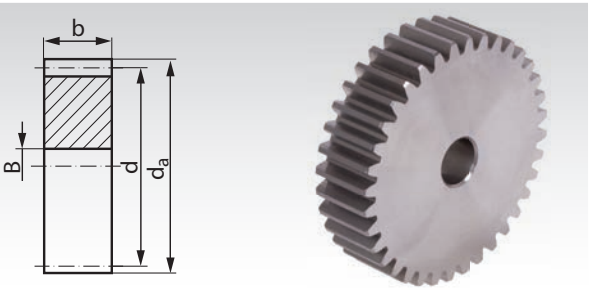

Ordering Details: e.g.: Product No. 228 110 18, Spur Gear, C45, Module 1.5, 18 Teeth

Product No. without Hub	Number of teeth	b mm	d_a mm	d mm	B^{H7} mm	perm. MT* Nm	Weight g
228 110 18	18	17	30	27	8	1,99	68
228 110 20	20	17	33	30	8	2,60	86
228 110 24	24	17	39	36	10	4,02	123
228 110 25	25	17	40,5	37,5	10	4,38	135
228 110 30	30	17	48	45	12	6,74	195
228 110 35	35	17	55,5	52,5	12	9,66	270
228 110 36	36	17	57	54	12	10,3	285
228 110 40	40	17	63	60	12	13,2	355
228 110 45	45	17	70,5	67,5	12	17,3	455
228 110 48	48	17	75	72	14	20,7	510
228 110 50	50	17	78	75	14	23,4	560
228 110 60	60	17	93	90	16	37,0	810
228 110 72	72	17	111	108	16	55,8	1190
228 110 75	75	17	115,5	112,5	16	59,3	1300
228 110 76	76	17	117	114	16	60,4	1330
228 110 80	80	17	123	120	16	65,1	1480
228 110 85	85	17	130,5	127,5	16	80,6	1670
228 110 90	90	17	138	135	16	84,8	1880
228 110 95	95	17	145,5	142,5	16	88,9	2090
228 111 00	100	17	153	150	16	92,2	2320
228 111 10	110	17	168	165	16	94,2	2820
228 111 14	114	17	174	171	16	96,2	3030
228 111 20	120	17	183	180	16	100,8	3360
228 111 27	127	17	193,5	190,5	16	107,0	3770

* Basis of calculations see page 197.

Gears with hardened teeth Page 240





Reworking within 24h-service possible. Custom made parts on request.

Spur Gears Made from Steel, Module 2.0, Tooth Width b = 16 mm, Milled Teeth, Straight Tooth System

Material: C45. Gears marked with ** are from 11SMnPb30.
Tooth quality 8d25 DIN 3967. Pressure angle 20°.

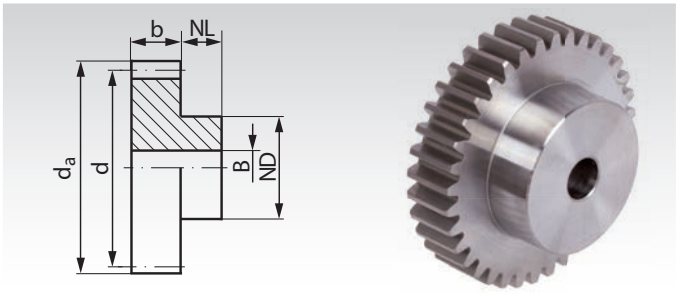

Ordering Details: e.g.: Product No. 231 010 00, Spur Gear, Module 2, 10 Teeth

Product No. with Hub	Number of teeth	b mm	d_a mm	d mm	NL mm	ND mm	B^{H7} mm	perm. MT* Nm	Weight g
231 010 00**	10	16	24	20	15	15	8	0,6	45
231 012 00**	12	16	28	24	15	20	10	0,8	70
231 013 00**	13	16	30	26	15	20	10	0,9	81
231 014 00**	14	16	32	28	15	25	10	1,1	110
231 015 00**	15	16	34	30	15	25	12	1,2	114
231 016 00**	16	16	36	32	15	25	12	1,3	126
231 017 00	17	16	38	34	15	25	12	3,8	139
231 018 00**	18	16	40	36	15	30	12	1,5	179
231 019 00	19	16	42	38	15	30	12	4,6	192
231 020 00**	20	16	44	40	15	30	12	1,9	207
231 021 00	21	16	46	42	15	30	12	5,7	224
231 022 00	22	16	48	44	15	30	12	6,2	240
231 023 00**	23	16	50	46	15	30	12	2,6	257
231 024 00**	24	16	52	48	15	30	12	2,9	275
231 025 00**	25	16	54	50	15	30	12	3,2	295
231 026 00	26	16	56	52	15	35	12	9,5	344
231 027 00	27	16	58	54	15	35	12	10,3	364
231 028 00**	28	16	60	56	15	35	12	4,1	386
231 029 00	29	16	62	58	15	35	12	12,2	409
231 030 00**	30	16	64	60	15	40	12	4,8	466
231 031 00	31	16	66	62	15	40	12	14,0	489
231 032 00	32	16	68	64	15	40	12	15,1	514
231 034 00	34	16	72	68	15	40	12	17,3	566
231 035 00	35	16	74	70	15	45	12	18,6	632
231 036 00	36	16	76	72	15	45	12	19,7	659
231 037 00	37	16	78	74	15	45	12	21,1	689
231 038 00	38	16	80	76	15	45	12	24,1	720
231 040 00	40	16	84	80	15	50	12	27,1	825
231 042 00	42	16	88	84	15	50	12	30,4	891
231 044 00	44	16	92	88	15	50	12	33,8	955
231 045 00	45	16	94	90	15	50	12	35,6	991
231 046 00	46	16	96	92	15	50	12	37,5	1025
231 047 00	47	16	98	94	15	50	12	39,8	1066
231 048 00	48	16	100	96	15	50	12	42,5	1098
231 050 00	50	16	104	100	15	50	12	48,0	1174
231 052 00	52	16	108	104	15	60	12	54,0	1357
231 053 00	53	16	110	106	15	60	12	57,1	1396
231 054 00	54	16	112	108	15	60	12	60,3	1442
231 055 00	55	16	114	110	15	60	12	63,6	1485
231 056 00	56	16	116	112	15	60	12	67,1	1527
231 057 00	57	16	118	114	15	70	12	70,6	1688
231 058 00	58	16	120	116	15	70	12	74,2	1737
231 059 00	59	16	122	118	15	70	12	77,6	1784
231 060 00	60	16	124	120	15	70	12	81,1	1827
231 062 00	62	16	128	124	15	70	12	88,8	1929
231 063 00	63	16	130	126	15	70	12	92,6	1969
231 064 00	64	16	132	128	15	70	12	95,1	2028
231 065 00	65	16	134	130	20	70	15	97,2	2194
231 067 00	67	16	138	134	20	70	15	102	2306
231 068 00	68	16	140	136	20	70	15	104	2360
231 070 00	70	16	144	140	20	70	15	108	2463
231 072 00	72	16	148	144	20	80	15	113	2769
231 074 00	74	16	152	148	20	80	15	137	2883
231 075 00	75	16	154	150	20	80	15	138	2945
231 076 00	76	16	156	152	20	80	15	140	2982
231 078 00	78	16	160	156	20	80	15	143	3129
231 080 00	80	16	164	160	20	80	20	146	3196
231 085 00	85	16	174	170	20	80	20	149	3513
231 090 00	90	16	184	180	20	80	20	150	3875
231 095 00	95	16	194	190	20	100	20	151	4652
231 100 00	100	16	204	200	20	100	20	154	5056
231 110 00	110	16	224	220	20	100	20	168	5856
231 114 00	114	16	232	228	20	100	20	173	6179
231 120 00	120	16	244	240	20	100	20	181	6822

Material: C45. Gears marked with ** are from 11SMnPb30.
Tooth quality 8d25 DIN 3967. Pressure angle 20°.

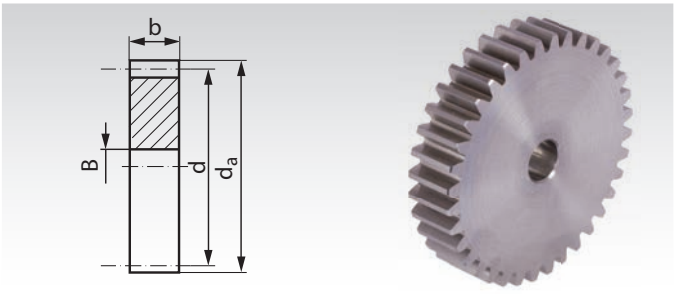

Ordering Details: e.g.: Product No. 241 018 00, Spur Gear, Module 2, 18 Teeth

Product No. without Hub	Number of teeth	b mm	d_a mm	d mm	B^{H7} mm	perm. MT* Nm	Weight g
241 018 00**	18	16	40	36	12	1,5	108
241 020 00**	20	16	44	40	12	1,9	138
241 021 00	21	16	46	42	12	5,7	154
241 022 00	22	16	48	44	12	6,2	170
241 023 00	23	16	50	46	12	7,0	187
241 024 00**	24	16	52	48	12	2,9	206
241 025 00**	25	16	54	50	12	3,2	225
241 026 00	26	16	56	52	12	9,5	244
241 027 00	27	16	58	54	12	10,3	265
241 028 00**	28	16	60	56	12	4,1	286
241 030 00**	30	16	64	60	12	4,8	330
241 032 00**	32	16	68	64	12	5,6	380
241 035 00	35	16	74	70	12	18,6	457
241 036 00	36	16	76	72	12	19,7	486
241 037 00	37	16	78	74	12	21,1	514
241 038 00	38	16	80	76	12	24,1	545
241 039 00	39	16	82	78	12	25,6	578
241 040 00	40	16	84	80	12	27,1	605
241 041 00	41	16	86	82	12	28,7	639
241 042 00	42	16	88	84	12	30,4	668
241 043 00	43	16	90	86	12	32,1	703
241 045 00	45	16	94	90	12	35,6	773
241 047 00	47	16	98	94	12	39,8	843
241 048 00	48	16	100	96	12	42,5	879
241 049 00	49	16	102	98	12	45,2	921
241 050 00	50	16	104	100	12	48,0	954
241 051 00	51	16	106	102	12	50,9	995
241 052 00	52	16	108	104	12	54,0	1038
241 053 00	53	16	110	106	12	57,1	1092
241 054 00	54	16	112	108	12	60,3	1124
241 055 00	55	16	114	110	12	63,6	1153
241 056 00	56	16	116	112	12	67,1	1208
241 057 00	57	16	118	114	12	70,6	1249
241 060 00	60	16	124	120	12	81,1	1385
241 061 00	61	16	126	122	12	85,1	1443
241 063 00	63	16	130	126	12	92,6	1530
241 064 00	64	16	132	128	15	95,1	1576
241 065 00	65	16	134	130	15	97,2	1625
241 067 00	67	16	138	134	15	102	1733
241 070 00	70	16	144	140	15	108	1886
241 072 00	72	16	148	144	15	113	1988
241 075 00	75	16	154	150	15	138	2178
241 076 00	76	16	156	152	15	140	2229
241 078 00	78	16	160	156	15	143	2358
241 080 00	80	16	164	160	20	146	2458
241 085 00	85	16	174	170	20	149	2782
241 090 00	90	16	184	180	20	150	3134
241 095 00	95	16	194	190	20	151	3493
241 096 00	96	16	196	192	20	152	3556
241 100 00	100	16	204	200	20	154	3870
241 114 00	114	16	232	228	20	173	5052
241 120 00	120	16	244	240	20	181	5585

* Basis of calculations see page 197.

** 11SMnPb30.



Reworking within 24h-service possible. Custom made parts on request.

Spur Gears Made from Steel, Module 2.0, Tooth Width b = 20 mm, Milled Teeth, Straight Tooth System

Material: C45. Tooth quality 8d25 DIN 3967.
Pressure angle 20°.

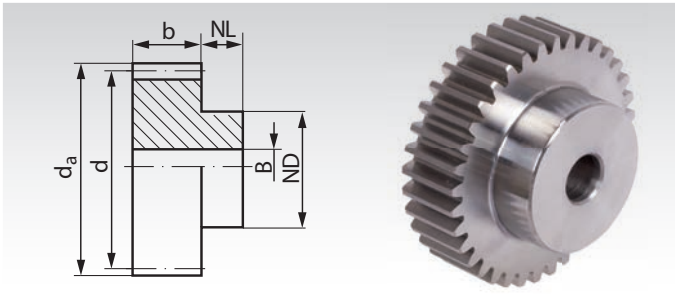

Ordering Details: e.g.: Product No. 231 110 12, Spur Gear, C45, Module 2.0, 12 Teeth

Product No. with Hub	Number of teeth	b mm	d_a mm	d mm	NL mm	ND mm	B^{H7} mm	perm. MT* Nm	Weight g
231 110 12	12	20	28	24	15	18	10	2,8	80
231 110 13	13	20	30	26	15	20	10	3,2	100
231 110 14	14	20	32	28	15	22	10	3,6	120
231 110 15	15	20	34	30	15	24	10	3,9	140
231 110 16	16	20	36	32	15	25	10	4,2	160
231 110 17	17	20	38	34	15	25	10	4,4	180
231 110 18	18	20	40	36	15	25	10	4,9	190
231 110 19	19	20	42	38	15	25	10	5,7	210
231 110 20	20	20	44	40	15	30	10	6,4	260
231 110 21	21	20	46	42	15	30	12	7,2	270
231 110 22	22	20	48	44	15	30	12	8,0	290
231 110 23	23	20	50	46	15	30	12	8,9	310
231 110 24	24	20	52	48	15	35	12	9,9	360
231 110 25	25	20	54	50	15	35	12	10,8	390
231 110 26	26	20	56	52	15	40	12	11,9	450
231 110 27	27	20	58	54	15	40	12	13,0	470
231 110 28	28	20	60	56	15	40	12	14,1	500
231 110 29	29	20	62	58	15	40	14	15,5	520
231 110 30	30	20	64	60	15	40	14	16,6	550
231 110 31	31	20	66	62	15	45	14	17,8	610
231 110 32	32	20	68	64	15	45	14	19,3	650
231 110 33	33	20	70	66	15	45	14	20,8	680
231 110 34	34	20	72	68	15	45	14	22,2	710
231 110 35	35	20	74	70	15	45	14	23,8	740
231 110 36	36	20	76	72	15	45	14	25,3	780
231 110 37	37	20	78	74	15	50	14	26,1	860
231 110 38	38	20	80	76	15	50	14	28,9	900
231 110 39	39	20	82	78	15	50	14	30,6	930
231 110 40	40	20	84	80	15	50	14	32,5	970
231 110 41	41	20	86	82	15	55	16	34,6	1050
231 110 42	42	20	88	84	15	55	16	36,5	1090
231 110 43	43	20	90	86	15	55	16	38,6	1130
231 110 44	44	20	92	88	15	60	16	40,6	1230
231 110 45	45	20	94	90	15	60	16	42,7	1270
231 110 46	46	20	96	92	15	60	16	45	1310
231 110 47	47	20	98	94	15	70	16	47,8	1480
231 110 48	48	20	100	96	15	70	16	51	1530
231 110 49	49	20	102	98	15	70	16	54,2	1570
231 110 50	50	20	104	100	15	70	16	57,6	1620
231 110 51	51	20	106	102	15	70	16	61,1	1670
231 110 52	52	20	108	104	15	70	16	64,8	1720
231 110 53	53	20	110	106	15	70	16	68,5	1780
231 110 54	54	20	112	108	15	70	16	72,4	1830
231 110 55	55	20	114	110	15	70	16	76,3	1880
231 110 56	56	20	116	112	15	70	16	80,5	1940
231 110 57	57	20	118	114	15	70	16	84,7	1990
231 110 58	58	20	120	116	15	70	16	89	2050
231 110 60	60	20	124	120	15	70	16	97,3	2160
231 110 62	62	20	128	124	15	80	16	107	2420
231 110 63	63	20	130	126	15	80	16	111	2480
231 110 64	64	20	132	128	15	80	16	114	2550
231 110 65	65	20	134	130	15	80	16	117	2610
231 110 66	66	20	136	132	15	80	16	120	2670
231 110 67	67	20	138	134	15	80	16	122	2740
231 110 69	69	20	142	138	15	80	16	127	2870
231 110 70	70	20	144	140	15	80	16	130	2940
231 110 75	75	20	154	150	15	80	20	166	3250
231 110 80	80	20	164	160	15	80	20	175	3600
231 110 90	90	20	184	180	15	90	20	180	4570
231 111 00	100	20	204	200	15	100	20	185	5670
231 111 20	120	20	244	240	15	100	20	217	7790

Material: C45. Tooth quality 8d25 DIN 3967. Pressure angle 20°.

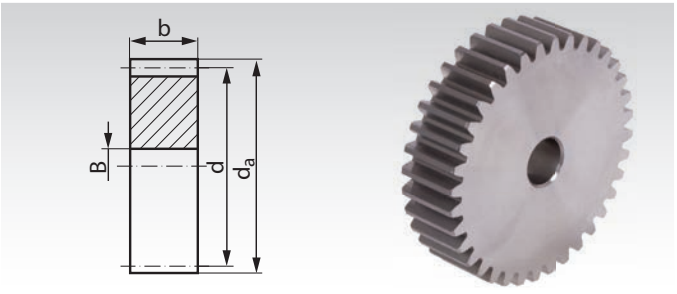

Ordering Details: e.g.: Product No. 241 110 18, Spur Gear, C45 Module 2.0, 18 Teeth

Product No. without Hub	Number of teeth	b mm	d_a mm	d mm	B^{H7} mm	perm. MT* Nm	Weight g
241 110 18	18	20	40	36	10	4,9	145
241 110 20	20	20	44	40	10	6,4	180
241 110 24	24	20	52	48	12	9,9	260
241 110 25	25	20	54	50	12	10,8	285
241 110 30	30	20	64	60	14	16,6	410
241 110 35	35	20	74	70	14	23,8	570
241 110 36	36	20	76	72	14	25,3	600
241 110 40	40	20	84	80	14	32,5	750
241 110 45	45	20	94	90	16	42,7	950
241 110 48	48	20	100	96	16	51	1080
241 110 50	50	20	104	100	16	57,6	1180
241 110 72	72	20	148	144	16	135	2500
241 110 75	75	20	154	150	20	166	2710
241 110 76	76	20	156	152	20	168	2790
241 110 80	80	20	164	160	20	175	3090
241 110 85	85	20	174	170	20	179	3500
241 110 90	90	20	184	180	20	180	3930
241 110 95	95	20	194	190	20	181	4390
241 111 00	100	20	204	200	20	185	4870
241 111 10	110	20	224	220	20	201	5900
241 111 14	114	20	232	228	20	208	6340
241 111 20	120	20	244	240	20	217	7030
241 111 27	127	20	258	254	20	235	7890

* Basis of calculations see page 197.

Gears with hardened teeth Page 240





Reworking within 24h-service possible. Custom made parts on request.

Spur Gears Made from Steel, Module 2.5, Tooth Width b = 20 mm, Milled Teeth, Straight Tooth System

Material: C45. Tooth quality 8d25 DIN 3967.
Pressure angle 20°.

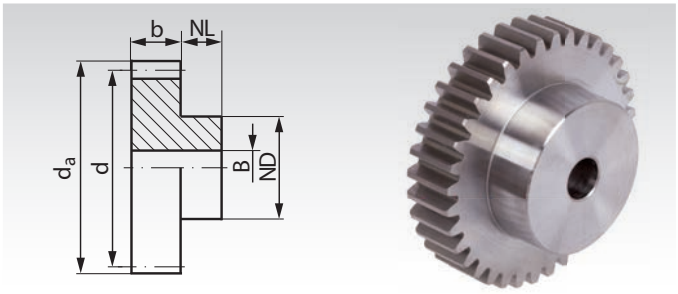

Ordering Details: e.g.: Product No. 232 012 00, Spur Gear, Steel C45, Module 2.5, 12 Teeth

Product No. with Hub	Number of teeth	b mm	d_a mm	d mm	NL mm	ND mm	B^{H7} mm	perm. MT* Nm	Weight kg
232 012 00	12	20	35	30	15	20	12	4,9	0,11
232 013 00	13	20	37,5	32,5	15	20	12	5,6	0,12
232 014 00	14	20	40	35	15	20	12	6,3	0,14
232 015 00	15	20	42,5	37,5	15	25	12	6,9	0,19
232 016 00	16	20	45	40	15	25	12	7,4	0,21
232 017 00	17	20	47,5	42,5	15	25	12	7,7	0,23
232 018 00	18	20	50	45	15	30	12	8,7	0,29
232 019 00	19	20	52,5	47,5	15	30	12	9,9	0,31
232 020 00	20	20	55	50	15	30	12	11,2	0,34
232 021 00	21	20	57,5	52,5	15	30	12	12,6	0,38
232 022 00	22	20	60	55	15	30	12	14,1	0,41
232 023 00	23	20	62,5	57,5	15	40	12	15,6	0,51
232 024 00	24	20	65	60	15	40	12	17,3	0,54
232 025 00	25	20	67,5	62,5	15	40	12	19,0	0,58
232 026 00	26	20	70	65	15	40	12	20,8	0,62
232 027 00	27	20	72,5	67,5	15	40	12	22,7	0,66
232 028 00	28	20	75	70	15	40	12	24,7	0,70
232 030 00	30	20	80	75	15	40	12	29,1	0,79
232 032 00	32	20	85	80	15	50	15	33,8	0,95
232 034 00	34	20	90	85	15	50	15	38,9	1,04
232 035 00	35	20	92,5	87,5	15	50	15	41,6	1,10
232 036 00	36	20	95	90	15	60	15	44,4	1,25
232 038 00	38	20	100	95	15	60	15	50,7	1,38
232 040 00	40	20	105	100	20	60	15	59,3	1,60
232 042 00	42	20	110	105	20	60	15	68,5	1,72
232 045 00	45	20	117,5	112,5	20	60	15	83,9	1,92
232 046 00	46	20	120	115	20	60	15	89,4	1,98
232 048 00	48	20	125	120	20	60	15	100,3	2,14
232 050 00	50	20	130	125	20	70	15	112,2	2,43
232 052 00	52	20	135	130	20	70	15	124,3	2,60
232 054 00	54	20	140	135	20	70	20	137,2	2,73
232 055 00	55	20	142,5	137,5	20	70	20	143,9	2,78
232 056 00	56	20	145	140	20	70	20	150,9	2,89
232 060 00	60	20	155	150	20	70	20	180,9	3,24
232 062 00	62	20	160	155	20	70	20	197,3	3,43
232 065 00	65	20	167,5	162,5	20	80	20	238,3	3,90
232 070 00	70	20	180	175	20	80	20	269,6	4,44
232 072 00	72	20	185	180	20	80	20	276,3	4,62
232 075 00	75	20	192,5	187,5	20	90	20	282	5,19
232 080 00	80	20	205	200	20	90	20	285	5,79
232 082 00	82	20	210	205	20	90	20	286	6,05
232 085 00	85	20	217,5	212,5	20	100	20	288	6,69
232 090 00	90	20	230	225	20	100	20	290	7,31
232 092 00	92	20	235	230	20	100	20	292	7,60
232 095 00	95	20	242,5	237,5	20	100	25	301	7,97
232 100 00	100	20	255	250	20	100	25	315	8,74
232 110 00	110	20	280	275	20	120	25	340	10,86
232 120 00	120	20	305	300	20	120	25	365	12,64
232 127 00	127	20	322,5	317,5	20	120	25	380	13,96

Material: C45. Tooth quality 8d25 DIN 3967.
Pressure angle 20°.

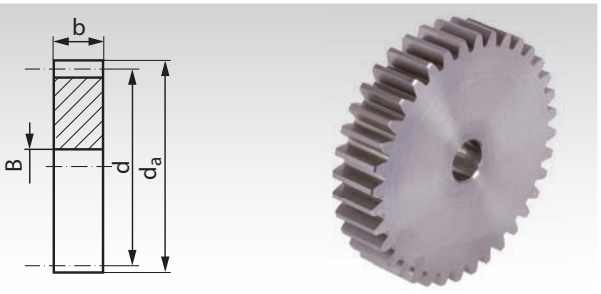

Ordering Details: e.g.: Product No. 242 018 00, Spur Gear, Steel C45, Module 2.5, 18 Teeth

Product No. without Hub	Number of teeth	b mm	d_a mm	d mm	B^{H7} mm	perm. MT* Nm	Weight kg
242 018 00	18	20	50	45	12	8,7	0,23
242 020 00	20	20	55	50	12	11,2	0,29
242 022 00	22	20	60	55	12	14,1	0,34
242 023 00	23	20	62,5	57,5	12	15,6	0,37
242 024 00	24	20	65	60	12	17,3	0,41
242 025 00	25	20	67,5	62,5	12	19,0	0,45
242 026 00	26	20	70	65	12	20,8	0,49
242 029 00	29	20	77,5	72,5	12	26,0	0,61
242 030 00	30	20	80	75	12	29,1	0,66
242 031 00	31	20	82,5	77,5	12	31,4	0,70
242 033 00	33	20	87,5	82,5	15	36,3	0,79
242 034 00	34	20	90	85	15	38,9	0,84
242 035 00	35	20	92,5	87,5	15	41,6	0,89
242 037 00	37	20	97,5	92,5	15	47,3	1,00
242 038 00	38	20	100	95	15	50,7	1,06
242 039 00	39	20	102,5	97,5	15	54,9	1,12
242 040 00	40	20	105	100	15	59,3	1,18
242 041 00	41	20	107,5	102,5	15	65,8	1,24
242 043 00	43	20	112,5	107,5	15	73,5	1,38
242 044 00	44	20	115	110	15	78,6	1,43
242 045 00	45	20	117,5	112,5	15	83,9	1,50
242 047 00	47	20	122,5	117,5	15	95,0	1,64
242 048 00	48	20	125	120	15	100	1,71
242 049 00	49	20	127,5	122,5	15	107	1,79
242 050 00	50	20	130	125	15	112	1,86
242 051 00	51	20	132,5	127,5	15	118	1,94
242 053 00	53	20	137,5	132,5	15	131	2,10
242 054 00	54	20	140	135	20	137	2,17
242 056 00	56	20	145	140	20	151	2,33
242 057 00	57	20	147,5	142,5	20	158	2,43
242 060 00	60	20	155	150	20	181	2,69
242 070 00	70	20	180	175	20	270	3,68
242 076 00	76	20	195	190	20	284	4,35
242 080 00	80	20	205	200	20	285	4,83
242 090 00	90	20	230	225	20	290	6,13
242 100 00	100	20	255	250	20	315	7,62
242 114 00	114	20	290	285	25	349	9,80
242 120 00	120	20	305	300	25	365	10,94

* Basis of calculations see page 197.

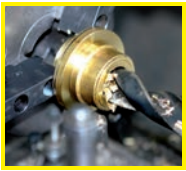

Reworking within 24h-service possible. Custom made parts on request.

Spur Gears Made from Steel, Module 2.5, Tooth Width b = 25 mm, Milled Teeth, Straight Tooth System

Material: C45. Tooth quality 8d25 DIN 3967.
Pressure angle 20°.

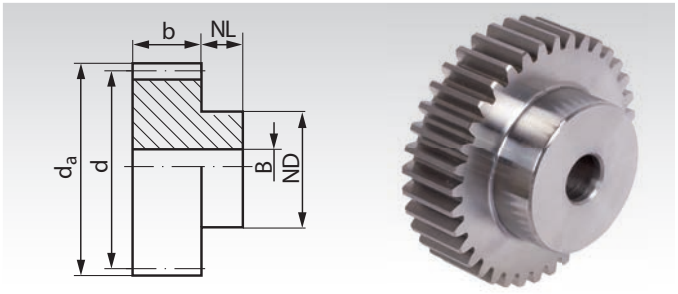

Ordering Details: e.g.: Product No. 232 110 12, Spur Gear, C45, Module 2.5, 12 Teeth

Product No. with Hub	Number of teeth	b mm	d_a mm	d mm	NL mm	ND mm	B^{H7} mm	perm. MT* Nm	Weight kg
232 110 12	12	25	35	30	20	22	10	5,9	0,17
232 110 13	13	25	37,5	32,5	20	25	10	6,7	0,21
232 110 14	14	25	40	35	20	28	10	7,6	0,25
232 110 15	15	25	42,5	37,5	20	30	10	8,3	0,30
232 110 16	16	25	45	40	20	32	12	8,9	0,33
232 110 17	17	25	47,5	42,5	20	35	12	9,2	0,38
232 110 18	18	25	50	45	20	35	12	10,4	0,42
232 110 19	19	25	52,5	47,5	20	35	12	11,9	0,45
232 110 20	20	25	55	50	20	40	12	13,4	0,54
232 110 21	21	25	57,5	52,5	20	40	14	15,1	0,56
232 110 22	22	25	60	55	20	45	14	16,9	0,66
232 110 23	23	25	62,5	57,5	20	45	14	18,7	0,70
232 110 24	24	25	65	60	20	45	14	20,8	0,74
232 110 25	25	25	67,5	62,5	20	50	14	22,8	0,85
232 110 26	26	25	70	65	20	50	14	25,0	0,90
232 110 27	27	25	72,5	67,5	20	50	14	27,3	0,95
232 110 28	28	25	75	70	20	50	14	29,6	1,00
232 110 29	29	25	77,5	72,5	20	50	14	32,7	1,06
232 110 30	30	25	80	75	20	55	14	34,9	1,18
232 110 31	31	25	82,5	77,5	20	55	16	37,5	1,22
232 110 32	32	25	85	80	20	55	16	40,6	1,28
232 110 33	33	25	87,5	82,5	20	55	16	43,8	1,34
232 110 34	34	25	90	85	20	55	16	46,7	1,41
232 110 35	35	25	92,5	87,5	20	60	16	50,2	1,54
232 110 36	36	25	95	90	20	60	16	53,3	1,61
232 110 37	37	25	97,5	92,5	20	60	16	54,9	1,68
232 110 38	38	25	100	95	20	60	16	60,8	1,75
232 110 39	39	25	102,5	97,5	20	60	16	65,3	1,83
232 110 40	40	25	105	100	20	70	16	71,2	2,06
232 110 41	41	25	107,5	102,5	20	70	16	77,4	2,14
232 110 42	42	25	110	105	20	70	16	82,2	2,22
232 110 43	43	25	112,5	107,5	20	70	16	92,4	2,30
232 110 44	44	25	115	110	20	70	16	96,6	2,38
232 110 45	45	25	117,5	112,5	20	70	16	100	2,47
232 110 46	46	25	120	115	20	70	20	107	2,52
232 110 47	47	25	122,5	117,5	20	80	20	114	2,80
232 110 48	48	25	125	120	20	80	20	120	2,88
232 110 49	49	25	127,5	122,5	20	80	20	128	2,98
232 110 50	50	25	130	125	20	80	20	135	3,07
232 110 51	51	25	132,5	127,5	20	80	20	143	3,17
232 110 52	52	25	135	130	20	90	20	149	3,48
232 110 53	53	25	37,5	132,5	20	90	20	156	3,58
232 110 54	54	25	140	135	20	90	20	165	3,68
232 110 55	55	25	142,5	137,5	20	90	20	173	3,78
232 110 56	56	25	145	140	20	100	20	181	4,13
232 110 57	57	25	147,5	142,5	20	100	20	190	4,23
232 110 58	58	25	150	145	20	100	20	199	4,34
232 110 59	59	25	152,5	147,5	20	100	20	208	4,46
232 110 60	60	25	155	150	20	100	20	217	4,57
232 110 70	70	25	180	175	20	100	20	324	5,74
232 110 90	90	25	230	225	20	120	25	348	9,24
232 111 20	120	25	305	300	20	120	25	438	15,19

* Basis of calculations see page 197.

Material: C45. Tooth quality 8d25 DIN 3967.
Pressure angle 20°.

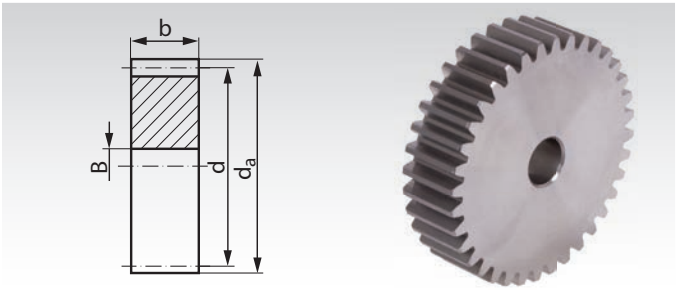

Ordering Details: e.g.: Product No. 242 110 18, Spur Gear, C45, Module 2.5, 18 Teeth

Product No. without Hub	Number of teeth	b mm	d_a mm	d mm	B^{H7} mm	perm. MT* Nm	Weight kg
242 110 18	18	25	50	45	12	10,4	0,28
242 110 20	20	25	55	50	12	13,4	0,36
242 110 22	22	25	60	55	14	16,9	0,43
242 110 24	24	25	65	60	14	20,8	0,51
242 110 25	25	25	67,5	62,5	14	22,8	0,56
242 110 30	30	25	80	75	14	34,9	0,82
242 110 40	40	25	105	100	16	71,2	1,47
242 110 48	48	25	125	120	20	120	2,12
242 110 50	50	25	130	125	20	135	2,30
242 110 60	60	25	155	150	20	217	3,34
242 110 65	65	25	167,5	162,5	20	286	3,99
242 110 70	70	25	180	175	20	324	4,64
242 110 72	72	25	185	180	20	332	4,91
242 110 75	75	25	192,5	187,5	20	338	5,33
242 110 76	76	25	195	190	20	340	5,48
242 110 80	80	25	205	200	25	342	6,04
242 110 85	85	25	217,5	212,5	25	346	6,84
242 110 90	90	25	230	225	25	348	7,68
242 110 95	95	25	242,5	237,5	25	361	8,57
242 111 00	100	25	255	250	25	378	9,51
242 111 10	110	25	280	275	25	408	11,53
242 111 14	114	25	290	285	25	419	12,39
242 111 20	120	25	305	300	25	438	13,74
242 111 27	127	25	322,5	317,5	25	453	15,40

Gears with hardened teeth Page 241





Reworking within 24h-service possible. Custom made parts on request.

Spur Gears Made from Steel, Module 3.0, Tooth Width b = 25 mm, Milled Teeth, Straight Tooth System

Material: C45. Tooth quality 8d25 DIN 3967.
Pressure angle 20°.

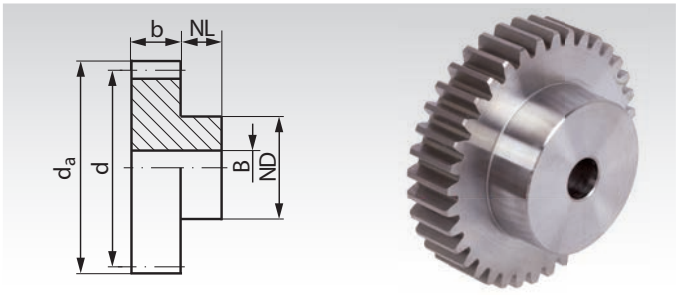

Ordering Details: e.g.: Product No. 233 012 00, Spur Gear, Steel C45, Module 3, 12 Teeth

Product No. with Hub	Number of teeth	b mm	d_a mm	d mm	NL mm	ND mm	B^{H7} mm	perm. MT** Nm	Weight kg
233 012 00	12	25	42	36	15	25	12	9,30	0,21
233 013 00	13	25	45	39	15	25	12	10,50	0,24
233 014 00	14	25	48	42	15	25	12	11,80	0,28
233 015 00	15	25	51	45	15	35	12	13,00	0,37
233 016 00	16	25	54	48	15	35	12	14,00	0,41
233 017 00	17	25	57	51	15	35	12	14,30	0,46
233 018 00	18	25	60	54	15	45	12	16,50	0,58
233 019 00	19	25	63	57	15	45	12	18,80	0,63
233 020 00	20	25	66	60	15	45	15	21,30	0,67
233 021 00	21	25	69	63	15	45	15	23,90	0,72
233 022 00	22	25	72	66	15	45	15	26,70	0,78
233 023 00	23	25	75	69	15	50	15	29,60	0,89
233 024 00	24	25	78	72	15	50	15	32,70	0,95
233 025 00	25	25	81	75	15	50	15	36,00	1,01
233 026 00	26	25	84	78	15	50	15	39,50	1,08
233 027 00	27	25	87	81	15	50	15	43,20	1,16
233 028 00	28	25	90	84	15	50	20	47,00	1,19
233 030 00	30	25	96	90	15	50	20	55,20	1,35
233 032 00	32	25	102	96	15	60	20	64,90	1,62
233 035 00	35	25	111	105	15	60	20	85,00	1,90
233 036 00	36	25	114	108	15	60	20	92,40	2,00
233 038 00	38	25	120	114	20	60	20	108,20	2,30
233 040 00	40	25	126	120	20	70	20	124,70	2,67
233 042 00	42	25	132	126	20	70	20	142,30	2,89
233 045 00	45	25	141	135	20	70	20	170,20	3,26
233 048 00	48	25	150	144	20	80	20	201,50	3,84
233 050 00	50	25	156	150	20	80	20	224,30	4,10
233 052 00	52	25	162	156	20	80	20	248,60	4,39
233 054 00	54	25	168	162	20	80	20	274,60	4,66
233 055 00	55	25	171	165	20	80	20	288,20	4,82
233 056 00	56	25	174	168	20	90	20	302,20	5,18
233 057 00	57	25	177	171	20	90	20	316,70	5,33
233 058 00	58	25	180	174	20	90	20	331,50	5,49
233 060 00	60	25	186	180	20	90	20	380,30	5,83
233 065 00	65	25	201	195	20	90	20	461,90	6,67
233 067 00	67	25	207	201	20	90	20	476,40	7,04
233 070 00	70	25	216	210	20	90	20	480,00	7,64
233 072 00	72	25	222	216	20	100	20	482,00	8,22
233 075 00	75	25	231	225	20	100	20	484,00	8,87
233 076 00	76	25	234	228	20	100	30	486,00	8,94
233 080 00	80	25	246	240	20	100	30	490,00	9,77
233 090 00	90	25	276	270	20	100	30	530,40	12,12
233 100 00	100	25	306	300	20	100	30	580,00	14,72
233 114 00	114	25	348	342	20	100	30	644,00	18,79
233 120 00	120	25	366	360	20	100	30	673,00	21,00

* Basis of calculations see page 197.

Material: C45. Tooth quality 8d25 DIN 3967.
Pressure angle 20°.

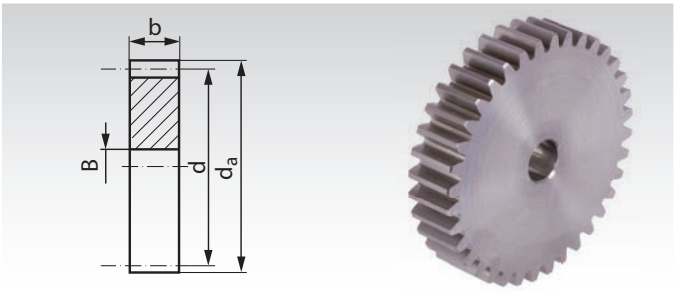

Ordering Details: e.g.: Product No. 243 018 00, Spur Gear, Steel C45 , Module 3, 18 Teeth

Product No. without Hub	Number of teeth	b mm	d_a mm	d mm	B^{H7} mm	perm. MT** Nm	Weight kg
243 018 00	18	25	60	54	12	16,50	0,42
243 020 00	20	25	66	60	15	21,30	0,50
243 021 00	21	25	69	63	15	23,90	0,55
243 024 00	24	25	78	72	15	32,70	0,74
243 025 00	25	25	81	75	15	36,00	0,81
243 028 00	28	25	90	84	15	47,00	1,02
243 030 00	30	25	96	90	20	55,20	1,15
243 035 00	35	25	111	105	20	85,00	1,61
243 037 00	37	25	117	111	20	100	1,80
243 038 00	38	25	120	114	20	108	1,91
243 040 00	40	25	126	120	20	125	2,11
243 042 00	42	25	132	126	20	142	2,34
243 045 00	45	25	141	135	20	170	2,70
243 046 00	46	25	144	138	20	180	2,81
243 047 00	47	25	147	141	20	191	2,95
243 048 00	48	25	150	144	20	202	3,09
243 050 00	50	25	156	150	20	224	3,34
243 052 00	52	25	162	156	20	249	3,64
243 053 00	53	25	165	159	20	261	3,78
243 056 00	56	25	174	168	20	302	4,23
243 058 00	58	25	180	174	20	332	4,54
243 060 00	60	25	186	180	20	380	4,87
243 065 00	65	25	201	195	20	462	5,72
243 067 00	67	25	207	201	20	476	6,09
243 070 00	70	25	216	210	20	480	6,67
243 072 00	72	25	222	216	30	482	6,99
243 076 00	76	25	234	228	30	486	7,80
243 080 00	80	25	246	240	30	490	8,63
243 090 00	90	25	276	270	30	530	11,00
243 096 00	96	25	294	288	30	559	12,53
243 100 00	100	25	306	300	30	580	13,61
243 114 00	114	25	348	342	30	644	17,72



Reworking within 24h-service possible. Custom made parts on request.

Spur Gears Made from Steel, Module 3.0, Tooth Width b = 30 mm, Milled Teeth, Straight Tooth System

Material: C45. Tooth quality 8d25 DIN 3967.
Pressure angle 20°.

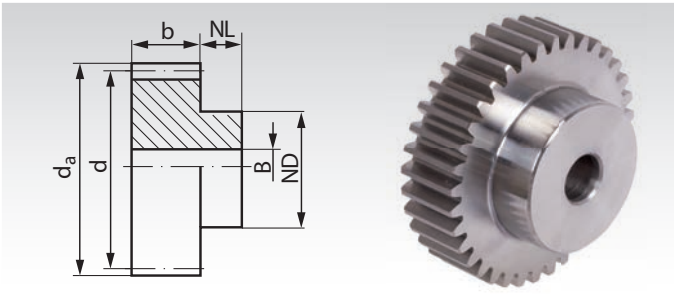

Ordering Details: e.g.: Product No. 233 110 12, Spur Gear, C45, Module 3.0, 12 Teeth

Product No. with Hub	Number of teeth	b mm	d_a mm	d mm	NL mm	ND mm	B^{H7} mm	perm. MT* Nm	Weight kg
233 110 12	12	30	42	36	20	27	12	10,7	0,28
233 110 13	13	30	45	39	20	30	12	12,1	0,34
233 110 14	14	30	48	42	20	33	12	13,6	0,41
233 110 15	15	30	51	45	20	35	12	15	0,47
233 110 16	16	30	54	48	20	38	14	16,1	0,54
233 110 17	17	30	57	51	20	42	14	17	0,63
233 110 18	18	30	60	54	20	45	14	19	0,72
233 110 19	19	30	63	57	20	45	14	21,6	0,78
233 110 20	20	30	66	60	20	45	14	24,5	0,84
233 110 21	21	30	69	63	20	45	16	27,5	0,89
233 110 22	22	30	72	66	20	50	16	30,7	1,02
233 110 23	23	30	75	69	20	50	16	34	1,10
233 110 24	24	30	78	72	20	50	16	37,6	1,18
233 110 25	25	30	81	75	20	60	16	41,4	1,39
233 110 26	26	30	84	78	20	60	16	45,4	1,48
233 110 27	27	30	87	81	20	60	16	49,7	1,56
233 110 28	28	30	90	84	20	60	16	54,1	1,66
233 110 29	29	30	93	87	20	60	16	59,2	1,75
233 110 30	30	30	96	90	20	60	16	63,5	1,85
233 110 31	31	30	99	93	20	60	16	69,2	1,95
233 110 32	32	30	102	96	20	70	16	74,6	2,21
233 110 33	33	30	105	99	20	70	16	82,8	2,32
233 110 34	34	30	108	102	20	70	16	88,6	2,43
233 110 35	35	30	111	105	20	70	16	97,8	2,55
233 110 36	36	30	114	108	20	70	20	106	2,62
233 110 37	37	30	117	111	20	70	20	115	2,74
233 110 38	38	30	120	114	20	80	20	124	3,05
233 110 39	39	30	123	117	20	80	20	135	3,18
233 110 40	40	30	126	120	20	80	20	143	3,31
233 110 41	41	30	129	123	20	80	20	155	3,44
233 110 42	42	30	132	126	20	80	20	164	3,58
233 110 43	43	30	135	129	20	80	20	175	3,72
233 110 44	44	30	138	132	20	90	20	186	4,07
233 110 45	45	30	141	135	20	90	20	196	4,22
233 110 46	46	30	144	138	20	90	20	207	4,37
233 110 47	47	30	147	141	20	100	20	220	4,76
233 110 48	48	30	150	144	20	100	20	232	4,92
233 110 50	50	30	156	150	20	100	20	258	5,18
233 110 60	60	30	186	180	20	100	20	437	6,97
233 110 65	65	30	201	195	20	100	20	531	7,99
233 110 70	70	30	216	210	20	100	25	552	9,03
233 110 75	75	30	231	225	20	120	25	557	10,75
233 110 90	90	30	276	270	20	120	25	610	14,79
233 111 20	120	30	366	360	20	120	30	774	24,98

* Basis of calculations see page 197.

Material: C45. Tooth quality 8d25 DIN 3967.
Pressure angle 20°.

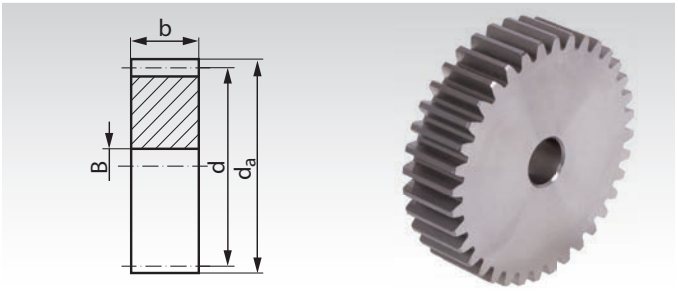

Ordering Details: e.g.: Product No. 243 110 18, Spur Gear, C45, Module 3.0, 18 Teeth

Product No. without Hub	Number of teeth	b mm	d_a mm	d mm	B^{H7} mm	perm. MT* Nm	Weight kg
243 110 18	18	30	60	54	14	19	0,49
243 110 20	20	30	66	60	14	24,5	0,62
243 110 24	24	30	78	72	16	37,6	0,89
243 110 25	25	30	81	75	16	41,4	0,97
243 110 30	30	30	96	90	16	63,5	1,42
243 110 40	40	30	126	120	20	143	2,54
243 110 48	48	30	150	144	20	232	3,69
243 110 50	50	30	156	150	20	258	4,06
243 110 52	52	30	162	156	20	286	4,40
243 110 55	55	30	171	165	20	331	4,93
243 110 57	57	30	177	171	20	364	5,30
243 110 60	60	30	186	180	20	437	5,89
243 110 65	65	30	201	195	20	531	6,92
243 110 70	70	30	216	210	25	552	8,00
243 110 72	72	30	222	216	25	554	8,47
243 110 75	75	30	231	225	25	557	9,21
243 110 76	76	30	234	228	25	559	9,46
243 110 80	80	30	246	240	25	564	10,49
243 110 85	85	30	261	255	25	580	11,86
243 110 90	90	30	276	270	25	610	13,32
243 110 95	95	30	291	285	25	640	14,86
243 111 00	100	30	306	300	25	667	16,48
243 111 10	110	30	336	330	25	705	19,97
243 111 14	114	30	348	342	30	740	21,40
243 111 20	120	30	366	360	30	774	23,74
243 111 27	127	30	387	381	30	800	26,61

Gears with hardened teeth Page 241





Reworking within 24h-service possible. Custom made parts on request.

Spur Gears Made from Steel, Module 4.0, Tooth Width b = 30 mm, Milled Teeth, Straight Tooth System

Material: C45. Tooth quality 8d25 DIN 3967.
Pressure angle 20°.

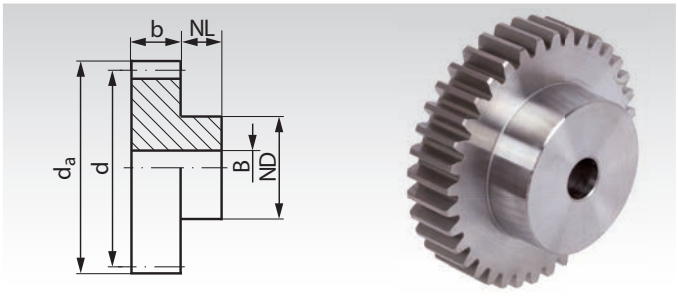

Ordering Details: e.g.: Product No. 234 012 00, Spur Gear, Steel C45, Module 4, 12 Teeth

Product No. with Hub	Number of teeth	b mm	d_a mm	d mm	NL mm	ND mm	B^{H7} mm	perm. MT** Nm	Weight kg
234 012 00	12	30	56	48	20	35	15	21	0,48
234 013 00	13	30	60	52	20	35	15	24	0,55
234 014 00	14	30	64	56	20	40	15	27	0,68
234 015 00	15	30	68	60	20	40	15	30	0,76
234 016 00	16	30	72	64	20	40	20	32	0,80
234 017 00	17	30	76	68	20	40	20	34	0,90
234 018 00	18	30	80	72	20	50	20	38	1,11
234 019 00	19	30	84	76	20	50	20	43	1,21
234 020 00	20	30	88	80	20	50	20	49	1,33
234 021 00	21	30	92	84	20	50	20	55	1,45
234 022 00	22	30	96	88	20	50	20	62	1,58
234 023 00	23	30	100	92	20	50	20	69	1,70
234 024 00	24	30	104	96	20	60	20	76	1,98
234 025 00	25	30	108	100	20	60	20	87	2,12
234 026 00	26	30	112	104	20	60	20	97	2,28
234 027 00	27	30	116	108	20	60	20	109	2,43
234 028 00	28	30	120	112	20	60	20	122	2,58
234 030 00	30	30	128	120	20	70	20	148	3,08
234 032 00	32	30	136	128	20	70	20	176	3,44
234 035 00	35	30	148	140	20	70	25	222	3,97
234 036 00	36	30	152	144	20	70	25	239	4,18
234 038 00	38	30	160	152	20	70	25	275	4,61
234 040 00	40	30	168	160	20	80	25	315	5,27
234 042 00	42	30	176	168	20	80	25	358	5,77
234 044 00	44	30	184	176	20	80	25	404	6,24
234 045 00	45	30	188	180	20	80	25	429	6,52
234 046 00	46	30	192	184	20	80	25	456	6,79
234 048 00	48	30	200	192	20	100	25	510	7,78
234 050 00	50	30	208	200	20	100	25	568	8,36
234 052 00	52	30	216	208	20	100	25	636	8,96
234 054 00	54	30	224	216	20	100	25	698	9,50
234 055 00	55	30	228	220	20	100	25	730	10,00
234 056 00	56	30	232	224	20	100	25	763	10,50
234 058 00	58	30	240	232	20	100	25	832	11,00
234 060 00	60	30	248	240	20	100	25	905	11,50
234 065 00	65	30	268	260	20	100	30	976	13,50
234 067 00	67	30	276	268	20	100	30	980	14,00
234 070 00	70	30	288	280	20	100	30	985	15,30
234 072 00	72	30	296	288	20	100	30	993	16,00
234 075 00	75	30	308	300	20	100	30	1030	17,50
234 076 00	76	30	312	304	20	120	30	1042	18,38
234 080 00	80	30	328	320	20	120	30	1083	20,00
234 090 00	90	30	368	360	20	120	30	1200	25,20
234 096 00	96	30	392	384	20	120	30	1270	28,50
234 100 00	100	30	408	400	20	120	30	1320	31,00

* Basis of calculations see page 197.

Material: C45. Tooth quality 8d25 DIN 3967.
Pressure angle 20°.

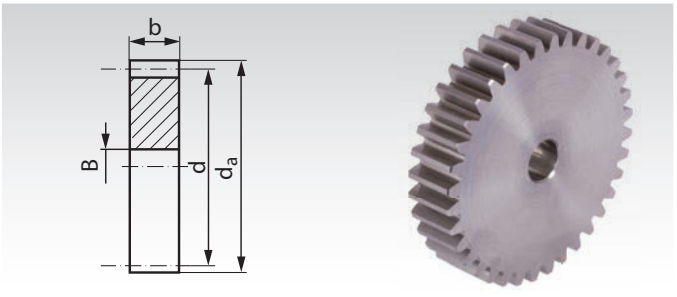

Ordering Details: e.g.: Product No. 244 020 00, Spur Gear, Steel C45 , Module 4, 20 Teeth

Product No. without Hub	Number of teeth	b mm	d_a mm	d mm	B^{H7} mm	perm. MT** Nm	Weight kg
244 020 00	20	30	88	80	20	49	1,07
244 024 00	24	30	104	96	20	76	1,59
244 025 00	25	30	108	100	20	87	1,73
244 030 00	30	30	128	120	25	148	2,49
244 035 00	35	30	148	140	25	222	3,44
244 036 00	36	30	152	144	25	239	3,55
244 037 00	37	30	156	148	25	256	3,86
244 038 00	38	30	160	152	25	275	4,04
244 040 00	40	30	168	160	25	315	4,55
244 042 00	42	30	176	168	25	358	5,02
244 045 00	45	30	188	180	25	429	5,78
244 046 00	46	30	192	184	25	456	6,08
244 047 00	47	30	196	188	25	483	6,34
244 048 00	48	30	200	192	25	510	6,62
244 050 00	50	30	208	200	25	568	7,18
244 052 00	52	30	216	208	25	636	7,78
244 056 00	56	30	232	224	25	763	9,06
244 060 00	60	30	248	240	25	905	10,42
244 065 00	65	30	268	260	30	976	12,19
244 067 00	67	30	276	268	30	980	12,99
244 070 00	70	30	288	280	30	985	14,14
244 076 00	76	30	312	304	30	1042	17,00
244 080 00	80	30	328	320	30	1083	18,50
244 090 00	90	30	368	360	30	1200	23,50
244 096 00	96	30	392	384	30	1270	26,89



Reworking within 24h-service possible. Custom made parts on request.

Spur Gears Made from Steel, Module 4.0, Tooth Width b = 40 mm, Milled Teeth, Straight Tooth System

Material: C45. Tooth quality 8d25 DIN 3967.
Pressure angle 20°.

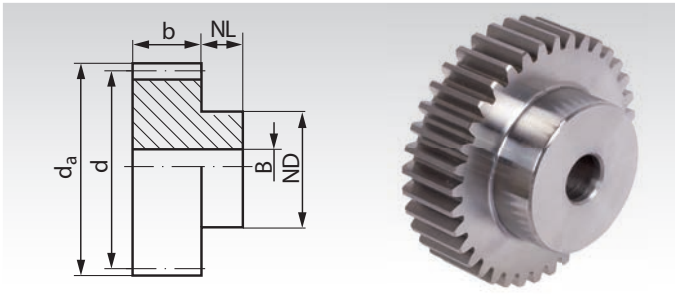

Ordering Details: e.g.: Product No. 234 110 12, Spur Gear, C45, Module 4.0, 12 Teeth

Product No. with Hub	Number of teeth	b mm	d_a mm	d mm	NL mm	ND mm	B^{H7} mm	perm. MT* Nm	Weight kg
234 110 12	12	40	56	48	20	35	14	26	0,63
234 110 13	13	40	60	52	20	40	14	30	0,78
234 110 14	14	40	64	56	20	45	14	34	0,93
234 110 15	15	40	68	60	20	45	14	38	1,05
234 110 16	16	40	72	64	20	50	16	40	1,20
234 110 17	17	40	76	68	20	50	16	43	1,33
234 110 18	18	40	80	72	20	50	16	48	1,47
234 110 19	19	40	84	76	20	60	16	54	1,75
234 110 20	20	40	88	80	20	60	16	61	1,90
234 110 21	21	40	92	84	20	70	16	69	2,22
234 110 22	22	40	96	88	20	70	16	78	2,39
234 110 23	23	40	100	92	20	75	20	86	2,60
234 110 24	24	40	104	96	20	75	20	95	2,79
234 110 25	25	40	108	100	20	75	20	109	2,98
234 110 26	26	40	112	104	20	75	20	121	3,18
234 110 27	27	40	116	108	20	75	20	136	3,39
234 110 28	28	40	120	112	20	75	20	153	3,60
234 110 29	29	40	124	116	20	75	20	171	3,83
234 110 30	30	40	128	120	20	75	20	185	4,06
234 110 31	31	40	132	124	20	80	20	205	4,39
234 110 32	32	40	136	128	20	80	20	220	4,64
234 110 33	33	40	140	132	20	80	20	248	4,90
234 110 34	34	40	144	136	20	80	20	264	5,16
234 110 35	35	40	148	140	20	80	20	278	5,43
234 110 36	36	40	152	144	20	80	25	299	5,63
234 110 38	38	40	160	152	20	80	25	344	6,14
234 110 40	40	40	168	160	20	80	25	394	6,74
234 110 50	50	40	208	200	20	100	25	710	10,66
234 110 60	60	40	248	240	20	100	25	1131	14,92
234 110 90	90	40	368	360	20	120	30	1500	32,76

* Basis of calculations see page 197.

Material: C45. Tooth quality 8d25 DIN 3967.
Pressure angle 20°.

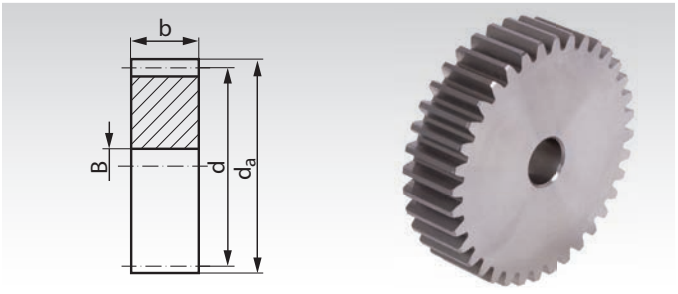

Ordering Details: e.g.: Product No. 244 110 20, Spur Gear, C45, Module 4.0, 20 Teeth

Product No. without Hub	Number of teeth	b mm	d_a mm	d mm	B^{H7} mm	perm. MT* Nm	Weight kg
244 110 20	20	40	88	80	16	61	1,49
244 110 24	24	40	104	96	20	95	2,13
244 110 25	25	40	108	100	20	109	2,32
244 110 30	30	40	128	120	20	185	3,38
244 110 35	35	40	148	140	20	278	4,64
244 110 36	36	40	152	144	25	299	4,86
244 110 38	38	40	160	152	25	344	5,20
244 110 40	40	40	168	160	25	394	6,11
244 110 45	45	40	188	180	25	536	7,78
244 110 48	48	40	200	192	25	638	8,87
244 110 50	50	40	208	200	25	710	9,65
244 110 52	52	40	216	208	25	795	10,45
244 110 55	55	40	228	220	25	913	11,71
244 110 57	57	40	236	228	25	1020	12,59
244 110 60	60	40	248	240	25	1131	13,97
244 110 65	65	40	268	260	25	1220	16,43
244 110 70	70	40	288	280	25	1231	19,09
244 110 75	75	40	308	300	25	1288	21,94
244 110 76	76	40	312	304	30	1303	22,47
244 110 80	80	40	328	320	30	1354	24,93
244 110 85	85	40	348	340	30	1430	28,18
244 110 90	90	40	368	360	30	1500	31,62
244 110 95	95	40	388	380	30	1580	35,26
244 111 00	100	40	408	400	30	1650	39,11
244 111 10	110	40	448	440	30	1744	47,38
244 111 14	114	40	464	456	30	1830	50,91

Gears with hardened teeth Page 241





Reworking within 24h-service possible. Custom made parts on request.

Spur Gears Made from Steel, Module 5.0, Tooth Width b = 40 mm, Milled Teeth, Straight Tooth System

Material: C45. Tooth quality 8d25 DIN 3967.
Pressure angle 20°.

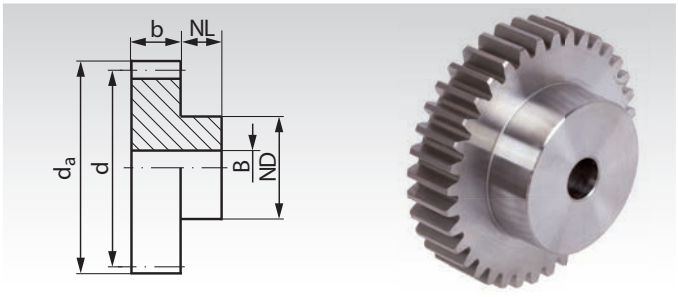

Ordering Details: e.g.: Product No. 235 012 00, Spur Gear, Steel C45, Module 5, 12 Teeth

Product No. with Hub	Number of teeth	b mm	d_a mm	d mm	NL mm	ND mm	B^{H7} mm	perm. MT** Nm	Weight kg
235 012 00	12	40	70	60	25	40	15	49	0,99
235 013 00	13	40	75	65	25	40	15	54	1,14
235 014 00	14	40	80	70	25	50	15	60	1,45
235 015 00	15	40	85	75	25	60	15	66	1,79
235 016 00	16	40	90	80	25	60	15	72	1,98
235 017 00	17	40	95	85	25	60	20	74	2,11
235 018 00	18	40	100	90	25	60	20	84	2,33
235 019 00	19	40	105	95	25	60	20	97	2,55
235 020 00	20	40	110	100	25	60	20	113	2,78
235 021 00	21	40	115	105	25	60	20	132	3,03
235 022 00	22	40	120	110	25	60	20	152	3,30
235 023 00	23	40	125	115	25	60	20	173	3,57
235 024 00	24	40	130	120	25	80	20	195	4,29
235 025 00	25	40	135	125	25	80	20	219	4,59
235 026 00	26	40	140	130	25	80	25	242	4,80
235 027 00	27	40	145	135	25	80	25	267	5,13
235 028 00	28	40	150	140	25	80	25	293	5,47
235 030 00	30	40	160	150	25	80	25	351	6,18
235 032 00	32	40	170	160	30	80	25	416	7,14
235 035 00	35	40	185	175	30	80	25	526	8,36
235 036 00	36	40	190	180	30	100	25	566	9,45
235 038 00	38	40	200	190	30	100	25	656	10,33
235 040 00	40	40	210	200	30	100	25	750	11,30
235 045 00	45	40	235	225	30	100	25	1010	13,87
235 048 00	48	40	250	240	30	100	30	1186	15,44
235 050 00	50	40	260	250	30	120	30	1312	17,50
235 052 00	52	40	270	260	30	120	30	1446	18,75
235 055 00	55	40	285	275	30	150	30	1662	22,00
235 056 00	56	40	290	280	30	150	30	1739	23,00
235 060 00	60	40	310	300	30	160	30	1850	26,50

* Basis of calculations see page 197.

Material: C45. Tooth quality 8d25 DIN 3967.
Pressure angle 20°.

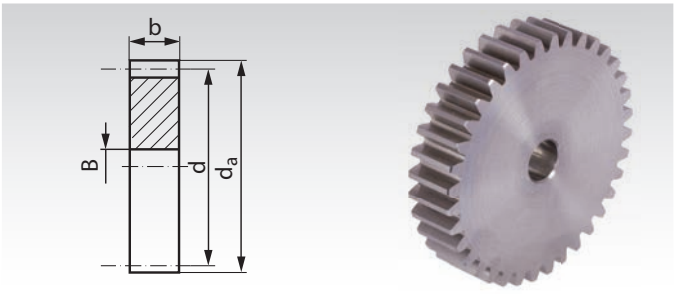

Ordering Details: e.g.: Product No. 245 020 00, Spur Gear, Steel C45, Module 5, 20 Teeth

Product No. without Hub	Number of teeth	b mm	d_a mm	d mm	B^{H7} mm	perm. MT** Nm	Weight kg
245 020 00	20	40	110	100	20	113	2,29
245 025 00	25	40	135	125	25	219	3,61
245 030 00	30	40	160	150	25	351	5,29
245 035 00	35	40	185	175	25	526	7,27
245 036 00	36	40	190	180	25	566	7,71
245 038 00	38	40	200	190	25	656	8,63
245 040 00	40	40	210	200	25	750	9,57
245 045 00	45	40	235	225	25	1010	12,15
245 048 00	48	40	250	240	30	1186	13,02
245 050 00	50	40	260	250	30	1312	13,59
245 052 00	52	40	270	260	30	1446	16,28
245 060 00	60	40	310	300	30	1850	22,00
245 065 00	65	40	335	325	30	1953	25,50
245 070 00	70	40	360	350	30	2086	30,00



Reworking within 24h-service possible. Custom made parts on request.

Spur Gears Made from Steel, Module 5.0, Tooth Width b = 50 mm, Milled Teeth, Straight Tooth System

Material: C45. Tooth quality 8d25 DIN 3967.
Pressure angle 20°.

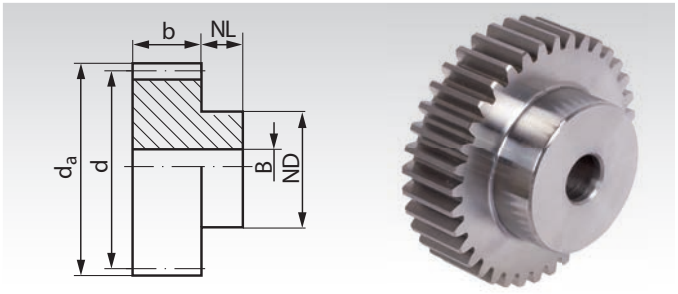

Ordering Details: e.g.: Product No. 235 110 12, Spur Gear, C45, Module 5.0, 12 Teeth

Product No. with Hub	Number of teeth	b mm	d_a mm	d mm	NL mm	ND mm	B^{H7} mm	perm. MT* Nm	Weight kg
235 110 12	12	50	70	60	25	45	20	58	1,21
235 110 13	13	50	75	65	25	50	20	64	1,47
235 110 14	14	50	80	70	25	55	20	71	1,76
235 110 15	15	50	85	75	25	60	20	79	2,07
235 110 16	16	50	90	80	25	65	20	86	2,40
235 110 17	17	50	95	85	25	70	20	88	2,75
235 110 18	18	50	100	90	25	70	20	100	3,02
235 110 19	19	50	105	95	25	70	20	115	3,30
235 110 20	20	50	110	100	25	80	20	134	3,83
235 110 21	21	50	115	105	25	80	20	157	4,15
235 110 22	22	50	120	110	25	80	20	181	4,48
235 110 23	23	50	125	115	25	90	20	206	5,08
235 110 24	24	50	130	120	25	90	20	232	5,44
235 110 25	25	50	135	125	25	90	20	261	5,82
235 110 26	26	50	140	130	25	100	20	288	6,50
235 110 27	27	50	145	135	25	100	20	318	6,91
235 110 28	28	50	150	140	25	100	25	349	7,22
235 110 29	29	50	155	145	25	110	25	385	7,98
235 110 30	30	50	160	150	25	110	25	418	8,44
235 110 32	32	50	170	160	25	110	25	495	9,30
235 110 36	36	50	190	180	25	120	25	674	11,70
235 110 40	40	50	210	200	25	120	25	893	14,00
235 110 50	50	50	260	250	25	120	30	1561	20,67
235 110 60	60	50	310	300	25	160	30	2202	30,69

* Basis of calculations see page 197.

Material: C45. Tooth quality 8d25 DIN 3967.
Pressure angle 20°.

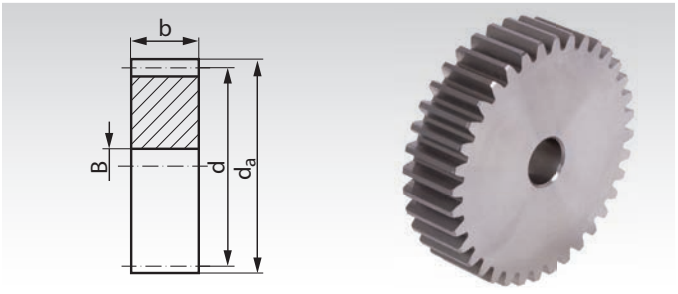

Ordering Details: e.g.: Product No. 245 110 20, Spur Gear, C45, Module 5.0, 20 Teeth

Product No. without Hub	Number of teeth	b mm	d_a mm	d mm	B^{H7} mm	perm. MT* Nm	Weight kg
245 110 20	20	50	110	100	20	134	2,90
245 110 24	24	50	130	120	20	232	4,23
245 110 25	25	50	135	125	20	261	4,60
245 110 30	30	50	160	150	25	418	6,61
245 110 32	32	50	170	160	25	495	7,62
245 110 35	35	50	185	175	25	626	9,16
245 110 38	38	50	200	190	25	781	10,84
245 110 40	40	50	210	200	25	893	12,04
245 110 45	45	50	235	225	25	1202	15,30
245 110 48	48	50	250	240	25	1411	17,44
245 110 50	50	50	260	250	30	1561	18,86
245 110 52	52	50	270	260	30	1721	20,43
245 110 55	55	50	285	275	30	1978	22,89
245 110 57	57	50	295	285	30	2030	24,62
245 110 60	60	50	310	300	30	2202	27,31
245 110 65	65	50	335	325	30	2324	32,12
245 110 70	70	50	360	350	30	2482	37,31
245 110 75	75	50	385	375	30	2576	42,88
245 110 76	76	50	390	380	30	2606	44,04
245 110 80	80	50	410	400	30	2708	48,84
245 110 85	85	50	435	425	30	2860	55,19
245 110 90	90	50	460	450	30	3000	61,92
245 110 95	95	50	485	475	30	3160	69,03
245 111 00	100	50	510	500	30	3300	76,53
245 111 10	110	50	560	550	30	3450	92,69
245 111 14	114	50	580	570	30	3600	99,59

Gears with hardened teeth Page 241





Reworking within 24h-service possible. Custom made parts on request.

Spur Gears Made from Steel, Module 6.0, Tooth Width b = 50 mm, Milled Teeth, Straight Tooth System

Material: C45. Tooth quality 8d25 DIN 3967.
Pressure angle 20°.

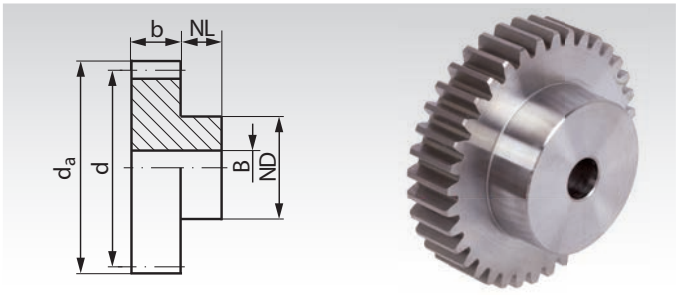

Ordering Details: e.g.: Product No. 236 012 00, Spur Gear, Steel C45, Module 6, 12 Teeth

Product No. with Hub	Number of teeth	b mm	d_a mm	d mm	NL mm	ND mm	B^{H7} mm	perm. MT** Nm	Weight kg
236 012 00	12	50	84	72	25	50	20	96	1,72
236 013 00	13	50	90	78	25	50	20	112	1,99
236 014 00	14	50	96	84	25	60	20	128	2,45
236 015 00	15	50	102	90	25	60	20	140	2,79
236 016 00	16	50	108	96	25	60	20	145	3,12
236 017 00	17	50	114	102	25	60	20	150	3,47
236 018 00	18	50	120	108	25	70	20	175	4,05
236 019 00	19	50	126	114	25	70	20	207	4,46
236 020 00	20	50	132	120	25	70	20	241	4,88
236 021 00	21	50	138	126	25	70	25	276	5,24
236 022 00	22	50	144	132	25	80	25	312	5,94
236 023 00	23	50	150	138	25	80	25	350	6,43
236 024 00	24	50	156	144	25	80	25	391	6,93
236 025 00	25	50	162	150	25	80	25	436	7,49
236 026 00	26	50	168	156	25	80	25	483	8,05
236 027 00	27	50	174	162	25	80	25	533	8,62
236 028 00	28	50	180	168	25	90	25	587	9,78
236 030 00	30	50	192	180	30	100	25	703	11,33
236 032 00	32	50	204	192	30	100	25	836	12,74
236 035 00	35	50	222	210	30	100	25	1045	14,95
236 036 00	36	50	228	216	30	100	25	1120	15,70
236 038 00	38	50	240	228	30	120	25	1280	18,00
236 040 00	40	50	252	240	30	120	30	1460	19,69
236 045 00	45	50	282	270	30	120	30	1955	24,50
236 048 00	48	50	300	288	30	120	30	2300	27,66
236 050 00	50	50	312	300	30	140	30	2550	30,61
236 052 00	52	50	324	312	30	140	30	2800	34,91
236 055 00	55	50	342	330	30	150	40	3060	35,84
236 060 00	60	50	372	360	30	150	40	3350	43,00

* Basis of calculations see page 197.

Material: C45. Tooth quality 8d25 DIN 3967.
Pressure angle 20°.

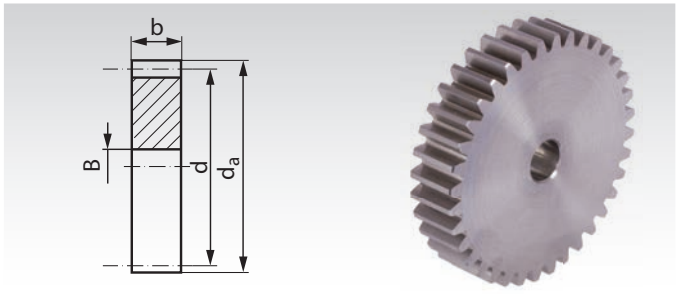

Ordering Details: e.g.: Product No. 246 020 00, Spur Gear, Steel C45 , Module 6, 20 Teeth

Product No. without Hub	Number of teeth	b mm	d_a mm	d mm	B^{H7} mm	perm. MT** Nm	Weight kg
246 020 00	20	50	132	120	20	241	4,23
246 024 00	24	50	156	144	25	391	6,08
246 025 00	25	50	162	150	25	436	6,50
246 030 00	30	50	192	180	25	703	9,50
246 035 00	35	50	222	210	25	1045	13,14
246 036 00	36	50	228	216	25	1120	14,00
246 040 00	40	50	252	240	30	1460	17,50
246 045 00	45	50	282	270	30	1955	22,00
246 048 00	48	50	300	288	30	2300	25,00
246 050 00	50	50	312	300	30	2550	27,00
246 052 00	52	50	324	312	30	2800	29,50
246 056 00	56	50	348	336	40	3120	34,00
246 060 00	60	50	372	360	40	3350	39,00



Reworking within 24h-service possible. Custom made parts on request.

Spur Gears Made from Steel, Module 6.0, Tooth Width b = 60 mm, Milled Teeth, Straight Tooth System

Material: C45. Tooth quality 8d25 DIN 3967.
Pressure angle 20°.

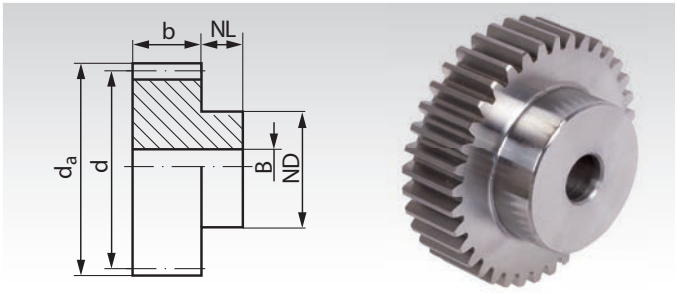

Ordering Details: e.g.: Product No. 236 110 12, Spur Gear, C45, Module 6.0, 12 Teeth

Product No. with Hub	Number of teeth	b mm	d_a mm	d mm	NL mm	ND mm	B^{H7} mm	perm. MT* Nm	Weight kg
236 110 12	12	60	84	72	20	54	20	110	1,82
236 110 13	13	60	90	78	20	60	20	129	2,20
236 110 14	14	60	96	84	20	65	20	147	2,88
236 110 15	15	60	102	90	20	70	20	161	3,01
236 110 16	16	60	108	95	20	75	20	167	3,46
236 110 17	17	60	114	102	20	75	20	172	4,26
236 110 18	18	60	120	108	20	80	20	201	4,33
236 110 20	20	60	132	120	20	90	20	277	5,43
236 110 21	21	60	138	126	20	90	25	317	6,44
236 110 22	22	60	144	132	20	100	25	358	7,23
236 110 24	24	60	156	144	20	110	25	450	7,88
236 110 25	25	60	162	150	20	110	25	500	8,42
236 110 30	30	60	192	180	20	120	25	808	13,20
236 110 36	36	60	228	216	20	130	25	1284	18,68
236 110 50	50	60	312	300	20	140	30	2924	34,59
236 110 60	60	60	372	360	20	150	40	3842	48,97

Material: C45. Tooth quality 8d25 DIN 3967.
Pressure angle 20°.

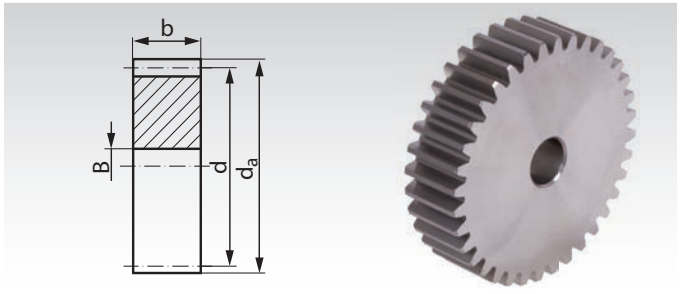

Ordering Details: e.g.: Product No. 246 110 20, Spur Gear, C45, Module 6.0, 20 Teeth

Product No. without Hub	Number of teeth	b mm	d_a mm	d mm	B^{H7} mm	perm. MT* Nm	Weight kg
246 110 20	20	60	132	120	20	277	5,08
246 110 24	24	60	156	144	25	450	7,29
246 110 25	25	60	162	150	25	500	7,93
246 110 28	28	60	180	168	25	675	10,00
246 110 30	30	60	192	180	25	808	11,52
246 110 32	32	60	204	192	25	960	13,14
246 110 35	35	60	222	210	25	1200	15,77
246 110 36	36	60	228	216	25	1284	16,69
246 110 38	38	60	240	228	25	1470	18,63
246 110 40	40	60	252	240	25	1680	20,66
246 110 50	50	60	312	300	30	2924	32,31
246 110 60	60	60	372	360	40	3842	46,42

* Basis of calculations see page 197.

Spur Gears Made from Steel, Module 8, with One-Sided Hub, Milled Teeth, Straight Tooth System

Material: C45.
Tooth quality 8d25 DIN 3967.
Pressure angle 20°.

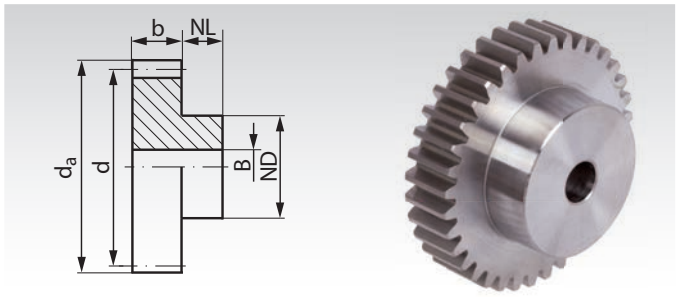

Ordering Details: e.g.: Product No. 238 012 00, Spur Gear, C45, Module 8, 12 Teeth

Module 8.0 Tooth Width b = 65 mm

Product No. with Hub	Number of teeth	b mm	d_a mm	d mm	NL mm	ND mm	B^{H7} mm	perm.MT* Nm	Weight kg
238 012 00	12	65	112	96	30	70	25	240	4,20
238 015 00	15	65	136	120	30	80	25	370	6,50
238 018 00	18	65	160	144	30	80	25	495	9,00
238 020 00	20	65	176	160	30	100	30	655	11,50
238 024 00	24	65	208	192	30	120	30	1045	16,90
238 025 00	25	65	216	200	30	120	30	1160	18,10
238 030 00	30	65	256	240	30	150	30	1834	26,60
238 036 00	36	65	304	288	30	160	40	2900	36,90
238 040 00	40	65	336	320	30	180	40	3790	46,00

* Basis of calculations see page 197.



Reworking within 24h-service possible. Custom made parts on request.

Spur Gears with One-Sided Hub, Milled Teeth, Straight Tooth System, Teeth Induction Hardened

Material: C45. Teeth milled in quality 8d25 DIN 3967.
After milling, the tooth area is induction hardened, 54 + 4 HRC.
The hardening sets the tooth quality to 10-11.

Pressure angle 20°.

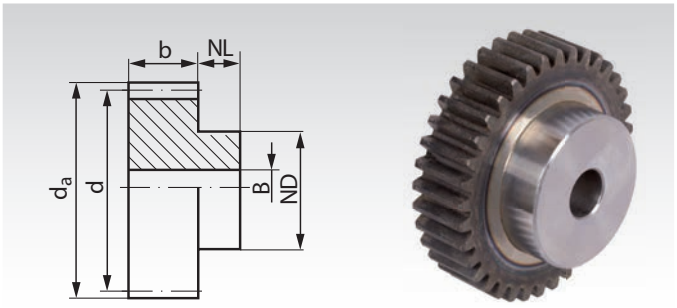

Ordering Details: e.g.: Product No. 214 881 12, Spur Gear, Hardened, Module 1, 12 Teeth

Module 1 Tooth Width b = 15 mm

Product No.	Number of teeth	b mm	d_a mm	d mm	NL mm	ND mm	B^{H7} mm	perm. MT* Nm	Weight g
214 881 12	12	15	14	12	10	9	6	1,2	13
214 881 13	13	15	15	13	10	10	6	1,3	16
214 881 14	14	15	16	14	10	11	6	1,5	20
214 881 15	15	15	17	15	10	12	6	1,6	24
214 881 16	16	15	18	16	10	13	6	1,6	28
214 881 17	17	15	19	17	10	14	6	1,7	33
214 881 18	18	15	20	18	10	15	8	2,0	33
214 881 20	20	15	22	20	10	16	8	2,7	42
214 881 24	24	15	26	24	10	20	10	4,1	61
214 881 25	25	15	27	25	10	20	10	4,5	66
214 881 26	26	15	28	26	10	20	10	5,0	70
214 881 28	28	15	30	28	10	20	10	5,8	80
214 881 30	30	15	32	30	10	20	10	6,9	90
214 881 32	32	15	34	32	10	25	10	8,0	120
214 881 36	36	15	38	36	10	25	10	10,5	140
214 881 40	40	15	42	40	10	25	10	13,5	170
214 881 50	50	15	52	50	10	30	12	23,9	260
214 881 60	60	15	62	60	10	40	12	37,8	400

Module 1.5 Tooth Width b = 17 mm

Product No.	Number of teeth	b mm	d_a mm	d mm	NL mm	ND mm	B^{H7} mm	perm. MT* Nm	Weight g
218 881 12	12	17	21	18	13	14	8	3,8	40
218 881 15	15	17	25,5	22,5	13	18	8	5,2	70
218 881 16	16	17	27	24	13	19	8	5,6	80
218 881 18	18	17	30	27	13	20	8	6,6	100
218 881 20	20	17	33	30	13	25	8	8,6	130
218 881 22	22	17	36	33	13	25	10	10,7	140
218 881 24	24	17	39	36	13	25	10	13,3	170
218 881 25	25	17	40,5	37,5	13	25	10	14,5	180
218 881 30	30	17	48	45	13	30	12	22,2	260
218 881 36	36	17	57	54	13	35	12	34	370
218 881 40	40	17	63	60	13	40	12	44	480
218 881 50	50	17	78	75	13	50	14	77	760
218 881 60	60	17	93	90	13	60	16	122	1090

Module 2 Tooth Width b = 20 mm

Product No.	Number of teeth	b mm	d_a mm	d mm	NL mm	ND mm	B^{H7} mm	perm. MT* Nm	Weight g
231 881 12	12	20	28	24	15	18	10	9,0	80
231 881 13	13	20	30	26	15	20	10	10,6	100
231 881 14	14	20	32	28	15	22	10	11,9	120
231 881 15	15	20	34	30	15	24	10	12,9	140
231 881 16	16	20	36	32	15	25	10	13,5	160
231 881 18	18	20	40	36	15	25	10	16,2	190
231 881 20	20	20	44	40	15	30	10	21,1	260
231 881 22	22	20	48	44	15	30	12	26,4	290
231 881 24	24	20	52	48	15	35	12	32,7	360
231 881 25	25	20	54	50	15	35	12	35,6	390
231 881 30	30	20	64	60	15	40	14	55	550
231 881 32	32	20	68	64	15	45	14	64	650
231 881 36	36	20	76	72	15	45	14	84	780
231 881 40	40	20	84	80	15	50	14	107	970
231 881 50	50	20	104	100	15	70	16	190	1620
231 881 60	60	20	124	120	15	70	16	321	2160



Reworking within 24h-service possible. Custom made parts on request.

* Basis of calculations see page 197.

Spur Gears with One-Sided Hub, Milled Teeth, Straight Tooth System, Teeth Induction Hardened

Material: C45. Teeth milled in quality 8d25 DIN 3967.
After milling, the tooth area is induction hardened, 54 + 4 HRC.
The hardening sets the tooth quality to 10-11.

Pressure angle 20°.

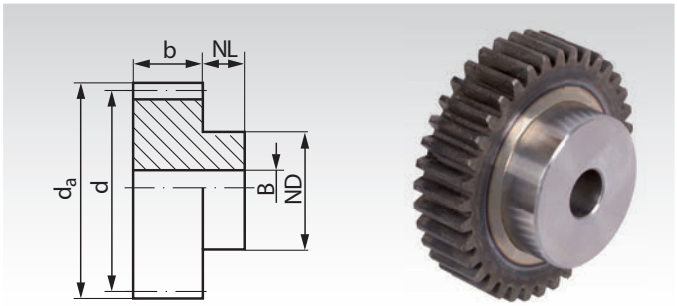

Ordering Details: e.g.: Product No. 232 881 12, Spur Gear, Hardened, Module 2.5, 12 Teeth

Module 2.5 Tooth Width b = 25 mm

Product No.	Number of teeth	b mm	d_a mm	d mm	NL mm	ND mm	B^{H7} mm	perm. MT* Nm	Weight kg
232 881 12	12	25	35	30	20	22	10	19,5	0,17
232 881 15	15	25	42,5	37,5	20	30	10	27,4	0,30
232 881 18	18	25	50	45	20	35	12	34,3	0,42
232 881 20	20	25	55	50	20	40	12	44,2	0,54
232 881 24	24	25	65	60	20	45	14	69	0,74
232 881 25	25	25	67,5	62,5	20	50	14	75	0,85
232 881 30	30	25	80	75	20	55	14	115	1,18
232 881 36	36	25	95	90	20	60	16	176	1,61
232 881 40	40	25	105	100	20	70	16	235	2,06
232 881 50	50	25	130	125	20	80	20	446	3,07
232 881 60	60	25	155	150	20	100	20	716	4,57

Module 3 Tooth Width b = 30 mm

Product No.	Number of teeth	b mm	d_a mm	d mm	NL mm	ND mm	B^{H7} mm	perm. MT* Nm	Weight kg
233 881 12	12	30	42	36	20	27	12	35	0,28
233 881 15	15	30	51	45	20	35	12	49	0,47
233 881 18	18	30	60	54	20	45	14	63	0,72
233 881 20	20	30	66	60	20	45	14	81	0,84
233 881 24	24	30	78	72	20	50	16	124	1,18
233 881 25	25	30	81	75	20	60	16	137	1,39
233 881 30	30	30	96	90	20	60	16	210	1,85
233 881 36	36	30	114	108	20	70	20	350	2,62
233 881 40	40	30	126	120	20	80	20	472	3,31
233 881 50	50	30	156	150	20	100	20	851	5,18
233 881 60	60	30	186	180	20	100	20	1442	6,97

Module 4 Tooth Width b = 40 mm

Product No.	Number of teeth	b mm	d_a mm	d mm	NL mm	ND mm	B^{H7} mm	perm. MT* Nm	Weight kg
234 881 12	12	40	56	48	20	35	14	86	0,63
234 881 15	15	40	68	60	20	45	14	125	1,05
234 881 18	18	40	80	72	20	50	16	158	1,47
234 881 20	20	40	88	80	20	60	16	201	1,90
234 881 24	24	40	104	96	20	75	20	314	2,79
234 881 25	25	40	108	100	20	75	20	360	2,98
234 881 30	30	40	128	120	20	75	20	611	4,06
234 881 36	36	40	152	144	20	80	25	987	5,63
234 881 40	40	40	168	160	20	80	25	1300	6,74
234 881 50	50	40	208	200	20	100	25	2343	10,66
234 881 60	60	40	248	240	20	100	25	3732	14,92

Module 5 Tooth Width b = 50 mm

Product No.	Number of teeth	b mm	d_a mm	d mm	NL mm	ND mm	B^{H7} mm	perm. MT* Nm	Weight kg
235 881 12	12	50	70	60	25	45	20	191	1,21
235 881 15	15	50	85	75	25	60	20	261	2,07
235 881 18	18	50	100	90	25	70	20	330	3,02
235 881 20	20	50	110	100	25	80	20	442	3,83
235 881 24	24	50	130	120	25	90	20	766	5,44
235 881 25	25	50	135	125	25	90	20	861	5,82
235 881 30	30	50	160	150	25	110	25	1380	8,44

* Basis of calculations see page 197.



Reworking within 24h-service possible. Custom made parts on request.

Precision Spur Gears Made From Steel 16MnCr5, Hardened with Ground Tooth Flanks

Tooth quality 7e25.
Pressure angle 20°.
Case hardened HRC 58± 2.
Feather keyways in accordance with DIN 6885/1, Tol. P9.
Teeth, bores and faces ground.

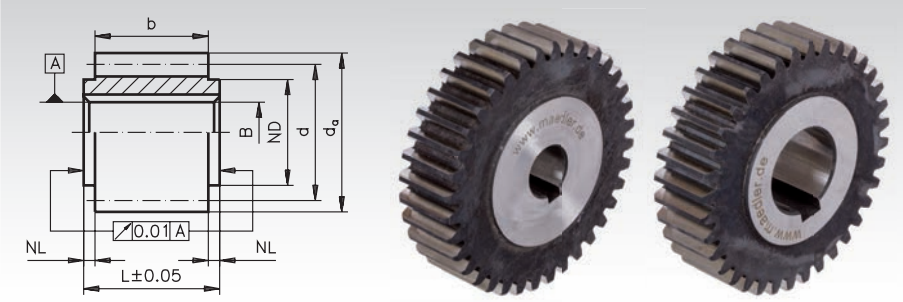

Ordering Details: e.g.: Product No. 224 818 00, spur gear, steel 16MnCr5 module 1.0, 18 teeth, ground

Module 1.0 tooth width b = 10 mm, various bore sizes

Product No.	Number of teeth	b mm	$d_a^{-0,1}$ mm	d mm	NL mm	ND mm	L± 0,05 mm	B^{H6} mm	perm. MT* Nm	Weight g
224 818 00	18	10	20	18	1,5/1,5	15	13	8	5,7	19
224 820 00	20	10	22	20	1,5/1,5	15	13	8	7,5	23
224 824 00	24	10	26	24	1,5/1,5	18	13	10	12,2	33
224 824 12	24	10	26	24	1,5/1,5	18	13	12	12,2	30
224 825 00	25	10	27	25	1,5/1,5	20	13	10	13,5	41
224 825 12	25	10	27	25	1,5/1,5	20	13	12	13,5	38
224 830 00	30	10	32	30	1,5/1,5	25	13	10	16,1	58
224 830 12	30	10	32	30	1,5/1,5	25	13	12	16,1	54
224 836 00	36	10	38	36	1,5/1,5	25	13	10	19,3	82
224 836 15	36	10	38	36	1,5/1,5	25	13	15	19,3	72
224 840 00	40	10	42	40	1,5/1,5	30	13	12	21,4	102
224 840 15	40	10	42	40	1,5/1,5	30	13	15	21,4	95
224 848 00	48	10	50	48	1,5/1,5	40	13	12	25,7	158
224 848 15	48	10	50	48	1,5/1,5	40	13	15	25,7	151
224 850 00	50	10	52	50	1,5/1,5	40	13	12	26,8	170
224 850 20	50	10	52	50	1,5/1,5	40	13	20	26,8	149
224 860 00	60	10	62	60	1,5/1,5	50	13	12	32,6	253
224 860 20	60	10	62	60	1,5/1,5	50	13	20	32,6	232

* Basis of calculations see page 197.

Module 1.5 tooth width b = 15 mm, various bore sizes

Product No.	Number of teeth	b mm	$d_a^{-0,1}$ mm	d mm	NL mm	ND mm	L± 0,05 mm	B^{H6} mm	perm. MT* Nm	Weight g
228 812 00	12	15	21	18	1,5/1,5	14	18	8	12,5	25
228 815 00	15	15	25,5	22,5	1,5/1,5	18	18	10	18,1	40
228 815 12	15	15	25,5	22,5	1,5/1,5	18	18	12	18,1	36
228 818 00	18	15	30	27	1,5/1,5	22	18	10	23,0	63
228 818 12	18	15	30	27	1,5/1,5	22	18	12	23,0	58
228 820 00	20	15	33	30	1,5/1,5	25	18	10	30,3	82
228 820 15	20	15	33	30	1,5/1,5	25	18	15	30,3	63
228 824 00	24	15	39	36	1,5/1,5	25	18	10	45,5	115
228 824 15	24	15	39	36	1,5/1,5	25	18	15	45,5	104
228 825 00	25	15	40,5	37,5	1,5/1,5	28	18	12	50,3	126
228 825 15	25	15	40,5	37,5	1,5/1,5	28	18	15	50,3	117
228 830 00	30	15	48	45	1,5/1,5	30	18	12	60,2	185
228 830 15	30	15	48	45	1,5/1,5	30	18	15	60,2	176
228 836 00	36	15	57	54	1,5/1,5	40	18	12	72,0	277
228 836 20	36	15	57	54	1,5/1,5	40	18	20	72,0	251
228 840 00	40	15	63	60	1,5/1,5	40	18	12	80,0	345
228 840 20	40	15	63	60	1,5/1,5	40	18	20	80,0	313
228 848 00	48	15	75	72	1,5/1,5	40	18	15	96,8	474
228 848 20	48	15	75	72	1,5/1,5	40	18	20	96,8	458
228 850 00	50	15	78	75	1,5/1,5	50	18	15	101,0	545
228 850 25	50	15	78	75	1,5/1,5	50	18	25	101,0	490
228 860 00	60	15	93	90	1,5/1,5	60	18	15	122,0	777
228 860 25	60	15	93	90	1,5/1,5	60	18	25	122,0	736

* Basis of calculations see page 197.

Precision Gear Racks
Page 260

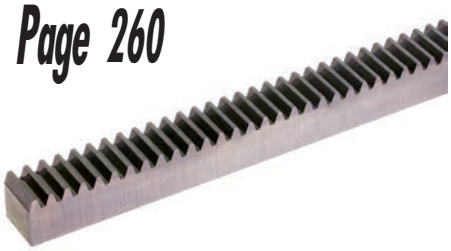

Precision Spur Gears Made From Steel 16MnCr5, Hardened with Ground Tooth Flanks

Tooth quality 7e25.
Pressure angle 20°.
Case hardened HRC 58±2.
Feather keyways in accordance with DIN 6885/1, Tol. P9.
Teeth, bores and faces ground.

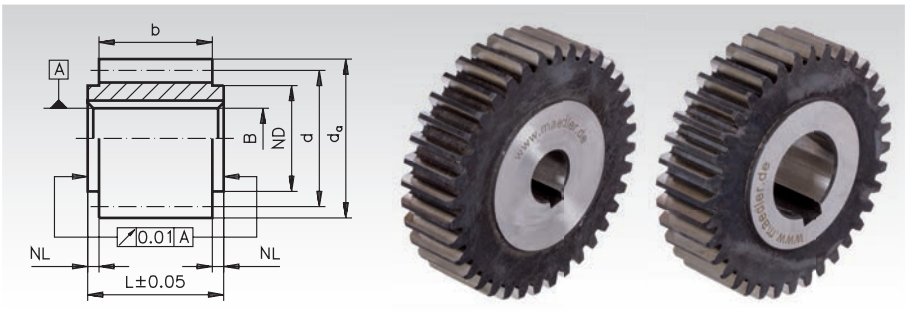

Ordering Details: e.g.: Product No. 241 812 00, spur gear, steel 16MnCr5 module 2, 12 teeth, ground

Module 2.0 tooth width b = 20 mm, various bore sizes

Product No.	Number of teeth	b mm	$d_a^{-0,1}$ mm	d mm	NL mm	ND mm	L± 0,05 mm	B^{H6} mm	perm. MT* Nm	Weight g
241 812 00	12	20	28	24	1,5/1,5	18	23	10	30,5	61
241 815 00	15	20	34	30	1,5/1,5	25	23	12	44,4	100
241 815 15	15	20	34	30	1,5/1,5	25	23	15	44,4	88
241 818 00	18	20	40	36	1,5/1,5	28	23	12	56,4	150
241 818 15	18	20	40	36	1,5/1,5	28	23	15	56,4	139
241 820 00	20	20	44	40	1,5/1,5	30	23	12	74,2	190
241 820 15	20	20	44	40	1,5/1,5	30	23	15	74,2	179
241 824 00	24	20	52	48	1,5/1,5	30	23	12	113,3	271
241 824 15	24	20	52	48	1,5/1,5	30	23	15	113,3	265
241 824 20	24	20	52	48	1,5/1,5	30	23	20	113,3	240
241 825 00	25	20	54	50	1,5/1,5	35	23	15	125,2	294
241 825 20	25	20	54	50	1,5/1,5	35	23	20	125,2	269
241 830 00	30	20	64	60	1,5/1,5	40	23	15	151,0	430
241 830 20	30	20	64	60	1,5/1,5	40	23	20	151,0	411
241 830 25	30	20	64	60	1,5/1,5	40	23	25	151,0	379
241 836 00	36	20	76	72	1,5/1,5	45	23	15	188,3	629
241 836 20	36	20	76	72	1,5/1,5	45	23	20	188,3	612
241 836 25	36	20	76	72	1,5/1,5	45	23	25	188,3	580
241 840 00	40	20	84	80	1,5/1,5	50	23	15	213,3	793
241 840 20	40	20	84	80	1,5/1,5	50	23	20	213,3	769
241 840 25	40	20	84	80	1,5/1,5	50	23	25	213,3	737
241 848 00	48	20	100	96	1,5/1,5	50	23	15	261,2	1137
241 848 20	48	20	100	96	1,5/1,5	50	23	20	261,2	1122
241 848 25	48	20	100	96	1,5/1,5	50	23	25	261,2	1080
241 850 00	50	20	104	100	1,5/1,5	60	23	20	273,7	1225
241 850 25	50	20	104	100	1,5/1,5	60	23	25	273,7	1196
241 850 30	50	20	104	100	1,5/1,5	60	23	30	273,7	1157
241 860 00	60	20	124	120	1,5/1,5	70	23	20	337,0	1788
241 860 30	60	20	124	120	1,5/1,5	70	23	30	337,0	1717
241 860 35	60	20	124	120	1,5/1,5	70	23	35	337,0	1671

* Basis of calculations see page 197.

Module 3.0 tooth width b = 25 mm, various bore sizes

Product No.	Number of teeth	b mm	$d_a^{-0,1}$ mm	d mm	NL mm	ND mm	L± 0,05 mm	B^{H6} mm	perm. MT* Nm	Weight g
243 812 00	12	25	42	36	1,5/1,5	25	28	12	90	183
243 812 15	12	25	42	36	1,5/1,5	25	28	15	90	169
243 815 00	15	25	51	45	1,5/1,5	35	28	12	130	305
243 815 20	15	25	51	45	1,5/1,5	35	28	20	130	261
243 818 00	18	25	60	54	1,5/1,5	40	28	15	167	434
243 818 20	18	25	60	54	1,5/1,5	40	28	20	167	402
243 820 00	20	25	66	60	1,5/1,5	45	28	15	220	550
243 820 25	20	25	66	60	1,5/1,5	45	28	25	220	477
243 824 00	24	25	78	72	1,5/1,5	50	28	15	336	780
243 824 25	24	25	78	72	1,5/1,5	50	28	25	336	727
243 824 35	24	25	78	72	1,5/1,5	50	28	35	336	624
243 825 00	25	25	81	75	1,5/1,5	50	28	25	371	792
243 825 35	25	25	81	75	1,5/1,5	50	28	35	371	688
243 830 00	30	25	96	90	1,5/1,5	50	28	20	463	1220
243 830 25	30	25	96	90	1,5/1,5	50	28	25	463	1171
243 830 35	30	25	96	90	1,5/1,5	50	28	35	463	1068
243 836 00	36	25	114	108	1,5/1,5	60	28	20	575	1762
243 836 30	36	25	114	108	1,5/1,5	60	28	30	575	1688
243 836 35	36	25	114	108	1,5/1,5	60	28	35	575	1632
243 840 00	40	25	126	120	1,5/1,5	70	28	20	650	2250
243 840 35	40	25	126	120	1,5/1,5	70	28	35	650	2073
243 840 40	40	25	126	120	1,5/1,5	70	28	40	650	2008
243 848 00	48	25	150	144	1,5/1,5	80	28	20	795	3208
243 848 35	48	25	150	144	1,5/1,5	80	28	35	795	3066
243 848 45	48	25	150	144	1,5/1,5	80	28	45	795	2928
243 850 00	50	25	156	150	1,5/1,5	80	28	20	830	3500
243 850 35	50	25	156	150	1,5/1,5	80	28	35	830	3355
243 850 45	50	25	156	150	1,5/1,5	80	28	45	830	3197
243 860 00	60	25	186	180	1,5/1,5	90	28	25	1060	4972
243 860 35	60	25	186	180	1,5/1,5	90	28	35	1060	4875
243 860 45	60	25	186	180	1,5/1,5	90	28	45	1060	4737

* Basis of calculations see page 197.

Spur Gears Made from Stainless Steel with One-Sided Hub, Milled Teeth, Straight Tooth System

Material: Stainless steel 1.4305.

Tooth quality 8d25 DIN 3967.
Pressure angle 20°.

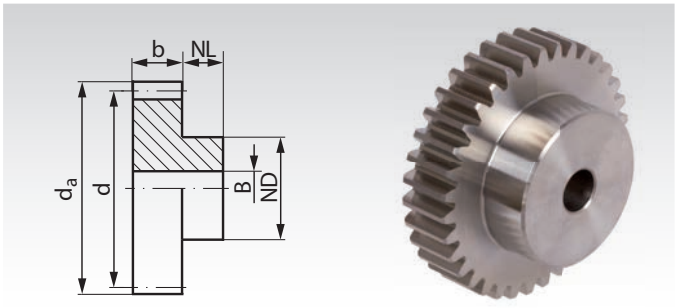

Ordering Details: e.g.: Product No. 214 990 10, Spur Gear, Stainless Steel, Module 1, 10 Teeth

Module 1 Tooth Width b = 10 mm

Product No.	Number of teeth	b mm	d_a mm	d mm	NL mm	ND mm	B^{H7} mm	perm. MT* Nm	Weight g
214 990 10	10	10	12	10	6	8	4	0,11	7
214 990 11	11	10	13	11	6	8	4	0,14	8
214 990 12	12	10	14	12	6	10	4	0,15	10
214 990 13	13	10	15	13	6	10	5	0,18	11
214 990 14	14	10	16	14	6	10	5	0,19	14
214 990 15	15	10	17	15	6	12	5	0,21	16
214 990 16	16	10	18	16	6	12	5	0,22	18
214 990 17	17	10	19	17	6	12	6	0,23	19
214 990 18	18	10	20	18	6	15	6	0,26	24
214 990 19	19	10	21	19	6	15	6	0,30	26
214 990 20	20	10	22	20	6	15	6	0,33	28
214 990 22	22	10	24	22	6	15	6	0,42	33
214 990 24	24	10	26	24	6	15	6	0,51	39
214 990 25	25	10	27	25	6	20	8	0,56	46
214 990 26	26	10	28	26	6	20	8	0,61	49
214 990 28	28	10	30	28	6	20	8	0,72	55
214 990 30	30	10	32	30	8	25	8	0,84	77
214 990 36	36	10	38	36	8	25	8	1,27	102
214 990 40	40	10	42	40	8	25	8	1,62	120
214 990 45	45	10	47	45	10	30	10	2,11	165
214 990 48	48	10	50	48	10	30	10	2,44	182
214 990 50	50	10	52	50	10	30	10	2,68	193
214 990 54	54	10	56	54	10	40	10	3,19	262
214 990 60	60	10	62	60	12	40	10	4,05	320
214 990 64	64	10	66	64	12	40	10	4,69	352
214 990 65	65	10	67	65	12	40	10	4,86	360
214 990 70	70	10	72	70	12	40	10	5,76	401
214 990 72	72	10	74	72	12	50	10	6,14	484
214 990 75	75	10	77	75	12	50	10	6,74	510
214 990 80	80	10	82	80	12	50	10	7,82	560
214 991 00	100	10	102	100	12	60	12	13,1	856
214 991 20	120	10	122	120	12	60	12	21,5	1125

Module 1.5 Tooth Width b = 15 mm

Product No.	Number of teeth	b mm	d_a mm	d mm	NL mm	ND mm	B^{H7} mm	perm. MT* Nm	Weight g
218 990 11	11	15	19,5	16,5	10	12	6	0,47	28
218 990 12	12	15	21	18	10	15	8	0,55	32
218 990 14	14	15	24	21	10	15	8	0,69	42
218 990 15	15	15	25,5	22,5	10	18	10	0,76	49
218 990 16	16	15	27	24	10	20	10	0,83	60
218 990 17	17	15	28,5	25,5	10	20	10	0,89	66
218 990 18	18	15	30	27	10	22	10	0,96	79
218 990 20	20	15	33	30	10	25	10	1,23	103
218 990 22	22	15	36	33	15	25	10	1,53	136
218 990 24	24	15	39	36	15	25	10	1,88	154
218 990 25	25	15	40,5	37,5	15	25	10	2,07	166
218 990 28	28	15	45	42	15	25	10	2,69	198
218 990 30	30	15	48	45	15	30	10	3,14	246
218 990 35	35	15	55,5	52,5	15	30	10	4,47	317
218 990 40	40	15	63	60	15	40	10	6,06	454
218 990 45	45	15	70,5	67,5	15	40	10	7,93	541
218 990 48	48	15	75	72	15	40	10	9,20	599
218 990 50	50	15	78	75	15	50	10	10,1	721
218 990 55	55	15	85,5	82,5	15	50	10	12,6	831
218 990 60	60	15	93	90	15	60	12	15,4	1041
218 990 65	65	15	100,5	97,5	15	60	12	18,5	1172
218 990 70	70	15	108	105	20	60	12	21,9	1423
218 990 80	80	15	123	120	20	70	15	29,9	1878

* Basis of calculations see page 197.



Reworking within 24h-service possible. Custom made parts on request.

Spur Gears Made from Stainless Steel with One-Sided Hub, Milled Teeth, Straight Tooth System

Material: Stainless steel 1.4305.

Tooth quality 8d25 DIN 3967.
Pressure angle 20°.

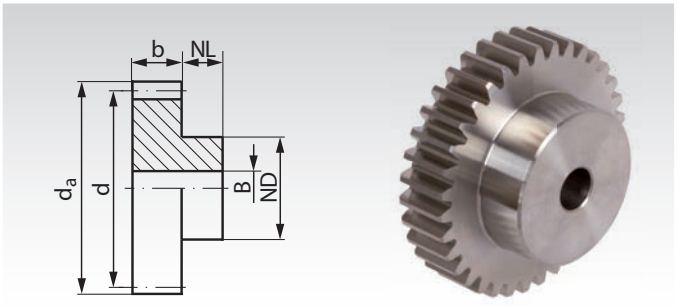

Ordering Details: e.g.: Product No. 231 990 10, Spur Gear, Stainless Steel, Module 2, 10 Teeth

Module 2 Tooth Width b = 16 mm

Product No.	Number of teeth	b mm	d_a mm	d mm	NL mm	ND mm	B^{H7} mm	perm. MT* Nm	Weight g
231 990 10	10	16	24	20	15	15	8	0,8	45
231 990 11	11	16	26	22	15	18	10	0,9	55
231 990 12	12	16	28	24	15	20	10	1,1	70
231 990 14	14	16	32	28	15	25	10	1,4	110
231 990 15	15	16	34	30	15	25	12	1,5	114
231 990 16	16	16	36	32	15	25	12	1,6	126
231 990 18	18	16	40	36	15	30	12	1,9	179
231 990 20	20	16	44	40	15	30	12	2,5	207
231 990 22	22	16	48	44	15	30	12	3,0	240
231 990 24	24	16	52	48	15	30	12	3,8	275
231 990 25	25	16	54	50	15	30	12	4,2	295
231 990 28	28	16	60	56	15	35	12	5,5	389
231 990 30	30	16	64	60	15	40	12	6,4	466
231 990 35	35	16	74	70	15	45	12	9,2	632
231 990 40	40	16	84	80	15	50	12	12,5	825
231 990 45	45	16	94	90	15	50	12	16,4	911
231 990 48	48	16	100	96	15	50	12	19,0	1098
231 990 50	50	16	104	100	15	50	12	20,9	1174
231 990 55	55	16	114	110	15	60	12	26,0	1485
231 990 60	60	16	124	120	15	70	12	31,9	1827
231 990 80	80	16	164	160	20	80	20	57,4	3196

Module 2.5 Tooth Width b = 20 mm

Product No.	Number of teeth	b mm	d_a mm	d mm	NL mm	ND mm	B^{H7} mm	perm. MT* Nm	Weight g
232 990 12	12	20	35	30	15	20	12	2,3	110
232 990 14	14	20	40	35	15	20	12	2,9	140
232 990 15	15	20	42,5	37,5	15	25	12	3,2	190
232 990 16	16	20	45	40	15	25	12	3,4	210
232 990 18	18	20	50	45	15	30	12	4,0	290
232 990 20	20	20	55	50	15	30	12	5,2	340
232 990 24	24	20	65	60	15	40	12	7,9	540
232 990 25	25	20	67,5	62,5	15	40	12	8,7	580
232 990 28	28	20	75	70	15	40	12	11,4	700
232 990 30	30	20	80	75	15	40	12	13,4	790
232 990 32	32	20	85	80	15	50	15	15,5	950
232 990 35	35	20	92,5	87,5	15	50	15	19,1	1100
232 990 40	40	20	105	100	20	60	15	26,0	1600
232 990 45	45	20	117,5	112,5	20	60	15	34,3	1920
232 990 48	48	20	125	120	20	60	15	39,8	2140
232 990 50	50	20	130	125	20	70	15	43,8	2430
232 990 55	55	20	142,5	137,5	20	70	20	55,2	2780
232 990 60	60	20	155	150	20	70	20	72,0	3240



Reworking within 24h-service possible. Custom made parts on request.

* Basis of calculations see page 197.

Spur Gears Made from Stainless Steel with One-Sided Hub, Milled Teeth, Straight Tooth System

Material: Stainless steel 1.4305.

Tooth quality 8d25 DIN 3967.
Pressure angle 20°.

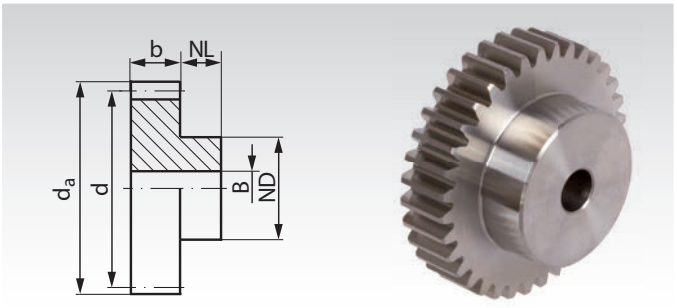

Ordering Details: e.g.: Product No. 233 990 12, Spur Gear, Stainless Steel, Module 3, 12 Teeth

Module 3 Tooth Width b = 25 mm

Product No.	Number of teeth	b mm	d_a mm	d mm	NL mm	ND mm	B^{H7} mm	perm. MT* Nm	Weight g
233 990 12	12	25	42	36	15	25	12	4,3	210
233 990 14	14	25	48	42	15	25	12	5,4	280
233 990 15	15	25	51	45	15	35	12	6,0	378
233 990 16	16	25	54	48	15	35	12	6,5	410
233 990 18	18	25	60	54	15	45	12	7,6	586
233 990 20	20	25	66	60	15	45	15	9,8	670
233 990 22	22	25	72	66	15	45	15	12,2	780
233 990 24	24	25	78	72	15	50	15	15,0	957
233 990 25	25	25	81	75	15	50	15	16,6	1019
233 990 26	26	25	84	78	15	50	15	18,2	1080
233 990 28	28	25	90	84	15	50	20	21,6	1190
233 990 30	30	25	96	90	15	50	20	25,4	1355
233 990 35	35	25	111	105	15	60	20	33,9	1904
233 990 36	36	25	114	108	15	60	20	36,8	2000
233 990 40	40	25	126	120	20	70	20	49,7	2670
233 990 45	45	25	141	135	20	70	20	65,5	3263
233 990 48	48	25	150	144	20	80	20	77,6	3841
233 990 50	50	25	156	150	20	80	20	88,0	4101
233 990 60	60	25	186	180	20	90	20	149,2	5830

Module 4 Tooth Width b = 30 mm

Product No.	Number of teeth	b mm	d_a mm	d mm	NL mm	ND mm	B^{H7} mm	perm. MT* Nm	Weight g
234 990 12	12	30	56	48	20	35	15	9,8	480
234 990 14	14	30	64	56	20	40	15	12,4	680
234 990 15	15	30	68	60	20	40	15	13,8	760
234 990 16	16	30	72	64	20	40	20	14,7	800
234 990 18	18	30	80	72	20	50	20	17,5	1110
234 990 20	20	30	88	80	20	50	20	22,6	1330
234 990 24	24	30	104	96	20	60	20	35,0	1980
234 990 25	25	30	108	100	20	60	20	40,0	2120
234 990 28	28	30	120	112	20	60	20	49,0	2580
234 990 30	30	30	128	120	20	70	20	60,0	3080
234 990 35	35	30	148	140	20	70	25	85,0	3970
234 990 40	40	30	168	160	20	80	25	125,0	5270
234 990 45	45	30	188	180	20	80	25	176,0	6520
234 990 48	48	30	200	192	20	100	25	214,0	7780
234 990 50	50	30	208	200	20	100	25	240,0	8360
234 990 60	60	30	248	240	20	100	25	382,0	11500

* Basis of calculations see page 197.

Gears Stainless Module 1.59 and 3.18 Page 248
Gear Racks stainless Page 261
Round Gear Racks stainless Page 263



Reworking within 24h-service possible. Custom made parts on request.

Spur Gear Shafts Made From Steel with One-Sided Hub, Milled, Straight Teeth

Material: C45.
Pressure angle 20°.

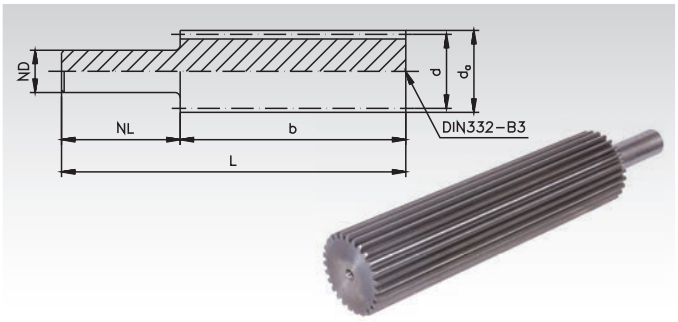

Ordering Details: e.g.: Product No. 214 511 00, spur gear, module 1, 11 teeth

Module 1.0

Product No.	Number of teeth	d mm	d_a mm	ND mm	NL mm	b mm	L mm	Weight kg
214 511 00	11	11	13	12	50	150	200	0,14
214 513 00	13	13	15	12	50	150	200	0,18
214 514 00	14	14	16	12	50	150	200	0,21
214 516 00	16	16	18	12	50	150	200	0,27
214 517 00	17	17	19	16	50	150	200	0,33
214 519 00	19	19	21	16	50	180	230	0,46
214 521 00	21	21	23	16	50	180	230	0,55
214 523 00	23	23	25	16	50	180	230	0,64
214 527 00	27	27	29	16	50	180	230	0,86
214 531 00	31	31	33	16	50	180	230	1,12
214 535 00	35	35	37	16	50	180	230	1,40
214 537 00	37	37	39	16	50	180	230	1,56
214 545 00	45	45	47	16	50	180	230	2,28
214 552 00	52	52	54	16	50	180	230	3,02
214 557 00	57	57	59	16	50	180	230	3,61

Module 1.5

Product No.	Number of teeth	d mm	d_a mm	ND mm	NL mm	b mm	L mm	Weight kg
218 513 00	13	19,5	22,5	16	50	150	200	0,41
218 514 00	14	21	24	16	50	150	200	0,46
218 516 00	16	24	27	16	50	150	200	0,58
218 517 00	17	25,5	28,5	16	50	180	230	0,77
218 519 00	19	28,5	31,5	16	50	180	230	0,94
218 521 00	21	31,5	34,5	16	50	180	230	1,14
218 527 00	27	40,5	43,5	16	50	180	230	1,84
218 532 00	32	48	51	16	50	180	230	2,57

Module 2.0

Product No.	Number of teeth	d mm	d_a mm	ND mm	NL mm	b mm	L mm	Weight kg
241 513 00	13	26	30	16	50	200	250	0,87
241 514 00	14	28	32	16	50	200	250	0,99
241 516 00	16	32	36	16	50	200	250	1,28
241 517 00	17	34	38	16	50	200	250	1,44
241 519 00	19	38	42	16	50	200	250	1,79
241 521 00	21	42	46	16	50	200	250	2,17
241 523 00	23	46	50	16	50	200	250	2,61
241 527 00	27	54	58	16	30	220	250	3,89
241 529 00	29	58	62	16	30	220	250	4,49
241 542 00	42	84	88	16	30	220	250	9,48



Reworking within 24h-service possible. Custom made parts on request.

Spur Gears Metric Pitch, Straight Teeth, Made from Steel and Stainless Steel

Material: Steel C45.
Stainless steel 1.4305

STAINLESS

Tooth quality 8d25 DIN 3967.
Pressure angle 20°.
Standard design with one-sided hub.
Other models and number of teeth on request.

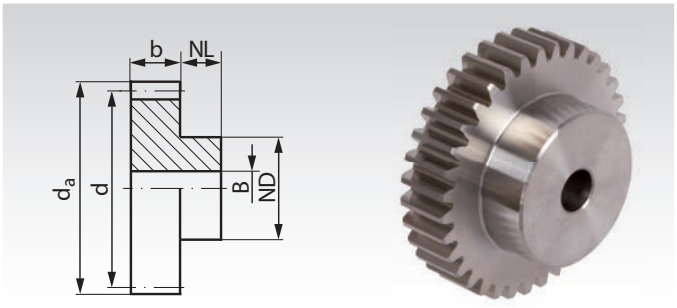

Ordering Details: e.g.: Product No. 205 012 00, spur gear, steel C45, pitch 5 mm, 12 teeth

Pitch 5mm (Module 1.59) Tooth width b = 12 mm

Product No. Steel	Product No. Stainless Steel	Number of teeth	b mm	d_a mm	d mm	NL mm	ND mm	B^{H7} mm	perm. MT* Steel Nm	per. MT* Stainless Steel Nm	Weight kg
205 012 00	**205 990 12**	12	12	22,3	19,1	13	14	6	0,8	0,4	0,03
205 015 00	**205 990 15**	15	12	27,0	23,9	13	18	6	1,1	0,5	0,06
205 018 00	**205 990 18**	18	12	31,8	28,6	13	20	8	1,4	0,7	0,07
205 020 00	**205 990 20**	20	12	35,0	31,8	13	20	8	1,9	0,9	0,10
205 024 00	**205 990 24**	24	12	41,4	38,2	13	25	8	2,9	1,3	0,14
205 025 00	**205 990 25**	25	12	43,0	39,8	13	25	8	3,1	1,4	0,14
205 030 00	**205 990 30**	30	12	50,9	47,7	13	30	10	4,8	2,2	0,20
205 036 00	**205 990 36**	36	12	60,5	57,3	13	40	10	7,3	3,4	0,32
205 040 00	**205 990 40**	40	12	66,8	63,6	13	40	10	9,4	4,3	0,36
205 045 00	**205 990 45**	45	12	74,8	71,6	13	45	10	12,4	5,7	0,45
205 050 00	**205 990 50**	50	12	82,7	79,6	13	50	12	16,7	7,7	0,56
205 060 00	**205 990 60**	60	12	98,6	95,5	13	60	12	26,4	12,1	0,82

Pitch 10mm (Module 3.18) Tooth width b = 25 mm

Product No. Steel	Product No. Stainless Steel	Number of teeth	b mm	d_a mm	d mm	NL mm	ND mm	B^{H7} mm	perm. MT* Steel Nm	per. MT* Stainless Steel Nm	Weight kg
210 012 00	**210 990 12**	12	25	44,6	38,2	15	25	10	9,8	4,5	0,22
210 015 00	**210 990 15**	15	25	54,1	47,7	15	30	12	13,7	6,3	0,38
210 018 00	**210 990 18**	18	25	63,7	57,3	15	40	15	17,3	8,0	0,50
210 020 00	**210 990 20**	20	25	70,0	63,7	15	40	15	22,4	10,3	0,60
210 024 00	**210 990 24**	24	25	82,8	76,4	15	50	15	34,3	15,8	0,86
210 025 00	**210 990 25**	25	25	85,9	79,6	15	50	15	37,8	17,4	0,96
210 030 00	**210 990 30**	30	25	101,9	95,5	15	60	20	58	27	1,45
210 036 00	**210 990 36**	36	25	121,0	114,6	15	70	20	97	45	2,15
210 040 00	**210 990 40**	40	25	133,7	127,3	15	80	20	131	60	2,68
210 045 00	**210 990 45**	45	25	149,6	143,2	20	80	20	179	82	3,44
210 050 00	**210 990 50**	50	25	165,5	159,2	20	80	20	236	108	4,10
210 060 00	**210 990 60**	60	25	197,3	191,0	20	90	25	399	184	5,79

* Basis of calculations see page 197.

Matching Gear Racks

Page 262

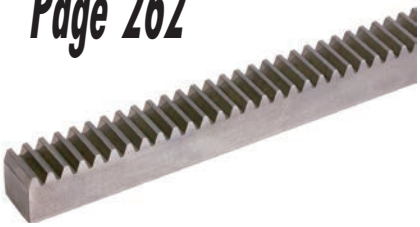



Reworking within 24h-service possible. Custom made parts on request.

Straight-Toothed Internal Gears Made from Brass

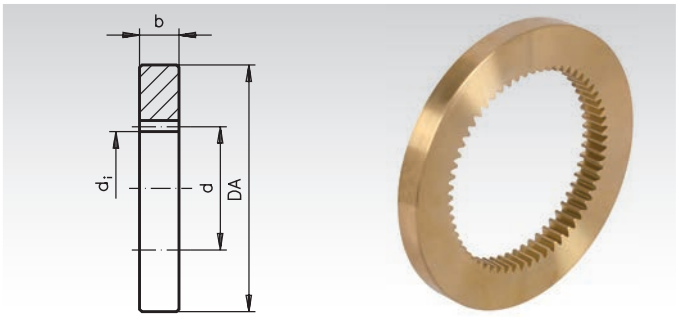

Tooth quality: 8, Teeth generated.

Pressure angle 20°.
Outside-diameter tolerance in accordance with DIN ISO 2768 middle.

Ordering Details: e.g.: Product No. 261 440 00, Internal Gear, Module 0.5, 40 Teeth

Module 0.5 / b = 4 mm, Brass Ms58 (2.0401)

Product No.	Number of teeth	b mm	d mm	d_i mm	DA mm	Weight g
261 440 00	40	4	20	19	36	23
261 445 00	45	4	22,5	21,5	40	28
261 448 00	48	4	24	23	40	27
261 450 00	50	4	25	24	45	37
261 460 00	60	4	30	29	50	42
261 470 00	70	4	35	34	55	45
261 490 00	90	4	45	44	70	74
261 410 00	100	4	50	49	70	63

Module 0.7 / b = 6 mm, Brass Ms58 (2.0401)

Product No.	Number of teeth	b mm	d mm	d_i mm	DA mm	Weight g
262 440 00	40	6	28	26,6	48	59
262 445 00	45	6	31,5	30,1	50	58
262 448 00	48	6	33,6	32,2	55	75
262 450 00	50	6	35	33,6	55	74
262 460 00	60	6	42	40,6	65	96
262 470 00	70	6	49	47,6	70	97
262 480 00	80	6	56	54,6	80	126
262 490 00	90	6	63	61,6	85	128
262 410 00	100	6	70	68,6	95	171

Module 1.0 / b = 8 mm, Brass Ms58 (2.0401)*

Product No.	Number of teeth	b mm	d mm	d_i mm	DA mm	Weight g
263 430 00	30	8	30	28	55	108
263 436 00	36	8	36	34	60	116
263 440 00	40	8	40	38	65	137
263 445 00	45	8	45	43	70	151
263 448 00	48	8	48	46	75	172
263 450 00	50	8	50	48	75	159
263 455 00	55	8	55	53	80	174
263 460 00	60	8	60	58	85	182
263 465 00	65	8	65	63	90	204
263 470 00	70	8	70	68	95	218
263 480 00	80	8	80	78	105	246
263 490 00	90	8	90	88	115	265
263 410 00*	100	8	100	98	125	293
263 412 00*	120	8	120	118	145	332

* From Ø 125mm: bronze 2.1076.

Straight-Toothed Internal Gears Made from Steel

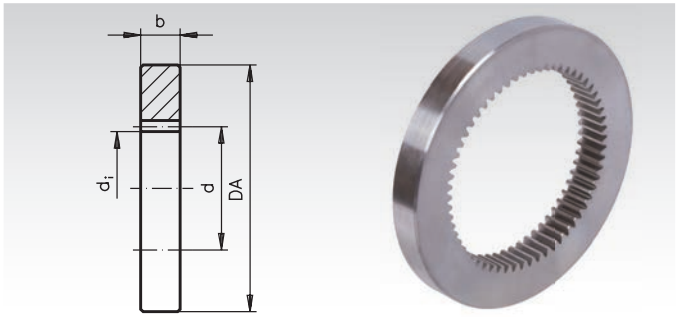

Tooth quality: 8, Teeth generated.

Pressure angle 20°.
Outside-diameter tolerance in accordance with DIN ISO 2768 middle.

Ordering Details: e.g.: Product No. 224 425 00, Internal Gear, Module 1, Width 10, 25 Teeth

Module 1.0 / b = 10 mm, Steel C45

Product No.	Number of teeth	b mm	d mm	d_i mm	DA mm	Weight g
224 425 00	25	10	25	23	50	113
224 430 00	30	10	30	28	55	128
224 436 00	36	10	36	34	60	141
224 440 00	40	10	40	38	65	156
224 445 00	45	10	45	43	70	180
224 448 00	48	10	48	46	75	198
224 450 00	50	10	50	48	75	185
224 460 00	60	10	60	58	85	213
224 470 00	70	10	70	68	95	249
224 472 00	72	10	72	70	100	294
224 480 00	80	10	80	78	105	275
224 490 00	90	10	90	88	115	306
224 410 00	100	10	100	98	125	342
224 412 00	120	10	120	118	150	488

Module 1.5 / b = 15 mm, Steel C45

Product No.	Number of teeth	b mm	d mm	d_i mm	DA mm	Weight g
228 425 00	25	15	37,5	34,5	70	320
228 430 00	30	15	45	42	75	328
228 436 00	36	15	54	51	85	392
228 440 00	40	15	60	57	90	413
228 445 00	45	15	67,5	64,5	100	497
228 448 00	48	15	72	69	100	465
228 450 00	50	15	75	72	105	489
228 460 00	60	15	90	87	120	558
228 470 00	70	15	105	102	135	653
228 472 00	72	15	108	105	140	716
228 480 00	80	15	120	117	150	738
228 490 00	90	15	135	132	170	975
228 410 00	100	15	150	147	190	1241
228 412 00	120	15	180	177	220	1441

Module 2.0 / b = 16 mm, Steel C45

Product No.	Number of teeth	b mm	d mm	d_i mm	DA mm	Weight g
241 430 00	30	16	60	56	95	530
241 436 00	36	16	72	68	107	599
241 440 00	40	16	80	76	115	662
241 445 00	45	16	90	86	125	729
241 448 00	48	16	96	92	131	761
241 450 00	50	16	100	96	135	783
241 455 00	55	16	110	106	145	865
241 460 00	60	16	120	116	155	930
241 465 00	65	16	130	126	165	999
241 470 00	70	16	140	136	175	1070
241 472 00	72	16	144	140	185	1313
241 480 00	80	16	160	156	195	1202
241 490 00	90	16	180	176	220	1538
241 410 00	100	16	200	196	240	1711
241 412 00	120	16	240	236	280	2014

Ratchet Wheels Made from Steel

Material: C45Pb up to 80 mm diameter, above C45. Unhardened.

Without Hub. Tip angle 60°.

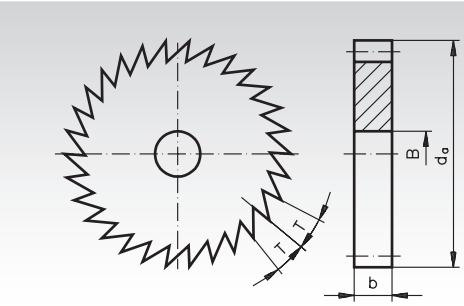



Ordering Details:
e.g.: Product No. 223 720 00, Ratchet Wheel, pitch 3.14, 20 Teeth

Product No.	Number of teeth	Tooth Width b mm	Pitch mm	Tip Ø d_a mm	B mm	Weight g
223 720 00	20	4	3,14	20	6	7
223 730 00	30	9	3,14	30	6	45
223 740 00	40	4	3,14	40	10	33
223 760 00	60	4	3,14	60	15	78
223 780 00	80	4	3,14	80	15	145
227 720 00	20	6	4,71	30	8	55
227 740 00	40	6	4,71	60	12	116
227 760 00	60	6	4,71	90	15	274
227 780 00	80	6	4,71	120	20	494
227 710 00	100	6	4,71	150	20	781
227 712 00	120	9	4,71	180	20	1723



Ratchet Braces Made from Steel

Material: Steel St37, unhardened, without bore.

Tip angle 60°.

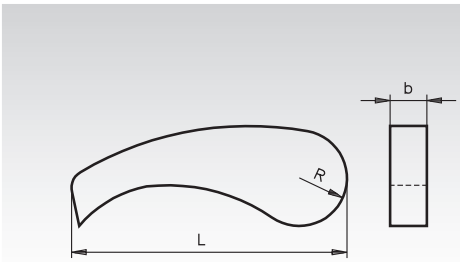



Ordering Details:
e.g.: Product No. 223 701 00, Ratchet Brace, Steel

Product No.	Length L approx. in mm	Radius R approx. in mm	Width b approx. in mm	Weight g
223 701 00	49,5	9	4	20
227 701 00	49,5	9	6	28
227 702 00	75	13	9	127



Reworking within 24h-service possible. Custom made parts on request.

Spur Gears Made from Brass and Steel with One-Sided Hub, Helical Tooth System

Material: Module 0,3/0,5: Brass Ms58 (2.0401).
Module 1,0: Steel 11SMnPb30.

20° helical tooth system. Pressure angle 20°. Milled teeth.

These gears are designed to be used in combination with the helical-toothed gear racks page 257. If this gear is used to drive a mating gear instead, this mating gear must have the same lead angle and the opposite tooth direction (left hand).

Ordering Details: e.g.:
Product No. 269 012 00, Spur Gear, Helical Tooth System, Module 0.3, 12 Teeth Right Hand

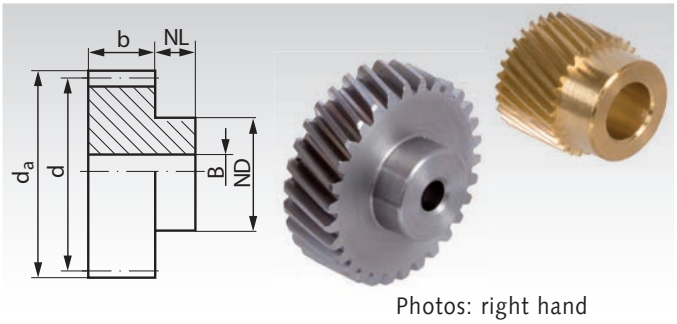

Photos: right hand

Module 0.3 from Ms58 (2.0401) Tooth Width b = 5 mm

Product No. Right Hand	Number of teeth	b mm	d_a mm	d mm	NL mm	ND mm	B^{H7} mm	perm. MT* Ncm	Weight g
269 012 00	12	5	4,4	3,83	4	3	2,0	0,7	0,5
269 015 00	15	5	5,4	4,79	4	4	2,5	1,0	0,7
269 018 00	18	5	6,4	5,75	4	5	3	1,6	1,2
269 020 00	20	5	7,0	6,39	4	6	3,5	2,0	1,4
269 024 00	24	5	8,3	7,66	4	7	4,5	3,0	1,9
269 030 00	30	5	10,2	9,58	5	9	5	5,0	4,0

Module 0.5 from Ms58 (2.0401) Tooth Width b = 10 mm

Product No. Right Hand	Number of teeth	b mm	d_a mm	d mm	NL mm	ND mm	B^{H7} mm	perm. MT* Ncm	Weight g
269 218 00	18	10	10,6	9,58	6	8	4	9,6	6,7
269 222 00	22	10	12,7	11,71	6	10	6	15,0	9,6
269 225 00	25	10	14,3	13,30	6	12	6	20,5	17,6
269 230 00	30	10	17,0	15,96	6	14	8	31,0	24,3
269 234 00	34	10	19,1	18,09	6	16	8	42,0	27,0
269 240 00	40	10	22,3	21,28	8	18	8	60,0	38,0

Module 1.0 from Steel 11SMnPb30 Tooth Width b = 10 mm

Product No. Right Hand	Product No. Left Hand	Number of teeth	b mm	d_a mm	d mm	NL mm	ND mm	B^{H7} mm	perm. MT* Ncm	Weight g
214 210 00	**214 310 00**	10	10	12,6	10,64	6	8	4	11	7,3
214 215 00	**214 315 00**	15	10	18,0	15,96	6	12	5	26	17,9
214 218 00	**214 318 00**	18	10	21,2	19,16	6	12	5	39	24,4
214 220 00	**214 320 00**	20	10	23,3	21,28	6	15	5	50	32,5
214 224 00	**214 324 00**	24	10	27,5	25,54	6	15	5	78	44,4
214 225 00	**214 325 00**	25	10	28,6	26,60	6	15	5	85	47,8
214 230 00	**214 330 00**	30	10	33,9	31,93	6	15	5	131	66,9
214 236 00	**214 336 00**	36	10	40,3	38,31	6	18	6	201	96,9
214 240 00	**214 340 00**	40	10	44,6	42,57	6	18	6	258	118,3
214 250 00	**214 350 00**	50	10	55,2	53,21	8	18	6	436	184,4

*Basis of calculations see page 197.

Helical Tooth Gear racks Page 257





Reworking within 24h-service possible. Custom made parts on request.

Precision Spur Gears, Helical Tooth System, Case Hardened, with Ground Teeth Flanks

Material: Steel 16MnCr5.

Tooth quality 7e25.
Helical tooth system, left hand 19° 31′ 42″.
Case hardened, approx. 60 HRC.
Keyways in accordance with DIN 6885/1, tolerance P9.
Teeth, bores and faces ground. Matching helical-toothed gear racks page 264.

Ordering Details: e.g.: Product No. 251 020 20, Spur gear, Steel 16 MnCr5, Module 2.0, 20 Teeth, ground

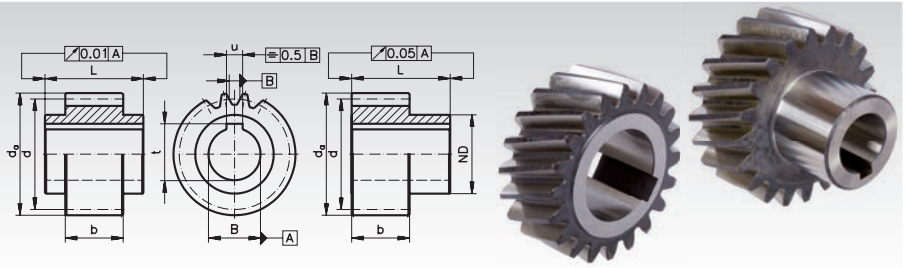

Figure 1 | Figure 1+2 Middle of tooth gap | Figure 2 | Figure 1 | Figure 2

Module 2.0 (Pitch 6.667mm), Tooth Width b = 28 mm

Product No.	Number of teeth	b mm	Figure	d_a mm	d mm	d x π mm	B^{H6} mm	ND mm	L mm	u mm	t mm	perm. MT* Nm	Weight kg
251 020 20	20	28	1	46,4	42,44	133,33	20	30	30	6	22,8	115	0,3
251 020 22	20	28	1	46,4	42,44	133,33	22	30	30	6	24,8	115	0,3
251 021 16	21	28	1	48,6	44,56	140,00	16	25	30	5	18,3	130	0,3
251 021 22	21	28	2	48,6	44,56	140,00	22	36	56	6	24,8	130	0,2
251 025 20	25	28	1	57,1	53,05	166,67	20	30	30	6	22,8	195	0,4
251 025 25	25	28	1	57,1	53,05	166,67	25	36	30	8	28,3	195	0,4
251 028 35	28	28	1	63,4	59,42	186,67	35	48	30	10	38,3	220	0,4
251 030 16	30	28	1	67,7	63,66	200,00	16	25	30	5	18,3	235	0,7
251 030 20	30	28	1	67,7	63,66	200,00	20	30	30	6	22,8	235	0,6
251 030 22	30	28	2	67,7	63,66	200,00	22	36	56	6	24,8	235	0,6
251 030 25	30	28	1	67,7	63,66	200,00	25	36	30	8	28,3	235	0,8
251 030 30	30	28	2	67,7	63,66	200,00	30	50	60	8	33,3	235	0,8
251 030 32	30	28	2	67,7	63,66	200,00	32	55	65	10	35,3	235	0,8
251 032 20	32	28	1	71,9	67,91	213,33	20	30	30	6	22,8	275	0,8
251 032 25	32	28	1	71,9	67,91	213,33	25	36	30	8	28,3	275	0,7
251 032 35	32	28	1	71,9	67,91	213,33	35	48	30	10	38,3	275	0,6
251 036 35	36	28	1	80,4	76,39	240,00	35	48	30	10	38,3	290	0,8
251 039 32	39	28	2	86,8	82,76	260,00	32	55	65	10	35,3	310	1,3
251 040 35	40	28	1	88,9	84,88	266,67	35	48	30	10	38,3	330	1,1

Module 3.0 (Pitch 10.00mm), Tooth Width b = 28 mm

Product No.	Number of teeth	b mm	Figure	d_a mm	d mm	d x π mm	B^{H6} mm	ND mm	L mm	u mm	t mm	perm. MT* Nm	Weight kg
253 020 22	20	28	2	69,7	63,66	200,00	22	36	56	6	24,8	275	0,6
253 020 25	20	28	2	69,7	63,66	200,00	25	44	60	8	28,3	275	0,7
253 020 30	20	28	1	69,7	63,66	200,00	30	45	30	8	33,3	275	0,8
253 020 32	20	28	2	69,7	63,66	200,00	32	55	65	10	35,3	275	0,8
253 020 35	20	28	1	69,7	63,66	200,00	35	48	30	10	38,3	275	0,7
253 022 25	22	28	1	76,0	70,03	220,00	25	36	30	8	28,3	345	0,8
253 022 30	22	28	1	76,0	70,03	220,00	30	45	30	8	33,3	345	0,7
253 022 35	22	28	1	76,0	70,03	220,00	35	48	30	10	38,3	345	0,7
253 025 22	25	28	2	85,6	79,58	250,00	22	36	56	6	24,8	440	1,0
253 025 25	25	28	1	85,6	79,58	250,00	25	36	30	8	28,3	440	1,0
253 025 30	25	28	1	85,6	79,58	250,00	30	45	30	8	33,3	440	1,0
253 025 32	25	28	2	85,6	79,58	250,00	32	55	65	10	35,3	440	1,2
253 025 35	25	28	1	85,6	79,58	250,00	35	48	30	10	38,3	440	0,9
253 025 40	25	28	1	85,6	79,58	250,00	40	70	50	12	43,3	440	1,1

Note

These gears are designed to be used in combination with the helical-toothed gear racks page 264. If this gear is used to drive a mating gear instead, this mating gear must have the same lead angle and the opposite tooth direction (right hand).

Spur Gears Metric Pitch, Straight Teeth Page 248

Helical Tooth Gear racks Page 264



Precision Spur Gears, Helical Tooth System, Case Hardened with Ground Teeth Flanks

Material: Steel 16MnCr5.

Tooth quality 7e25.
Helical tooth system, left hand 19° 31′ 42″.
Case hardened, approx. 60 HRC.
Keyways in accordance with DIN 6885/1, tolerance P9.
Teeth, bores and faces ground. Matching helical-toothed gear racks page 264.

Ordering Details: e.g.: Product No. 254 015 35, Spur gear, Steel 16 MnCr5, Module 4.0, 15 Teeth, Ground

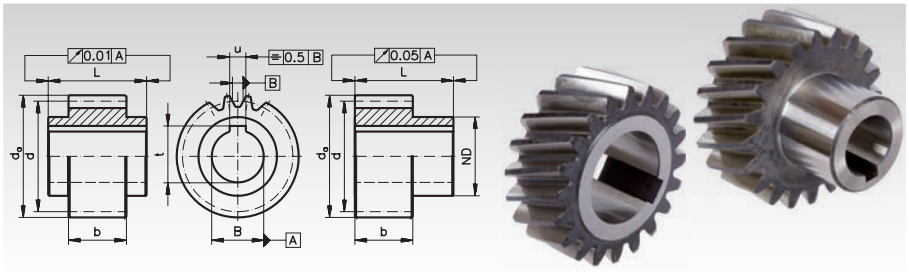

Figure 1 | Figure 1+2 Middle of tooth gap | Figure 2 | Figure 1 | Figure 2

Module 4.0 (Pitch 13.333mm), Tooth Width b = 40 mm

Product No.	Number of teeth	b mm	Figure	d_a mm	d mm	d x π mm	B^{H6} mm	ND mm	L mm	u mm	t mm	perm. MT* Nm	Weight kg
254 015 35	15	40	1	71,7	63,66	200,00	35	52	50	10	38,3	670	1,4
254 018 32	18	40	2	84,4	76,39	240,00	32	55	75	10	35,3	900	1,5
254 020 35	20	40	1	92,9	84,88	266,67	35	52	50	10	38,3	975	1,9
254 020 45	20	40	1	92,9	84,88	266,67	45	65	50	14	48,8	975	1,6
254 021 32	21	40	2	97,1	89,13	280,00	32	55	75	10	35,3	1050	2,0
254 021 35	21	40	2	97,1	89,13	280,00	35	55	75	10	38,3	1050	1,9
254 021 40	21	40	2	97,1	89,13	280,00	40	62	75	12	43,3	1050	1,9
254 021 45	21	40	2	97,1	89,13	280,00	45	68	75	14	48,8	1050	1,7
254 022 35	22	40	1	101,4	93,37	293,33	35	52	50	10	38,3	1100	2,3
254 022 45	22	40	1	101,4	93,37	293,33	45	65	50	14	48,8	1100	2,0
254 024 32	24	40	2	109,9	101,86	320,00	32	55	75	10	35,3	1150	2,6
254 024 35	24	40	2	109,9	101,86	320,00	35	55	75	10	38,3	1150	2,5
254 024 40	24	40	2	109,9	101,86	320,00	40	62	75	12	43,3	1150	2,5
254 024 45	24	40	2	109,9	101,86	320,00	45	68	75	14	48,8	1150	2,3
254 024 55	24	40	2	109,9	101,86	320,00	55	80	80	16	59,3	1150	2,4
254 025 35	25	40	1	114,1	106,10	333,33	35	52	50	10	38,3	1200	3,1
254 025 45	25	40	1	114,1	106,10	333,33	45	65	50	14	48,8	1200	2,8

Module 5.0 (Pitch 16.666mm), Tooth Width b = 50 mm

Product No.	Number of teeth	b mm	Figure	d_a mm	d mm	d x π mm	B^{H6} mm	ND mm	L mm	u mm	t mm	perm. MT* Nm	Weight kg
255 018 45	18	50	2	105,5	95,49	300,00	45	68	85	14	48,8	1575	2,7
255 024 45	24	50	2	137,3	127,32	400,00	45	68	85	14	48,8	2085	4,9
255 024 55	24	50	2	137,3	127,32	400,00	55	80	90	16	59,3	2085	4,9
255 024 75	24	50	2	137,3	127,32	400,00	75	110	110	20	79,9	2085	5,6

Note

These gears are designed to be used in combination with the helical-toothed gear racks page 264. If this gear is used to drive a mating gear instead, this mating gear must have the same lead angle and the opposite tooth direction (right hand).

Helical Tooth Gear racks Page 264



Rolling bearings at MÄDLER®:



Ball bearings, open



Ball bearings, 2Z



Ball bearings, 2RS

The premium brand
- for the sophisiticated application

The reliable brand
- the inexpensive option



Angular contact ball bearings



Self aligning ball bearings



Cylindrical roller bearings



Spherical roller bearings



Tapered roller bearings

The rolling bearings are to find:

- in this catalog page 416
- on the internet at www.maedler.de

Square gear racks with straight teeth





Material/Version	Module	Page
Polyacetal / Polycetone resin, die cast	0,5-3,0	256
POM, milled	0,5-3,0	256
Brass, milled	0,3-1,0	257
Steel, milled quality 8	0,5-8,0	258
Steel, milled quality 9	1,0-6,0	259
Steel, teeth hardened	2,0-6,0	259
Steel, hardened and ground	1,0-3,0	260
Stainless steel, milled STAINLESS	1,0-4,0	261
Steel and stainless steel, metric pitch STAINLESS	1,59/3,18 (5mm/10mm)	262

Round gear racks with straight teeth



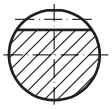

Material/Version	Module	Page
Steel, milled	1,0-6,0	263
High strength steel, milled	1,0-6,0	263
Stainless steel, milled STAINLESS	1,0-4,0	263
Steel and stainless steel, metric pitch.. STAINLESS	1,59/3,18 (5mm/10mm)	262

Helical tooth gear racks, square, left hand

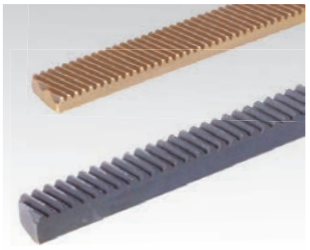

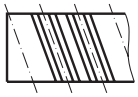

Material/Version	Module	Page
Brass, milled	0,3-0,5	257
Steel, milled	1,0	257

Helical tooth gear racks, square, right hand



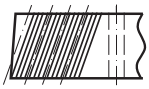

Material/Version	Module	Page
Steel, milled, tempered	2,0-5,0	264
Steel, hardened and ground	2,0-5,0	265

Spur gears
Page 194





Reworking within 24h-service possible. Custom made parts on request.

Gear Racks Made from Plastic, Straight Tooth System

Because of the material used, plastic gear racks are not straightened.

Material reference values page 821.

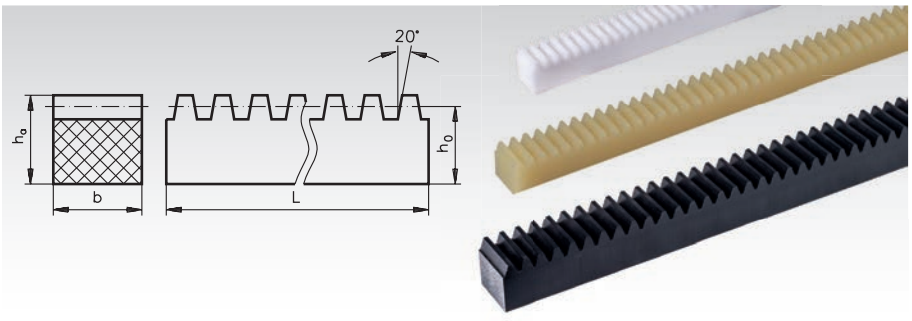

Ordering Details: e.g.: Product No. 281 601 00, Gear Rack Polyketone, Module 0.5, 4x4.5x250 mm

Gear Racks Made from Polyacetal resin (white) / Polyketone Resin (ivory), Die-Cast Version

Material Polyacetal: Standard quality with high hardness.

Material Polyketone (PK): Lower friction leads to much larger life-span, even without lubrication. Much higher safety against tooth breaking, specially at longterm usage.

Temperature Range: -40°C to +140°C due to the load.

Pressure angle 20°.

	Product No. Polyacetal	Product No. Polyketone	b mm	h_a mm	h_0 mm	Nom. Length L* mm	Weight Polyacetal g	Weight PK g
Module 0.5	281 601 00	281 601 01	4	4,5	4	250	5,2	4,6
	281 602 00	281 602 01	4	6	5,5	250	7,5	6,8
Module 0.7	282 601 00	282 601 01	6	6,7	6	250	12,0	10,6
Module 1.0	283 601 00	283 601 01	9	9	8	250	24,8	21,8
Module 1.25	284 601 00	284 601 01	10	11	9,75	250	35,0	30,8
Module 1.5	285 601 00	285 601 01	12	12	10,5	250	42,3	37,2
Module 2.0	286 601 00	286 601 01	15,4	11	9	250	44,8	39,3
Module 2.5	287 601 00	287 601 01	17	13	10,5	250	58,2	51,1
Module 3.0	288 601 00	288 601 01	19,4	15	12	250	75,8	66,6

Gear Racks Made from POM, White, Milled Teeth, Slim Version

Material: POM, white (nature)

Pressure angle 20°.

The teeth on the gear racks are manufactured using an over-head milling cutter. This leads to negative tolerances. Dimensions h_a and h_0 up to module 2: -0.2 mm from module 2.5: -0.3 mm.

From module 2, except for nominal length 500 mm, cut for continuous linking.

** Material PET.

	Product No.	b mm	h_a mm	h_0 mm	Nominal Length L* mm	Weight g
Module 0.5**	291 601 00**	4	6	5,5	250	8
Module 0.7	292 601 00	5	7	6,3	250	11
Module 1.0	293 601 00	10	10	9,0	250	32
	293 603 00	10	10	9,0	500	63
Module 1.25	294 601 00	10	10	8,75	250	31
	294 603 00	10	10	8,75	500	61
Module 1.5	295 601 00	15	15	13,5	250	72
	295 603 00	15	15	13,5	500	140
	295 605 00	15	15	13,5	1000	285
Module 2.0	296 603 00	16	16	14,0	500	157
	296 605 00	16	16	14,0	1000	312
	296 607 00	16	16	14,0	1500	466
Module 2.5	297 603 00	20	20	17,5	500	243
	297 605 00	20	20	17,5	1000	489
	297 607 00	20	20	17,5	1500	735
Module 3.0	298 603 00	25	25	22,0	500	385
	298 605 00	25	25	22,0	1000	772
	298 607 00	25	25	22,0	1500	1146

Gear Racks Made from POM, White or Black, Milled Teeth

Material: POM, on choice white (nature) or black.

Pressure angle 20°.

The teeth on the gear racks are manufactured using an over-head milling cutter. This leads to negative tolerances. Dimensions h_a and h_0 up to module 2: -0.2 mm from module 2.5 to 3: -0.3 mm.

Module 2, nominal length 1000 mm, and from module 3, the racks are cut for continuous linking.

	Product No. White	Product No. Black	b mm	h_a mm	h_0 mm	Nominal Length L* mm	Weight g
Module 1.0	293 116 01	293 117 01	15	15	14,0	250	75
	293 116 03	293 117 03	15	15	14,0	500	149
	293 116 05	293 117 05	15	15	14,0	1000	300
Module 1.5	295 116 01	295 117 01	17	17	15,5	250	92
	295 116 03	295 117 03	17	17	15,5	500	186
	295 116 05	295 117 05	17	17	15,5	1000	400
Module 2.0	296 116 01	296 117 01	20	20	18,0	250	127
	296 116 03	296 117 03	20	20	18,0	500	254
	296 116 05	296 117 05	20	20	18,0	1000	500
Module 2.5	297 116 01	297 117 01	25	25	22,5	250	198
	297 116 03	297 117 03	25	25	22,5	500	397
	297 116 05	297 117 05	25	25	22,5	1000	800
Module 3.0	298 116 01	298 117 01	30	30	27,0	250	400
	298 116 03	298 117 03	30	30	27,0	500	800
	298 116 05	298 117 05	30	30	27,0	1000	1600

* The real length is roughly one multiple of the pitch.

Gear Racks Made from Brass (Ms58), Straight Tooth System, Precisely Straightened

Pressure angle 20°.
The teeth on the gear racks are manufactured using an overhead milling cutter. This leads to negative tolerances

Dimension h_a and h_0 = -0.2 mm

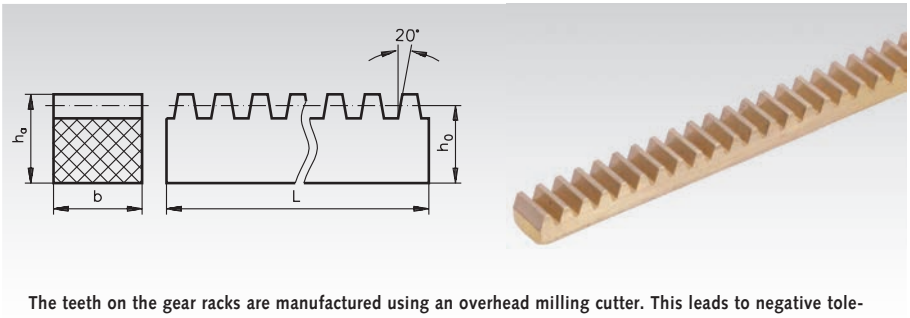

The teeth on the gear racks are manufactured using an overhead milling cutter. This leads to negative tolerances. Dimension h_a and h_0 up to module 2 -0.2 mm.

Ordering Details: e.g.: Product No. 260 601 00, Straight-Toothed Gear Rack, Module 0.3, 250 mm

Teeth cut with reference profile (RP) II in accordance with DIN 867/DIN 3972.

	Product No.	b mm	h_a mm	h_0 mm	Nominal Length L* mm	Weight g
Module 0.3	**260 601 00**	2	4	3,7	250	14
Module 0.5	**261 601 00**	2	4	3,5	250	14
Module 0.7	**262 601 00**	4	6	5,3	250	42
Module 1.0	**263 600 00**	7	5	4,0	250	56
	263 601 00	10	8	7,0	230**	131
	263 603 00	10	10	9,0	250	184
	263 605 00	10	10	9,0	500	371

* The real length is roughly one multiple of the pitch.
** Special length.

Gear Racks Made from Brass (Ms58) and Steel (C45KG), Helical Toothed, Precisely Straightened

20° helical tooth system, left-toothed.
Pressure angle 20°.

The teeth on the gear racks are manufactured using an overhead milling cutter. This leads to negative tolerances.

Dimensions h and h_0 = -0.2 mm.
The standardised left-toothed gear racks always need to be matched with a right-toothed pinion.

Ordering Details: e.g.: Product No. 269 601 00, Helical Toothed Gear Rack, Module 0.3, 250 mm

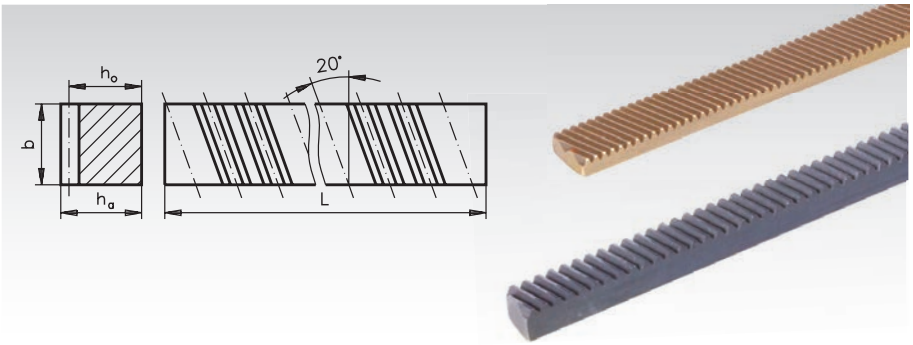

	Product No.	Material	b mm	h_a mm	h_0 mm	L mm	Weight g
Module 0.3	**269 601 00**	Ms58	5	3	2,7	250	29
Module 0.5	**269 605 00**	Ms58	10	4	3,5	250	70
	269 606 00	Ms58	10	4	3,5	500	139
Module 1.0	**224 655 00**	C45KG	10	10	9,0	500	344
	224 658 00	C45KG	10	10	9,0	1000	685

Matching helical-toothed spur gears see page 251.



Reworking within 24h-service possible. Custom made parts on request.

Gear Racks Made from Specially Treated Bright Steel C45KG, Milled Teeth, Straight Tooth System

Tooth quality 8d25
modelled on DIN 3962, 3967, 3968.
Pressure angle 20°. Precisely Straightened.
Cross-section tolerance h11 = -1/10 to 2/10 depending on size.

All gear racks from **module 2**, except for **nominal length 500 mm**, are cut of for **continuous linking**.
The teeth of the gear racks are not cut to join edge-to-edge, which leads to minor gaps when mounting. These gaps do, however, not cause any problems for the gears rolling across.

Total pitch error page 261.

Ordering Details: e.g.: Product No. 224 603 00, Gear Rack, C45KG, Module 1.0, 250 mm.

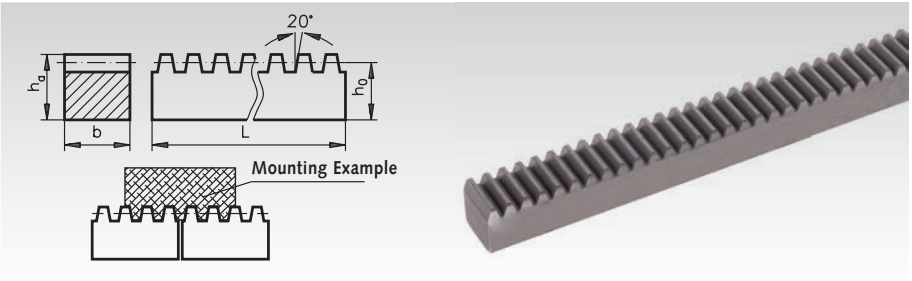

The teeth on the gear racks are manufactured using an overhead milling cutter. This leads to negative tolerances. Dimensions h_a and h_0 up to module 2 -0.2 mm, module 2.5-4 -0.3 mm, module 5-8 -0.4 mm

Teeth cut with reference profile (RP) II in accordance with DIN 867/DIN 3972.
Rounded edge at square bar of 15 up to 60 mm.
Chamfered edge at square bar of 80 mm

* Key Steel.
** St37K.

	Product No.	Tooth Width b mm	Overall Height h_a mm	h_0 mm	Nominal Length L mm	Effective Length mm	Weight kg
Module 0.5*	221 601 00	4	6	5,5	250	-	0,04
Module 0.7**	222 601 00	5	7	6,3	250	-	0,06
Module 1.0**	223 601 00	7	5	4,0	250	-	0,05
Module 1.0	224 603 00	10	10	9,0	250	-	0,17
	224 605 00	10	10	9,0	500	-	0,34
	224 608 00	10	10	9,0	1000	-	0,68
	224 610 00	15	15	14,0	500	-	0,81
	224 612 00	15	15	14,0	1000	-	1,61
Module 1.25	226 601 00	10	10	8,75	250	-	0,16
	226 603 00	10	10	8,75	500	-	0,33
	226 605 00	10	10	8,75	1000	-	0,66
Module 1.5	227 601 00	10	10	8,5	500	-	0,32
	227 605 00	10	10	8,5	1000	-	0,63
	228 601 00	15	10	8,5	1000	-	0,95
	228 603 00	15	15	13,5	500	-	0,77
	228 605 00	15	15	13,5	1000	-	1,54
	228 607 00	15	15	13,5	1500	-	2,33
Module 2.0	241 601 00	16	20	18,0	1000	1005,0 – 1	2,22
	241 603 00	20	20	18,0	500		1,38
	241 605 00	20	20	18,0	1000	1005,0 – 1	2,77
	241 607 00	20	20	18,0	1500	1501,0 – 1	4,12
	241 609 00	20	20	18,0	2000	2004,0 – 1,5	5,50
Module 2.5	242 601 00	20	25	22,5	1000	1005,0 – 1	3,47
	242 603 00	25	25	22,5	500		2,17
	242 605 00	25	25	22,5	1000	1005,0 – 1	4,31
	242 607 00	25	25	22,5	1500	1507,5 – 1	6,46
	242 609 00	25	25	22,5	2000	2002,5 – 1,5	8,61
Module 3.0	243 601 00	25	30	27,0	1000	1008,0 – 1,5	5,24
	243 603 00	30	30	27,0	500		3,17
	243 605 00	30	30	27,0	1000	1008,0 – 1,5	6,27
	243 607 00	30	30	27,0	1500	1507,5 – 1,5	9,33
	243 609 00	30	30	27,0	2000	2007,0 – 1,5	12,43
Module 4.0	244 601 00	30	40	36,0	1000	1005,0 – 1,5	8,43
	244 603 00	40	40	36,0	500		5,55
	244 605 00	40	40	36,0	1000	1005,0 – 1,5	11,14
	244 607 00	40	40	36,0	1500	1507,5 – 1	16,50
	244 609 00	40	40	36,0	2000	2010,0 – 1,5	22,50
Module 5.0	245 601 00	40	50	45,0	1000	1005,0 – 1,5	14,00
	245 603 00	50	50	45,0	500		8,50
	245 605 00	50	50	45,0	1000	1005,0 – 1,5	17,50
	245 607 00	50	50	45,0	1500	1507,5 – 1,5	26,00
	245 609 00	50	50	45,0	2000	2010,0 – 1,5	35,00
Module 6.0	246 601 00	60	60	54,0	500		12,50
	246 603 00	60	60	54,0	1000	998,5 – 1,5	25,00
	246 605 00	60	60	54,0	1500	1507,5 – 1,5	37,50
	246 607 00	60	60	54,0	2000	1997,5 – 1,5	50,00
Module 8.0	248 601 00	80	80	72,0	1000	1005,0 – 1,5	44,00
	248 603 00	80	80	72,0	1500	1507,0 – 1,5	66,00

Gear Racks Made from Steel C45, Milled Teeth, Straight Tooth System, Economy-Line

Material: Steel C45, burnished.

Tooth quality 9.
Pressure angle 20°.

From module 2.5 cut for continuous linking.

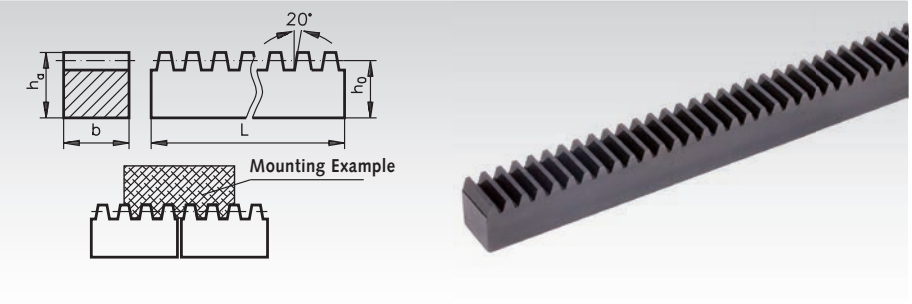

Ordering Details: e.g.: Product No. 224 116 08, Gear Rack, C45 , Module 1, 1000 mm

	Product No.	Tooth Width b mm	Overall Height h_a mm	h_0 mm	Nominal Length L mm	Effective Length mm	Weight kg
Module 1.0	**224 116 08**	10	10	9,0	1000	-	0,68
	224 116 09	10	10	9,0	2000	-	1,36
	224 116 12	15	15	14,0	1000	-	1,61
	224 116 19	15	15	14,0	2000	-	3,32
Module 1.5	**228 116 05**	15	15	13,5	1000	-	1,54
	228 116 09	15	15	13,5	2000	-	3,09
	228 116 12	17	17	15,5	1000	-	2,05
	228 116 19	17	17	15,5	2000	-	4,10
Module 2.0	**241 116 05**	20	20	18,0	1000	1005 -1	2,77
	241 116 09	20	20	18,0	2000	2004 -1,5	5,54
Module 2.5	**242 116 05**	25	25	22,5	1000	1005 -1	4,35
	242 116 09	25	25	22,5	2000	2002,5 -1,5	8,70
Module 3.0	**243 116 05**	30	30	27,0	1000	1008 -1,5	6,27
	243 116 09	30	30	27,0	2000	2007 -1,5	12,54
Module 4.0	**244 116 05**	40	40	36,0	1000	1005 -1,5	11,10
	244 116 09	40	40	36,0	2000	2010 -1,5	22,20
Module 5.0	**245 116 05**	50	50	45,0	1000	1005 -1,5	17,50
	245 116 09	50	50	45,0	2000	2010 -1,5	35,00
Module 6.0	**246 116 05**	60	60	54,0	1000	998 -1,5	24,60
	246 116 09	60	60	54,0	2000	1997 -1,5	49,20

Gear Racks Made from Bright Steel C45KG, Teeth Milled and Induction Hardened

Milled, quality 8.
Tooth area induction hardened, 54 + 4 HRC.
The hardening sets the tooth quality to 10-11.
Pressure angle 20°.
The gear racks are **cut for continuous linking**. The teeth of the gear racks are not cut to join edge-to-edge, which leads to minor gaps when mounting. These gaps do, however, not cause any problems for the gears rolling across.

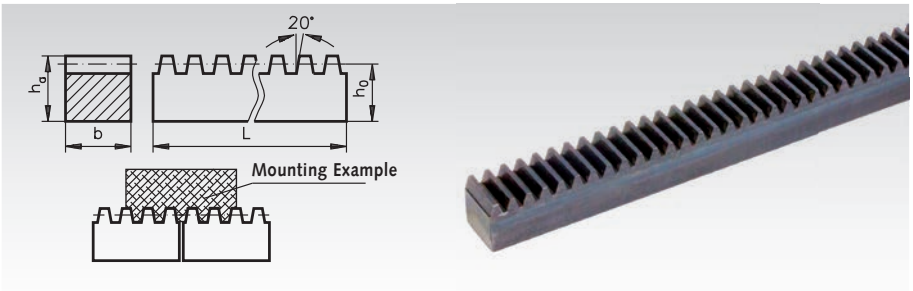

The teeth on the gear racks are manufactured using an overhead milling cutter. This leads to negative toleances. Dimensions h_a and h_0 at module 2 -0.2 mm, module 3-4 -0.3 mm, module 5-6 -0.4 mm

Teeth cut with reference profile (RP) II in accordance with DIN 867/DIN 3972. Rounded edge.

Ordering Details: e.g.: Product No. 241 886 05, Gear Rack, Module 2.0, 1000mm, hardened

	Product No.	Tooth Width b mm	Overall Height h_a mm	h_0 mm	Nominal Length L mm	Effective Length mm	Weight kg
Module 2.0	**241 886 05**	20	20	18,0	1000	1005,0 – 1	2,77
	241 886 09	20	20	18,0	2000	2004,0 – 1,5	5,50
Module 2.5	**242 886 05**	25	25	22,5	1000	1005,0 – 1,	4,31
	242 886 09	25	25	22,5	2000	2002,5 – 1,5	8,61
Module 3.0	**243 886 05**	30	30	27,0	1000	1008,0 – 1,5	6,27
	243 886 09	30	30	27,0	2000	2007,0 – 1,5	12,43
Module 4.0	**244 886 05**	40	40	36,0	1000	1005,0 – 1,5	11,14
	244 886 09	40	40	36,0	2000	2010,0 – 1,5	22,5
Module 5.0	**245 886 05**	50	50	45,0	1000	1005,0 – 1,5	17,5
	245 886 09	50	50	45,0	2000	2010,0 – 1,5	35,0
Module 6.0	**246 886 05**	60	60	54,0	1000	998,5 – 1,5	25,0
	246 886 09	60	60	54,0	2000	1997,5 – 1,5	50,0

Precision Gear Racks Made from Steel 16MnCr5, Tooth Area Induction Hardened, Teeth Ground

Tooth quality 7h25.
Pressure angle 20°.
Tooth area induction hardened,
HRC 58±2.
Ground all around including teeth.

From module 1.5 cut for continuous linking.
Angle accuracy 0.02 mm,
Parallelism on 500 mm = 0.03 mm,
on 1000 mm = 0.05 mm,
Tolerance to h_0 line
on 500 mm = 0.03 mm,
on 1000 mm = 0.05 mm.
The width is machined with a tolerance of 0.05.

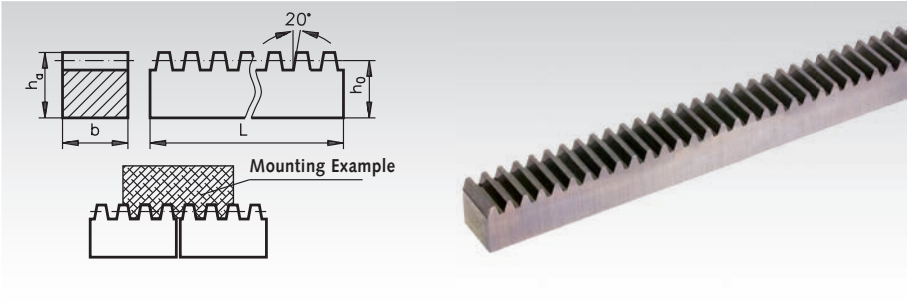

Ordering Details: e.g.: Product No. 224 683 00, Gear Rack, Steel 16MnCr5, Module 1.0, 500 mm long, Teeth Ground

	Product No.	Tooth Width b mm	Overall Height $h_a^{-0.1}$ mm	Height to Line h_0 mm	Nom. Length L mm	Eff. Length mm	Weight kg
Module 1.0	**224 683 00**	15	15	14	500	$500,0^{+1}$	0,81
Module 1.5	**228 683 00**	15	15	13,5	500	$499,1^{\pm 0,3}$	0,78
Module 2.0	**241 683 00**	20	20	18	500	$502,1^{\pm 0,3}$	1,40
	241 685 00	20	20	18	1000	$998,5^{\pm 0,3}$	2,53
Module 3.0	**243 683 00**	25	25	22	500	$498,9^{\pm 0,3}$	2,12
	243 685 00	25	25	22	1000	$998,4^{\pm 0,3}$	4,22

Matching Precision Spur Gears Page 242





Reworking within 24h-service possible. Custom made parts on request.

Gear Racks Made from Stainless Steel (Stainless), Milled Teeth, Straight Tooth System

Material: Stainless steel 1.4305
Tooth quality
8d25 modelled on DIN 3967.
Pressure angle 20°. Precisely Straightened.

From module 2, except for nominal length 500 mm, cut for continuous linking.

The teeth on the gear racks are manufactured using an overhead milling cutter. This leads to negative tolerances.

Dimensions h_a and h_o:
up to module 2 -0.2 mm
module 2.5 - 4 -0.3 mm

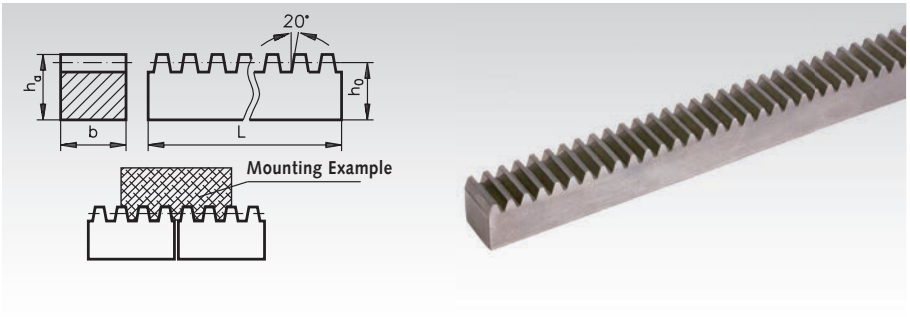

Ordering Details: e.g.: Product No. 224 996 05, Gear Rack, Module 1, 10 x 10x 500, Stainless

	Product No.	Tooth Width b mm	Overall Height h_a mm	h_0 mm	Nominal Length L mm	Effective Length mm	Weight kg
Module 1.0	**224 996 05**	10	10	9,0	500	-	0,34
	224 996 08	10	10	9,0	1000	-	0,68
Module 1.5	**228 996 03**	15	15	13,5	500	-	0,77
	228 996 05	15	15	13,5	1000	-	1,55
	228 996 07	15	15	13,5	1500	-	2,33
Module 2.0	**241 996 03**	20	20	18,0	500	-	1,38
	241 996 05	20	20	18,0	1000	1005,0 – 1	2,77
	241 996 07	20	20	18,0	1500	1501,0 – 1	4,12
	241 996 09	20	20	18,0	2000	2004,0 – 1,5	5,50
Module 2.5	**242 996 03**	25	25	22,5	500		2,17
	242 996 05	25	25	22,5	1000	1005,1 – 1	4,31
	242 996 07	25	25	22,5	1500	1507,5 – 1	6,46
	242 996 09	25	25	22,5	2000	2002,5 – 1,5	8,61
Module 3.0	**243 996 03**	30	30	27,0	500	-	3,17
	243 996 05	30	30	27,0	1000	1008,0 – 1,5	6,27
	243 996 07	30	30	27,0	1500	1507,5 – 1,5	9,33
	243 996 09	30	30	27,0	2000	2007,0 – 1,5	12,43
Module 4.0	**244 996 03**	40	40	36,0	500	-	5,55
	244 996 05	40	40	36,0	1000	1005,0 – 1,5	11,14
	244 996 07	40	40	36,0	1500	1507,5 – 1	16,50
	244 996 09	40	40	36,0	2000	2010,0 – 1,5	22,50

Total pitch error for steel racks in tooth quality 8

Total Pitch Error Fp along the lines of DIN 3962 quality 8 tolerance for teeth on spur gears, analogously applied on gear racks.
Value in µ = 1/1000 mm

Module	Permissible Pitch Error for Length in mm 250	500	1000	1500	2000
1.00 - 2.00	50	56	63	63	71
over 2.00 up to 3.55	50	63	71	71	80
over 3.55 up to 6.00	56	71	80	80	90
over 6.00 up to 10.00	63	71	80	80	90



Reworking within 24h-service possible. Custom made parts on request.

Gear racks with metric pitch, straight teeth, square

Material: Steel C45KG.
Stainless steel 1.4305.

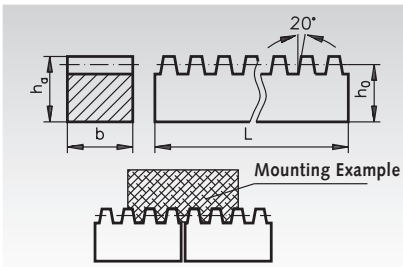

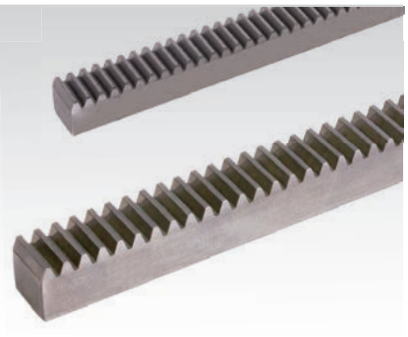

Tooth quality 8d25 modelled on DIN 3967.
Pressure angle 20°.

Pitch 10 mm, can be assembled together except for 500 mm nominal length.

The teeth on the gear racks are manufactured using an overhead milling cutter. This leads to negative tolerances.

Dim. h_a and h_0: Pitch 5 mm: -0.2 mm
Pitch 10 mm: -0.3 mm

Ordering Details: e.g.: Product No. 205 601 00, gear rack pitch 5mm, 250 mm long

	Product No. Steel	Product No. Stainless Steel	Tooth Width b mm	Overall Height h_a mm	h_0 mm	Nominal Length L mm	Weight kg
Pitch 5mm (Module 1.59)	**205 601 00**	**205 996 01**	15	15	13,4	250	0,39
	205 603 00	**205 996 03**	15	15	13,4	500	0,78
	205 605 00	**205 996 05**	15	15	13,4	1000	1,55
	205 609 00	**205 996 09**	15	15	13,4	2000	3,10
Pitch 10mm (Module 3.18)	**210 601 00**	**210 996 01**	30	30	26,8	250	1,59
	210 603 00	**210 996 03**	30	30	26,8	500	3,17
	210 605 00	**210 996 05**	30	30	26,8	1000	6,27
	210 609 00	**210 996 09**	30	30	26,8	2000	12,43

Round Gear racks with metric pitch, straight teeth

Material: Steel St50K (length 2000mm:C45K), diameter tolerance **h6, ground.**
Stainless steel 1.4305.
Diameter tolerance **h9.**

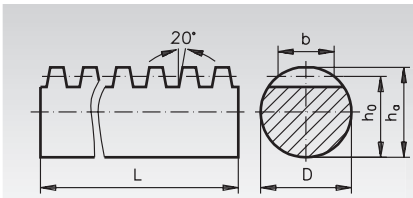



Tooth quality 8d25 modelled on DIN 3967.
Pressure angle 20°.

The teeth on the gear racks are manufactured using an overhead milling cutter. This leads to negative tolerances.

Dim. h_a and h_0: Pitch 5 mm: -0.2 mm
Pitch 10 mm: -0.3 mm

Ordering Details: e.g.: Product No. 205 631 00, round gear rack, pitch 5mm, 500mm long

	Product No. Steel	Product No. Stainless Steel	Nom. length L mm	D mm	h_0 mm	h_a mm	b mm	Weight kg
Pitch 5mm (Module 1.59)	**205 631 00**	**205 996 31**	500	15	13,4	15,0	9,4	0,64
	205 632 00	**205 996 32**	1000	15	13,4	15,0	9,4	1,28
	205 634 00	**205 996 34**	2000	15	13,4	15,0	9,4	2,56
Pitch 10mm (Module 3.18)	**210 631 00**	**210 996 31**	500	30	26,8	30,0	18,8	2,59
	210 632 00	**210 996 32**	1000	30	26,8	30,0	18,8	5,14
	210 634 00	**210 996 34**	2000	30	26,8	30,0	8,8	10,28

Matching Spur Gears Page 248





Reworking within 24h-service possible. Custom made parts on request.

Round Gear Racks Made From Steel

Tooth quality 8d25 modelled on DIN 3967.
Pressure angle 20°.
The teeth on the gear racks are manufactured using an overhead milling cutter. This leads to negative tolerances.
Dim. h_a and h_0: to module 2 -0.2 mm
module 2.5 - 4 -0.3 mm
module 5 - 6 -0.4 mm

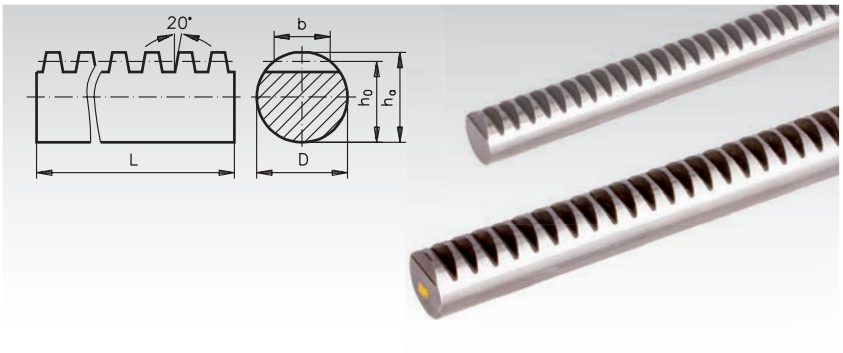

Ordering Details: e.g.: Product No. 224 631 00, Round gear rack St. , module 1, D 10 x 500 mm

Round Gear Racks Made From Steel, Milled Teeth, Straight Tooth System, Precisely Straightened

On choice: High Strength Steel!

Material standard:
St50K

Material High Strength:

Special steel with strength 1,000N/mm²

Diameter tolerance h6 ground.
Prod. No. 224 666 31 and 224 666 32
Ø tolerance h9.

Tooth flanks not ground.
Other dimensions, also from drawing, can be supplied at short notice.

	Product No. Standard	Product No. High Strength	Nom. length L mm	h_0 mm	h_a mm	b mm	Weight kg
Module 1.0 D = 10 mm	224 631 00	224 666 31**	500	9,0	10,0	6,0	0,28
	224 632 00	224 666 32**	1000	9,0	10,0	6,0	0,56
Module 1.0 D = 15 mm	225 631 00	-	500	14,0	15,0	7,5	0,66
	225 632 00	-	1000	14,0	15,0	7,5	1,35
Module 1.5 D = 15 mm	228 631 00	228 666 31	500	13,5	15,0	9,0	0,64
	228 632 00	228 666 32	1000	13,5	15,0	9,0	1,28
Module 1.5 D = 17 mm	229 631 00	-	500	15,5	17,0	9,6	0,84
	229 632 00	-	1000	15,5	17,0	9,6	1,70
Module 2.0 D = 20 mm	241 631 00	241 666 31	500	18,0	20,0	12,0	1,14
	241 632 00	241 666 32	1000	18,0	20,0	12,0	2,28
	241 634 00*	241 666 34	2000	18,0	20,0	12,0	4,52
Module 2.5 D = 25 mm	242 631 00	242 666 31	500	22,5	25,0	15,0	1,78
	242 632 00	242 666 32	1000	22,5	25,0	15,0	3,56
	242 634 00*	242 666 34	2000	22,5	25,0	15,0	7,20
Module 3.0 D = 30 mm	243 631 00	243 666 31	500	27,0	30,0	18,0	2,59
	243 632 00	243 666 32	1000	27,0	30,0	18,0	5,14
	243 634 00*	243 666 34	2000	27,0	30,0	18,0	10,28
Module 4.0 D = 40 mm	244 631 00	244 666 31	500	36,0	40,0	24,0	4,56
	244 632 00	244 666 32	1000	36,0	40,0	24,0	9,12
	244 634 00*	244 666 34	2000	36,0	40,0	24,0	18,24
Module 5.0 D = 50 mm	245 631 00	245 666 31	500	45,0	50,0	30,0	7,10
	245 632 00	245 666 32	1000	45,0	50,0	30,0	14,20
	245 634 00*	245 666 34	2000	45,0	50,0	30,0	28,40
Module 6.0 D = 60 mm	246 631 00	246 666 31	500	54,0	60,0	36,0	10,28
	246 632 00	246 666 32	1000	54,0	60,0	36,0	20,56
	246 634 00*	246 666 34	2000	54,0	60,0	36,0	41,12

* Material: C45K. ** Ø tolerance h9.

Racks length 250 mm from C45 (up to module 5) at www.maedler.de

Round Gear Racks Made From Stainless Steel, Milled Teeth, Straight Tooth System, Precisely Straightened

Material:
Stainless steel 1.4305.
Diameter tolerance h9 drawn.

STAINLESS

	Product No.	Nom. length L mm	h_0 mm	h_a mm	b mm	Weight kg
Module 1.0 D = 10 mm	224 996 31	500	9,0	10,0	6,0	0,28
	224 996 32	1000	9,0	10,0	6,0	0,56
Module 1.5 D = 15 mm	228 996 31	500	13,5	15,0	9,0	0,64
	228 996 32	1000	13,5	15,0	9,0	1,28
Module 2.0 D = 20 mm	241 996 31	500	18,0	20,0	12,0	1,14
	241 996 32	1000	18,0	20,0	12,0	2,28
	241 996 34	2000	18,0	20,0	12,0	4,56
Module 2.5 D = 25 mm	242 996 31	500	22,5	25,0	15,0	1,78
	242 996 32	1000	22,5	25,0	15,0	3,56
	242 996 34	2000	22,5	25,0	15,0	7,12
Module 3.0 D = 30 mm	243 996 31	500	27,0	30,0	18,0	2,59
	243 996 32	1000	27,0	30,0	18,0	5,14
	243 996 34	2000	27,5	30,0	18,0	10,28
Module 4.0 D = 40 mm	244 996 31	500	36,0	40,0	24,0	4,56
	244 996 32	1000	36,0	40,0	24,0	9,12
	244 996 34	2000	36,0	40,0	24,0	18,24

Gear Racks Made from Steel, Helical Toothed, Tempered, Teeth Milled

Material: high-quality, specially treated bright steel with approx. 900 N/mm² tensile strength.

Tooth quality 8e27.
Helical tooth system, right hand 19° 31′ 42″.
For continuous linking.

Matching left hand-toothed counterparts, to simplify the mounting, are available at cost.

Matching helical-toothed spur gears page 252.

Ordering Details: e.g.: Product No. 251 603 11, Gear Rack, Helical Toothed, Tempered, Module 2.0, 500 mm



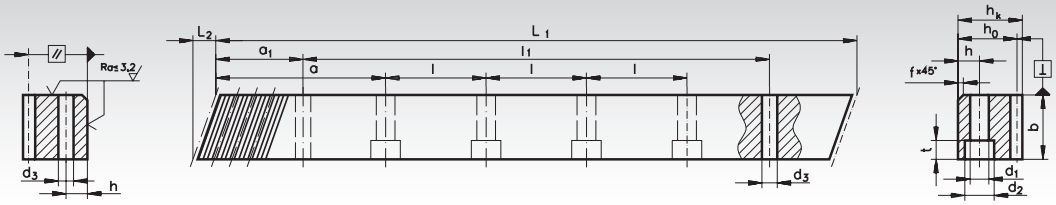

Module 2.0

Product No. with Bores	L_1	L_2	Number of teeth	b	h_k	h_0	f	a	l	No. of bores	h	d_1	d_2	t	a_1	l_1	d_3	GT_f /300[1)]	Fu*	Weight
	mm	mm		mm	mm	mm	mm	mm	mm		mm	mm	mm	mm	mm	mm	mm	mm	N	kg
251 603 11	500,00	8,9	75	25	24	22	2	62,50	125	4	8	7	11	7	31,7	436,6	5,7	0,044	2100	2,10
251 605 11	1000,00	8,9	150	25	24	22	2	62,50	125	8	8	7	11	7	31,7	936,6	5,7	0,044	2100	4,30
without Bores																				
251 603 10	500,00	8,9	75	25	24	22	2											0,044	2100	2,10
251 605 10	1000,00	8,9	150	25	24	22	2											0,044	2100	4,30
Counterpart for mounting																				
251 600 00	200,00	8,8	30	25	24	22														0,85

Module 3.0

Product No. with Bores	L_1	L_2	Number of teeth	b	h_k	h_0	f	a	l	No. of bores	h	d_1	d_2	t	a_1	l_1	d_3	GT_f /300[1)]	Fu*	Weight
	mm	mm		mm	mm	mm	mm	mm	mm		mm	mm	mm	mm	mm	mm	mm	mm	N	kg
253 603 11	500,00	10,6	50	30	29	26	2	62,50	125	4	9	10	15	9	35,0	430,0	7,7	0,046	4500	3,00
253 605 11	1000,00	10,6	100	30	29	26	2	62,50	125	8	9	10	15	9	35,0	930,0	7,7	0,046	4500	6,10
without Bores																				
253 603 10	500,00	10,6	50	30	29	26	2											0,046	4500	3,00
253 605 10	1000,00	10,6	100	30	29	26	2											0,046	4500	6,10
Counterpart for mounting																				
253 600 00	200,00	10,6	20	30	29	26														2,70

Module 4.0

Product No. with Bores	L_1	L_2	Number of teeth	b	h_k	h_0	f	a	l	No. of bores	h	d_1	d_2	t	a_1	l_1	d_3	GT_f /300[1)]	Fu*	Weight
	mm	mm		mm	mm	mm	mm	mm	mm		mm	mm	mm	mm	mm	mm	mm	mm	N	kg
254 603 11	506,67	14,2	38	40	39	35	2	62,50	125	4	12	10	15	9	33,3	433,0	7,7	0,048	8700	5,50
254 605 11	1000,00	14,2	75	40	39	35	2	62,50	125	8	12	10	15	9	33,3	933,4	7,7	0,048	8700	10,90
without Bores																				
254 603 10	506,67	14,2	38	40	39	35	2											0,048	8700	5,50
254 605 10	1000,00	14,2	75	40	39	35	2											0,048	8700	10,90
Counterpart for mounting																				
254 600 00	200,00	14,2	15	40	39	35														2,70

Module 5.0

Product No. with Bores	L_1	L_2	Number of teeth	b	h_k	h_0	f	a	l	No. of bores	h	d_1	d_2	t	a_1	l_1	d_3	GT_f /300[1)]	Fu*	Weight
	mm	mm		mm	mm	mm	mm	mm	mm		mm	mm	mm	mm	mm	mm	mm	mm	N	kg
255 603 11	500,00	17,4	30	50	39	34	3	62,50	125	4	12	14	20	13	37,5	425,0	11,7	0,050	15000	6,50
255 605 11	1000,00	17,4	60	50	39	34	3	62,50	125	8	12	14	20	13	37,5	925,0	11,7	0,050	15000	13,00
without Bores																				
255 603 10	500,00	17,4	30	50	39	34	3											0,050	15000	6,50
255 605 10	1000,00	17,4	60	50	39	34	3											0,050	15000	13,00
Counterpart for mounting																				
255 600 00	200,00	17,4	12	50	39	34														3,00

[1)] GTf /300 = total pitch error, i.e. the max. permissible deviation (per 300 mm) of the measured length of the rack compared to the theoretical length L300, with L300 = (m / cos ß) • π • z_{300}).

* Tangential force at tooth, calculated for a gear with 20 teeth. With a smaller number of teeth, the tangential force has to be reduced by 10%.

Precision Gear Racks Made from Steel, Helical Tooth System, Teeth Hardened and Ground

Material: 16MnCr5, Material-No. 1.7131, teeth induction hardened to about 60 HRC after hardening ground all around. As only the teeth are hardened subsequent drilling and pinning is easily possible.
As only the teeth are hardened subsequent drilling and pinning is easily possible. Tooth quality 6h25.
Helical tooth system, right hand 19° 31′ 42″.
For continuous linking.

Matching helical-toothed spur gears page 252.

Ordering Details: e.g.: Product No. 251 603 01, Gear Rack, Helical Tooth System, hardened, Teeth Ground, Module 2.0, 500 mm



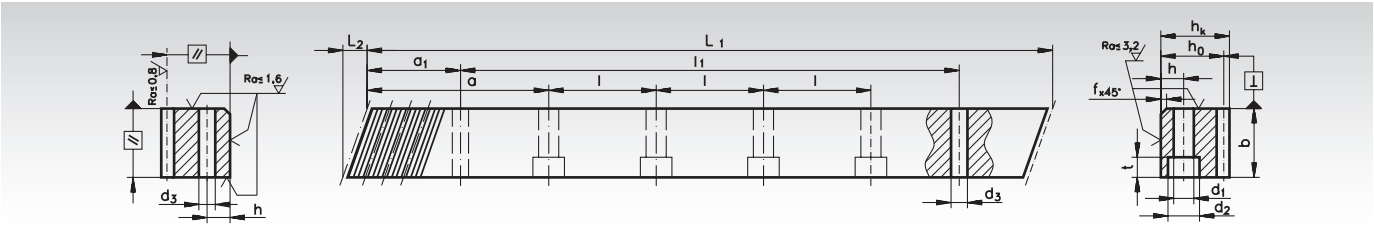

Module 2.0

Product No. with Bores	L_1	L_2	Number of teeth	b	h_k	h_0	f	a	l	No. of bores	h	d_1	d_2	t	a_1	l_1	d_3	GT_f /300[1)]	Fu*	Weight
	mm	mm		mm	mm	mm	mm	mm	mm		mm	mm	mm	mm	mm	mm	mm	mm	N	kg
251 603 01	500,00	8,5	75	24	24	22	2	62,50	125	4	8	7	11	7	31,7	436,6	5,7	0,022	8500	2,10
251 605 01	1000,00	8,5	150	24	24	22	2	62,50	125	8	8	7	11	7	31,7	936,6	5,7	0,022	8500	4,10
without Bores																				
251 603 00	500,00	8,5	75	24	24	22	2											0,022	8500	2,10
251 605 00	1000,00	8,5	150	24	24	22	2											0,022	8500	4,10
Counterpart for mounting																				
251 600 00	200,00	8,5	30	25	24	22														0,85

Module 3.0

Product No. with Bores	L_1	L_2	Number of teeth	b	h_k	h_0	f	a	l	No. of bores	h	d_1	d_2	t	a_1	l_1	d_3	GT_f /300[1)]	Fu*	Weight
	mm	mm		mm	mm	mm	mm	mm	mm		mm	mm	mm	mm	mm	mm	mm	mm	N	kg
253 603 01	500,00	10,3	50	29	29	26	2	62,50	125	4	9	10	15	9	35	430,0	7,7	0,024	15000	2,90
253 605 01	1000,00	10,3	100	29	29	26	2	62,50	125	8	9	10	15	9	35	930,0	7,7	0,024	15000	5,90
without Bores																				
253 603 00	500,00	10,3	50	29	29	26	2											0,024	15000	2,90
253 605 00	1000,00	10,3	100	29	29	26	2											0,024	15000	5,90
Counterpart for mounting																				
253 600 00	200,00	10,3	20	30	29	26														1,20

Module 4.0

Product No. with Bores	L_1	L_2	Number of teeth	b	h_k	h_0	f	a	l	No. of bores	h	d_1	d_2	t	a_1	l_1	d_3	GT_f /300[1)]	Fu*	Weight
	mm	mm		mm	mm	mm	mm	mm	mm		mm	mm	mm	mm	mm	mm	mm	mm	N	kg
254 603 01	506,67	13,8	38	39	39	35	3	62,50	125	4	12	10	15	9	33,3	433,0	7,7	0,024	25000	5,40
254 605 01	1000,00	13,8	75	39	39	35	3	62,50	125	8	12	10	15	9	33,3	933,4	7,7	0,024	25000	10,70
without Bores																				
254 603 00	506,67	13,8	38	39	39	35	3											0,024	25000	5,40
254 605 00	1000,00	13,8	75	39	39	35	3											0,024	25000	10,70
Counterpart for mounting																				
254 600 00	200,00	13,8	15	40	39	35														2,70

[1)] GTf /300 = total pitch error, i.e. the max. permissible deviation (per 300 mm) of the measured length of the rack compared to the theoretical length L300, with L300 = (m / cos ß) • π • z_{300}).

* Tangential force at tooth, calculated for a gear with 20 teeth. With a smaller number of teeth, the tangential force has to be reduced by 10%.



Reworking within 24h-service possible. Custom made parts on request.

Precision Gear Racks Made from Steel, Helical Toothed, Teeth Hardened and Ground

Material: C45K, Material-No. 1.0503, made from specially treated bright steel with approx. 650 N/mm² tensile strength. Teeth induction hardened to 50 to 55 HRC, after hardening ground all around. As only the teeth are hardened subsequent drilling and pinning is easily possible. Tooth quality 6h25.
Helical tooth system, right hand 19° 31′ 42″.
For continuous linking.

Matching helical-toothed spur gears page 252.



Ordering Details: e.g.: Product No. 255 603 01, Gear Rack, Helical Toothed, Hardened, Teeth Ground, Module 5.0, 500 mm

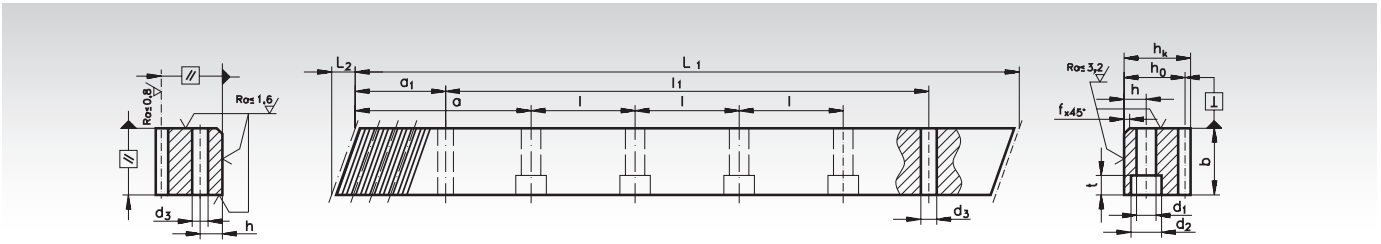

Module 5.0

Product No. with Bores	L_1	L_2	Number of teeth	b	h_k	h_0	f	a	l	No. of bores	h	d_1	d_2	t	a_1	l_1	d_3	GT_f /300[1)]	Fu*	Weight
	mm	mm		mm	mm	mm	mm	mm	mm		mm	mm	mm	mm	mm	mm	mm	mm	N	kg
255 603 01	500,00	17,4	30	49	39	34	3	62,50	125	4	12	14	20	13	37,5	425,0	11,7	0,025	32000	6,50
255 605 01	1000,00	17,4	60	49	39	34	3	62,50	125	8	12	14	20	13	37,5	925,0	11,7	0,025	32000	13,00
without Bores																				
255 603 00	500,00	17,4	30	49	39	34	3											0,025	32000	6,50
255 605 00	1000,00	17,4	60	49	39	34	3											0,025	32000	13,00
Counterpart for mounting																				
255 600 00	200,00	17,4	12	50	39	34												0,025	32000	3,00

[1)] GTf /300 = total pitch error, i.e. the max. permissible deviation (per 300 mm) of the measured length of the rack compared to the theoretical length L300, with L300 = (m / cos ß) • π • z_{300}).

* Tangential force at tooth, calculated for a gear with 20 teeth. With a smaller number of teeth, the tangential force has to be reduced by 10%.

Helical Tooth Spur Gears

Page 252





Reworking within 24h-service possible. Custom made parts on request.

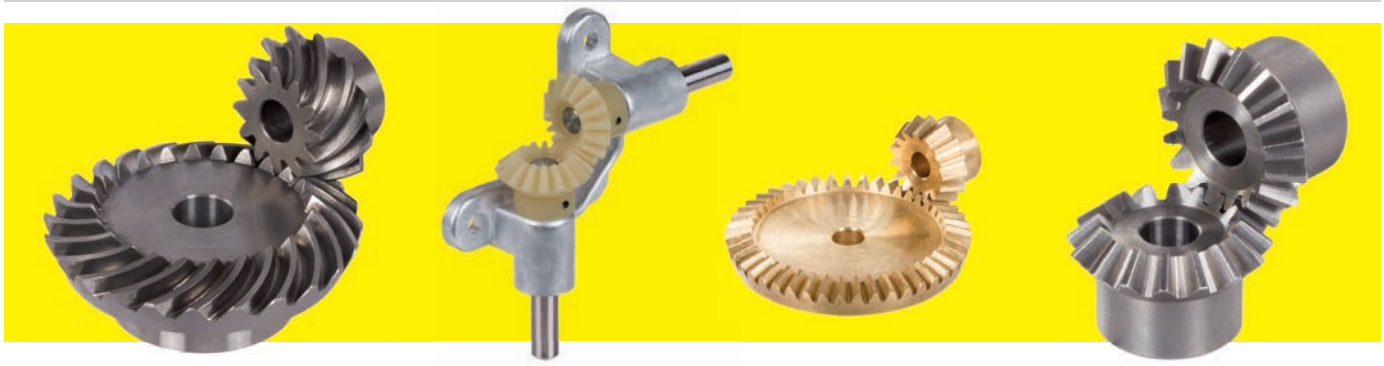

Contents

Material	Tooth System	Ratio	Module	perm. Output Torque	Page
Plastic resin	straight teeth	1:1	0,5 - 3,5	0,009 - 4,4 Nm	270
		as ready-to-install angular gear drive			271
		2:1	1 - 3	0,012 - 7,4 Nm	270
		3:1	1 - 2,5	0,083 - 1,8 Nm	270
		4:1	1 - 2	0,045 - 1,6 Nm	270
		5:1	1	0,6 Nm	270
Zinc die-cast	straight teeth	1:1	1 - 3,5	0,14 - 5,8 Nm	271
Brass	straight teeth	1:1	0,5 - 1	0,009 - 1,97 Nm	272
		1,5:1	0,5 - 1	0,036 - 0,27 Nm	272
		2:1	0,5 - 1	0,027 - 0,41 Nm	272
		2,5:1	0,5	0,075 Nm	272
		3:1	0,5 - 1	0,045 - 0,33 Nm	272
		4:1	1	0,49 Nm	272
Steel	straight teeth	1:1	0,5 - 8	0,011 - 181,6 Nm	273
		1,25:1	3 - 5	6,5 - 31,8 Nm	274
		1,5:1	0,5 - 5	0,021 - 90,9 Nm	274
		2:1	0,5 - 6	0,034 - 260 Nm	275
		2,5:1	0,5 - 5	0,018 - 152,5 Nm	276
		3:1	0,5 - 6	0,027 - 212 Nm	276
		3,5:1	1 - 4	0,445 - 86,5 Nm	277
		4:1	1 - 4	0,468 - 86,8 Nm	277
Stainless steel	straight teeth	1:1	1 - 4	0,06 - 4,8 Nm	278
STAINLESS		2:1	1 - 4	0,16 - 12 Nm	278
		3:1	1 - 4	0,30 - 28,2 Nm	278
		4:1	1 - 4	0,56 - 35,6 Nm	278
Steel hardned	spiral teeth	1:1	0,6 - 3,5	2,1 - 238 Nm	279
		1,24:1	1,5	17,1 Nm	280
		1,39:1	1,5	15,7 Nm	280
		1,5:1	0,6 - 3	3,3 - 215 Nm	280
		1,62:1	1	3,9 Nm	280
		2:1	0,6 - 3,5	4,6 - 394 Nm	281
		2,07:1	1	7,4 Nm	281
		2,5:1	0,6 - 3,5	6,5 - 315 Nm	281
		3:1	0,6 - 3,5	6,3 - 396 Nm	282
		4:1	1 - 1,5	31,2 - 45,2 Nm	282

General Basics about Bevel Gears

Bevel gears enable a non-slip power transmission between two shafts mounted at 90 degrees.
Available from stock are transmission ratios of 1:1 up to max. 1:5 (depending on the material used). Other than for spur gears, the module is not standardized, but is chosen with view to technical considerations. The module of the bevel gear is not a constant value, but it changes with the diameter.

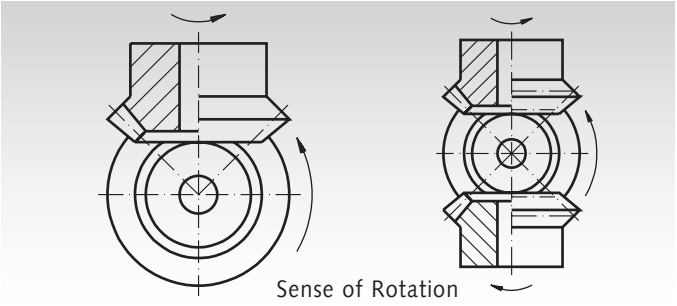

Bevel Gears with Straight-Tooth System

to be calculated	given unit	formula
Module = m	Pitch	$\frac{t}{\pi}$
	Pitch Ø and No. of Teeth	$\frac{d}{z}$
Pitch Ø = d	No. of Teeth and Module	$z \cdot m$
Pitch (Cone) Angle Gear 1 = δ_{01}	No. of Teeth Gear 1 and Gear 2	$\frac{z\,1}{z\,2} = \tan\ \delta\,01$
Pitch (Cone) Angle Gear 2 = δ_{02}	Angle of Axles and Pitch (Cone) Angle, Gear 1	$\delta a - \delta\,01$
Addendum Angle = χ_k	Pitch (Cone) Angle and No. of Teeth	$\frac{2 \cdot \sin\ \delta 0}{z} = \tan\ \chi_k$
	Module and Outer Cone Distance R_a	$\frac{m}{R_a} = \tan\ \chi_k$
Tip Ø = d_a	Pitch Ø, Pitch (Cone) Angle and Module	$d + (2m \cdot \cos\ \delta 0)$
	No. of Teeth, Pitch (Cone) Angle and Module	$z \cdot m + (2m \cdot \cos\ \delta 0)$
Tip (Cone) Angle = δ_k	Pitch (Cone) Angle and Addendum Angle	$\delta 0 + \chi_k$
Outer Cone Distance Cone Distance = R_a	Pitch (Cone) Diameter Ø and Pitch (Cone) Angle	$\frac{d}{2 \cdot \sin\ \delta 0}$
Gear 1 = big gear, Gear 2 = small gear		
Torque = Md in Nm	Power and Speed	Gear 1: $9550\,\frac{P}{n_1}$ Gear 2: $9550\,\frac{P}{n_2}$

Tooth Width maximum 0.4 x Outer Cone Distance R_a .
For Bevel Gears with a Shaft Angle larger or smaller than 90°, the following formula applies for the calculation of the Pitch (Cone) Angle

$$\frac{z\,2}{Z_1 \cdot \sin\ \delta_a} + \cot\ \delta_a = \cot\ \delta 01$$

Note: if δ_{01} is given, then $\delta_{k2} = \delta_a - (\delta_{01} - \chi_k)$
Addendum Angle is the same for both gears: $\chi_k = \chi_{k1} = \chi_{k2}$
Tangent = tan, Cotangent = cot

Material quality: information about the material quality can be found at each individual group of bevel gears.

Recommendations for the Lubrication of Bevel-Gear Sets

Peripheral speed	Lubrication	Lubricant
up to 1 m/s	Application of Lubricant	Adhesive Lubricant
up to 4 m/s	Splash Lubrication/Spray Lubrication	Grease or Adh. Lubricant
up to 15 m/s	Splash Lubrication	Oil
over 15 m/s	Pressure-Circulation or Spray Lubrication	Oil

Notes Regarding the Torque Values Stated

The load bearing capacity calculations for the bevel gears are based on the basic principles regarding the pitting resistance of the tooth flanks and the occurring tooth root stress. The calculations are based on the DIN 3991. For the calculation, the following assumptions were made:

If the transmission ratio is not 1 : 1 the stated max. torque applies to the smaller gear.

Calc. Factor/Determining Factor	Abbreviation	Value	Note
Calculation Method	-	-	DIN 3991
Normal Pressure Angle	-	20° (17.5° for spiral tooth system module 0.6 to 1.5)	
Spiral Angle	-	o° (38° for spiral tooth system)	
DIN Quality	-	8	-
Flank Safety	S_H	1.0 (apart from zinc)	Endurance strength 10.000 h (for steel)
Tooth-Root Safety	S_F	1.5	Endurance strength 10.000 h (for steel)
Application Factor	K_A	1.25	Industrial gear mechanisms, uniform, light shocks
Dynamics Factor	K_V	1.0	Usually without great influence
Load Distribution over Width	K_{Hbeta}	1.5 (1 for Polyacetal resin, Ms58 and ZnAl 4 Cu1)	Double-sided support
Lubricant/Surface Structure Speed Factor	$Z_L * Z_V * Z_R$	1	• sufficient oil lubrication • relative surface roughness $R_{Z100} = 10$ • peripheral speed 8 m/s
Lifetime Factor	Z_N	1	Endurance strength 10.000 h (for steel)
Operating temperature for plastic gears	T_{Betr}	up to 60°C	The material parametres of plastic gears highly depend on the temperature

The load bearing capacity of a bevel gear depends on various different factors. The torques stated are only reference values serving to facilitate the selection process. If necessary a specific calculation of strength and load bearing capacity must be carried out for each application.

Depending on the operating conditions the wear lifespan may be influenced by adequate grease/oil lubrication. Please also note that insufficient lubrication may lead to scuffing of the gear flanks.

IMPORTANT

Please make sure you always check the permissible torque separately for the pinion and the gear side!
Plastic gears are, due to the higher elasticity, calculated with a K_{Hbeta} of 1. Gears made from brass and zinc-die-cast are also calculated with a K_{Hbeta} of 1, as a good running-in characteristic is assumed for these materials.

In the torque calculation of zinc-die-cast bevel gears only the root strength was considered. Due to the material properties these gears are only to a limited extend suitable for continuous operation.

For the materials used, the following characteristic values were taken as basis:

Material	Perm. Pulsating Fatigue Strength under Bending Stress s_{bW} in N/mm²	Perm. Flank Pressure U_{Hlim} in N/mm²
Polyacetal resin	28 (VDI-2545)	40 (VDI-2545)
ZnAl4Cu1	60	150
Ms58 (2.0401)	100	250
11SMnPb30 (alt: 9SMn28K)	150	350
C45 normalized	200	590
42CrMo4 hardened	350	1360
16MnCr5 case hardened	400	1630
X10CrNiS18 9 (1.4305, stainless, austenitic)	200	400

Bevel Gears Made from Plastic, Straight-Tooth System, Ratio 1:1 to 5:1

Material: Polyacetal, nature white or polyketone (PK), nature, ivory-colored.
Shaft angle 90°. Version: injection-moulded.
Bores from Module 1.5 machined.
Polyacetal: Standard quality with high hardness.
Polyketone: Lower friction leads to much larger lifespan, even without lubrication. Much higher safety against tooth breaking, specially at longterm usage. Temperature Range: -40°C to +140°C due to the load. Material properties see page 821. **The bevel gears are also available with smaller bores, or with keyway.**

Ordering Details: e.g.:
1 Pair of Bevel Gears Ratio 1:1 Mod. 0.5 16 Teeth = 2 Piece Product No. 355 207 00.
1 Pair of Bevel Gears Ratio 2:1 Mod. 1 15/30 Teeth = 1 Piece Product No. 355 556 00 and 1 Piece 355 557 00.

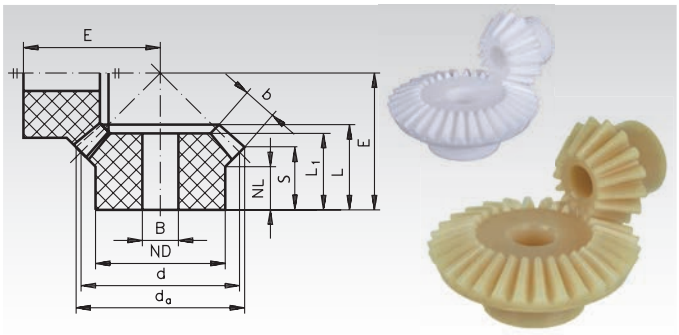

Drawing: Ratio 1:1, photo: ratio 2:1

Ratio 1:1

Product No. Polyacetal	Product No. Polyketone	Module	Number of teeth	d_a mm	d mm	ND mm	NL mm	L_1 mm	L mm	b mm	B mm	E mm	S mm	Torque* [Ncm] Polyacetal	Torque* [Ncm] Polycetone	Weight [g] Polyacetal	Weight [g] Polycetone
355 207 00	**355 207 01**	0,5	16	8,7	8	7	6	8	8	2	3	10,5	6,6	0,9	0,95	0,3	0,27
355 507 00	**355 507 01**	1	16	17,6	16	12	8	13,6	13,6	4,7	5	18,4	10,6	8,3	8,7	2,0	1,8
355 520 00	**355 520 01**	1	30	31,4	30	15	7,4	12,9	15,3	7,4	6	24,8	10,8	58	61	6,0	5,4
355 707 00	**355 707 01**	1,5	16	26,4	24	18,5	10	16,2	18,4	7	8	25,8	14,4	29	31	6,0	5,4
356 007 00	**356 007 01**	2	16	34,9	32	21,9	9,6	18,3	21,2	10	10	30,4	14,9	73	77	10,8	9,7
356 107 00	**356 107 01**	2,5	16	43,5	40	25,2	11,5	22,9	25,5	12,3	12	37	18,2	145	152	20,0	17,9
356 407 00	**356 407 01**	3	16	52,3	48	28,8	13,2	25,8	29,2	13,8	14	43	20,6	250	263	31,0	27,8
356 507 00	**356 507 01**	3,5	16	61,4	56	33,3	14,4	28,1	33,1	15,8	18	49,5	22,8	440	462	47,0	42,2

Ratio 1.5:1

Product No. Polyacetal	Product No. Polyketone	Module	Number of teeth	d_a mm	d mm	ND mm	NL mm	L_1 mm	L mm	b mm	B mm	E mm	S mm	Torque* [Ncm] Polyacetal	Torque* [Ncm] Polycetone	Weight [g] Polyacetal	Weight [g] Polycetone
355 748 00	**355 748 01**	1,5	16	26	24	20	10,8	17,8	18,8	8	8	30	12,5	36	38	6,6	6,5
355 749 00	**355 749 01**	1,5	24	37	36	24	11,3	18	19,5	8	10	26,6	15,0	54	57	11,6	10,4

Ratio 2:1

Product No. Polyacetal	Product No. Polyketone	Module	Number of teeth	d_a mm	d mm	ND mm	NL mm	L_1 mm	L mm	b mm	B mm	E mm	S mm	Torque* [Ncm] Polyacetal	Torque* [Ncm] Polycetone	Weight [g] Polyacetal	Weight [g] Polycetone
355 556 00	**355 556 01**	1	15	16,8	15	12,2	10,6	17	17	6,6	5	26,4	11,5	12	12,6	2,4	2,2
355 557 00	**355 557 01**	1	30	31,1	30	18	9,1	14,8	16,2	6,6	8	20,9	13,6	24	25	7,0	6,3
355 756 00	**355 756 01**	1,5	15	25,4	22,5	17	11,5	22,8	22,8	10,5	8	35,8	13,8	43	45	7,5	6,7
355 757 00	**355 757 01**	1,5	30	46,4	45	23,4	9,6	17,5	19,5	10,5	10	26,2	15,0	86	90	18,0	16,2
356 056 00	**356 056 01**	2	15	33,6	30	22,5	11,8	26	27	14,6	10	44,2	14,5	107	112	13,3	11,9
356 057 00	**356 057 01**	2	30	62,2	60	30,2	11,8	22,6	24,2	14,6	12	32,6	18,5	214	225	42,0	37,7
356 156 00	**356 156 01**	2,5	15	42	37,5	26,5	13	29,6	31,2	17,3	12	53,3	16,4	209	220	23,6	21,2
356 157 00	**356 157 01**	2,5	30	77,3	75	36,1	15	27,5	29,5	17,3	16	40,5	22,8	418	439	77,0	69,1
356 456 00	**356 456 01**	3	15	50,3	45	31,2	14,8	35	36,3	20,5	14	63,3	19,0	370	389	38,0	34,1
356 457 00	**356 457 01**	3	30	93	90	45	19	34,2	37	20,5	18	49,5	29,2	740	777	136,0	122,0

Ratio 3:1

Product No. Polyacetal	Product No. Polyketone	Module	Number of teeth	d_a mm	d mm	ND mm	NL mm	L_1 mm	L mm	b mm	B mm	E mm	S mm	Torque* [Ncm] Polyacetal	Torque* [Ncm] Polycetone	Weight [g] Polyacetal	Weight [g] Polycetone
355 576 00	**355 576 01**	1	15	16,6	15	12,3	11	20,4	20,4	9,2	5	34,3	12,1	16	16,8	2,8	2,5
355 577 00	**355 577 01**	1	45	46,1	45	23,4	9,6	16,5	18,2	9,2	10	22,7	15,7	48	50	17,5	15,7
355 776 00	**355 776 01**	1,5	15	25,1	22,5	17,2	12,5	26,8	26,8	14	8	47,9	13,5	64	67	7,6	6,8
355 777 00	**355 777 01**	1,5	45	68,8	67,5	30,4	11,5	21,5	23	14	12	29,4	19,2	192	202	50,5	45,3
356 074 00	**356 074 01**	2	10	24,0	20	15,6	12	25,0	25	12,5	6	43,7	13,2	30	32	6,0	5,4
356 075 00	**356 075 01**	2	30	61,7	60	30,3	11,5	20,2	22,5	12,5	12	28	19,0	90	95	38,0	34,1
356 174 00	**356 174 01**	2,5	10	29,7	25	18,8	13	28,8	28,8	15,7	8	52,4	14,1	60	63	10,2	9,2
356 175 00	**356 175 01**	2,5	30	77,2	75	36,1	15,5	25,2	29	15,7	18	35,7	24,1	180	189	67,5	60,6

Ratio 4:1

Product No. Polyacetal	Product No. Polyketone	Module	Number of teeth	d_a mm	d mm	ND mm	NL mm	L_1 mm	L mm	b mm	B mm	E mm	S mm	Torque* [Ncm] Polyacetal	Torque* [Ncm] Polycetone	Weight [g] Polyacetal	Weight [g] Polycetone
355 588 00	**355 588 01**	1	10	12	10	7,8	9,3	17,7	17,7	8,2	4	30,1	10,1	4,5	4,7	0,9	0,8
355 589 00	**355 589 01**	1	40	40,8	40	23,4	10,8	15,7	17	8,2	10	20,1	15,1	18	19	12,6	11,3
355 788 00	**355 788 01**	1,5	10	18	15	11,3	10,9	23,5	23,5	12,3	5	41,7	11,7	17	18	3,0	2,7
355 789 00	**355 789 01**	1,5	40	61,2	60	30,4	12,8	20	21,7	12,3	12	26,2	18,6	68	71	32,0	28,7
356 088 00	**356 088 01**	2	10	23,8	20	14,3	12,8	28,9	28,9	16,3	6	54	13,2	40	42	6,2	5,6
356 089 00	**356 089 01**	2	40	81,5	80	36	16,6	24,7	27	16,3	18	32,5	23,1	160	168	62,0	55,6

Ratio 5:1

Product No. Polyacetal	Product No. Polyketone	Module	Number of teeth	d_a mm	d mm	ND mm	NL mm	L_1 mm	L mm	b mm	B mm	E mm	S mm	Torque* [Ncm] Polyacetal	Torque* [Ncm] Polycetone	Weight [g] Polyacetal	Weight [g] Polycetone
355 598 00	**355 598 01**	1	12	13,7	12	9,5	10	20,3	20,3	9,5	4	40,5	10,5	12	12,6	1,6	1,4
355 599 00	**355 599 01**	1	60	60,4	60	20,5	11	15,5	17,4	9,5	10	21	15,4	60	63	20,0	17,9

*Basis for calculations see page 269.

Angular Drive with Plastic Bevel Gears, Ratio 1:1

Material: Housing made from zinc die-cast ZnAl4Cu1.
Shafts made from stainless steel 1.4301, dismountable.
Bevel gears from polyacetal or polyketone resin, injection-moulded.

- Low cost angular gear drive, ratio 1:1, 6 sizes.
- Suitable for lower torques and intermittend use.
- Shafts running directly in the self-lubricating housing material.
- Easy to mount and maintenance-free.

Polyacetal: Standard quality with high hardness.
Polyketone: Lower friction,much larger lifespan. Much higher safety against tooth breaking. Shaft angle = 90°. Temperature range - 20°C to +100° C.

Ordering details: e.g.:
Art.-Nr. 410 355 10, Angular drive with polyacetal bevel gears, shaft-Ø d=5mm

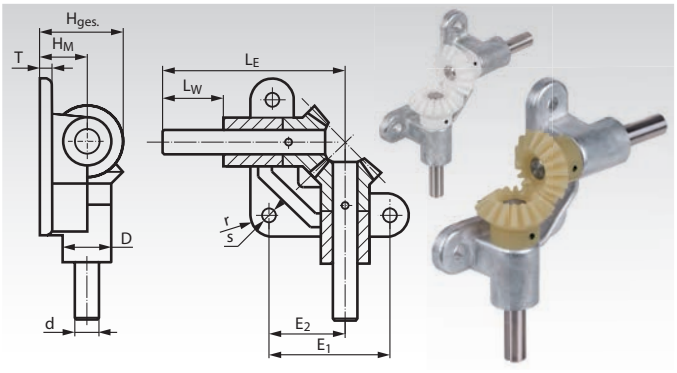

Ratio 1:1

Product No. Polyacetal	Product No. Polyketone	d mm	D mm	E_1 mm	E_2 mm	H_{Ges} mm	H_M mm	L_E mm	L_W mm	r mm	s mm	T mm	Module mm	Number of teeth	$T_{max.}$* Polyacetal Ncm	$T_{max.}$* Polyketone Ncm	Weight g
410 355 10	**410 356 10**	5^{h9}	12	32	19,4	18,8	10	50	15	6	4,8	4	1,0	16/16	8,3	8,7	60
410 355 15	**410 356 15**	8^{h9}	18	45	28,4	28,2	15	70	20	9	5,8	5	1,5	16/16	29	31	180
410 355 20	**410 356 20**	10^{h6}	22	55	35,0	37,5	20	90	30	11	7,0	6	2,0	16/16	73	77	320
410 355 25	**410 356 25**	12^{h6}	25	65	41,0	46,8	25	105	35	12,5	9,0	7	2,5	16/16	145	152	480
410 355 30	**410 356 30**	15^{h6}	30	75	47,5	56,2	30	120	40	15	9,0	8	3,0	16/16	250	263	760
410 355 35	**410 356 35**	18^{h6}	33	85	54,0	65,7	35	135	45	16	11,0	9	3,5	16/16	440	462	1080

*Basis for calculations see page 269.

Bevel gears Made from Zinc Die-Cast, Straight-Tooth System, Ratio 1:1

Material: ZnAl4Cu1.

Shaft angle = 90°.
Bores machined.

Zinc-die-cast gears under load should not be used at operating temperatures higher than 100°C.

The bevel gears only run as a pair at same module.

Ordering Details: e.g.:
1 Pair of Bevel Gears Ratio 1:1 Mod. 1 16 Teeth = 2 Pieces Product No. 358 507 00

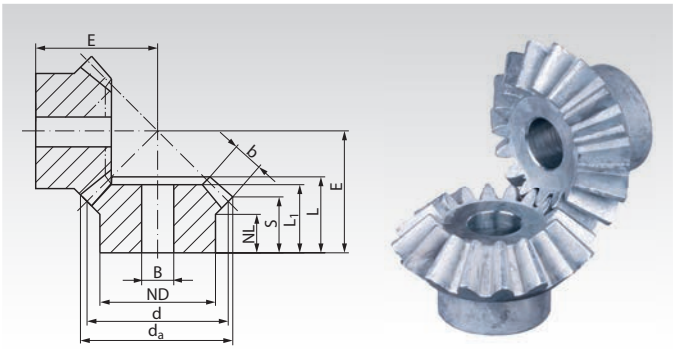

Ratio 1:1

Product No.	Module	Number of teeth	d_a mm	d mm	ND mm	NL mm	L_1 mm	L mm	b mm	B^{H9} mm	E mm	S mm	Torque* Ncm	Weight g
358 507 00	1	16	17,5	16	12	7,5	13,0	13,0	4,5	6	17,9	10,5	14	7
358 707 00	1,5	16	26,0	24	19	10,7	17,0	18,6	6,9	8	25,5	14,5	46	27
359 007 00	2	16	34,6	32	23	10	19,2	21,3	9,6	10	30,0	15,1	110	52
359 107 00	2,5	16	43,3	40	26	12	23,0	25,5	12,3	12	36,2	17,6	230	88
359 407 00	3	16	52,3	48	30	13	26,0	29,3	14,0	14	42,5	20,6	380	146
359 507 00	3,5	16	61,4	56	34	14	29,2	33,2	15,5	16	49,4	23,2	580	228

* In the torque calculation of zinc-die-cast bevel gears only the root strength was considered.
Due to the material properties these gears are only to a limited extend suitable for continuous operation.



Reworking within 24h-service possible. Custom made parts on request.

Bevel Gears Made from Brass, Straight-Tooth System, Ratio 1:1 to 4:1

Material: Ms58 (2.0401).

Milled teeth. Shaft angle = 90°.

The bevel gears only run as a pair at the stated ratio and same module.

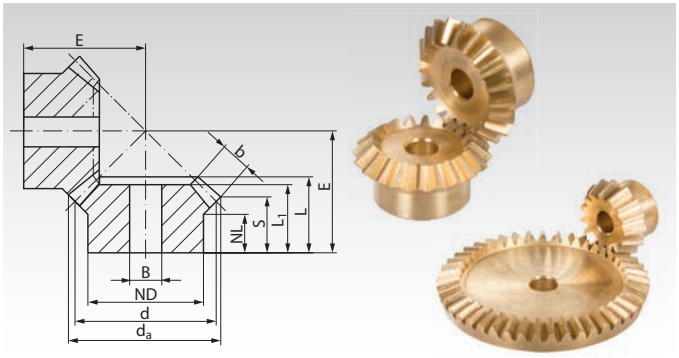

Ordering Details: e.g.:
1 Pair of Bevel Gears Ratio 1:1 Mod. 0.5 15 teeth = 2 pieces Product No. 350 206 00.
1 Pair of Bevel Gears Ratio 1.5:1 Mod. 0.5 20/30 Teeth = 1 Piece Product No. 350 252 00 and 1 Piece 350 253 00.

Ratio 1:1

Product No.	Module	Number of teeth	d_a mm	d mm	ND mm	NL mm	L_1 mm	L mm	S mm	b mm	B^{H7} mm	E mm	Torque* Ncm	Weight g
350 206 00	0,5	15	8,2	7,5	6	5	6,3	7,3	6,1	2	3	9,5	0,9	1
350 211 00	0,5	20	10,7	10	8	4	-	7	5	3	4	9,7	1,9	1
350 215 00	0,5	24	12,7	12	8	4	6,4	7	5	3	4	10,7	3,0	3
350 220 00	0,5	30	15,7	15	10	4	7,5	8,5	6,6	3	4	13,7	5,3	4
350 223 00	0,5	36	18,7	18	12	5	9	10,1	8	3	4	16,7	8,2	10
350 226 00	0,5	40	20,7	20	12	5	8,5	9,5	7,5	3	4	17,1	10,6	10
350 232 00	0,5	50	25,7	25	14	5	8,5	9,5	7,5	3	4	19,6	18,0	16
350 503 00	1	12	13,0	12	8	5	8,5	9,6	7,7	3	5	13,2	5,0	3
350 507 00	1	16	17,4	16	12	5	9	10,3	7,8	4	5	15,1	6,0	9
350 511 00	1	20	21,4	20	15	5	9	10,4	7,8	4	5	17,1	13,0	15
350 516 00	1	25	26,4	25	16	6,7	11,5	13	9,7	5	5	21,5	26,0	26
350 520 00	1	30	31,4	30	16	7	11,5	13,1	9,7	5	5	24,0	40,0	33
350 523 00	1	36	37,4	36	16	7	11,5	13	9,6	5	5	26,9	62,0	43
350 526 00	1	40	41,4	40	16	8	12,5	14	10,6	5	5	29,9	79,0	53
350 532 00	1	50	51,4	50	16	8	12,5	14	10,6	5	6	34,9	130,0	76
350 535 00	1	60	61,4	60	16	8	12,5	14,1	10,6	5	6	39,9	197,0	110

Ratio 1.5:1

Product No.	Module	Number of teeth	d_a mm	d mm	ND mm	NL mm	L_1 mm	L mm	S mm	b mm	B^{H7} mm	E mm	Torque* Ncm	Weight g
350 252 00	0,5	20	11,0	10	8	3,5	6,5	7,1	4,7	3	4	11,9	2,4	2
350 253 00	0,5	30	15,4	15	10	4	6	7	5,4	3	4	10,1	3,6	4
350 552 00	1	20	22,1	20	15	5	10	11,1	7,2	5	5	21,5	18,0	16
350 553 00	1	30	30,8	30	16	5	9	10,9	8,3	5	5	17,7	27,0	28

Ratio 2:1

Product No.	Module	Number of teeth	d_a mm	d mm	ND mm	NL mm	L_1 mm	L mm	S mm	b mm	B^{H7} mm	E mm	Torque* Ncm	Weight g
350 260 00	0,5	20	11,2	10	8	4	7	7,5	5,0	3	4	14,65	2,7	2
350 261 00	0,5	40	20,3	20	12	5	7,5	8,4	7,1	3	4	11,83	5,4	8
350 556 00	1	15	17,4	15	12,5	4,5	9	10,1	5,8	5	5	20,2	9,4	9
350 557 00	1	30	30,6	30	16	5	9	10,8	8,8	5	5	15,7	18,8	27
350 560 00	1	20	22,4	20	15	5	10	11,1	6,8	5	5	26,2	20,6	17
350 561 00	1	40	40,6	40	16	8	12	13,8	11,7	5	6	21,1	41,2	50

Ratio 2.5:1

Product No.	Module	Number of teeth	d_a mm	d mm	ND mm	NL mm	L_1 mm	L mm	S mm	b mm	B^{H7} mm	E mm	Torque* Ncm	Weight g
350 272 00	0,5	20	11,3	10	8	4	7	7,6	4,9	3	4	17,1	3,0	3
350 273 00	0,5	50	25,2	25	14	5	7	7,8	6,8	3	4	11,5	7,5	12

Ratio 3:1

Product No.	Module	Number of teeth	d_a mm	d mm	ND mm	NL mm	L_1 mm	L mm	S mm	b mm	B^{H7} mm	E mm	Torque* Ncm	Weight g
350 276 00	0,5	15	8,8	7,5	6	3,7	6,5	7	4,3	3	3	15,3	1,5	1
350 277 00	0,5	45	22,7	22,5	12	5	7,5	8,4	7,5	3	4	11,0	4,5	11
350 576 00	1	15	17,7	15	13	5	10	11,1	6,5	5	5	28,5	11,0	10
350 577 00	1	45	45,4	45	16	8	12,5	14,7	13,2	5	6	20,2	33,0	68

Ratio 4:1

Product No.	Module	Number of teeth	d_a mm	d mm	ND mm	NL mm	L_1 mm	L mm	S mm	b mm	B^{H7} mm	E mm	Torque* Ncm	Weight g
350 592 00	1	15	17,8	15	13	5,5	10	11	6,3	5	5	35,9	12,2	10
350 593 00	1	60	60,3	60	16	8	12,5	14,6	13,6	5	6	20,5	48,8	110

* Basis for calculations see page 269.

Bevel gears Made from Steel, Straight-Tooth System, Ratio 1:1

Material: up to module 2: 11SMnPb30.
from module 2.5: C45.

Tooth quality 8 modelled on DIN 3967 (from module 2).
Up to module 5 with crowned, milled teeth.
From module 6 with planed teeth. Not hardened – not lapped.

Shaft angle = 90°.

The bevel gears only run as a pair at the stated ratio and at the same module.

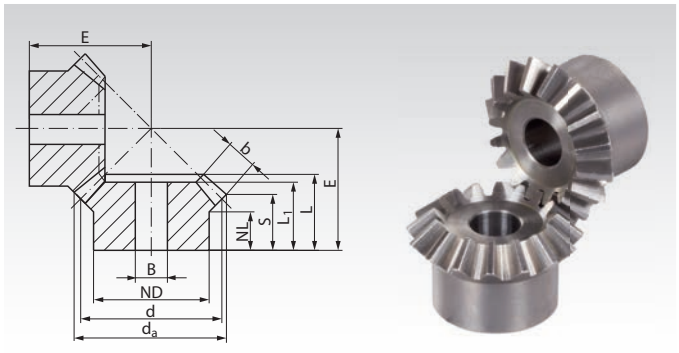

Ordering Details: e.g.:
1 Pair of Bevel Gears Ratio 1:1 Mod. 0.5 20 Teeth = 2 Pieces Product No. 360 211 00

Ratio 1:1

Product No.	Module	Number of teeth	d_a mm	d mm	ND mm	NL mm	L_1 mm	L mm	S mm	b mm	B^{H7} mm	E mm	Torque* Nm	Weight g
360 211 00	0,5	20	10,7	10	8	4	-	7,0	5,0	3	4	9,7	0,011	1
360 215 00	0,5	24	12,7	12	8	4	6,4	7,0	5,0	3	4	10,7	0,018	3
360 220 00	0,5	30	15,7	15	10	4	7,5	8,5	6,6	3	4	13,7	0,032	4
360 223 00	0,5	36	18,7	18	12	5	9,0	10,1	8,0	3	4	16,7	0,050	10
360 226 00	0,5	40	20,7	20	12	5	8,5	9,5	7,5	3	4	17,1	0,064	10
360 232 00	0,5	50	25,7	25	14	5	8,5	9,5	7,5	3	4	19,6	0,108	16
360 507 00	1	16	17,4	16	14	7	10	11,2	8,7	4	5	16	0,052	9
360 510 00	1	19	20,4	19	15	6,5	10	11,8	9,2	4	5	18	0,085	14
360 513 00	1	22	23,4	22	18	7	11	12,8	9,7	4,7	5	20	0,158	22
360 518 00	1	26	27,4	26	22	7	12	13,4	9,7	5,5	5	22	0,193	35
360 520 00	1	30	31,4	30	22	7	14	16,0	11,7	6,4	5	26	0,29	50
360 526 00	1	40	41,4	40	30	10	18	19,8	15,7	6,0	8	35	0,55	111
360 707 00	1,5	16	26,1	24	20	11	15	17,3	14,1	5,1	8	25	0,18	32
360 711 00	1,5	20	32,1	30	22	9	15	17,2	13,1	6,4	8	27	0,34	47
360 713 00	1,5	22	35,1	33	20	8	15	17,1	12,6	7,0	8	28	0,44	50
360 716 00	1,5	25	39,6	37,5	25	8	15	17,6	12,3	8,0	10	30	0,62	70
360 720 00	1,5	30	47,1	45	30	12	20	21,9	15,6	9,6	10	37	1,01	135
360 726 00	1,5	40	62,1	60	40	12	25	27,7	19,1	12,7	15	48	2,46	310
361 007 00	2	16	34,8	32	25	11,5	18	20,7	16,4	6,8	10	31	0,45	66
361 011 00	2	20	42,8	40	30	10	17	19,9	14,4	8,5	10	33	0,84	104
361 013 00	2	22	46,8	44	30	10	19	21,0	15,4	9,3	10	36	1,08	130
361 016 00	2	25	52,8	50	35	8	19	21,4	14,4	10,6	10	38	1,50	182
361 020 00	2	30	62,8	60	40	12	25	26,9	18,4	12,7	15	47	2,45	306
361 026 00	2	40	82,8	80	50	15	31	33,7	23,4	15,2	20	62	16,3	660
361 107 00	2,5	16	43,7	40	30	10	21	23,8	16,8	11	10	35	2,6	120
361 109 00	2,5	18	48,7	45	30	10	22	25,0	17,4	12	10	38	3,6	150
361 111 00	2,5	20	53,7	50	35	10	22	25,9	16,9	14	10	40	4,9	210
361 113 00	2,5	22	58,7	55	30	10	24	27,1	17,3	15	10	43	6,3	240
361 116 00	2,5	25	66,2	62,5	45	10	25	28,8	17,6	17	15	47	9,3	370
361 120 00	2,5	30	78,7	75	50	12	29	32,7	19,3	20	15	55	16,3	560
361 126 00	2,5	40	103,6	100	60	14	31	35,4	21,8	20	25	70	33,6	1100
361 407 00	3	16	52,4	48	40	12	24	27,7	18,2	15	10	40	4,6	240
361 409 00	3	18	58,4	54	40	10	25	28,1	17,2	17	10	42	6,4	280
361 411 00	3	20	64,4	60	40	10	26	29,5	17,2	19	15	45	8,7	320
361 413 00	3	22	70,4	66	40	8	27	30,2	17,2	20	15	48	11,6	410
361 416 00	3	25	79,4	75	50	10	28	31,9	16,7	23	15	52	17,3	490
361 420 00	3	30	94,4	90	50	12	35	38,8	22,2	25	20	65	29,2	950
361 426 00	3	40	124,4	120	60	15	35	39,1	22,2	25	25	80	60,7	1600
361 807 00	4	16	70,0	64	50	11	29	32,9	21,0	19	20	50	11,1	420
361 809 00	4	18	78,0	72	50	16	36	41,0	27,0	22	20	60	15,6	640
361 811 00	4	20	85,9	80	50	16	39	43,5	28,0	24	20	65	20,8	810
361 813 00	4	22	93,9	88	50	12	37	40,9	24,0	26	20	65	27,9	940
361 816 00	4	25	105,9	100	60	12	38	42,7	23,0	30	20	70	41,9	1400
361 820 00	4	30	125,9	120	60	18	42	47,9	27,9	30	25	85	67,5	2000
361 826 00	4	40	165,8	160	80	20	48	53,2	32,9	30	30	110	138,0	4200
362 107 00	5	16	87,4	80	60	12	36	41,5	25,7	25	20	62	22,2	860
362 109 00	5	18	97,4	90	60	12	37	42,2	23,7	29	20	65	30,7	1050
362 111 00	5	20	107,4	100	60	12	39	44,4	23,7	32	25	70	42,7	1300
362 113 00	5	22	117,5	110	70	12	43	48,5	25,7	35	25	77	57,5	1840
362 116 00	5	25	132,4	125	70	12	42	47,5	21,2	40	30	80	85,8	2140
362 120 00	5	30	157,4	150	70	12	44	51,3	24,7	40	30	96	139,5	3520
362 126 00	5	40	207,3	200	90	20	52	60	32,9	40	35	128,1	288,0	7060
367 309 00	6	18	116,5	108	60	15	44	54	31,3	35	25	81,0	54,8	1770
367 311 00	6	20	128,5	120	70	15	44	54	27,8	40	30	83,4	76,3	2190
367 316 00	6	25	158,5	150	75	15	51	60	26,7	50	30	97,3	153,4	3790
367 320 00	6	30	188,5	180	90	15	51	60	26,4	50	35	112,1	250,6	5810
367 326 00	6	40	248,5	240	100	20	58	67	32,9	50	40	148,6	555,0	11600
367 711 00	8	20	171,3	160	90	15	52	62	29,20	50	40	103,3	181,6	4560

* Basis for calculations see page 269.

Bevel Gears Made from Steel, Straight-Tooth System, Ratio 1.25:1 and 1.5:1

Material: up to module 2: 11SMnPb30.
from module 2.5: C45.

Tooth quality 8 modelled on DIN 3967 (from module 2). With crowned, milled teeth. Not hardened – not lapped.

Shaft angle = 90°.

The bevel gears only run as a pair at the stated ratio and at the same module.

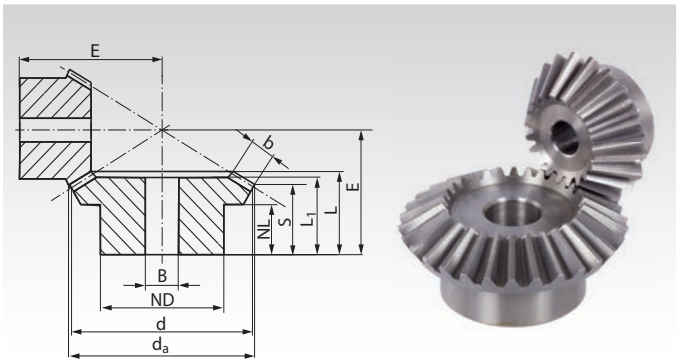

Ordering Details: e.g.:
1 Pair of Bevel Gears Ratio 1.25:1 Mod. 3 16/20 Teeth =
1 Piece Product No. 361 444 00 and
1 Piece Product No. 361 445 00

Ratio 1.25:1

Product No.	Module	Number of teeth	d_a mm	d mm	ND mm	NL mm	L_1 mm	L mm	S mm	b mm	B^{H7} mm	E mm	Torque* Nm	Weight g
361 444 00	3	16	52,9	48	40	11,7	27	29,2	16,9	17	15	45	5,2	220
361 445 00	3	20	63,9	60	40	10,0	25	27,8	18,4	17	15	40	6,5	300
361 844 00	4	16	70,6	64	50	12,5	32	36,5	20,6	22	20	58	12,7	470
361 845 00	4	20	85,2	80	50	15,0	33	38,4	26,3	22	20	55	15,9	700
362 144 00	5	16	88,2	80	60	12,0	40	44,2	23,3	29	20	70	25,4	910
362 145 00	5	20	106,6	100	60	15,0	39	45,0	29,1	29	25	65	31,8	1300

Ratio 1.5:1

Product No.	Module	Number of teeth	d_a mm	d mm	ND mm	NL mm	L_1 mm	L mm	S mm	b mm	B^{H7} mm	E mm	Torque* Nm	Weight g
360 252 00	0,5	20	11,0	10	8	3,5	6,5	7,1	4,7	3	4	11,9	0,014	2
360 253 00	0,5	30	15,4	15	10	4,0	6,0	7,0	5,4	3	4	10,1	0,021	4
360 548 00	1	16	18,1	16	13	6,9	11	12,0	8,7	4,3	5	20	0,066	10
360 549 00	1	24	24,8	24	20	8,8	13	14,8	12,6	4,3	5	20	0,099	32
360 748 00	1,5	16	27,1	24	20	8,7	14	16,1	11,0	6,5	8	28	0,023	34
360 749 00	1,5	24	37,2	36	20	12,0	17	20,2	16,9	6,5	10	28	0,035	55
360 752 00	1,5	20	33,1	30	20	9,0	17	18,9	12,5	8,1	8	34	0,43	52
360 753 00	1,5	30	46,2	45	30	12,0	20	22,1	17,9	8,1	10	32	0,65	133
361 048 00	2	16	35,5	32	20	8,0	21	22,6	13,1	12	10	36	0,57	60
361 049 00	2	24	50,3	48	30	8,0	18	21,5	15,7	12	10	30	0,86	151
361 052 00	2	20	43,5	40	30	7,5	20	22,3	11,2	14	10	40	1,15	119
361 053 00	2	30	62,3	60	40	15,0	25	28,7	21,7	14	15	40	1,73	301
361 148 00	2,5	16	44,3	40	30	11,6	26	28,2	16,4	14	10	45	3,3	150
361 149 00	2,5	24	62,9	60	30	12,0	26	29,4	22,1	14	10	40	5,0	300
361 152 00	2,5	20	54,3	50	30	10,0	27	30,2	16,0	18	10	52	6,8	230
361 153 00	2,5	30	77,9	75	50	14,0	27	31,1	22,2	18	15	45	10,2	550
361 448 00	3	16	53,2	48	40	13,2	30	32,7	17,7	19	15	52	5,9	250
361 449 00	3	24	75,5	72	50	8,0	24	27,8	18,6	19	15	40	8,9	490
361 452 00	3	20	65,2	60	40	10,0	33	35,8	16,8	24	15	60	12,4	390
361 453 00	3	30	93,5	90	50	15,0	33	37,6	25,7	24	20	53	18,6	860
361 848 00	4	16	71,0	64	50	12,5	36	38,9	19,3	25	20	65	14,3	500
361 849 00	4	24	100,7	96	60	12,0	31	35,6	23,5	25	20	52	21,5	1010
361 852 00	4	20	87,0	80	50	18,0	48	51,1	27,3	30	20	85	29,5	950
361 853 00	4	30	124,6	120	60	18,0	40	46,4	31,5	30	25	68	44,3	1900
362 152 00	5	20	108,7	100	60	12,0	50	54,7	22,9	40	25	95	60,6	1630
362 153 00	5	30	155,8	150	70	12,0	40	46,3	26,4	40	30	72	90,9	3070

* Basis for calculations see page 269.



Reworking within 24h-service possible. Custom made parts on request.

Bevel gears Made from Steel, Straight-Tooth System, Ratio 2:1

Material: up to product no. 36105700: 11SMnPb30.
from product no. 36106000: C45.

Tooth quality 8 modelled on DIN 3967 (from module 2).
Up to module 5 with crowned, milled teeth.
From module 6 with planed teeth. Not hardened – not lapped.

Shaft angle = 90°.

The bevel gears only run as a pair at the stated ratio and at the same module.

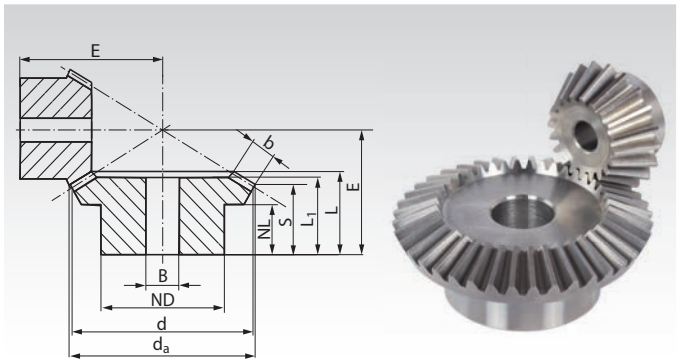

Ordering Details: e.g.:
1 Pair of Bevel Gears Ratio 2:1 Mod. 0.5 20/40 Teeth =
1 Piece Product No. 360 260 00 and
1 Piece Product No. 360 261 00

Ratio 2:1

Product No.	Module	Number of teeth	d_a mm	d mm	ND mm	NL mm	L_1 mm	L mm	S mm	b mm	B^{H7} mm	E mm	Torque* Nm	Weight g
360 260 00	0,5	20	11,2	10	8	4,0	7,0	7,5	5,0	3	4	14,65	0,017	2
360 261 00	0,5	40	20,3	20	12	5,0	7,5	8,4	7,1	3	4	11,83	0,034	8
360 556 00	1	15	17,4	15	13	6,5	11	11,9	7,6	5	5	22	0,063	10
360 557 00	1	30	30,6	30	20	9,0	13	15,1	13,1	5	5	20	0,126	40
360 756 00	1,5	15	26,1	22,5	18	6,5	13	14,8	8,4	7,6	8	30	0,22	26
360 757 00	1,5	30	45,9	45	30	12,0	18	20,7	17,6	7,6	10	28	0,44	124
360 760 00	1,5	20	33,6	30	20	9,5	19	21,6	12,9	10,1	8	42	0,54	59
360 761 00	1,5	40	60,9	60	40	12,0	19	22,0	17,9	10,1	15	32	1,08	234
361 056 00	2	15	33,7	30	20	7,5	22	23,0	10,9	14	10	40	0,59	58
361 057 00	2	30	61,8	60	40	12,0	24	27,2	21,9	14	15	35	1,18	312
361 060 00	2	20	43,7	40	30	7,5	22	24,0	10,9	15	10	50	1,4	132
361 061 00	2	40	81,8	80	50	18,0	29	32,8	26,9	15	20	45	2,8	593
361 156 00	2,5	15	42,2	37,5	30	15,4	31	33,3	18,6	17	10	55	3,4	160
361 157 00	2,5	30	77,3	75	50	10,0	24	28,1	21,6	17	15	38	6,8	530
361 160 00	2,5	20	54,6	50	30	14,0	34	36,6	19,2	20	10	68	4,3	280
361 161 00	2,5	40	102,3	100	60	15,0	29	33,3	25,3	20	25	48	8,6	970
361 456 00	3	15	50,6	45	30	11,5	33	35,4	16,4	22	10	60	6,1	270
361 457 00	3	30	92,8	90	50	10	26	30,7	22,3	22	20	42	12,2	750
361 460 00	3	20	65,6	60	40	10	33	36,1	14,4	25	15	73	15,2	450
361 461 00	3	40	122,8	120	60	18	34	38,7	28,8	25	25	56	30,4	1400
361 856 00	4	15	67,5	60	40	10	38	41,0	16,9	28	20	75	14,6	410
361 857 00	4	30	123,8	120	60	15	33	39,4	28,8	28	25	55	29,2	1600
361 860 00	4	20	87,4	80	50	13	45	48,0	21,9	30	20	100	35,0	970
361 861 00	4	40	163,7	160	80	20	40	45,7	33,7	30	30	70	70,0	3300
362 156 00	5	15	84,4	75	60	15	50	54,1	21,4	38	20	94	30,2	980
362 157 00	5	30	154,7	150	70	15	40	46,7	32,2	38	30	65	60,4	3030
362 160 00	5	20	109,3	100	60	18	58	62,1	27,3	40	25	125	72,4	1890
362 161 00	5	40	204,7	200	90	20	48	55,6	39,7	40	35	85	144,8	6480
367 360 00	6	20	130,7	120	70	15	58	67	23,6	50	30	139,9	130,0	2960
367 361 00	6	40	245,3	240	100	20	50	58	37,7	50	40	92,3	260,0	9610

* Basis for calculations see page 269.



Reworking within 24h-service possible. Custom made parts on request.

Bevel Gears Made from Steel, Straight-Tooth System, Ratio 2.5:1 and 3:1

Material: up to module 2: 11SMnPb30.
from module 2.5: C45.

Tooth quality 8 modelled on DIN 3967 (from module 2).
Up to module 5 with crowned, milled teeth.
From module 6 with planed teeth. Not hardened – not lapped.

Shaft angle = 90°.

The bevel gears only run as a pair at the stated ratio and at the same module.

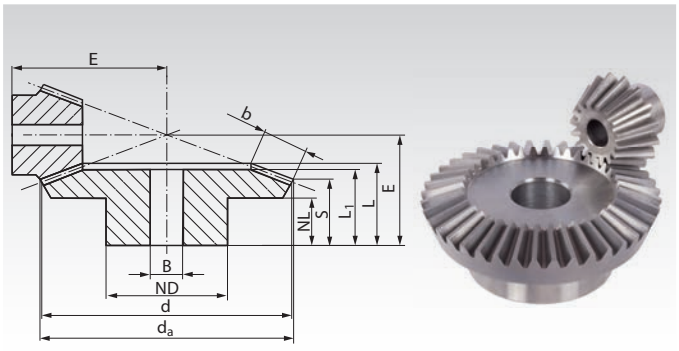

Ordering Details: e.g.:
1 Pair of Bevel Gears Ratio 2.5:1 Mod. 0.5 20/50 Teeth =
1 Piece Product No. 360 272 00 and
1 Piece Product No. 360 273 00

Ratio 2.5:1

Product No.	Module	Number of teeth	d_a mm	d mm	ND mm	NL mm	L_1 mm	L mm	S mm	b mm	B^{H7} mm	E mm	Torque* Nm	Weight g
360 272 00	0,5	20	11,3	10	8	4,0	7	7,6	4,9	3	4	17,1	0,018	3
360 273 00	0,5	50	25,2	25	14	5,0	7	7,8	6,8	3	4	11,5	0,045	10
360 564 00	1	16	18,6	16	13	7,4	13	14,4	8,5	6,5	5	28	0,090	13
360 565 00	1	40	40,5	40	25	9,0	13	14,8	12,6	6,5	8	20	0,225	65
360 764 00	1,5	16	27,9	24	18	8,8	18	19,5	10,8	9,7	8	40	0,32	36
360 765 00	1,5	40	60,7	60	40	10,0	17	20,1	16,9	9,7	15	28	0,80	220
360 768 00	1,5	18	30,9	27	20	10,8	21	22,9	13,0	10,9	8	46	0,47	54
360 769 00	1,5	45	68,2	67,5	50	12,0	20	24,1	20,4	10,9	15	33	1,18	370
361 064 00	2	16	35,8	32	20	9,0	25	26,4	12,7	15	10	52	0,84	76
361 065 00	2	40	81,5	80	50	15,0	29	32,7	27,9	15	20	42	2,10	650
361 068 00	2	18	39,8	36	30	11,8	26	27,4	13,8	15	10	58	1,18	133
361 069 00	2	45	91,5	90	60	18,0	30	33,8	28,9	15	25	45	2,95	830
361 164 00	2,5	16	44,8	40	30	13,0	32	34,1	15,9	20	10	65	5,0	180
361 165 00	2,5	40	101,9	100	60	15,0	29	33,8	27,4	20	25	45	12,5	1000
361 168 00	2,5	18	49,8	45	30	15,6	36	37,9	19,7	20	10	75	7,1	240
361 169 00	2,5	45	114,4	112,5	70	15,0	28	33,4	26,9	20	25	47	17,8	1200
361 464 00	3	16	53,8	48	40	13,6	37	38,8	16,1	25	15	75	9,0	310
361 465 00	3	40	122,3	120	60	16,0	32	36,8	28,9	25	25	50	22,5	1400
361 468 00	3	18	59,8	54	40	11,7	36	38,4	15,7	25	15	82	12,8	380
361 469 00	3	45	137,3	135	70	18,0	34	39,0	30,9	25	30	55	32,0	1900
361 864 00	4	16	71,8	64	50	12,0	41	43,8	16,5	30	20	95	20,9	600
361 865 00	4	40	163,1	160	80	20,0	40	46,4	36,9	30	30	65	52,3	3400
361 868 00	4	18	79,7	72	50	13,8	44	46,8	19,5	30	20	108	29,3	800
361 869 00	4	45	183,0	180	90	20,0	43	49,6	39,9	30	30	72	73,3	4900
362 168 00	5	18	99,6	90	60	16,5	57	60,8	24,4	40	25	135	61,0	1560
362 169 00	5	45	228,8	225	100	20,0	50	57,8	44,8	40	40	85	152,5	9080

Ratio 3:1

Product No.	Module	Number of teeth	d_a mm	d mm	ND mm	NL mm	L_1 mm	L mm	S mm	b mm	B^{H7} mm	E mm	Torque* Nm	Weight g
360 276 00	0,5	15	8,0	7,5	6	3,7	6,5	7,0	4,3	3	3	15,3	0,009	1
360 277 00	0,5	45	22,7	22,5	12	5,0	7,5	8,4	7,5	3	4	11,0	0,027	10
360 576 00	1	15	17,7	15	13	9,2	16	16,5	10,0	7,1	5	32	0,086	14
360 577 00	1	45	45,4	45	25	10	15	17,0	15,1	7,1	8	22	0,258	92
360 780 00	1,5	16	28	24	18	11	22	23,2	12,7	11,4	8	48	0,38	42
360 781 00	1,5	48	72,6	72	50	12	20	24,1	20,8	11,4	15	32	1,14	405
361 080 00	2	16	35,9	32	20	10	25	26,6	12,6	15	10	60	0,92	80
361 081 00	2	48	97,3	96	60	18	30	35,0	31,0	15	25	45	2,76	950
361 180 00	2,5	16	44,9	40	30	15	34	36,5	17,8	20	10	77	5,6	200
361 181 00	2,5	48	121,6	120	80	15	29	33,9	28,5	20	25	46	16,8	1600
361 480 00	3	16	53,9	48	40	12,5	36	38,3	15,0	25	15	86	10,0	310
361 481 00	3	48	145,9	144	70	18	34	38,7	32,0	25	30	53	30,0	2300
361 880 00	4	16	71,8	64	50	17	46	48,3	20,3	30	20	115	22,9	680
361 881 00	4	48	194,6	192	90	20	43	50,0	41,9	30	30	70	68,7	5700
362 176 00	5	15	84,9	75	60	15	53	56,4	19,1	40	20	130	39,3	1110
362 177 00	5	45	228,3	225	100	20	45	53,1	42,4	40	40	75	117,9	7920
362 180 00	5	16	89,8	80	60	16,5	55	59,0	21,6	40	20	140	47,7	1310
362 181 00	5	48	243,2	240	100	20	47	55,7	44,9	40	40	80	143,1	9640
367 376 00	6	15	101,4	90	70	20	67	73	26,2	50	30	159,2	70,7	1880
367 377 00	6	45	273,8	270	100	30	60	69	55,0	50	45	94,3	212,1	13170

* Basis for calculations see page 269.



Reworking within 24h-service possible. Custom made parts on request.

Bevel gears Made from Steel, Straight-Tooth System, Ratio 3.5:1 and 4:1

Material: up to module 2: 11SMnPb30.
from module 2.5: C45.

Tooth quality 8 modelled on DIN 3967 (from module 2). With crowned, milled teeth. Not hardened – not lapped.

Shaft angle = 90°.

The bevel gears only run as a pair at the stated ratio and at the same module.

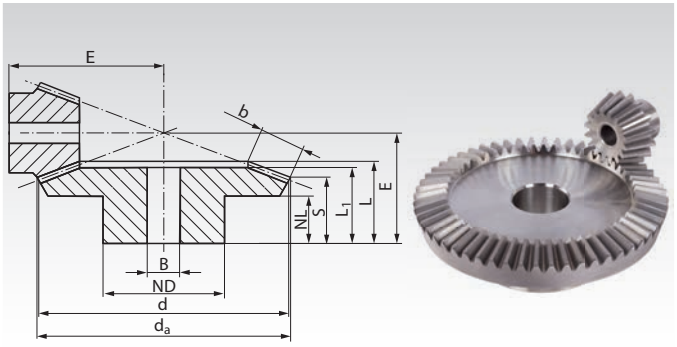

Ordering Details: e.g.:
1 Pair of Bevel Gears Ratio 3.5:1 Mod. 1 16/56 Teeth =
1 Piece Product No. 360 584 00 and
1 Piece Product No. 360 585 00

Ratio 3.5:1

Product No.	Module	Number of teeth	d_a mm	d mm	ND mm	NL mm	L_1 mm	L mm	S mm	b mm	B^{H7} mm	E mm	Torque* Nm	Weight g
360 584 00	1	16	18,7	16	13	7,6	16	16,6	8,4	8,7	5	36	0,127	16
360 585 00	1	56	56,3	56	30	10,0	14	16,7	14,6	8,7	8	22	0,445	130
360 784 00	1,5	16	28,1	24	18	12,2	24	26	13,6	13,1	8	55	0,45	48
360 785 00	1,5	56	84,5	84	50	12	24	27,1	23,8	13,1	15	35	1,58	634
361 084 00	2	16	35,9	32	20	10	25	26,8	12,5	15	10	68	0,99	82
361 085 00	2	56	113,1	112	60	18	31	35,5	31,9	15	25	46	3,47	1200
361 184 00	2,5	16	44,9	40	30	16,5	36	37,7	18,7	20	10	88	6,0	220
361 185 00	2,5	56	141,4	140	80	18	32	37,2	32,4	20	25	50	21,0	2300
361 484 00	3	16	53,9	48	40	15	39	40,6	16,8	25	15	100	10,9	340
361 485 00	3	56	169,7	168	80	18	33	39,8	34,0	25	30	55	38,2	3100
361 884 00	4	16	71,9	64	50	13	42	44,6	16,1	30	20	127	24,7	660
361 885 00	4	56	226,3	224	90	20	40	49,0	42,0	30	30	70	86,5	6900

Ratio 4:1

Product No.	Module	Number of teeth	d_a mm	d mm	ND mm	NL mm	L_1 mm	L mm	S mm	b mm	B^{H7} mm	E mm	Torque* Nm	Weight g
360 592 00	1	15	17,8	15	13	7,7	16	17,3	8,4	9,3	5	38	0,117	15
360 593 00	1	60	60,3	60	30	10,0	15	17,1	15,1	9,3	8	22	0,468	160
360 792 00	1,5	15	26,7	22,5	18	14,4	28	28,9	15,5	13,9	8	60	0,41	42
360 793 00	1,5	60	90,4	90	50	12,0	25	27,6	24,6	13,9	15	35	1,64	745
361 092 00	2	15	34,0	30	20	13,5	29	29,9	15,5	15	10	75	1,02	80
361 093 00	2	60	120,9	120	60	20,0	35	40,1	37,0	15	25	50	4,08	1600
361 192 00	2,5	15	42,5	37,5	30	16,0	35	36,8	17,6	20	10	92	5,3	190
361 193 00	2,5	60	151,2	150	80	18,0	33	37,8	33,8	20	25	50	21,2	2600
361 492 00	3	15	51,0	45	30	13,0	38	39,7	15,7	25	10	105	9,6	270
361 493 00	3	60	181,5	180	80	18,0	35	40,6	35,5	25	30	55	38,4	3800
361 892 00	4	15	68,0	60	40	12,5	43	44,8	16,0	30	20	135	21,7	520
361 893 00	4	60	242,0	240	90	20,0	41	50,1	44,0	30	30	70	86,8	8300

* Basis for calculations see page 269.



Reworking within 24h-service possible. Custom made parts on request.

Bevel Gears Made from Stainless Steel, Straight-Tooth System, Ratio 1:1 to 4:1

Material: Stainless steel 1.4305.

Tooth quality 8 modelled on DIN 3967 (from module 2). Crowned, milled teeth.

Shaft angle 90°.

The bevel gears only run as a pair at the stated ratio and at the same module.

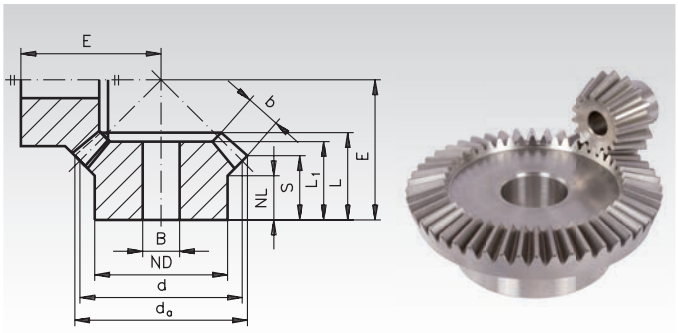

Drawing: Ratio 1:1, photo: ratio 3:1

Ordering Details: e.g.:
1 Pair of Bevel Gears Ratio 1:1 Mod. 1 16 teeth = 2 pieces Product No. 360 995 07.
1 Pair of Bevel Gears Ratio 2:1 Mod. 1 15/30 Teeth = 1 Piece Product No. 360 995 56 and 1 Piece 360 995 57.

Ratio 1:1

Product No.	Module	Number of teeth	d_a mm	d mm	ND mm	NL mm	L_1 mm	L mm	S mm	b mm	B^{H7} mm	E mm	Torque* Nm	Weight g
360 995 07	1	16	17,4	16	14	7	10	11,2	8,7	4,0	5	16	0,06	9
360 997 07	1,5	16	26,1	24	20	11	15	17,3	14,1	5,1	8	25	0,19	32
361 990 07	2	16	34,8	32	25	11,5	18	20,7	16,4	6,8	10	31	0,46	66
361 991 07	2,5	16	43,7	40	30	10	21	23,8	16,8	11	10	35	1,1	120
361 994 07	3	16	52,4	48	40	12	24	27,7	18,2	15	10	40	2,0	240
361 998 07	4	16	70,0	64	50	11	29	32,9	21,0	19	20	50	4,8	420

Ratio 2:1

Product No.	Module	Number of teeth	d_a mm	d mm	ND mm	NL mm	L_1 mm	L mm	S mm	b mm	B^{H7} mm	E mm	Torque* Nm	Weight g
360 995 56	1	15	17,4	15	13	6,5	11	11,9	7,6	5,0	5	22	0,08	10
360 995 57	1	30	30,6	30	20	9,0	13	15,1	13,1	5,0	5	20	0,16	40
360 997 56	1,5	15	26,1	22,5	18	6,5	13	14,8	8,4	7,6	8	30	0,27	26
360 997 57	1,5	30	45,9	45	30	12,0	18	20,7	17,6	7,6	10	28	0,54	124
361 990 56	2	15	33,7	30	20	7,5	22	23,0	10,9	14	10	40	0,78	58
361 990 57	2	30	61,8	60	40	12,0	24	27,2	21,9	14	15	35	1,56	312
361 991 56	2,5	15	42,2	37,5	30	15,4	31	33,3	18,6	17	10	55	1,6	160
361 991 57	2,5	30	77,3	75	50	10,0	24	28,1	21,6	17	15	38	3,2	530
361 994 56	3	15	50,6	45	30	11,5	33	35,4	16,4	22	10	60	2,8	270
361 994 57	3	30	92,8	90	50	10,0	26	30,7	22,3	22	20	42	5,6	750
361 998 56	4	15	67,5	60	40	10,0	38	41,0	16,9	28	20	75	6,0	410
361 998 57	4	30	123,8	120	60	15,0	33	39,4	28,8	28	25	55	12,0	1600

Ratio 3:1

Product No.	Module	Number of teeth	d_a mm	d mm	ND mm	NL mm	L_1 mm	L mm	S mm	b mm	B^{H7} mm	E mm	Torque* Nm	Weight g
360 995 76	1	15	17,7	15	13	9,2	16	16,5	10,0	7,1	5	32	0,10	14
360 995 77	1	45	45,4	45	25	10	15	17,0	15,1	7,1	8	22	0,30	92
360 997 80	1,5	16	28,0	24	18	11	21	23,2	12,7	11,4	8	48	0,45	42
360 997 81	1,5	48	72,6	72	50	12	20	24,1	20,8	11,4	15	32	1,35	405
361 990 80	2	16	35,9	32	20	10	25	26,6	12,6	15	10	60	1,21	80
361 990 81	2	48	97,3	96	60	18	30	35,0	31,0	15	25	45	3,63	95
361 991 80	2,5	16	44,9	40	30	15	34	36,5	17,8	20	10	77	2,6	200
361 991 81	2,5	48	121,6	120	80	15	29	33,9	28,5	20	25	46	7,8	1600
361 994 80	3	16	53,9	48	40	12,5	36	38,3	15,0	25	15	86	4,6	310
361 994 81	3	48	145,9	144	70	18	34	38,7	32,0	25	30	53	13,8	2300
361 998 80	4	16	71,8	64	50	17	46	48,3	20,3	30	20	115	9,4	680
361 998 81	4	48	194,6	192	90	20	43	50,0	41,9	30	30	70	28,2	5700

Ratio 4:1

Product No.	Module	Number of teeth	d_a mm	d mm	ND mm	NL mm	L_1 mm	L mm	S mm	b mm	B^{H7} mm	E mm	Torque* Nm	Weight g
360 995 92	1	15	17,8	15	13	7,7	16	17,3	8,4	9,3	5	38	0,14	15
360 995 93	1	60	60,3	60	30	10,0	15	17,1	15,1	9,3	8	22	0,56	160
360 997 92	1,5	15	26,7	22,5	18	14,4	28	28,9	15,5	13,9	8	60	0,48	42
360 997 93	1,5	60	90,4	90	50	12,0	25	27,6	24,6	13,9	15	35	1,92	745
361 990 92	2	15	34,0	30	20	13,5	29	29,9	15,5	15	10	75	1,34	80
361 990 93	2	60	120,9	120	60	20,0	35	40,1	37,0	15	25	50	5,36	1600
361 991 92	2,5	15	42,5	37,5	30	16,0	35	36,8	17,6	20	10	92	2,5	190
361 991 93	2,5	60	151,2	150	80	18,0	33	37,8	33,8	20	25	50	10,0	2600
361 994 92	3	15	51,0	45	30	13,0	38	39,7	15,7	25	10	105	4,4	270
361 994 93	3	60	181,5	180	80	18,0	35	40,6	35,5	25	30	55	17,6	3800
361 998 92	4	15	68,0	60	40	12,5	43	44,8	16,0	30	20	135	8,9	520
361 998 93	4	60	242,0	240	90	20,0	41	50,1	44,0	30	30	70	35,6	8300

* Basis for calculations see page 269.

Bevel Gears Made from Steel, Spiral Tooth System, Ratio 1:1

Material up to module 1.5: 42CrMo4, with cyclo-palloid spiral tooth system, teeth induction hardened.

Material from module 2.0: 16MnCr5, with palloid spiral tooth system, teeth case hardened.

Hubs and bores soft.
Products marked with * are not hardened.**

Tooth quality 8 modelled on DIN 3967.
Sold in pairs only.

Ordering Details: e.g.:
Product No. 385 316 00 = 1 Pair of Bevel Gears Ratio 1:1
Mod. 0.6 25/25 Teeth

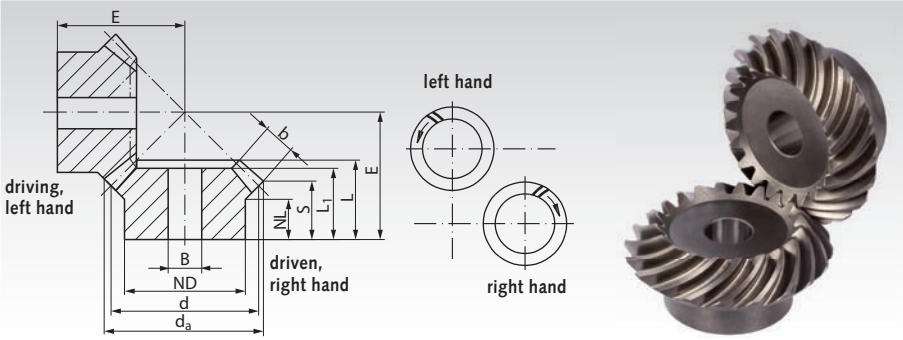

Ratio 1:1

Product No.	Module	Number of teeth	d_a mm	d mm	ND mm	NL mm	L_1 mm	L mm	$S^{1)}$ mm	b mm	B^{H7} mm	E mm	Torque* Nm	Weight g/Pair
385 316 00	0,6	25	23,3	22,5	19	7,2	12	13,4	9,2	6	6	20	2,1	50
385 320 00	0,6	30	27,8	27	22	7	13	14,9	9,9	7	8	23	3,0	75
385 322 00	0,6	35	32,3	31,5	25	7,2	15	16,3	10,6	8	8	26	3,5	116
385 511 00	1	20	31,4	30	25	8,4	15	17,3	11,7	8	8	26	6,3	112
385 516 00	1	25	38,9	37,5	25	8	16	19,0	11,9	10	10	30	10,0	155
385 520 00	1	30	46,4	45	30	8	19	21,7	13,2	12	10	35	14,3	278
385 611 00	1,3	20	41,8	40	30	7,3	19	20,7	12,9	11	10	32	14,8	222
385 616 00	1,3	25	51,8	50	30	8	19	21,8	11,9	14	10	36	18,5	326
385 620 00	1,3	30	61,8	60	35	8	21	24,2	12,9	16	12	42	31,5	530
385 709 00	1,5	18	41,7	39,6	30	8	17	20,3	13,2	10	10	32	15,9	209
385 715 00	1,5	24	54,9	52,8	35	8	20	22,6	12,7	14	10	38	21,2	408
385 719 00	1,5	28	63,7	61,6	40	8	20	23,2	13,3	14	12	43	34,5	576
386 011 00**	2	20	72,8	70	45	15	28	32,7	21,4	16	16	55	66,7	973
386 016 00**	2	25	80,3	78	45	15	29	32,3	22,4	14	16	60	72,8	1200
381 018 00***	2	26	82,8	80	55	20	35	37,7	26,4	16	16	65	42,0	1581
386 111 00**	2,5	20	91,5	88	56	18	34	36,9	22,8	20	20	65	130,5	1700
386 116 00**	2,5	25	99,5	96	54	16	32	37,2	23,8	19	20	70	154,7	2000
381 119 00***	2,5	28	109,9	106,4	70	25	44	47,7	33,6	20	20	85	98,6	3400
386 411 00**	3	20	104,2	100	68	17	36	43,4	27,1	23	25	75	216	2600
386 416 00**	3	25	116,2	112	64	18	34	41,7	26,1	22	25	80	257	2800
386 516 00**	3,5	25	132,9	128	72	20	38	46,2	28,5	25	30	90	396	4200
381 518 00***	3,5	26	144,9	140	85	30	57	62,3	42,5	28	30	110	238	7300

[1)] Theoretical dimensions, from module 2, tips of teeth levelled.
* Basis for calculations see page 269.
** Gears with ground hub contact surfaces and bores.
*** Not hardened.

Description of spiral toothed bevel gears

Distinctive features of bevel gears with spiral tooth system (spiral bevel gears):
Klingelnberg Cyclo-Palloid Tooth System: These gears are produced using the continuous generating method with a two-part cutter head.The tooth curvature follows the path of a extended epicycloid.
Klingelnberg Palloid Tooth System: These gears are produced using the continuous indexing method with a cone shaped gear hob. The tooth curvature follows the path of an extended involute.
Gleason-Circarc Gearing: These gears are produced using the continuous indexing method with a disk-shaped cutting head. The tooth curvature follows the path of a circular arc.
Cyclo-Palloid-, Palloid- and Gleason Tooth Systems are not interchangeable.

Available from stock: Cyclo-Palloid Tooth System Mod. 0.6 up to 1.5. Palloid Tooth System Mod. 2.0 up to 3.5.
Gleason Tooth System not in stock, supplied on demand.

The spiral tooth system offers very quiet running as there are always several teeth in mesh. Without load, the contact profile zone should be in the middle of the tooth, lengthwise. Under load the contact profile zone evenly expands towards the inside and outside diameter. The ground contact surfaces of the hubs and bores guarantee an exact adjustment of the assembly dimension E.

Sense of rotation:
If the transmission ratio is not 1:1, the rotational direction marked on the drawing above should be preferred (more favourable direction of the axial forces).


Reworking within 24h-service possible. Custom made parts on request.

Bevel Gears Made from Steel, Spiral Tooth System, Ratio 1.214:1 to 1.615:1

Material up to module 1.5: 42CrMo4, with cyclo-palloid spiral tooth system, teeth induction hardened.

Material from module 2.0: 16MnCr5, with palloid spiral tooth system, teeth case hardened.

Hubs and bores soft.
Tooth quality 8 modelled on DIN 3967.

Sold in pairs only.

Ordering Details: e.g.:
Product No. 385 740 00 = 1 Pair of Bevel Gears
Ratio 1.214:1 Mod. 1.5 14/17 Teeth

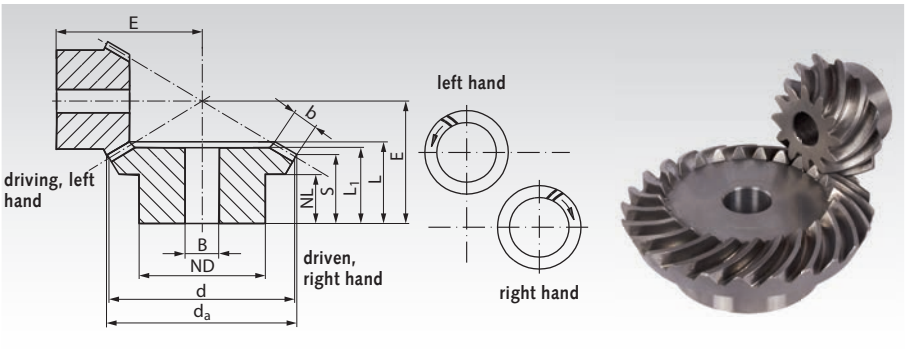

Ratio 1.214:1

Product No.	Module	Number of teeth	d_a mm	d mm	ND mm	NL mm	L_1 mm	L mm	S mm	b mm	B^{H7} mm	E mm	Torque* Nm	Weight g/Pair
385 740 00	1,5	14	41,0	38,7	22	11	21,1	24,2	15,4	11,5	12	38,0	14,1	236
		17	48,9	47,0	30	11	20,9	23,9	16,6	11,5	15	34,8	17,1	

Ratio 1.385:1

Product No.	Module	Number of teeth	d_a mm	d mm	ND mm	NL mm	L_1 mm	L mm	S mm	b mm	B^{H7} mm	E mm	Torque* Nm	Weight g/Pair
385 744 00	1,5	13	36,7	33,9	22	11	21,6	24,0	15,9	10	12	38,5	11,3	216
		18	48,5	47,0	30	11	20,9	24,9	19,1	10	15	34,8	15,7	

Ratio 1.5:1

Product No.	Module	Number of teeth	d_a mm	d mm	ND mm	NL mm	L_1 mm	L mm	S[1] mm	b mm	B^{H7} mm	E mm	Torque* Nm	Weight g/Pair
385 354 00	0,6	22	20,8	19,8	17	7	13	14,3	8,5	7	6	23	2,2	116
		33	30,3	29,7	20	8	14	15,5	11,6	7	8	21	3,3	
385 552 00	1	20	31,6	30	25	8	17	18,3	10,0	10	8	32	8,1	166
		30	46,3	45	30	8	17	19,5	14,0	10	10	28	12,2	
385 648 00	1,3	16	34,3	32	25	8	18	19,9	10,7	11	8	34	11,9	220
		24	49,4	48	30	8	18	21,1	15,0	11	10	30	17,9	
385 748 00	1,5	16	37,8	35,8	30	8	17	18,8	10,5	10	10	36	14,3	273
		24	54,4	52,8	35	8	17	21,1	15,6	10	10	32	21,5	
386 048 00**	2	16	53,3	50	35	6	18	21,2	13,6	11	10	48,45	40,3	561
		24	77,2	75	39	15	24	27,7	21,7	11	16	45	60,5	
386 148 00**	2,5	16	68,2	64	40	14	25	31,7	18,4	16	16	65	83,8	1300
		24	98,8	96	54	14	23	28,9	20,1	16	20	50	125,7	
386 448 00**	3	16	81,0	76	50	15	28	35,5	19,7	19	20	75	143	1682
		24	117,3	114	64	18	28	35,0	24,5	19	25	60	215	

Ratio 1.615:1

Product No.	Module	Number of teeth	d_a mm	d mm	ND mm	NL mm	L_1 mm	L mm	S mm	b mm	B^{H7} mm	E mm	Torque* Nm	Weight g/Pair
385 550 00	1	13	20,3	18,6	16	8,2	12	13,8	9,5	5	8	24	2,4	45
		21	31,1	30,0	20	6	10,5	12,2	9,6	5	10	18	3,9	

[1] Theoretical dimensions, from module 2, tips of teeth levelled.
* Basis for calculations see page 269.
** Gears with ground hub contact surfaces and bores.

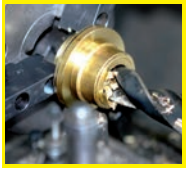

Reworking within 24h-service possible. Custom made parts on request.

Bevel Gears Made from Steel, Spiral Tooth System, Ratio 2:1 to 2.5:1

Material up to module 1.5: 42CrMo4, with cyclo-palloid spiral tooth system, teeth induction hardened.

Material from module 2.0: 16MnCr5, with palloid spiral tooth system, teeth case hardened.

Hubs and bores soft.
Products marked with * are not hardened.**

Tooth quality 8 modelled on DIN 3967.
Sold in pairs only.

Ordering Details: e.g.:
Product No. 385 362 00 = 1 Pair of Bevel Gears Ratio 2:1
Mod. 0.6 22/44 Teeth

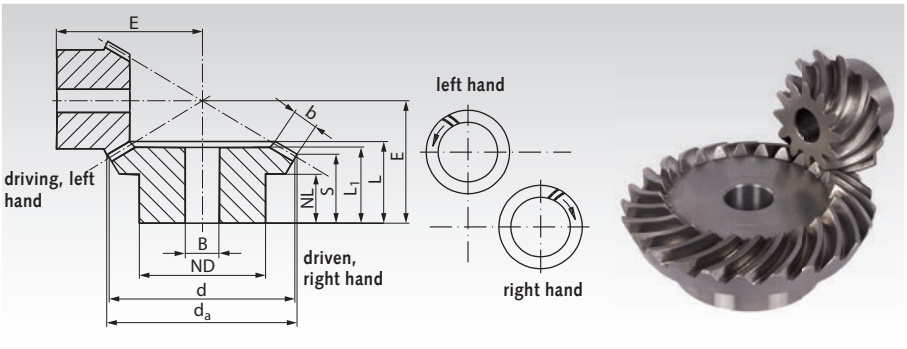

Ratio 2:1

Product No.	Module	Number of teeth	d_a mm	d mm	ND mm	NL mm	L_1 mm	L mm	S[1)] mm	b mm	B^{H7} mm	E mm	Torque* Nm	Weight g/Pair
385 362 00	0,6	22	20,8	19,8	16	7,4	15	15,6	8,5	8	6	28	2,3	116
		44	40,1	39,6	25	8	15	17,2	13,6	8	10	23	4,6	
385 560 00	1	20	31,8	30	25	8	19	20,2	9,4	12	8	39	9,8	323
		40	60,9	60	40	8	18	21,2	15,9	12	12	30	19,6	
385 658 00	1,3	16	34,4	32	25	7	20	22,1	9,6	14	8	41	12,0	397
		32	65,1	64	40	8	20	23,3	17,1	14	12	32	24,0	
385 756 00	1,5	16	38,0	35,2	30	8,4	19	21,2	10,5	12	10	45	14,4	435
		32	71,7	70,4	45	8	17	21,0	15,7	12	12	32	28,8	
381 054 00* **	2	12	45,1	41,5	30	12	27,8	27,8	14,4	15	12	54,94	10,1	846
		24	84,5	83	50	15	29	32,6	26,0	15	16	44,97	20,2	
386 054 00 **	2	13	48,6	45	30	15	30	33,0	20,9	15	10	63,65	40,2	818
		26	91,8	90	40	22	30	35,9	29,3	15	16	50	80,4	
381 154 00* **	2,5	11	57,2	52,5	40	15	36,6	36,6	18,7	20	16	69,97	17,8	2000
		22	107,1	105	70	20	39	44,6	35,9	20	20	59,95	35,6	
386 154 00 **	2,5	13	60,5	56	39	15	34	38,2	20,1	20	16	75,13	84	1400
		26	114,2	112	54	21	30	38,0	29,3	20	25	55	168	
386 454 00 **	3	13	69,4	64	45	16	37	41,7	22,3	22	20	84,62	133	2000
		26	130,6	128	54	20	32	40,3	30,7	22	25	60	266	
381 456 00* **	3	15	77,9	72,5	55	25	51,3	51,3	28,8	25	20	100	64	4800
		30	147,6	145	90	25	50	57,4	46,5	25	30	80	128	
386 554 00 **	3,5	13	78,3	72	54	12	34	39,5	19,5	24	20	88,38	197	2800
		26	147,1	144	64	25	38	47,7	37,2	24	30	70	394	

Ratio 2.066:1

Product No.	Module	Number of teeth	d_a mm	d mm	ND mm	NL mm	L_1 mm	L mm	S mm	b mm	B^{H7} mm	E mm	Torque* Nm	Weight g/Pair
385 556 00	1	15	23,6	21,8	19	6	13,2	13,2	6,9	7	8	29,0	3,6	112
		31	45,9	45,0	24	8	14,1	16,6	13,5	7	10	23,5	7,4	

Ratio 2.5:1

Product No.	Module	Number of teeth	d_a mm	d mm	ND mm	NL mm	L_1 mm	L mm	S[1)] mm	b mm	B^{H7} mm	E mm	Torque* Nm	Weight g/Pair
385 374 00	0,6	22	20,9	19,8	16	6,8	16	16,7	7,5	10	6	32	2,6	172
		55	49,9	49,5	30	8	16	19,3	15,6	10	10	25	6,5	
385 572 00	1,0	20	31,8	30	25	8,4	21	22,8	9,8	14	8	47	9,9	355
		50	75,7	75	50	8	18	21,1	15,9	14	12	30	24,8	
385 666 00	1,3	14	30,5	28	22	8,7	20	21,6	10,5	12	8	45	11,3	420
		35	70,9	70	45	8	18	21,6	17,1	12	12	30	28,2	
385 764 00	1,5	16	38,0	35,2	30	7,5	20	21,6	9,6	13	10	53	14,5	624
		40	89,1	88	60	8	16	20,6	15,8	13	15	32	36,3	
386 162 00 **	2,5	10	45,4	40	33	11	24,5	27,4	16,1	15	12	62,33	45,8	1200
		25	101,5	100	54	22	30	37,3	32,0	15	25	50	114,5	
386 462 00 **	3,0	10	54,5	48	39	11	28	30,8	16,3	18	16	72,71	79	1700
		25	121,8	120	64	28	38	44,8	38,4	18	25	60	198	
386 562 00 **	3,5	10	63,6	56	40	14	34	38,1	21,5	21	16	87,06	126	2400
		25	142,1	140	70	35	45	52,3	44,8	21	30	70	315	

[1)] Theoretical dimensions, from module 2, tips of teeth levelled.
* Basis for calculations see page 269.
** Gears with ground hub contact surfaces and bores.
*** Not hardened.



Reworking within 24h-service possible. Custom made parts on request.

Bevel Gears Made from Steel, Spiral Tooth System, Ratio 3:1 and 4:1

Material up to module 1.5: 42CrMo4, with cyclo-palloid spiral tooth system, teeth induction hardened.

Material from module 2.0: 16MnCr5, with palloid spiral tooth system, teeth case hardened.

Hubs and bores soft.
Tooth quality 8 modelled on DIN 3967.

Sold in pairs only.

Ordering Details: e.g.:
Product No. 385 580 00 = 1 Pair of Bevel Gears
Ratio 2.882:1 Mod. 1 17/49 Teeth

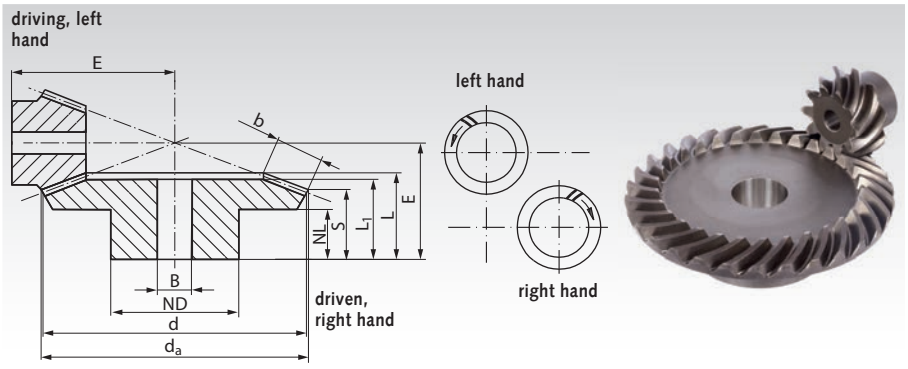

Ratio 3:1

Product No.	Module	Number of teeth	d_a mm	d mm	ND mm	NL mm	L_1 mm	L mm	$S^{1)}$ mm	b mm	B^{H7} mm	E mm	Torque* Nm	Weight g/Pair
385 378 00	0,6	20	19,1	18	15	7,5	17	17,0	8,2	10	6	35	2,1	175
		60	54,3	54	45	8	16	19,7	16,6	10	10	25	6,3	
385 584 00	1	16	26,1	24	20	8,3	22	22,6	9,3	14	8	45	5,8	380
		48	72,5	72	50	8	18	21,3	16,8	14	12	28	17,4	
385 678 00	1,3	11	25,1	22	19	6	17	17,9	7,5	11	8	40	7,7	320
		33	66,6	60	40	8	17	20,4	16,9	11	12	27	23,1	
385 774 00	1,5	10	26,0	22	17	8	19	20,1	9,6	11	8	42	9,1	380
		30	66,6	66	40	8	17	21,3	17,8	11	12	28	27,3	
386 074 00**	2	10	36,5	32	22	11	24	25,6	17,7	13	8	60,52	25,4	638
		30	99,0	96	48	19	25	29,4	25,6	13	20	40	76,2	
386 174 00**	2,5	10	43,1	37,5	27	12	26,5	28,8	19,6	15	12	69,84	45,8	1100
		30	113,7	112,5	54	24	32	37,6	33,2	15	25	50	137,4	
386 574 00**	3,5	10	60,3	52,5	40	12	33	36,1	22,5	22	16	92,64	132	2700
		30	159,2	157,5	70	29	40	48,0	41,5	22	30	65	396	

Ratio 4:1

Product No.	Module	Number of teeth	d_a mm	d mm	ND mm	NL mm	L_1 mm	L mm	S mm	b mm	B^{H7} mm	E mm	Torque* Nm	Weight g/Pair
385 594 00	1	16	25,9	24	20	7,3	21	21,8	8,2	14	8	56	7,8	842
		64	96,5	96	70	8	19	22,4	19	14	20	30	31,2	
385 784 00	1,5	11	27,8	24,2	20	8	19	20,7	9	12	8	57	11,3	775
		44	97,3	96,8	70	8	17	21,9	19	12	20	30	45,2	

[1)] Theoretical dimensions, from module 2, tips of teeth levelled.
* Basis for calculations see page 269.
** Gears with ground hub contact surfaces and bores.



Reworking within 24h-service possible. Custom made parts on request.

Mounting Options for Drive Wheels

There are several possibilities for mounting driving wheels (sprockets, V-Belt Pulleys, pulleys, spur gears etc.) or hubs on shafts. Most wheels are stocked with a rather small bore to allow for further machining. Machining works as drilling out, keywaying a.s.o. can be done at extra charge.

Please note: for several shaft diameters a number of sprockets, V-belt pulleys, spur gears and worm-gear sets are in stock "ready-to-install", i.e. with custom bore and keyway or prepared for Taper clamping bushes.



Fixing Pins

A hole is drilled through hub and shaft and both parts are then connected with a fixing pin. Usually only one side of the hub is pre-drilled, then the wheel is pushed onto the shaft and the hole is drilled through both shaft and the other side of the hub. Then the pin is driven in. This mounting method is suitable for low torques.

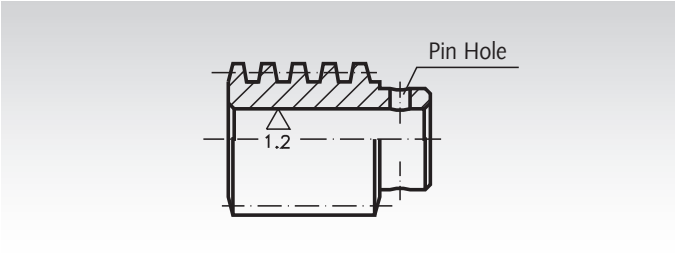

Feather Key Connection

Shaft and hub both receive a keyway, a key is pushed into the keyway of the hub. The wheel is pushed onto the shaft and secured against axial movement (with a set screw or with a stepped shaft and axial screw and washer at the end of the shaft). The most common kind of keyway is DIN 6885/1. Key connections are suitable for medium torques. Keys DIN 6885 see page 578. Boxes with an assortment of keys DIN 6885 see page 577.

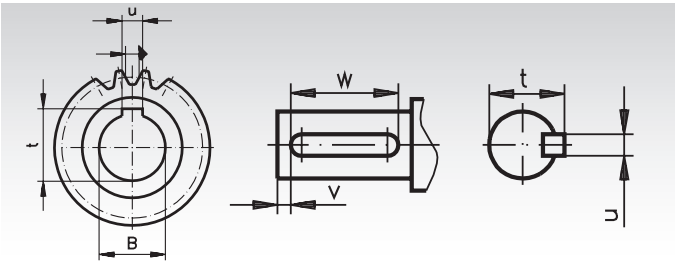

Clamping Sets, Clamping Bushes and Shrink Disks

Clamping sets and thin-walled clamping bushes are available for various diameters. They allow fast and easy mounting on round shafts. A keyway is not required. Shrink disks are special clamping sets which press a thin-walled hub onto a shaft. Clamping connections are suitable for rather high torques. **Clamping sets and bushes, and shrink disks** see page 330.

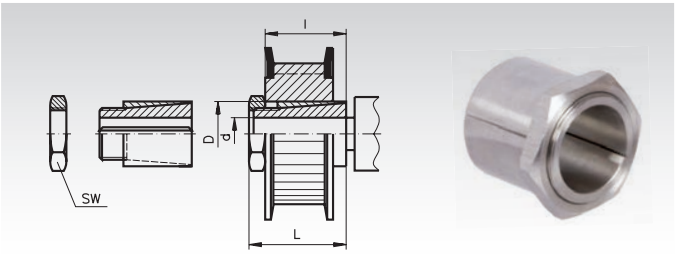

Taper Clamping Bushes

These customary conical bushes are used for easy and fast mounting of driving elements in Taper version. They can be used with and without key.

The bushes are available with various outer dimensions. For every outside measure there are bushes with many different bores available. This mounting method is cost-efficient and fast, and suitable for rather high torques. A large selection of cost-efficient driving elements in Taper version are available ex stock:

- Taper clamping bushes
- Welding hubs for taper bushes
- Taper sprockets
- Taper V-belt pulleys
- Taper pulleys
- Taper couplings.



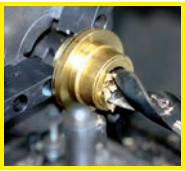

Reworking within 24h-service possible. Custom made parts on request.

Worms and Worm Gears, General Basics and Overview



General descriptions:

- For right angled power transmission with simultaneous vertical offset (centre distance of the crossed axles).
- The movement usually takes places via the worm (the movement can be made via the gear wheel if necessary in the case of low transmissions up to 3:1).
- The selection/dimensioning is made as function of the torque (required torque on the worm gears).
- High transmissions up to approx. 100:1 are possible in just one stage.
- Several transmissions and centre distances on stock.
- Silent and low vibration.
- Power loss is greater than in spur and bevel gears, depending on the efficiency or transmission.
- Power loss is converted to frictional heat.
- Low transmission = higher efficiency and lower self-locking.
- High transmission = low efficiency and high self-locking.

Standard Worm Gears and Worm shafts page 286 - 293

For simple applications, e.g. manual operation or occasional motorised operation. Continuous operation is possible at medium torques. Reworking (custom bore, feather keyway, fixed thread) is an optional extra.
Single thread: For high to medium transmissions.
Double thread: For medium to low transmissions.

Sorted by number of threads and module. The gear wheels can be combined with worms having the same module and the same number of threads to make different transmissions. This results in the different centre distances.

Single thread, right hand		Page
Module 0.5 to 2.0	Worm Gears	286
	Worms	287
Module 3.0 to 5.0	Worm Gears	288
	Worms	289
Double thread, right hand		**Page**
Module 0.5 to 2.0	Worm Gears	290
	Worms	291
Module 3.0 to 4.0	Worm Gears	292
	Worms	293

Precision worm gear sets page 295 - 304

Ideal for continuous operation at high speeds and torques. Mostly ready-to install without needing reworking. Hence they are also economical for simple applications.

Sorted by centre distance. The gear wheels can only be used with worms having the same centre distance and the same transmission. Several transmissions are available per centre distance.

Centre distance	Page	Centre distance	Page
17 mm	295	50 mm	300
22,62 mm	296	53 mm	300
25 mm	296	63 mm	301
31 mm	297	65 mm	301
33 mm	298	80 mm	302
35 mm	299	100 mm	303
40 mm	299	125 mm	304

Gear Set, Right Hand

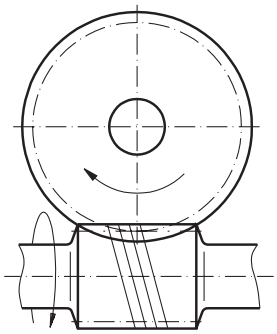

The catalogue parts are right handed.

Left hand sets have to be custom made on request.

Recommendation regarding the Lubrication

Peripheral Speed	Lubrication	Lubricant
up to 1 m/s (gear submerged)	Dip-Feed Lubrication	Grease
up to 4 m/s (gear submerged)	Dip-Feed Lubrication	Oil
over 4 m/s (gear submerged)	Spray lubrication	Oil
up to 4 m/s (worm submerged)	Dip-Feed Lubrication	Grease
up to 10 m/s (worm submerged)	Dip-Feed Lubrication	Oil
over 10 m/s (worm submerged)	Spray lubrication	Oil

Efficiency and self-locking

The calculated efficiency depends on the friction conditions in the contact zone and where the bearings and seal are mounted. These conditions may vary depending on the environmental conditions or lubrication. This leads to a large array, where no exact statement regarding the self-locking capacity can be made. This array is marked with "limited".

A calculated self-locking capacity can be negatively influenced by various factors. For this reason we cannot grant any guarantee regarding the self-locking capacity.

Maximum Torque

The torque values are to be taken as Maximum Values that should under no circumstances be exceeded!
Depending on the power of the gear unit , the prevailing temperature and lubrication conditions in the worm gear unit (depending on the cooling , lubricant, mounting etc.) operating set ups with increasing wear may occur - having a negative influence on the wear lifespan of the unit - although the permissible torques were not exceeded. In order to go to the upper limit of the maximum torques, the whole construction must have a rigid design (housing, bearing, bearing distance), to avoid negative influences due to deformation.

The stated torques were calculated presuming an alternating load. They are output torques (of the worm gear, not the worm shaft).

Torque Conversion

Output torque = Input Torque x Efficiency x Transmission

$$\text{Input torque} = \frac{\text{Output torque}}{\text{Efficiency x Ratio}}$$

Worm dimensions

to be calculated	given unit	formula
Reference Circle Pitch = t_s	Lead and Number of Gears	$\frac{H}{z}$
Standard pitch = t_{no}	Pitch and Lead Angle	$t_s \cdot \cos \gamma_m$
Real module = m_s	Reference Circle Pitch	$\frac{t_s}{\pi}$
Standard module = m_n	Standard pitch	$\frac{t_n}{\pi}$
med. lead angle = γ_m	Lead and Pitch Ø	$\tan \gamma_m = \frac{H}{d \cdot \pi}$
Pitch Ø = d	Lead and Lead Angle	$\frac{H}{\pi \cdot \tan \gamma_m}$
Tip Ø = d_a	Pitch Ø and Standard Module	$d + 2m_n$
Lead = H	Number of Gears and Real Module	$z \cdot m_s \cdot \pi$

Worm Gear - Dimensions and Torque

to be calculated	given unit	formula
Pitch Ø = d		$z \cdot m_s$
Tip Ø = d_a in Median Plane of Gear		$\approx d + 2\ m_s$
Output torque = Md in Nm		$9550 \cdot \frac{P_2}{n_2}$

Material quality:
Information about the material quality can be found at each worm and worm gear.

Note Regarding the Torque-Values Stated in the Catalogue page 286 bis 293

The worm gear sets are calculated in accordance with DIN 3976 or Niemann/Winter (Niemann/Winter "Maschinenelemente Band III, 2. Auflage, Nachdruck 1986", Machine Components Volume III, 2nd Edition, Reprint 1986 , Publisher: Springer-Verlag).
The decisive strength criterion for small modules is the pitting resistance of the worm gear flanks and for larger modules usually the tooth-root strength of the worm gear.

Calcul. Factor/Determining Factor	Value	Note
Tooth root safety S_F	min. 2.0	–
Flank safety S_H	min. 1.3	Endurance strength 10,000 h
Application factor K_A	1.25	Industrial gear mechanisms, uniform, light shocks

The following permissible Hertzian stress was assumed for the materials used:

Material	permissible flank pressure s_{Hlim} in N/mm²	Maximum Limit Stress before Tooth Fracture U_{lim} in N/mm²
G-CuSn12	265	115
GG25	350	150

The load bearing capacity of a worm gear depends on various different factors. The stated torques are only reference values, serving to facilitate the selection process. If necessary a specific calculation of strength and load bearing capacity must be carried out for each application.

Depending on the operating conditions, the wear lifespan may be influenced by grease/oil lubrication. Please also note that insufficient lubrication may lead to scuffing of the gear flanks.

IMPORTANT: The torque values stated refer to the permissible output torques (of the worm gear).

Worm Gears Made from Bronze (G-CuSn12) with Hollow Teeth, Single-Thread, Right Hand

Single-thread worm gears to be paired with single-thread worms page 287. If the module (and number of threads) are matching, various ratios at various axle distances can be realized.

With one-sided hub up to Module 1.
With double-sided hub from Module 1.5.

Pressure angle 20°.

Efficiency: Module 0.5: approx. 0.53.
Module 0.75: approx. 0.58.
Module 1: approx. 0.53.
Module 1.5: approx. 0.49.
Module 2: approx. 0.50.

Self-locking capacity:
Module 0.5 and 0.75 limited self-locking capacity. Other versions not self-locking.

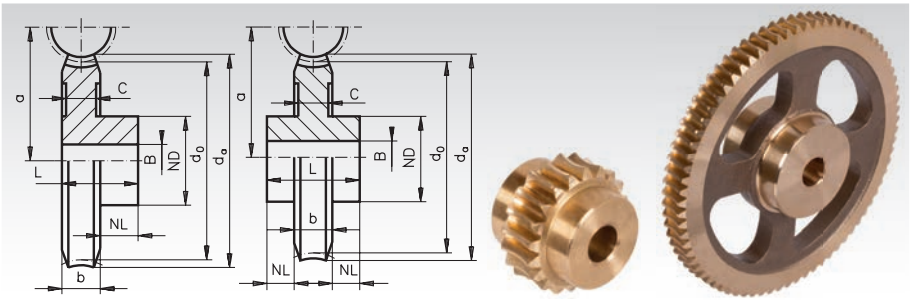

Ordering Details: e.g.: Product No. 300 007 00, Worm Gear Bronze, Module 0.5, 20 Teeth, Single-Thread, Right Hand

	Product No.	Number of Teeth	Transm. Ratio	d_0 mm	d_a mm	ND mm	NL mm	b mm	L mm	C* mm	a mm	B^{H7} mm	perm. MT** Nm	Weight g
Module 0.5	**300 007 00**	20	20 : 1	10,0	11,2	8	5	3	8	-	8,5	3	0,13	3
	300 010 00	25	25 : 1	12,5	13,7	10	5	3	8	-	9,75	4	0,24	6
	300 020 00	50	50 : 1	25	26,2	10	5	3	8	-	16	4	0,87	16
	300 030 00	75	75 : 1	37,5	38,7	15	5	3	8	-	22,25	4	1,30	36
	300 032 00	100	100 : 1	50	51,2	15	5	3	8	-	28,5	5	1,73	60
Module 0.75	**300 307 00**	20	20 : 1	15	16,7	10	6	3	9	-	11,75	4	0,35	8
	300 310 00	25	25 : 1	18,75	20,4	12	6	3	9	-	13,62	4	0,59	13
	300 320 00	50	50 : 1	37,5	39,2	12	6	3	9	-	23	4	2,70	35
	300 330 00	75	75 : 1	56,25	57,9	15	6	3	9	-	32,37	4	4,10	73
	300 332 00	100	100 : 1	75	76,7	15	6	3	9	-	41,75	5	5,40	123
Module 1.0	**300 605 00**	16	16 : 1	16	18,8	12	8	6,5	14,5	-	15	5	0,29	16
	300 606 00	18	18 : 1	18	20,8	12	8	6,5	14,5	-	16	5	0,40	20
	300 607 00	20	20 : 1	20	22,8	16	8	6,5	14,5	-	17	5	0,52	30
	300 610 00	25	25 : 1	25	27,8	16	8	6,5	14,5	-	19,5	5	0,94	40
	300 615 00	35	35 : 1	35	37,8	16	10	6,5	16,5	-	24,5	6	2,40	70
	300 620 00	50	50 : 1	50	52,8	20	10	6,5	16,5	-	32	6	6,90	140
	300 630 00	75	75 : 1	75	77,8	30	10	6,5	16,5	4,5	44,5	6	14,60	200
	300 632 00	100	100 : 1	100	102,8	30	12	6,5	18,5	4,5	57	6	19,40	480
	300 635 00	125	125 : 1	125	127,8	40	12	6,5	18,5	4,5	69,5	8	24,10	580
	300 640 00	150	150 : 1	150	152,8	40	12	6,5	18,5	4,5	82	8	28,90	590
Module 1.5	**301 005 00**	16	16 : 1	24	28,4	18	6/6	12	24	-	24,5	8	1,33	60
	301 006 00	18	18 : 1	27	31,7	20	8/8	12	28	-	26	8	1,80	80
	301 007 00	20	20 : 1	30	34,7	25	8/8	12	28	-	27,5	10	2,30	130
	301 013 00	30	30 : 1	45	49,7	30	8/8	12	28	-	35	10	6,60	260
	301 018 00	40	40 : 1	60	64,7	30	10/10	12	32	-	42,5	10	14,80	400
	301 020 00	50	50 : 1	75	79,7	30	10/10	12	32	10	50	10	25,00	440
	301 030 00	75	75 : 1	112,5	117,2	40	10/10	12	32	10	68,75	12	37,00	860
	301 032 00	100	100 : 1	150	154,7	45	10/10	12	32	10	87,5	12	49,00	1300
Module 2.0	**301 305 00**	16	16 : 1	32	37,6	20	8/8	14	30	-	32	8	5,20	140
	301 306 00	18	18 : 1	36	41,6	25	8/8	14	30	-	34	10	7,00	250
	301 307 00	20	20 : 1	40	45,6	30	10/10	14	34	-	36	12	9,10	260
	301 313 00	30	30 : 1	60	65,6	40	10/10	14	34	-	46	12	26,40	600
	301 318 00	40	40 : 1	80	85,6	40	10/10	14	34	11	56	12	47,00	650
	301 320 00	50	50 : 1	100	105,6	40	10/10	14	34	11	66	12	58,30	760
	301 324 00	60	60 : 1	120	125,6	50	10/10	14	34	11	76	12	69,50	1200

*Depending on the blanks, worm gears are supplied with or without dimension C!

** Basis of calculations see page 285.



Reworking within 24h-service possible. Custom made parts on request.

Hollow Worms and Worm Shafts Single-Thread, Right Hand

Single-thread worms to be paired with single-thread worm gears page 286. If the module (and number of threads) are matching, various ratios at various axle distances can be realized. (see table page 286).

Hollow Worms, Milled, Made from Steel (11SMnPb30), Single-Thread, Right Hand

Pressure angle 20°.

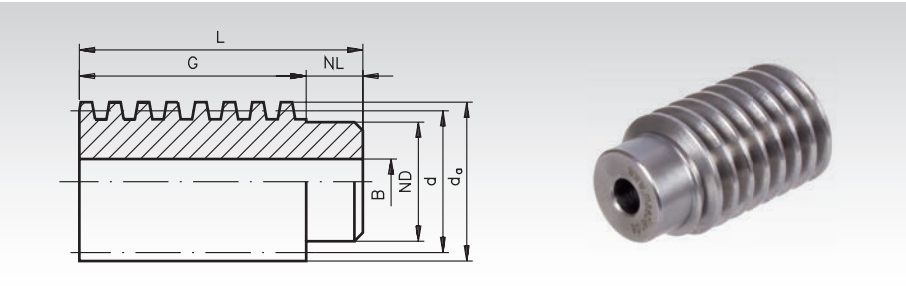

Ordering Details: e.g.: Product No. 300 000 00, Worm, 11SMnPb30, Module 0.5, Single Thread, Right Hand

	Product No.	d mm	d_a mm	ND mm	NL mm	G mm	L mm	B^{H7} mm	Weight g
Module 0.5	300 000 00	7	8	5,5	4	12	16	3	4
Module 0.75	300 300 00	8,5	10	6	4	16	20	4	6
Module 1.0	300 600 00	14	16	11	6	24	30	6	26
Module 1.5	301 000 00	25	28	21	10	40	50	8	160
Module 2.0	301 300 00	32	36	25	10	45	55	8	300

Worm Shafts Milled, with Centring Hole, Made from Steel (11SMnPb30), Single-Thread, Right Hand

Pressure angle 20°.

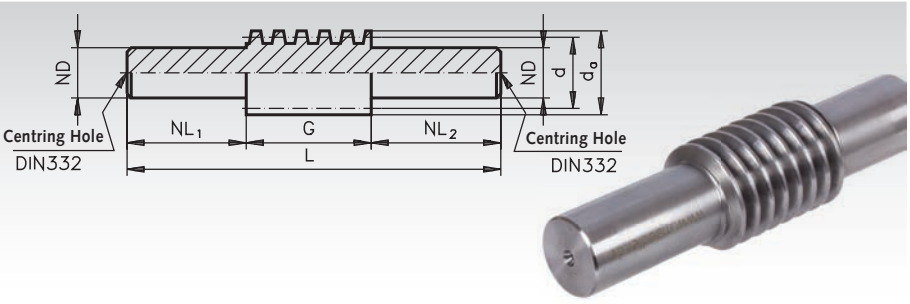

Ordering Details: e.g.: Product No. 300 001 00, Worm Shaft, 11SMnPb30, Module 0.5, Single Thread, Right Hand

	Product No.	d mm	d_a mm	ND $^{+0,2}_{+0,4}$ mm	NL_1 mm	G mm	NL_2 mm	L mm	Weight g
Module 0.5	300 001 00	7	8	5,5	18	12	10	40	9
Module 0.75	300 301 00	8,5	10	6	20	16	15	51	15
Module 1.0	300 601 00	14	16	10	30	24	20	74	60
Module 1.5	301 001 00	25	28	20	40	40	30	110	300
Module 2.0	301 301 00	32	36	25	50	45	36	131	620



Reworking within 24h-service possible. Custom made parts on request.

Worm Gears Made from Cast Iron (GG25) with Hollow Teeth, Single-Thread, Right Hand

Single-thread worm gears to be paired with single-thread worms page 289. If the module (and number of threads) are matching, various ratios at various axle distances can be realized.

Pressure angle 20°.

Efficiency: Module 3: approx. 0.46.
Module 4: approx. 0.48.
Module 5: approx. 0.49.
Module 6: approx. 0.46.

Self-locking capacity: not self-locking.

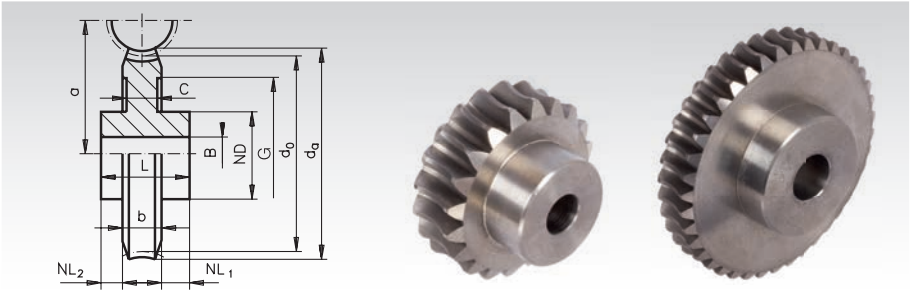

Ordering Details: e.g.: Product No. 310 005 00, worm gear, GG25, Module 3, 16 Teeth, Single Thread, Right Hand

	Prouct No.	Number of teeth	Transm. Ratio	d_0 mm	d_a mm	ND mm	NL_1/NL_2 mm	b mm	L mm	G mm	C* mm	a mm	B^{H7} mm	perm. MT** Nm	Weight kg
Module 3.0	**310 005 00**	16	16 : 1	48	57	40	18/4	24	46	-	-	43	15	22	0,46
	310 006 00	18	18 : 1	54	63	40	18/4	24	46	-	-	46	15	27	0,55
	310 007 00	20	20 : 1	60	69	40	18/4	24	46	-	-	49	15	36	0,64
	310 011 00	26	26 : 1	78	87	45	18/4	24	46	60	12	58	18	73	1,20
	310 014 00	32	32 : 1	96	105	50	18/4	24	46	70	12	67	20	132	1,40
	310 018 00	40	40 : 1	120	129	65	18/4	24	46	90	12	79	25	189	2,20
	310 021 00	52	52 : 1	156	165	75	23/4	24	51	116	12	97	30	242	3,40
	310 026 00	65	65 : 1	195	204	85	23/4	24	51	150	12	116,5	35	305	4,90
Module 4.0	**310 305 00**	16	16 : 1	64	76	50	21/5	34	60	-	-	57	20	30	1,00
	310 306 00	18	18 : 1	72	84	50	21/5	34	60	-	-	61	20	42	1,50
	310 307 00	20	20 : 1	80	92	50	21/5	34	60	-	-	65	20	50	1,60
	310 311 00	26	26 : 1	104	116	55	21/5	34	60	80	14	77	22	102	2,10
	310 314 00	32	32 : 1	128	140	65	21/5	34	60	90	14	89	25	185	3,40
	310 318 00	40	40 : 1	160	172	75	21/5	34	60	125	14	105	30	355	4,50
	310 321 00	52	52 : 1	208	220	85	26/5	34	65	175	14	129	35	585	6,70
	310 326 00	65	65 : 1	260	272	100	26/5	34	65	225	14	155	40	735	9,50
Module 5.0	**310 605 00**	16	16 : 1	80	95	70	27/5	40	72	-	-	71	20	93	2,30
	310 611 00	26	26 : 1	130	145	70	27/5	40	72	99	16	96	28	343	4,20
	310 614 00	32	32 : 1	160	175	75	27/5	40	72	125	16	111	30	620	5,30
	310 618 00	40	40 : 1	200	215	85	27/5	40	72	160	16	131	35	874	7,40
	310 621 00	52	52 : 1	260	275	100	32/5	40	77	220	16	161	40	1135	11,80
	310 626 00	65	65 : 1	325	340	115	32/5	40	77	280	16	193,5	45	1420	17,00

*Depending on the blanks, worm gears are supplied with or without dimension C!

** Basis of calculations see page 285.



Reworking within 24h-service possible. Custom made parts on request.

Hollow Worms and Worm Shafts Single-Thread, Right Hand

Single-thread worms to be paired with single-thread worm gears page 288. If the module (and number of threads) are matching, various ratios at various axle distances can be realized (see table page 288).

Hollow Worms, Whirled, Made from Steel (C45), Single-Thread, Right Hand

Pressure angle 20°.

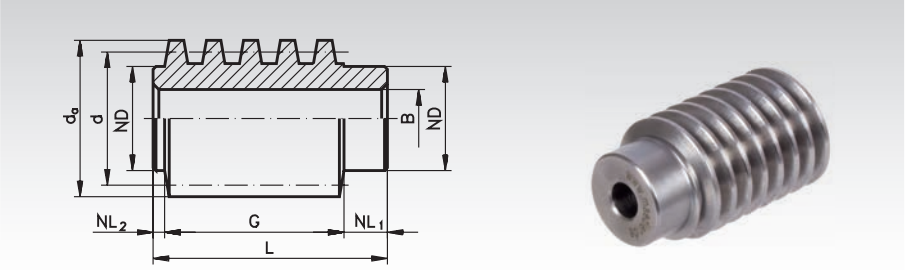

Ordering Details: e.g.: Product No. 310 000 00, Worm, Steel, Module 3, Single Thread, Right Hand

	Product No.	d mm	d_a mm	ND mm	NL_1 mm	G mm	NL_2 mm	L mm	B^{H7} mm	Weight kg
Module 3.0	**310 000 00**	38	44	30	12	46	3	61	15	0,4
Module 4.0	**310 300 00**	50	58	40	15	62	4	81	20	1,2
Module 5.0	**310 600 00**	62	72	50	18	80	5	103	25	1,8

Worm Shafts, Whirled, with Centring Hole, Made from Steel (C45), Single-Thread, Right Hand

Pressure angle 20°.

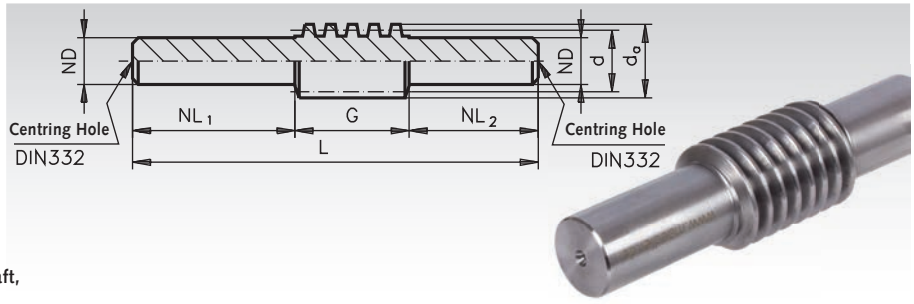

Ordering Details: e.g.: Product No. 310 001 00, Worm Shaft, 11 SMnPb30, Module 3, Single Thread, Right Hand

	Product No.	d mm	d_a mm	ND $^{+0,2}_{+0,4}$ mm	NL_1 mm	G mm	NL_2 mm	L mm	Weight kg
Module 3.0	**310 001 00**	38	44	30	130	46	90	266	1,6
Module 4.0	**310 301 00**	50	58	40	175	62	120	357	3,8
Module 5.0	**310 601 00**	62	72	50	220	80	150	450	7,6



Reworking within 24h-service possible. Custom made parts on request.

Worm Gears Made from Bronze (G-CuSn12), with Hollow Teeth, Double-Thread, Right Hand

Worm gears with double thread matching the double-thread worms page 291. If the module (and number of threads) are matching, various ratios at various axle distances can be realized.

With one-sided hub up to Module 1.
With double-sided hub from Module 1.5.

Pressure angle 20°.

Efficiency:
Module 0.5: approx. 0.69.
Module 0.75: approx. 0.73.
Module 1: approx. 0.69.
Module 1.5: approx. 0.49/0.65.
Module 2: approx. 0.66.

Self-locking capacity: Module 0.5 and 0.75 limited self-locking capacity.
Other versions not self-locking.

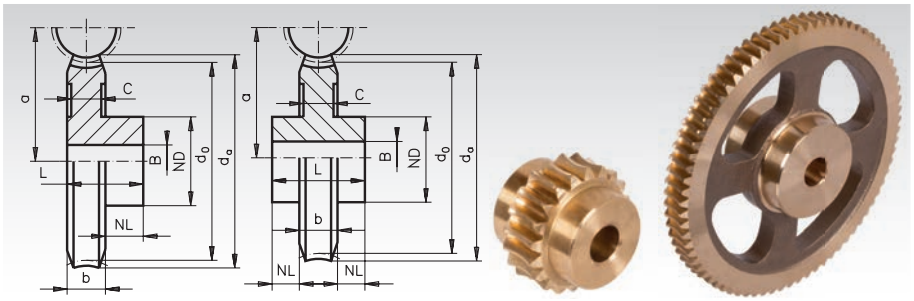

Ordering Details: e.g.: Product No. 300 207 00, Worm Gear, Bronze, Module 0.5, 20 Teeth, Double Thread, Right Hand

	Product No.	Number of Teeth	Transm. Ratio	d_0 mm	d_a mm	ND mm	NL mm	b mm	L mm	C* mm	a mm	B^{H7} mm	perm. MT** Nm	Weight g
Module 0.5	**300 207 00**	20	10,0 : 1	10,0	11,2	8	5	3	8	-	8,5	3	0,06	3
	300 210 00	25	12,5 : 1	12,5	13,7	10	5	3	8	-	9,75	4	0,10	6
	300 220 00	50	25 : 1	25	26,2	10	5	3	8	-	16	4	0,75	16
	300 230 00	75	37,5 : 1	37,5	38,7	15	5	3	8	-	22,25	4	11,30	36
Module 0.75	**300 507 00**	20	10 : 1	15	16,7	10	6	3	9	-	11,75	4	0,14	8
	300 510 00	25	12,5 : 1	18,75	20,4	12	6	3	9	-	13,62	4	0,25	13
	300 520 00	50	25 : 1	37,5	39,2	12	6	3	9	-	23	4	2,00	35
	300 530 00	75	37,5 : 1	56,25	57,9	15	6	3	9	-	32,37	4	4,10	73
Module 1.0	**300 805 00**	16	8 : 1	16	18,8	12	8	6,5	14,5	-	15	5	0,14	16
	300 806 00	18	9 : 1	18	20,8	12	8	6,5	14,5	-	16	5	0,17	20
	300 807 00	20	10 : 1	20	22,8	16	8	6,5	14,5	-	17	5	0,24	30
	300 810 00	25	12,5 : 1	25	27,8	16	8	6,5	14,5	-	19,5	5	0,40	40
	300 815 00	35	17,5 : 1	35	37,8	16	10	6,5	16,5	-	24,5	6	1,10	70
	300 820 00	50	25 : 1	50	52,8	20	10	6,5	16,5	-	32	6	2,90	140
	300 830 00	75	37,5 : 1	75	77,8	30	10	6,5	16,5	4,5	44,5	6	10,50	200
	300 832 00	100	50 : 1	100	102,8	30	12	6,5	18,5	4,5	57	6	19,40	480
Module 1.5	**301 205 00**	16	8 : 1	24	28,4	18	6/6	12	24	-	24,5	8	0,60	60
	301 206 00	18	9 : 1	27	31,7	20	8/8	12	28	-	26	8	0,70	80
	301 207 00	20	10 : 1	30	34,7	25	8/8	12	28	-	27,5	10	1,10	130
	301 213 00	30	15 : 1	45	49,7	30	8/8	12	28	-	35	10	2,80	260
	301 218 00	40	20 : 1	60	64,7	30	10/10	12	32	-	42,5	10	6,90	400
	301 220 00	50	25 : 1	75	79,7	30	10/10	12	32	10	50	10	12,10	440
	301 232 00	100	50 : 1	150	154,7	45	10/10	12	32	10	87,5	12	49,00	1300
Module 2.0	**301 505 00**	16	8 : 1	32	37,6	20	8/8	14	30	-	32	8	2,40	140
	301 506 00	18	9 : 1	36	41,6	25	8/8	14	30	-	34	10	3,00	250
	301 507 00	20	10 : 1	40	45,6	30	10/10	14	34	-	36	12	4,10	260
	301 513 00	30	15 : 1	60	65,6	40	10/10	14	34	-	46	12	11,20	600
	301 518 00	40	20 : 1	80	85,6	40	10/10	14	34	11	56	12	26,80	650
	301 520 00	50	25 : 1	100	105,6	40	10/10	14	34	11	66	12	48,90	760
	301 524 00	60	30 : 1	120	125,6	50	10/10	14	34	11	76	12	69,50	1200

* Depending on the blanks, worm gears are supplied with or without dimension C!

** Basis of calculations see page 285.



Reworking within 24h-service possible. Custom made parts on request.

Hollow Worms and Worm Shafts, Double-Thread, Right Hand

Double-thread worms to be paired with single-thread worm gears page 290. If the module (and number of threads) are matching, various ratios at various axle distances can be realized (see table page 290).

Hollow Worms, Whirled, Made from Steel (C45), Double-Thread, Right Hand

Pressure angle 20°.

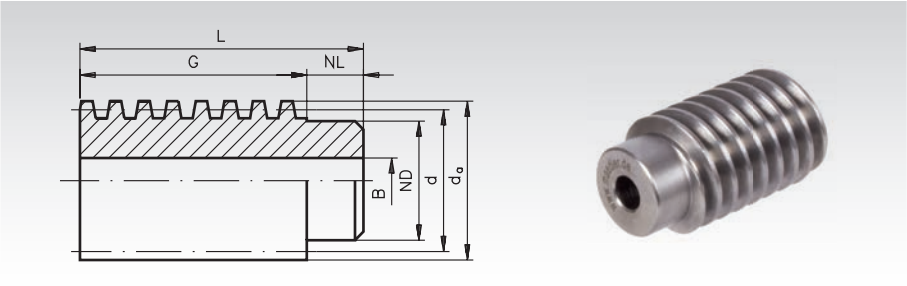

Ordering Details: e.g.: Product No. 300 200 00, Worm, 11SMnPb30, Module 0.5, Double-Thread, Right Hand

	Product No.	d mm	d_a mm	ND mm	NL mm	G mm	L mm	B^{H7} mm	Weight g
Module 0.5	300 200 00	7	8	5,5	4	12	16	3	4
Module 0.75	300 500 00	8,5	10	6	4	16	20	4	6
Module 1.0	300 800 00	14	16	11	6	24	30	6	26
Module 1.5	301 200 00	25	28	21	10	40	50	8	160
Module 2.0	301 500 00	32	36	25	10	45	55	8	300

Worm Shafts, Whirled, with Centring Hole, Made from Steel (C45), Double-Thread, Right Hand

Pressure angle 20°.

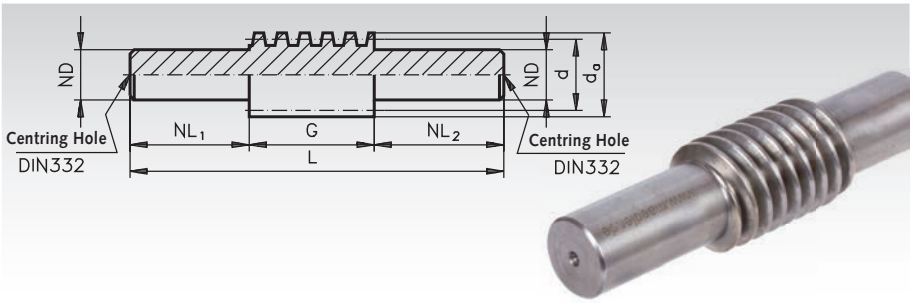

Ordering Details: e.g.: Product No. 300 201 00, Worm Shaft, 11SMnPb30, Module 0.5, Double-Thread, Right Hand

	Product No.	d mm	d_a mm	$ND^{+0,2}_{+0,4}$ mm	NL_1 mm	G mm	NL_2 mm	L mm	Weight g
Module 0.5	300 201 00	7	8	5,5	18	12	10	40	9
Module 0.75	300 501 00	8,5	10	6	20	16	15	51	15
Module 1.0	300 801 00	14	16	10	30	24	20	74	60
Module 1.5	301 201 00	25	28	20	40	40	30	110	300
Module 2.0	301 501 00	32	36	25	50	45	36	131	620



Reworking within 24h-service possible. Custom made parts on request.

Worm Gears Made from Cast Iron (GG25), with Hollow Teeth, Double Thread, Right Hand

Double-threaded worm gears to be paired with double-threaded worms page 293. If the module (and number of threads) are matching, various ratios at various axle distances can be realized.

Pressure angle 20°.

Efficiency: Module 3 approx. 0.66.
Module 4 approx. 0.67.
Module 5 approx. 0.68.
Module 6 approx. 0.65.

Self-locking capacity: not self-locking.

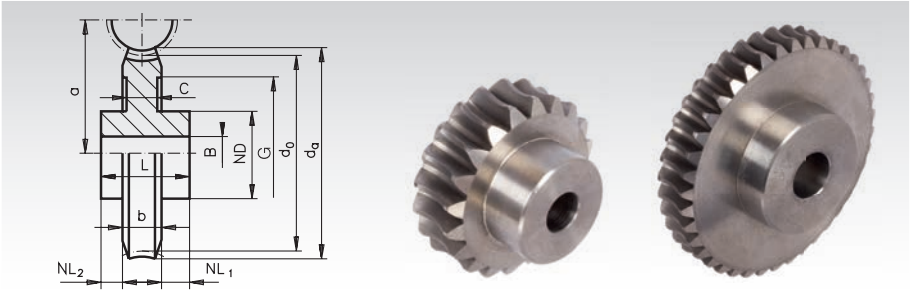

Ordering Details: e.g.: Product No. 310 205 00, Worm gear, GG25, Module 3, 16 Teeth, Double-Thread, Right Hand

	Product No.	Number of Teeth	Transm. Ratio	d_0 mm	d_a mm	ND mm	NL_1/NL_2 mm	b mm	L mm	G mm	C* mm	a mm	B^{H7} mm	perm. MT** Nm	Weight kg
Module 3.0	**310 205 00**	16	8 : 1	48	57	40	18/4	24	46	-	-	43	15	9	0,46
	310 207 00	20	10 : 1	60	69	40	18/4	24	46	-	-	49	15	16	0,64
	310 211 00	26	13 : 1	78	87	45	18/4	24	46	60	12	58	18	31	1,20
	310 214 00	32	16 : 1	96	105	50	18/4	24	46	70	12	67	20	60	1,40
	310 221 00	52	26 : 1	156	165	75	23/4	24	51	116	12	97	30	242	3,40
	310 226 00	65	32,5 : 1	195	204	85	23/4	24	51	150	12	116,5	35	305	4,90
Module 4.0	**310 505 00**	16	8 : 1	64	76	50	21/5	34	60	-	-	57	20	13	1,00
	310 507 00	20	10 : 1	80	92	50	21/5	34	60	-	-	65	20	21	1,60
	310 511 00	26	13 : 1	104	116	55	21/5	34	60	80	14	77	22	48	2,10

*Depending on the blanks, worm gears are supplied with or without dimension C!

** Basis of calculations see page 285.



Reworking within 24h-service possible. Custom made parts on request.

Hollow Worms and Worm Shafts Double-Thread, Right Hand

Double-threaded worms to be paired with double-threaded worm gears page 292. If the module (and number of threads) are match various ratios at various axle distances can be realized (see table page 292).

Hollow Worms, Whirled, Made from Steel (C45), Double-Thread, Right Hand

Pressure angle 20°.

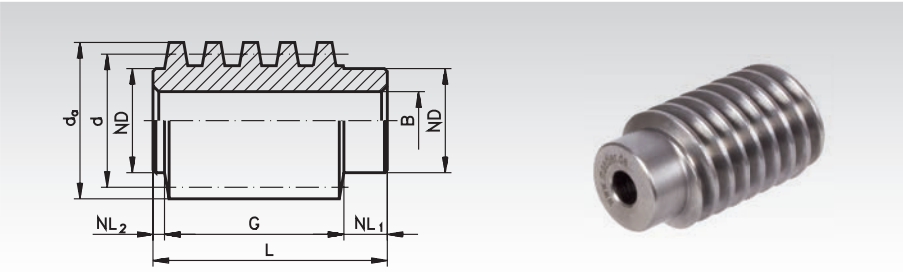

Ordering Details: e.g.: Product No. 310 200 00, Worm, Steel, Module 3, Double-Thread, Right Hand

	Product No.	d mm	d_a mm	ND mm	NL_1 mm	G mm	NL_2 mm	L mm	B^{H7} mm	Weight kg
Module 3.0	**310 200 00**	38	44	30	12	46	3	61	15	0,4
Module 4.0	**310 500 00**	50	58	40	15	62	4	81	20	1,2

Worm Shafts, Whirled, with Centring Hole, Made from Steel (C45), Double-Thread, Right Hand

Pressure angle 20°.

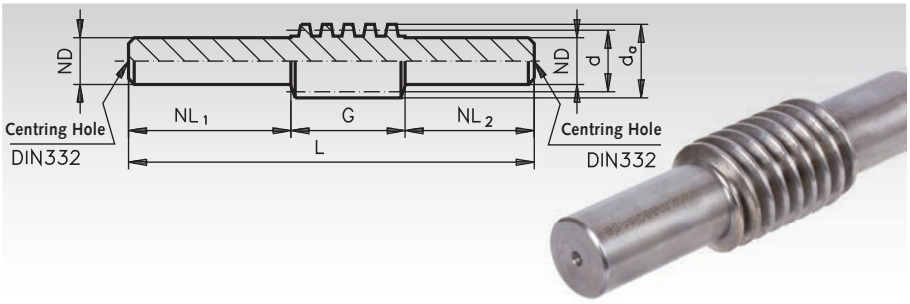

Ordering Details: e.g.: Product No. 310 201 00, Worm Shaft, 11SMnPb30, Module 3, Double-Thread, Right Hand

	Product No.	d mm	d_a mm	ND $^{+0,2}_{+0,4}$ mm	NL_1 mm	G mm	NL_2 mm	L mm	Weight kg
Module 3.0	**310 201 00**	38	44	30	130	46	90	266	1,6
Module 4.0	**310 501 00**	50	58	40	175	62	120	357	3,8



Reworking within 24h-service possible. Custom made parts on request.

Note regarding the Precision Worm-Gear Sets page 295 to 302

Worm gears up to a centre distance of 65 mm are made from special brass CuZn40Al2/So, above made from bronze G-CuSn12 Ni.

Worms made from 11SMnPb30, inspected for fissures, case hardened or C45 induction hardened, hardness HV620-700, shafts (if used), bore and flanks ground.

Pressure angle 15° (to reduce the radial force at the worm shaft). Especially designed for use with high torques, ready bored and some with keyway.

IMPORTANT:
Some of the keyways are not in accordance with the DIN. Please take good note of the keywidth stated.

The stated torques are permissible driving torques for the worm gear, permissible at a speed of 2800 min^{-1} at the worm shaft. The calculations are based on an expected service life of 3,000 h. With lower torques, or a shorter expected service life, the driving torque can be increased. The factor of security against rapture is 3.

The given torques are valid for shock-free drive, 10 starts per hour, operating time up to 40% and sufficient lubrication with mineral low-viscosity grease. Viscous synthetic oil should, however be preferred. The figures for efficiency stated in the table are theoretical values that can be negatively influenced by various factors.

For that reason we do not offer any guarantee regarding the efficiency and the self-locking capacity.

Precision Worm Gear Sets, Flank Clearance at Centre Distance a = 17 - 100 mm

Flank-clearance tolerances for worm gears are only valid for gears with a pressure angle of 15°.

Reference Diameter of the Worm Gear d_{m2}	Module m_n	Clearance at Centre Distance S_{a2}		Tolerance	Engagement Backlash S_{e2}		Circumferential Backlash at Pitch Ø with γ_o up to 24°		with γ_o above 25°	
		min.	max.		min.	max.	min.	max.	min.	max.
mm	mm	mm	mm	mm	mm	mm	mm	mm	mm	mm
over 12 up to 25	0,4 - 0,6	0,13	0,172	0,042	0,067	0,089	0,07	0,092	0,077	0,102
	>0,6 - 1,3	0,14	0,185	0,045	0,072	0,096	0,075	0,099	0,083	0,109
	>1,3 - 2,0	0,15	0,198	0,048	0,078	0,102	0,08	0,106	0,089	0,117
over 25 up to 50	0,4 - 0,6	0,14	0,185	0,045			0,075	0,099	0,083	0,108
	>0,6 - 1,3	0,15	0,198	0,048			0,08	0,106	0,089	0,117
	>1,3 - 2,0	0,16	0,212	0,052	0,083	0,11	0,086	0,114	0,095	0,125
	>2,0 - 4,0	0,17	0,231	0,056	0,091	0,12	0,094	0,124	0,103	0,137
over 50 up to 100	0,4 - 0,6	0,15	0,198	0,048			0,08	0,106	0,089	0,117
	>0,6 - 1,3	0,16	0,212	0,052			0,086	0,114	0,095	0,125
	>1,3 - 2,0	0,175	0,231	0,056			0,094	0,124	0,103	0,137
	>2,0 - 4,0	0,19	0,25	0,06	0,098	0,129	0,102	0,134	0,112	0,148

γ_o is the lead angle of the worm.

Self-locking capacity

The self-locking capacity is influenced by the lead angle, the surface structure of the flanks, the sliding speed, the lubricant and the heating. Dynamic and static self-locking capacity must be distinguished.

Dynamic self-locking capacity: up to 3° lead angle lubricated with grease; up to 2.5° lead angle lubricated with synthetic oils.
Static self-locking capacity: from 3° up to 5° lead angle lubricated with grease; from 2.5° up to 4.5° lead angle lubricated with synthetic oils.
With lead angles of 4.5° or 5° there is no self-locking capacity.

Shocks or vibration can override the self-locking capacity. Apart from that, various factors in connection with lubrication, gliding speed and load can create such favourable operating conditions that the self-locking capacity is negatively influenced.

For this reason we cannot grant any guarantee regarding the self-locking capacity.


Reworking within 24h-service possible. Custom made parts on request.

Precision Worm Gear Sets - Right Hand (Worm Gears and Hollow Worms)

Pressure angle 15°.
Material:
Worm gear: special brass CuZn40Al2/So.
Worm: 11SMnPb30, inspected for fissures, case hardened HV620-700, ground.
Can be built into gear systems, no reworking required, thus short assembly times.

Ordering Details: e.g.:
Product No. 320 002 00, Prec. Worm Gear A 17
Product No. 320 102 00, Prec. Worm A 17

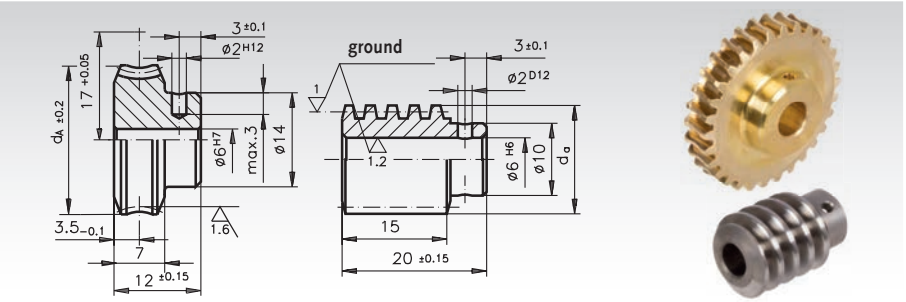

Centre Distance in Casing 17 mm + 0.05

Product No. Worm Gear	Product No. Worm	Transmission	Module	No. of Teeth	No. of Threads	Lead Angle	Worm Gear d_A ± 0.2 mm	Worm d_a mm	Maximum Torque at 2800min^{-1} Nm	*** η	Weight Worm Gear g	Weight Worm g
320 002 00	**320 102 00**	*2,25 : 1	0,9	18	8	48° 15′	25,63	11,95	1,1	0,80	25	7
320 004 00	**320 104 00**	4,5 : 1	0,75	27	6	21° 50′	24,60	13,60	1,7	0,75	25	11
320 005 00	**320 105 00**	5 : 1	0,7	30	6	21° 37′	24,60	12,80	1,8	0,74	26	12
320 007 00	**320 107 00**	7 : 1	1,0	21	3	14° 4′	24,60	14,34	1,6	0,68	25	12
320 009 00	**320 109 00**	9 : 1	0,75	27	3	9° 40′	22,70	14,90	1,5	0,61	23	14
320 010 00	**320 110 00**	10 : 1	0,75	30	3	11° 48′	24,60	12,50	1,9	0,64	27	9
320 015 00	**320 115 00**	15 : 1	0,75	30	2	7° 38′	24,60	12,80	1,9	0,54	26	10
320 025 00	**320 125 00**	25 : 1	0,9	25	1	4° 32′	24,60	13,20	1,8	0,42	26	10
320 030 00	**320 130 00**	30 : 1	0,75	30	1	3° 45′	24,60	12,95	1,9	0,37	26	10
320 040 00	**320 140 00**	40 : 1	0,5	40	1	2° 3′	21,60	14,98	1,4	0,26	22	16
320 050 00	**320 150 00**	**50 : 1	0,5	50	1	3° 12′	27,20	9,95	1,0	0,33	32	5
320 060 00	**320 160 00**	60 : 1	0,4	60	1	2° 18′	26,00	10,75	1,6	0,26	30	8
320 075 00	**320 175 00**	75 : 1	0,3	75	1	1° 28′	24,00	12,34	1,3	0,19	26	10
320 080 00	**320 180 00**	80 : 1	0,3	80	1	1° 43′	26,00	10,60	1,4	0,21	30	10

* Worm only polished, worm gear with helical gearing.
** Worm with 9 mm hub diameter only.
*** The figures stated for the efficiency are only reference values, since - besides the lead angle - mounting, lubrication, speed and assembly also have an influence on the efficiency.



Reworking within 24h-service possible. Custom made parts on request.

Precision Worm Gear Sets - Right Hand (Worm Gears and Hollow Worms)

Pressure angle 15°.
Material:
Worm gear: special brass CuZn40Al2/So.
Worm: 11SMnPb30, inspected for fissures, case hardened HV620-700, ground.
Can be built into gear systems, no reworking required, thus short assembly times.

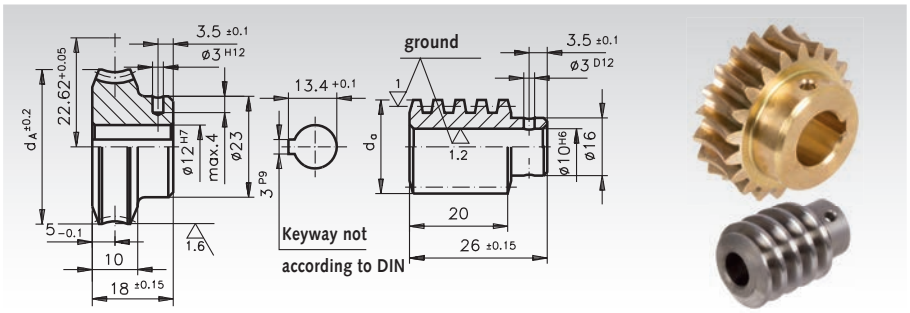

Ordering Details: e.g.:
Product No. 320 303 00, Prec. Worm Gear A 22.62
Product No. 320 403 00, Prec. Worm A 22.62

Centre Distance in Casing 22.62 mm + 0.05

Product No. Worm Gear	Product No. Worm	Transmission	Module	No. of Teeth	No. of Threads	Lead Angle	Worm Gear d_A ± 0.2 mm	Worm d_a mm	Maximum Torque at 2800min^{-1} Nm	** η	Weight Worm Gear g	Weight Worm g
320 303 00	**320 403 00**	3 : 1*	1,0	21	7	17° 36′	24,8	25,15	2,2	0,74	40	60
320 304 00	**320 404 00**	4 : 1	1,25	20	5	19° 32′	29,8	21,20	3,6	0,75	54	35
320 307 00	**320 407 00**	7 : 1	1,25	21	3	11° 46′	29,8	20,90	3,6	0,66	54	34
320 310 00	**320 410 00**	10,5 : 1	1,25	21	2	7° 41′	29,8	21,20	3,4	0,57	54	34
320 321 00	**320 421 00**	21 : 1	1,25	21	1	3° 48′	29,8	21,40	3,4	0,40	53	35
320 330 00	**320 430 00**	30 : 1	0,9	30	1	2° 50′	29,8	20,00	3,6	0,34	55	33
320 340 00	**320 440 00**	40 : 1	0,7	40	1	2° 20′	29,8	18,60	3,9	0,29	60	28

* Worm only polished.
** The figures stated for the efficiency are only reference values, as besides the lead angle, mounting, lubrication, speed and assembly also have an influence on the efficiency.

Precision Worm Gear Sets - Right Hand (Worm Gears and Hollow Worms)

Pressure angle 15°.
Material:
Worm gear: special brass CuZn40Al2/So.
Worm: 11SMnPb30, inspected for fissures, case hardened HV620-700, ground.
Can be built into gear systems, no reworking required, thus short assembly times.

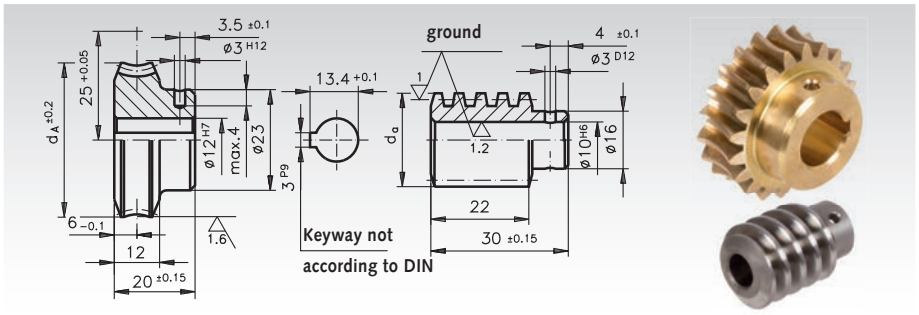

Ordering Details: e.g.:
Product No. 320 604 00, Prec. Worm Gear A 25
Product No. 320 704 00, Prec. Worm A 25

Centre Distance in Casing 25 mm + 0.05

Product No. Worm Gear	Product No. Worm	Transmission	Module	No. of Teeth	No. of Threads	Lead Angle	Worm Gear d_A ± 0.2 mm	Worm d_a mm	Maximum Torque at 2800min^{-1} Nm	** η	Weight Worm Gear g	Weight Worm g
320 604 00	**320 704 00**	4 : 1	1,4	20	5	20° 29′	33,5	22,80	5,1	0,76	80	46
320 605 00	**320 705 00**	5 : 1	1,5	20	4	19° 15′	34,8	21,20	6,5	0,75	84	37
320 606 00	**320 706 00**	6,5 : 1	1,15	26	4	13° 52′	34,8	21,50	6,0	0,70	80	42
320 610 00	**320 710 00**	10 : 1	1,5	20	2	8° 48′	34,8	22,60	5,9	0,61	80	44
320 615 00	**320 715 00**	15 : 1	1,0	30	2	6° 29′	34,8	19,70	5,7	0,53	86	35
320 620 00	**320 720 00**	20 : 1	1,5	20	1	4° 19′	34,8	22,90	5,8	0,44	77	46
320 625 00	**320 725 00**	25 : 1	1,0	25	1	2° 18′	27,8	26,96	4,1	0,30	56	77
320 630 00	**320 730 00**	30 : 1	1,0	30	1	2° 53′	33,5	21,90	5,9	0,34	78	46
320 640 00	**320 740 00**	40 : 1	0,8	40	1	2° 33′	34,8	19,56	6,2	0,31	87	37
320 650 00	**320 750 00**	50 : 1	0,6	50	1	1° 43′	33,5	21,16	5,1	0,24	78	47

** The figures stated for the efficiency are only reference values, as besides the lead angle, mounting, lubrication, speed and assembly also have an influence on the efficiency.



Reworking within 24h-service possible. Custom made parts on request.

Precision Worm Gear Sets - Right Hand (Worm Gears and Hollow Worms)

Pressure angle 15°.
Material:
Worm gear: special brass CuZn40Al2/So.
Worm: 11SMnPb30,
inspected for fissures, case hardened HV620-700, ground.
Can be built into gear systems, no reworking required, thus short assembly times.

Ordering Details: e.g.:
Product No. 321 002 00, Prec. Worm Gear A 31
Product No. 321 102 00, Prec. Worm A 31

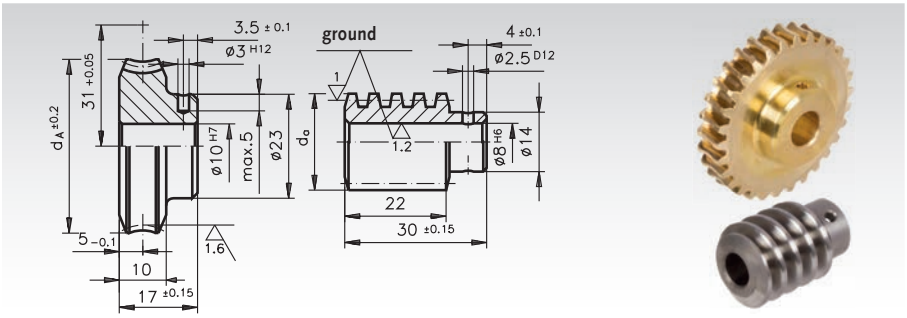

Centre Distance in Casing 31 mm + 0.05

Product No. Worm Gear	Product No. Worm	Transmission	Module	No. of Teeth	No. of Threads	Lead Angle	Worm Gear d_A ± 0.2 mm	Worm d_a mm	Maximum Torque at 2800min^{-1} Nm	** η	Weight Worm Gear g	Weight Worm g
321 002 00	**321 102 00**	*2,5 : 1	1,25	25	10	45° 15′	46,9	20,10	4,4	0,82	132	39
321 004 00	**321 104 00**	4,28 : 1	1,25	30	7	25° 24′	45,0	22,90	9	0,79	122	38
321 005 00	**321 105 00**	5 : 1	1,3	30	6	23° 46′	46,5	21,95	9,5	0,78	150	52
321 006 00	**321 106 00**	6 : 1	1,3	30	5	18° 13′	45,0	23,40	7,6	0,74	120	52
321 007 00	**321 107 00**	7 : 1	1,5	28	4	20° 32′	48,8	20,10	9,7	0,75	128	47
321 008 00	**321 108 00**	8,33 : 1	1,75	25	3	19° 49′	51,0	19,00	10	0,74	150	29
321 010 00	**321 110 00**	10 : 1	1,4	30	3	12° 50′	47,0	21,70	9,5	0,68	130	44
321 012 00	**321 112 00**	12 : 1	1,25	36	3	13° 55′	50,0	18,10	12,1	0,69	150	40
321 015 00	**321 115 00**	15 : 1	1,5	30	2	10° 40′	50,0	19,20	10,7	0,64	145	32
321 018 00	**321 118 00**	18 : 1	1,25	36	2	8° 44′	48,8	18,96	10,3	0,59	145	33
321 020 00	**321 120 00**	20 : 1	0,75	60	3	7° 49′	48,0	18,04	8,3	0,57	145	34
321 022 00	**321 122 00**	22 : 1	1,0	44	2	6° 29′	48,0	19,70	9,6	0,53	138	39
321 023 00	**321 123 00**	23 : 1	2,0	23	1	7° 29′	52,0	19,35	10,5	0,56	148	28
321 024 00	**321 124 00**	24 : 1	1,75	24	1	5° 4′	47,0	23,30	9,2	0,48	125	49
321 025 00	**321 125 00**	25 : 1	1,75	25	1	5° 35′	48,5	21,50	9,6	0,49	132	40
321 028 00	**321 128 00**	28 : 1	1,5	28	1	4° 20′	46,5	22,85	9,1	0,44	125	49
321 030 00	**321 130 00**	30 : 1	1,5	30	1	5° 7′	48,8	19,80	10,3	0,47	142	54
321 032 00	**321 132 00**	32 : 1	1,4	32	1	4° 45′	48,8	19,70	10,2	0,45	142	35
321 038 00	**321 138 00**	38 : 1	1,25	38	1	5° 1′	51,2	16,80	11,4	0,46	158	24
321 045 00	**321 145 00**	45 : 1	1,0	45	1	3° 23′	48,0	18,93	9,5	0,37	142	36
321 050 00	**321 150 00**	50 : 1	0,9	50	1	3° 3′	48,0	18,70	9	0,35	143	35
321 055 00	**321 155 00**	55 : 1	0,9	55	1	4° 12′	52,0	14,10	10,4	0,40	172	17
321 060 00	**321 160 00**	60 : 1	0,75	60	1	2° 33′	48,0	18,40	8,2	0,31	144	35
321 070 00	**321 170 00**	70 : 1	0,7	70	1	3° 7′	52,0	14,30	9	0,34	170	19
321 075 00	**321 175 00**	75 : 1	0,6	75	1	2° 2′	47,0	18,10	7,3	0,26	143	35
321 090 00	**321 190 00**	90 : 1	0,5	90	1	1° 41′	48,0	18,00	6,4	0,23	143	35
321 100 00	**321 200 00**	100 : 1	0,5	100	1	2° 24′	52,7	12,96	7,4	0,28	175	16

* Worm only polished - worm gear with helical gearing.
** The figures stated for the efficiency are only reference values, since - besides the lead angle - mounting, lubrication, speed and assembly also have an influence on the efficiency.



Reworking within 24h-service possible. Custom made parts on request.

Precision Worm Gear Sets - Right Hand (Worm Gears and Hollow Worms)

Pressure angle 15°.
Material:
Worm gear: special brass CuZn40Al2/So.
Worm: 11SMnPb30, inspected for fissures, case hardened HV620-700, ground.
Can be built into gear systems, no reworking required, thus short assembly times.

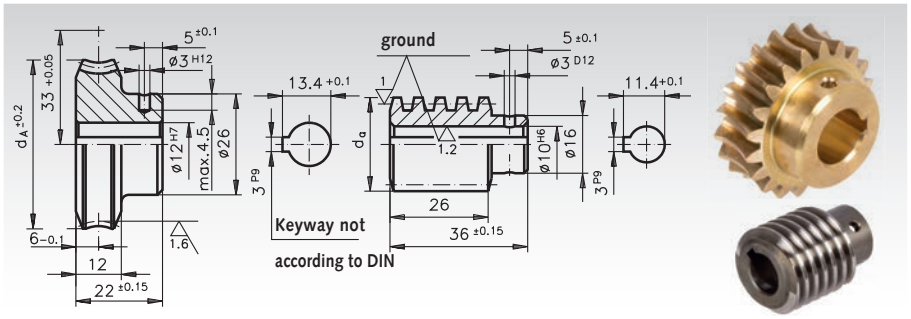

Ordering Details: e.g.:
Product No. 321 303 00, Prec. Worm Gear A 33
Product No. 321 403 00, Prec. Worm A 33

Centre Distance in Casing 33 mm + 0.05

Product No. Worm Gear	Product No. Worm	Transmission	Module	No. of Teeth	No. of Threads	Lead Angle	Worm Gear d_A ± 0.2 mm	Worm d_a mm	Maximum Torque at 2800min^{-1} Nm	* η	Weight Worm Gear g	Weight Worm g
321 303 00	**321 403 00**	3,5 : 1	1,75	21	6	25° 57′	47,0	27,50	10,1	0,79	155	80
321 305 00	**321 405 00**	5 : 1	2,0	20	4	20° 50′	49,0	26,50	10,6	0,77	164	70
321 307 00	**321 407 00**	7 : 1	1,5	28	4	15° 32′	48,0	25,40	12,2	0,72	164	69
321 310 00	**321 410 00**	10 : 1	1,5	30	3	13° 10′	51,0	22,75	13,3	0,69	186	53
321 311 00	**321 411 00**	11,3 : 1	1,3	34	3	10° 42′	49,2	23,60	13,3	0,65	178	60
321 312 00	**321 412 00**	12 : 1	1,9	24	2	11° 14′	52,0	23,30	13,5	0,66	186	50
321 314 00	**321 414 00**	14 : 1	1,5	28	2	7° 20′	47,0	26,50	11,4	0,57	159	77
321 315 00	**321 415 00**	15 : 1	1,5	30	2	8° 25′	50,0	23,50	13,0	0,60	180	57
321 316 00	**321 416 00**	16 : 1	1,5	32	2	10° 1′	53,0	20,24	14,0	0,63	203	38
321 317 00	**321 417 00**	17 : 1	1,4	34	2	9° 3′	52,5	20,60	14,2	0,61	202	41
321 318 00	**321 418 00**	18 : 1	1,25	36	2	6° 57′	49,2	23,15	12,6	0,55	180	58
321 320 00	**321 420 00**	20 : 1	1,15	40	2	6° 43′	50,5	21,96	12,7	0,54	188	52
321 324 00	**321 424 00**	24 : 1	1,9	24	1	5° 27′	51,0	23,80	13,2	0,49	183	54
321 328 00	**321 428 00**	28 : 1	1,5	28	1	3° 36′	46,6	26,90	11,2	0,40	156	80
321 330 00	**321 430 00**	30 : 1	1,5	30	1	4° 8′	50,0	23,85	12,7	0,43	178	60
321 332 00	**321 432 00**	32 : 1	1,5	32	1	4° 50′	52,5	20,80	13,5	0,46	200	40
321 338 00	**321 438 00**	38 : 1	1,25	38	1	3° 55′	51,6	20,76	13,9	0,41	200	44
321 350 00	**321 450 00**	50 : 1	0,9	50	1	2° 27′	48,0	22,80	10,0	0,31	178	60
321 356 00	**321 456 00**	56 : 1	0,8	56	1	2° 10′	48,0	22,75	10,1	0,29	180	62
321 375 00	**321 475 00**	75 : 1	0,6	75	1	1° 41′	48,0	21,70	9,0	0,24	183	56

* The figures stated for the efficiency are only reference values, as besides the lead angle, mounting, lubrication, speed and assembly also have an influence on the efficiency.



Reworking within 24h-service possible. Custom made parts on request.

Precision Worm Gear Sets - Right Hand (Worm Gears and Hollow Worms)

Pressure angle 15°.
Material:
Worm gear: special brass CuZn40Al2/So.
Worm: 11SMnPb30, inspected for fissures, case hardened HV620-700, ground.
Can be built into gear systems, no reworking required, thus short assembly times.

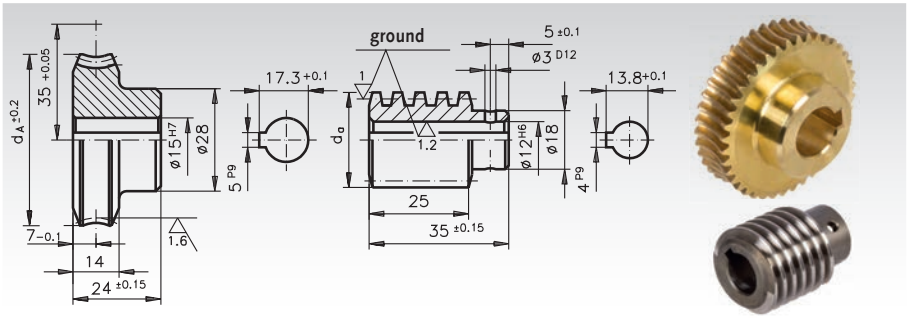

Ordering Details:e.g.:
Product No. 322 002 00, Prec. Worm Gear A 35
Product No. 322 102 00, Prec. Worm A 35

Centre Distance in Casing 35 mm + 0.05

Product No. Worm Gear	Product No. Worm	Transmission	Module	No. of Teeth	No. of Threads	Lead Angle	Worm Gear d_A ± 0.2 mm	Worm d_a mm	Maximum Torque at 2800min^{-1} Nm	** η	Weight Worm Gear g	Weight Worm g
322 002 00	**322 102 00**	*2,78 : 1	1,5	25	9	31° 55′	46,76	29,20	6,6	0,81	178	88
322 005 00	**322 105 00**	5 : 1	1,75	25	5	22° 52′	53,00	26,02	15,3	0,78	220	62
322 007 00	**322 107 00**	7,25 : 1	1,5	29	4	13° 47′	50,00	28,18	14,7	0,71	195	80
322 008 00	**322 108 00**	8 : 1	1,9	24	3	14° 25′	53,00	26,69	16,7	0,71	210	65
322 010 00	**322 110 00**	10 : 1	1,5	30	3	10° 43′	51,00	27,20	16,0	0,66	200	73
322 012 00	**322 112 00**	12 : 1	1,9	24	2	9° 11′	52,00	27,60	16,1	0,63	210	70
322 015 00	**322 115 00**	15 : 1	1,5	30	2	7°	50,00	27,62	15,3	0,57	198	76
322 020 00	**322 120 00**	20 : 1	1,15	40	2	5° 33′	50,50	26,08	14,8	0,51	210	70
322 025 00	**322 125 00**	25 : 1	0,9	50	2	4° 9′	49,00	26,67	12,9	0,44	210	80
322 030 00	**322 130 00**	30 : 1	1,5	30	1	3° 27′	50,00	27,92	15,0	0,40	196	80
322 040 00	**322 140 00**	40 : 1	1,15	40	1	2° 45′	50,50	26,21	14,7	0,34	200	70
322 050 00	**322 150 00**	50 : 1	0,9	50	1	2° 4′	49,00	26,73	12,9	0,28	188	78
322 058 00	**322 158 00**	58 : 1	0,85	58	1	2° 21′	53,00	22,35	14,5	0,30	200	50
322 090 00	**322 190 00**	90 : 1	0,5	90	1	1° 9′	49,00	26,00	9,1	0,18	198	79

Precision Worm Gear Sets - Right Hand (Worm Gears and Hollow Worms)

Pressure angle 15°.
Material:
Worm gear: special brass CuZn40Al2/So.
Worm: 11SMnPb30, inspected for fissures, case hardened HV620-700, ground.
Can be built into gear systems, no reworking required, thus short assembly times.

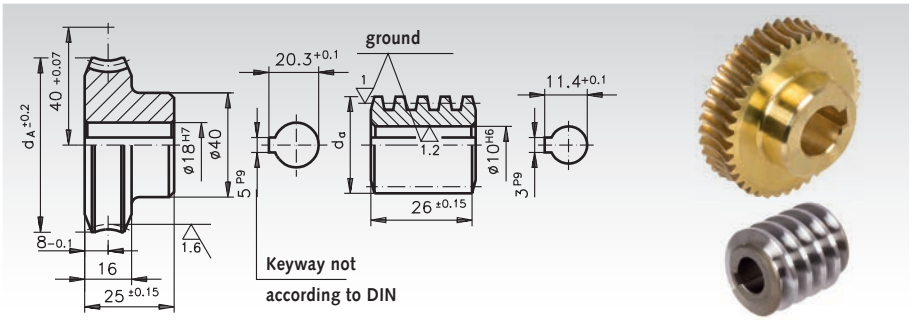

Ordering Details:e.g.:
Product No. 322 306 00, Prec. Worm Gear A 40
Product No. 322 406 00, Prec. Worm A 40

Centre Distance in Casing 40 mm + 0.07

Product No. Worm Gear	Product No. Worm	Transmission	Module	No. of Teeth	No. of Threads	Lead Angle	Worm Gear d_A ± 0.2 mm	Worm d_a mm	Maximum Torque at 2800min^{-1} Nm	** η	Weight Worm Gear g	Weight Worm g
322 306 00	**322 406 00**	6,75 : 1	2,0	27	4	21° 19′	64,0	26,00	29,5	0,77	386	58
322 308 00	**322 408 00**	8 : 1	2,25	24	3	16° 35′	62,5	28,14	27,5	0,74	390	58
322 310 00	**322 410 00**	10 : 1	1,9	30	3	16° 1′	65,0	24,46	29,5	0,72	402	49
322 312 00	**322 412 00**	12 : 1	1,5	36	3	10° 21′	60,0	28,05	25,2	0,65	352	81
322 315 00	**322 415 00**	15 : 1	1,9	30	2	9° 53′	64,0	25,94	28,0	0,64	380	60
322 320 00	**322 420 00**	20 : 1	1,5	40	2	8° 59′	66,0	22,20	28,9	0,61	428	40
322 325 00	**322 425 00**	25 : 1	1,15	50	2	5° 58′	62,0	24,45	24,4	0,52	370	60
322 328 00	**322 428 00**	28 : 1	2,0	28	1	4° 47′	61,5	28,00	28,4	0,47	360	72
322 330 00	**322 430 00**	30 : 1	2,0	30	1	5° 50′	66,0	23,68	30,1	0,51	480	42
322 335 00	**322 435 00**	35 : 1	1,75	35	1	5° 26′	67,0	21,98	31,0	0,49	430	36
322 340 00	**322 440 00**	40 : 1	1,5	40	1	4° 20′	65,0	22,83	28,3	0,44	420	44
322 350 00	**322 450 00**	50 : 1	1,25	50	1	4° 8′	68,0	19,80	27,0	0,42	450	30
322 356 00	**322 456 00**	56 : 1	1,0	56	1	2° 23′	59,0	26,00	21,9	0,31	370	40
322 360 00	**322 460 00**	60 : 1	0,9	60	1	1° 59′	57,5	27,72	19,3	0,28	340	87
322 370 00	**322 470 00**	70 : 1	0,9	70	1	3° 3′	67,0	18,71	24,1	0,35	460	28
322 375 00	**322 475 00**	75 : 1	0,75	75	1	1° 48′	60,0	25,25	18,8	0,25	370	72
322 380 00	**322 480 00**	80 : 1	0,75	80	1	2° 10′	64,0	21,40	20,1	0,28	420	45

* Worm only polished - worm gear with helical gearing.
** The figures stated for the efficiency are only reference values.

Precision Worm Gear Sets, Right Hand (Worm Gears and Hollow Worms)

Pressure angle 15°.
Material:
Worm Gear: special brass CuZn40Al2/So.
Worm: 11SMnPb30, inspected for fissures, case hardened HV620-700, ground.
Can be built into gear systems, no reworking required , thus short assembly times.

Ordering Details: e.g.:
Product No. 330 004 00, Prec. Worm Gear A 50.
Product No. 323 104 00, Prec. Worm A 50.

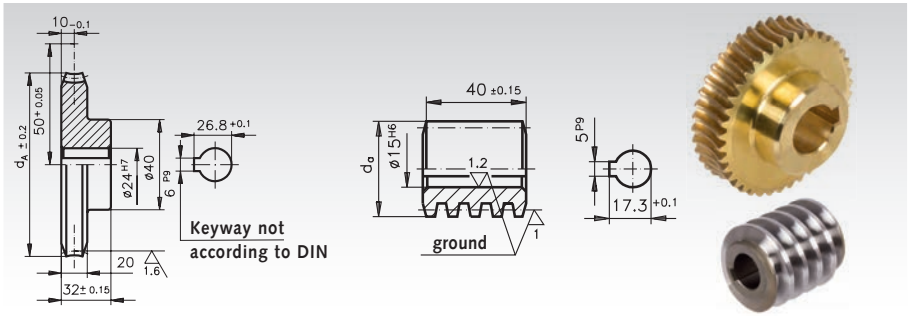

Centre distance in Housing 50 mm + 0,05

Product No. Worm Gear	Product No. Worm	Transmission	Module	No. of Teeth	No. of Threads	Lead Angle	Worm Gear d_A ± 0.2 mm	Worm d_a mm	Maximum Torque at 2800min^{-1} Nm	* η	Weight Worm Gear g	Weight Worm g
330 004 00	**323 104 00**	4,25 : 1	3,5	17	4	25°51′	77	39,10	34	0,80	580	200
330 006 00	**323 106 00**	6 : 1	3,5	18	3	19°17′	77	38,80	52	0,77	580	180
330 008 00	**323 109 00**	8,66 : 1	2,5	26	3	13°52′	77	36,29	64	0,72	600	176
330 012 00	**323 113 00**	12 : 1	2,75	24	2	10°23′	77	36,00	66	0,66	620	156
330 014 00	**323 115 00**	13,5 : 1	2,5	27	2	9°38′	77	34,90	63	0,65	630	160
330 019 00	**323 121 00**	19 : 1	3,5	19	1	6°17′	77	39,00	78	0,55	590	190
330 023 00	**323 125 00**	23 : 1	3,0	23	1	5°38′	77	36,58	71	0,52	600	170
330 027 00	**323 130 00**	27 : 1	2,5	27	1	4°40′	77	35,73	65	0,48	620	170
330 035 00	**323 138 00**	35 : 1	2,0	35	1	3°51′	77	33,78	57	0,43	630	150
330 046 00	**323 150 00**	46 : 1	1,5	46	1	2°47′	74	33,85	51	0,36	620	170
330 055 00	**323 160 00**	55 : 1	1,25	55	1	2°19′	74	33,40	46	0,31	620	170
330 069 00	**323 175 00**	69 : 1	1,0	69	1	1°51′	74	32,90	41	0,27	620	170

Precision Worm Gear Sets, Right Hand (Worm Gears and Hollow Worms)

Pressure angle 15°.
Material:
Worm Gear: special brass CuZn40Al2/So.
Worm: 11SMnPb30, inspected for fissures, case hardened HV620-700, ground.
Can be built into gear systems, no reworking required , thus short assembly times.

Ordering Details: e.g.:
Product No. 323 004 00, Prec. Worm Gear A 53.
Product No. 323 104 00, Prec. Worm A 53.

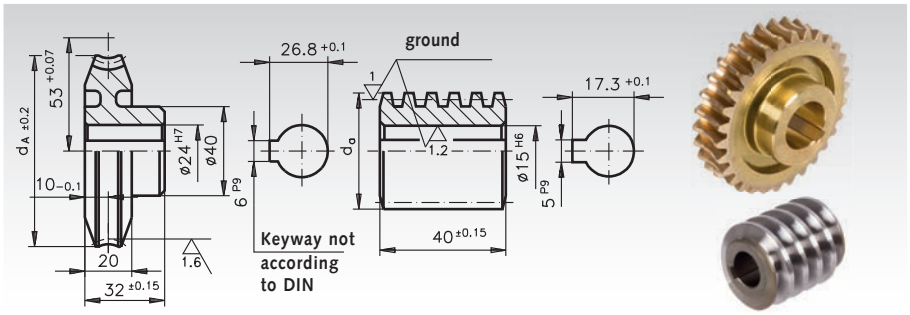

Centre distance in Housing 53 mm + 0,07

Product No. Worm Gear	Product No. Worm	Transmission	Module	No. of Teeth	No. of Threads	Lead Angle	Worm Gear d_A ± 0.2 mm	Worm d_a mm	Maximum Torque at 2800min^{-1} Nm	* η	Weight Worm Gear g	Weight Worm g
323 004 00	**323 104 00**	4,75 : 1	3,5	19	4	25° 51′	83,0	39,10	45	0,80	590	200
323 006 00	**323 106 00**	6,67 : 1	3,5	20	3	19° 17′	84,0	38,80	67	0,77	600	180
323 009 00	**323 109 00**	9,67 : 1	2,5	29	3	13° 52′	82,0	36,29	77	0,72	620	176
323 013 00	**323 113 00**	13,5 : 1	2,75	27	2	10° 23′	84,0	36,00	80	0,66	630	156
323 015 00	**323 115 00**	15 : 1	2,5	30	2	9° 38′	83,0	34,90	75	0,65	650	160
323 021 00	**323 121 00**	21 : 1	3,5	21	1	6° 17′	83,0	39,00	94	0,55	600	190
323 025 00	**323 125 00**	25 : 1	3,0	25	1	5° 38′	84,0	36,58	84	0,52	630	170
323 028 00	**323 128 00**	28 : 1	2,5	28	1	3° 59′	77,5	41,00	87	0,44	500	250
323 030 00	**323 130 00**	30 : 1	2,5	30	1	4° 40′	83,0	35,73	77	0,48	640	170
323 038 00	**323 138 00**	38 : 1	2,0	38	1	3° 51′	83,0	33,78	68	0,43	660	150
323 050 00	**323 150 00**	50 : 1	1,5	50	1	2° 47′	81,0	33,85	60	0,36	640	170
323 060 00	**323 160 00**	60 : 1	1,25	60	1	2° 19′	80,0	33,40	55	0,31	650	170
323 075 00	**323 175 00**	75 : 1	1,0	75	1	1° 51′	78,0	32,90	49	0,27	640	170

* The figures stated for the efficiency are only reference values, as besides the lead angle, mounting, lubrication, speed and assembly also have an influence on the efficiency.

Precision Worm Gear Sets, Right Hand (Worm Gears and Hollow Worms)

Pressure angle 15°.
Material:
Worm Gear: special brass CuZn40Al2/So.
Worm: 11SMnPb30, inspected for fissures, case hardened HV620-700, ground.
Can be built into gear systems, no reworking required , thus short assembly times.

Ordering Details: e.g.:
Product No. 330 306 00, Prec. Worm Gear A 63.
Product No. 323 104 00, Prec. Worm A 63.

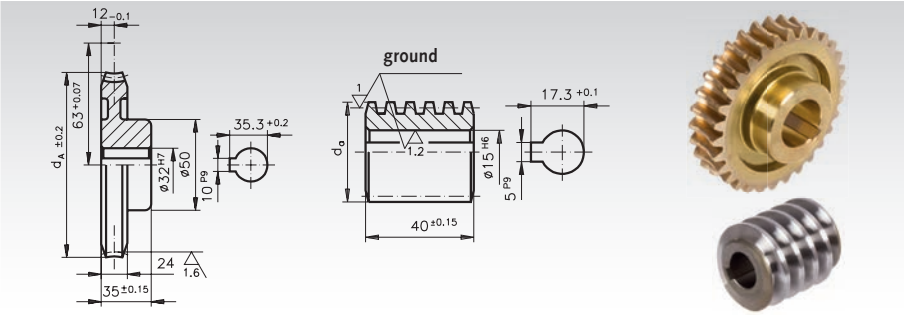

Centre distance in Housing 63 mm + 0,07

Product No. Worm Gear	Product No. Worm	Transmission	Module	No. of Teeth	No. of Threads	Lead Angle	Worm Gear d_A ± 0.2 mm	Worm d_a mm	Maximum Torque at 2800min^{-1} Nm	* η	Weight Worm Gear g	Weight Worm g
330 306 00	**323 104 00**	6 : 1	3,5	24	4	25° 51′	104	39,10	89	0,80	1200	200
330 312 00	**323 109 00**	12 : 1	2,5	36	3	13° 52′	104	36,29	141	0,72	1100	180
330 319 00	**330 419 00**	19 : 1	2,5	38	2	10° 8′	104	33,40	133	0,65	1200	136
330 326 00	**323 121 00**	26 : 1	3,5	26	1	6° 17′	104	39,00	172	0,55	1065	190
330 334 00	**330 434 00**	34 : 1	2,75	34	1	5° 9′	104	36,10	148	0,50	1200	170
330 348 00	**323 138 00**	48 : 1	2,0	48	1	3° 51′	104	33,78	125	0,43	1200	150
330 363 00	**323 150 00**	63 : 1	1,5	63	1	2° 47′	101	33,85	111	0,36	1200	170
330 370 00	**323 475 00**	70 : 1	1,25	70	1	1° 59′	97	38,60	112	0,29	980	250

Precision Worm Gear Sets, Right Hand (Worm Gears and Hollow Worms)

Pressure angle 15°.
Material:
Worm Gear: special brass CuZn40Al2/So.
Worm: 11SMnPb30, inspected for fissures, case hardened HV620-700, ground.
Can be built into gear systems, no reworking required , thus short assembly times.

Ordering Details: e.g.:
Product No. 323 306 00, Prec. Worm Gear A 65.
Product No. 323 104 00, Prec. Worm A 65.

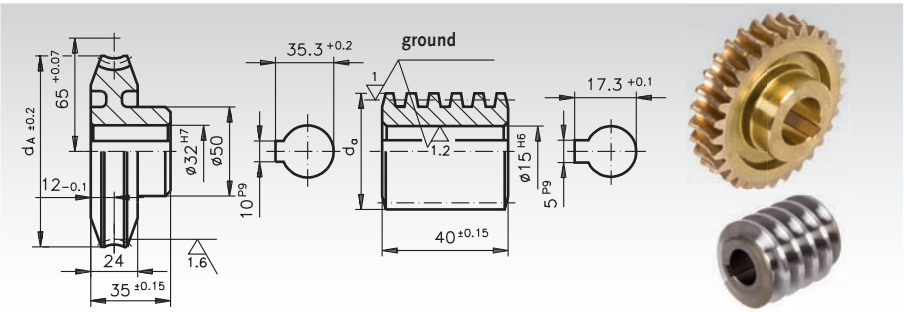

Centre distance in Housing 65 mm + 0,07

Product No. Worm Gear	Product No. Worm	Transmission	Module	No. of Teeth	No. of Threads	Lead Angle	Worm Gear d_A ± 0.2 mm	Worm d_a mm	Maximum Torque at 2800min^{-1} Nm	* η	Weight Worm Gear g	Weight Worm g
323 306 00	**323 104 00**	6,25 : 1	3,5	25	4	25° 51′	108,0	39,10	101	0,80	1200	200
323 312 00	**323 109 00**	12,66 : 1	2,5	38	3	13° 52′	108,0	36,29	156	0,72	1300	176
323 328 00	**323 121 00**	28 : 1	3,5	28	1	6° 17′	108,0	39,00	192	0,55	1200	190
323 350 00	**323 138 00**	50 : 1	2,0	50	1	3° 51′	108,0	33,78	137	0,43	1200	150
323 366 00	**323 150 00**	66 : 1	1,5	66	1	2° 47′	107,0	33,85	122	0,36	1200	170
323 375 00	**323 475 00**	75 : 1	1,25	75	1	1° 59′	100,0	38,60	125	0,29	1100	250

* The figures stated for the efficiency are only reference values, as besides the lead angle, mounting, lubrication, speed and assembly also have an influence on the efficiency.



Reworking within 24h-service possible. Custom made parts on request.

Precision Worm Gear Sets, Right Hand (Worm Gears and Hollow Worms)

Pressure angle 15°.
Material:
Worm Gear: special brass CuZn40Al2/So.
Worm: 11SMnPb30, inspected for fissures, case hardened HV620-700, ground.
Can be built into gear systems, no reworking required , thus short assembly times.

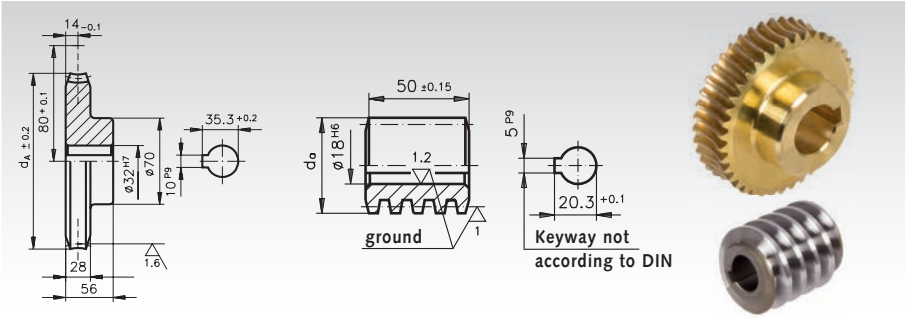

Ordering Details: e.g.:
Product No. 330 607 00, Prec. Worm Gear A 80.
Product No. 330 707 00, Prec. Worm A 80.

Centre distance in Housing 80 mm + 0,1

Product No. Worm Gear	Product No. Worm	Transmission	Module	No. of Teeth	No. of Threads	Lead Angle	Worm Gear d_A ± 0.2 mm	Worm d_a mm	Maximum Torque at 2800min^{-1} Nm	* η	Weight Worm Gear g	Weight Worm g
330 607 00	**330 707 00**	6,75 : 1	4,0	27	4	23°35′	132	48,0	150	0,79	2900	280
330 612 00	**330 712 00**	12 : 1	2,5	48	4	16°36′	132,5	40,0	243	0,75	3200	270
330 620 00	**330 720 00**	20 : 1	3,0	40	2	8°58′	130,5	44,5	296	0,63	3033	340
330 630 00	**330 730 00**	30 : 1	4,0	30	1	5°44′	132,5	48,0	348	0,53	2900	380
330 650 00	**330 750 00**	50 : 1	2,5	50	1	4° 6′	132,5	40,0	248	0,45	3200	266
330 680 00	**330 780 00**	80 : 1	1,5	80	1	2° 9′	124,5	43,0	213	0,30	2900	380

* The figures stated for the efficiency are only reference values, as besides the lead angle, mounting, lubrication, speed and assembly also have an influence on the efficiency.



Reworking within 24h-service possible. Custom made parts on request.

Precision Worm Gear Sets - Right Hand (Worm Gears and Worm Shafts)

Pressure angle: 20°.

Material: Worm gears with cast iron hub made from grey cast iron GG20 and toothed ring made from special worm-gear bronze (G-CuSn12Ni).
Worm shafts made from steel C45 hardened. Shaft ends soft. Tooth flanks ground.

Worm Gears, Centre Distance in Casing a = 100 mm ± 0.03

Ordering Details: e.g.: Product No. 332 014 01, Prec.-Worm Gear, a = 100, i = 14.5

Product No.	Transmission	Module	Number of teeth	d_A	d_0	D_1	b	Md_2 at 1500min^{-1}	η*	Weight
				mm	mm	mm	mm	Nm		kg
332 014 01	14,5	5	29	165	150	-	38	485	0,87	5,95
332 026 01	26	3,15	52	176	166,5	115	26	430	0,84	5,15
332 029 01	29	5	29	165	150	-	38	550	0,75	5,8
332 039 01	39	4	39	172	160	-	32	470	0,76	5,7
332 062 01	62	2,5	62	165	157,5	112	28	510	0,66	4,9
332 082 01	82	2	82	170,5	164,5	118	26	450	0,62	4,7
332 107 01	107	1,6	107	177	172	128	26**	300	0,59	4,5

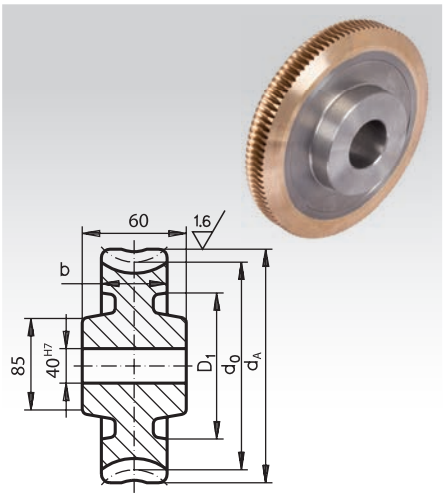

* The figures stated for the efficiency are only reference values, as besides the lead angle, mounting, lubrication, speed and assembly also have an influence on the efficiency.

** Width of the main body: 26 mm, tapered, to be paired with Tooth Width 20 mm.

Worm Shafts, Centre Distance in Casing a = 100 mm ± 0.03

Ordering Details: e.g.: Product No. 332 014 02, Pr.-Worm Shaft, a = 100, i = 14.5

Product No.	Transmission	Module	Number of Threads	d_A	d	ND	G	e	η*	Weight
				mm	mm	mm	mm	mm		kg
332 014 02	14,5	5	2	60	50	40,5	70	110	0,87	3,85
332 026 02	26	3,15	2	39,8	33,5	40,5	58	110	0,84	3,05
332 029 02	29	5	1	60	50	40,5	70	110	0,75	3,86
332 039 02	39	4	1	48	40	40,5	64	110	0,76	3,3
332 062 02	62	2,5	1	47,5	42,5	40,5	50	90	0,66	3,5
332 082 02	82	2	1	39,5	35,5	40,5	46	90	0,62	3,2
332 107 02	107	1,6	1	31,2	28	30,5	42	90	0,59	1,85

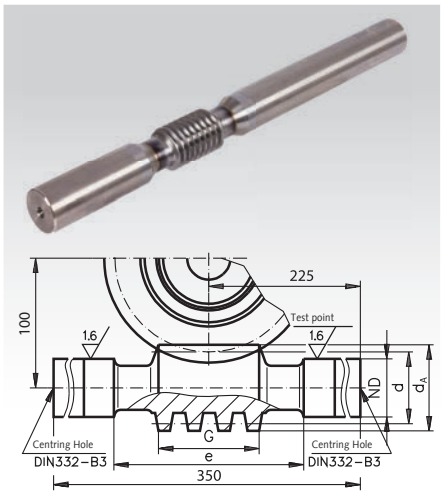

* The figures stated for the efficiency are only reference values, as besides the lead angle, mounting, lubrication, speed and assembly also have an influence on the efficiency.

Self-locking capacity

The self-locking capacity is influenced by the lead angle, the surface structure of the flanks, the sliding speed, the lubricant and the heating.

For worm gears with centre distance a=100mm and 125mm:

Up to ratio 39:1 not self-locking.

From ratio 62:1 Static self-locking.

Shocks or vibration can override the self-locking capacity. Apart from that, various factors in connection with lubrication, gliding speed and load can create such favourable operating conditions that the self-locking capacity is negatively influenced.

For this reason we cannot grant any guarantee regarding the self-locking capacity.



Reworking within 24h-service possible. Custom made parts on request.

Precision Worm Gear Sets - Right Hand (Worm Gears and Worm Shafts)

Pressure angle: 20°.

Material: Worm gears with cast iron hub made from grey cast iron GG20 and toothed ring made from special worm-gear bronze (G-CuSn12Ni).
Worm shafts made from Steel C45 hardened. Shaft ends not tempered. Tooth flanks ground.

Worm Gears, Centre Distance in Casing a = 125 mm ± 0.03

Ordering Details: e.g.: Product No. 332 214 01, Pr.-Worm Gear, a = 125, i = 14.5

Product No.	Trans-mission	Module	Number of teeth	d_A	d_0	D_1	b	Md_2 at 1500min^{-1}	η*	Weight
				mm	mm	mm	mm	Nm		kg
332 214 01	14,5	6,3	29	206	187	-	50	950	0,88	11,4
332 226 01	25,5	4	51	222	210	155	32	810	0,86	10,3
332 229 01	29	6,3	29	206	187	-	50	1110	0,79	11,45
332 239 01	39	5	39	215	200	136	38	1060	0,78	10,1
332 262 01	62	3,15	62	206,5	197	145	34	1160	0,68	8,5
332 282 01	82	2,5	82	215	207,5	160	34	860	0,66	7,97
332 307 01	107	2	107	221	214,5	168	34	580	0,62	7,9

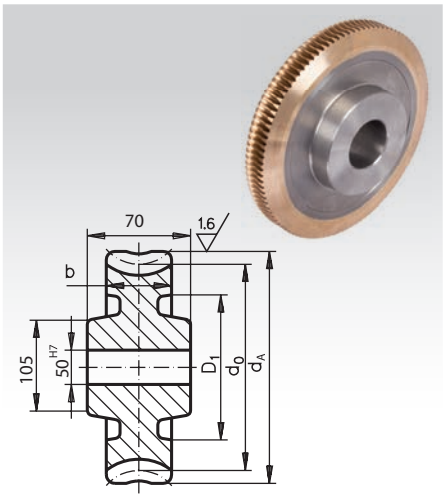

* The figures stated for the efficiency are only reference values, since - besides the lead angle - mounting, lubrication, speed and assembly also have an influence on the efficiency.

Worm Shafts, Centre Distance in Casing a = 125 mm ± 0.03

Ordering Details: e.g.: Product No. 332 214 02, Pr.-Worm Shaft, a = 125, i = 14.5

Product No.	Trans-mission	Module	Number of Threads	d_A	d	ND	G	e	η*	Weight
				mm	mm	mm	mm	mm		kg
332 214 02	14,5	6,3	2	75,6	63	50,5	85	135	0,88	7,05
332 226 02	25,5	4	2	48	40	50,5	75	135	0,86	5,42
332 229 02	29	6,3	1	75,6	63	50,5	85	135	0,79	7,05
332 239 02	39	5	1	60	50	50,5	82	135	0,78	6,06
332 262 02	62	3,15	1	59,3	53	50,5	64	105	0,68	6,35
332 282 02	82	2,5	1	47,5	42,5	45,5	58	105	0,66	4,9
332 307 02	107	2	1	39,5	35,5	40,5	52	105	0,62	3,75

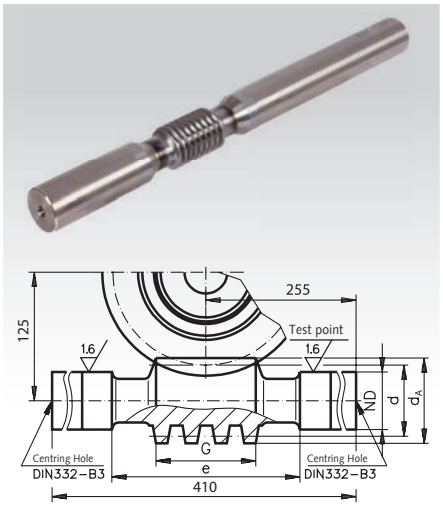

* The figures stated for the efficiency are only reference values, since - besides the lead angle - mounting, lubrication, speed and assembly also have an influence on the efficiency.

Self-locking capacity

The self-locking capacity is influenced by the lead angle, the surface structure of the flanks, the sliding speed, the lubricant and the heating.

For worm gears with centre distance a=100mm and 125mm:

Up to ratio 39:1 not self-locking.

From ratio 62:1 Static self-locking.

Shocks or vibration can override the self-locking capacity. Apart from that, various factors in connection with lubrication, gliding speed and load can create such favourable operating conditions that the self-locking capacity is negatively influenced.

For this reason we cannot grant any guarantee regarding the self-locking capacity.

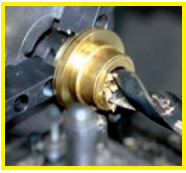

Reworking within 24h-service possible. Custom made parts on request.

Trapezoidal Thread Spindles and Nuts DIN 103 – Description

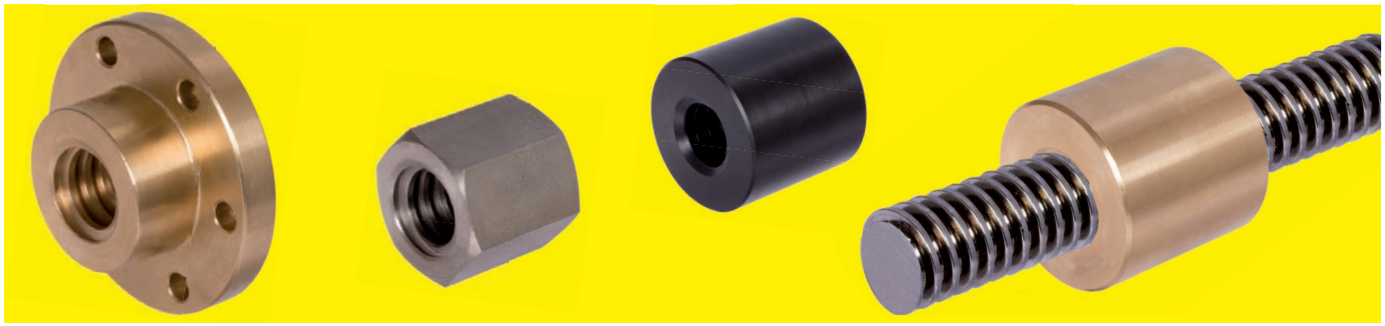

General description
Trapezoidal threads are ideal for movement due to their flank profile. Application: Conversion of a rotary movement into a linear one. Sometimes: Conversion of a linear movement into a rotary one. Trapezoidal threads can also be used as easy-to-loosen fastener.

Thread profile of the catalogue products
Metric DIN-ISO thread according to DIN 103, with 15° flank angle.

Designation of a Trapezoidal thread spindle DIN 103
DIN-number, abbreviation for trapezoidal thread, outside diameter x lead x length
For example: Spindle DIN 103 Tr. 12 x 3 x 1000mm.

Production method
Practically all of the spindles in the catalogue models are rolled. Thread rolling is the most economical production method for series production. Due to the chipless shaping, rolled threaded spindles feature a number of positive characteristics: Higher tensile strength, higher resistance to wear, higher fatigue strength under reversed bending, burnished thread flanks, precise profile, unsevered grain structure and higher resistance to corrosion. During thread rolling a groove forms at the outside diameter. This groove guarantees accuracy and cylindricity of the thread. It has no influence on the functioning of the threaded spindle, as the thread bears its load at the flanks. The threads of the nuts are cut.

Lubrication
Running without lubricant is not allowed. For grease lubrication, normal roller bearing grease is recommended. The lubricant consumption depends on the condition of use.

Catalogue Spindles page 310 - 312

Single thread right and left	Steel C15	Tr. 10 x 3 to Tr. 70 x 10	**Page 310**
	Stainless 1.4305 STAINLESS	Tr. 10 x 3 to Tr. 50 x 8	**Page 311**
Double thread, right hand	Steel C15	Tr. 12 x 6P3 to Tr. 40 x 14P7	**Page 312**
	Stainless 1.4305 STAINLESS	Tr. 12 x 6P3 to Tr. 40 x 14P7	**Page 312**

Stock lengths: 1000mm, 1500mm, 2000mm, 3000mm.
Other lengths and materials as well as customised models on request.

Stock Spindles page 313 - 315

- **Round nuts or hexagon nuts made from steel C35Pb and stainless steel 1.4305.**
  For clamping, manual adjustment and as a fastening nut. Not suitable for drive systems.
- **Round nuts or round flange nuts made from red brass Rg 7.**
  For drive systems at low and medium speed and operating times under 20%. Good dry running properties in situations with insufficient lubrication. In combination with a stainless spindle the drive becomes corrosion resistant.
- **Round flange nuts made from cast iron GG25.**
  As for round flange nut made from red brass but only limited dry-running capabilities and not corrosion proof.
- **Round nuts made from plastic PA6.6 with MoS2.**
  For low-noise drive systems. Maximum permissible peripheral speed $V_{max.}$ = 0.5 m/sec. at low load. Good dry-running properties.

Spindle and nut components are manufactured in accordance with DIN 103. Zero backlash (adjustable) can only be achieved with a two-part nut or two counteracting nuts. **Spindles and spindle nuts available from drawing on request.**



Chain Tensioners page 322



Reworking within 24h-service possible. Custom made parts on request.

Basis for Calculation of Trapezoidal-Threaded Spindle Drives

Required Driving Torque for a Threaded Spindle Drive

The required output torque at the spindle can be derived from the axial load, the lead of the spindle and the efficiency of threaded spindle drive and mounting. At short acceleration times and high speeds, the acceleration torque, and with sliding guide the breakaway torque also have to be considered.

Calculation method:

1) Determining the lead angle using α book of tables or DIN sheet or through calculation.

2) Determining the friction coefficient μ using a table.

3) Calculating the effective angle of friction p'.

4) Calculating the degree of efficiency η.

5) Calculating the torque M_d.

Important: About 10% should be added to the end result to make up for losses due to bearing situation. Additional friction due to linear guides and possible rotational forces have to considered by adding a respective allowance. This can also be done when calculating the input power.

Calculation:

1) Lead angle α calculated from:

$$\tan \alpha = \frac{P}{d_2 \cdot \pi}$$

2) Selecting the friction coefficient μ from the table.
See table page 309 bottom.

3) Calculating the effective angle of friction p' from:

$$\tan p' \approx \mu \cdot 1{,}07$$

4) Calculating the efficiency degree η:

$$\eta = \frac{\tan \alpha}{\tan (\alpha + p')}$$

5) Calculating the torque M_d in Nm:

$$M_d = \frac{F \cdot P}{2000 \cdot \pi \cdot \eta}$$

Torque due to an axial load

Due to their degree of efficiency, many spindle drives with trapezoidal thread are not self-locking, i. e. an applied axial load causes a spindle torque. In this case the efficiency is lower than with a conversion of rotary into linear motion.

Calculation method: as with the conversion of rotary into linear motion, but with $M_d`$ and η'.

Calculating the efficiency degree η':

$$\eta' = \frac{\tan (\alpha - p')}{\tan \alpha}$$

Calculating the torque $M_d`$ in Nm:

$$M_d` = \frac{F \cdot P \cdot \eta'}{2000 \cdot \pi}$$

Legend

- α (alpha) is the lead angle of the thread.
- η (eta) is the degree of efficiency regarding the conversion of rotary into linear motion.
- η' is the degree of efficiency regarding the conversion of linear into rotary motion.
- μ (mü) is the friction coefficient.
- π (pi) is ≈ 3.14.
- d_2 is the medium effective diameter.
- F is the overall axial load in N.
- M_d is the driving torque at the spindle end in Nm.
- $M_d`$ is the torque generated by the axial load in Nm.
- n is the speed in min^{-1}.
- P is the spindle lead in mm.
- p' is the effective angle of friction.

Required Driving Power of a Spindle Drive

The power (in kW) can be derived from the driving torque M_d and the spindle speed n (in min^{-1}):

Important: In order to allow for losses caused by the bearing and other frictional losses and the power required for rotatory acceleration, the power selected for the drive should be 60 to 100% above the calculated figure.

Self-locking Capacity of Trapezoidal Spindle Drives

The self-locking capacity is linked to the friction coefficient (determined by the material match spindle/nut, surface quality, lubrication) and to the lead angle. If the lead angle is smaller than the angle of friction, the spindle drive is self-locking.

We need to distinguish between static and dynamic self-locking capacity. With static self-locking capacity a motionless nut remains steadfast, as long as it is not set in motion by other influences.
With dynamic self-locking capacity a moving nut comes to a stop, when it is no longer driven.

In theory all listed single-thread spindle drives - except for plastic nuts - are self locking, as the lead angle is smaller than the angle of friction. A small vibration may, however be enough to set the nut moving. The only dynamic self-locking drive is size 70 x 10, as only here the lead angle is small enough (friction coefficient 0.05 = 2.86°).

Attention: the above statements are only valid under the assumption that the friction coefficients listed in the catalogue are really fitting. In practice surface properties and the type of lubrication and lubricant used may cause derivation from the original value. To be on the safe side, a locking device (clamping device) should be fitted. In connection with plastic nuts, **none** of the spindle drives listed are self-locking.

Due to their large lead, double-threaded spindle drives are generally not self-locking.

Critical Speed of Trapezoidal-Thread Spindles

With thin, fast running spindles there is a danger that resonant bending vibration occurs. The method described below helps to determine the resonant frequency provided a rigid enough installation. Speeds close to the critical speed also immensely increase the risk of lateral buckling - the critical speed must therefore always be considered when calculating the critical buckling length. (see following chapter "critical buckling force")

$n_{perm.} = n_{kr} \cdot f_{kr} \cdot c_{kr}$

$n_{perm.}$ is the fastest permissible spindle speed in min^{-1}.

n_{kr} is the critical spindle speed in min^{-1} - corresponds to the natural bending vibrations of the spindle and leads to resonance occurrences.

f_{kr} is a corrective factor, considering the spindle bearing. Precondition is a rigid enough installation of the spindle and a fixed bearing.
The following drawing shows 4 classic installation methods of f_{kr} for standard spindle bearings:

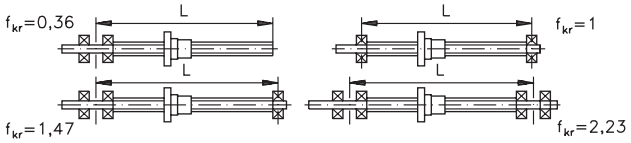

c_{kr} is a corrective factor, considering the influence of the critical buckling force. We would advise to first determine $n_{kr} \cdot f_{kr}$ and to then to equate $n_{perm.}$ with the actual speed n. This then leads to c_{kr} for $n/(n_{kr} \cdot f_{kr})$, and with these figures the diagramme then renders c_k (c_{kr}) the related maximum axial pressure load.

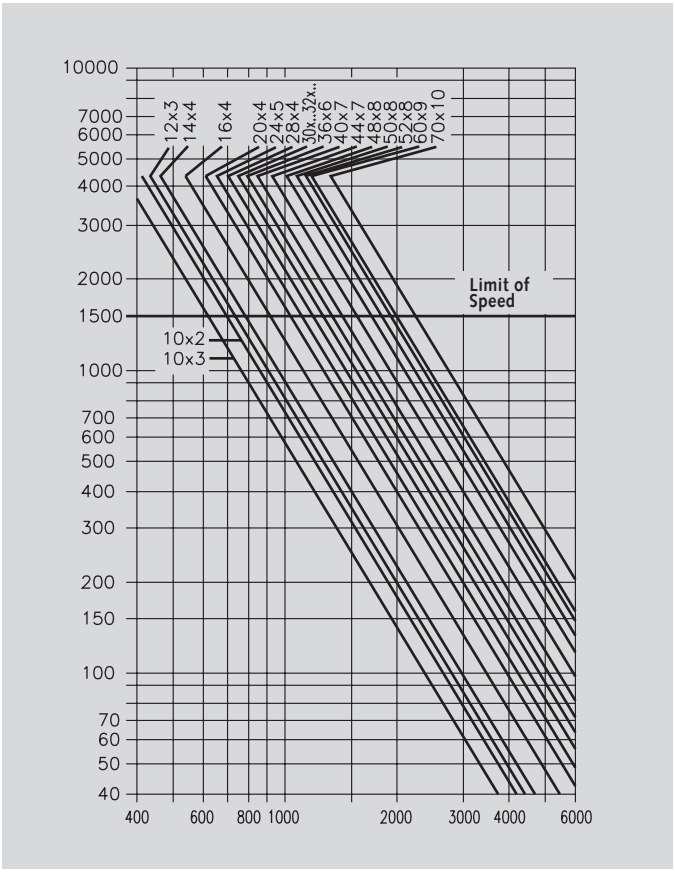

Critical Buckling Force of Trapezoidal-Threaded Spindles

With thin spindles under pressure load there is a risk that lateral buckling occurs. Before the permissible pressure load is determined, the safety factors of the mechanism have to be considered .

$F_{zul.} = F_k \cdot f_k \cdot c_k$

$F_{perm.}$ is the strongest permissible axial force (pressure load) on the spindle in kN.

F_k is the critical buckling force in kN in connection with the free length L.

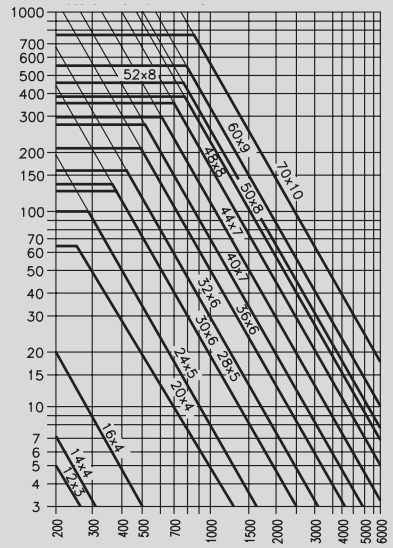

f_k is a corrective factor, considering the spindle bearing Precondition is a rigid enough installation of the spindle and a fixed bearing. The following table shows classic installation methods of f_k for standard spindle ends.

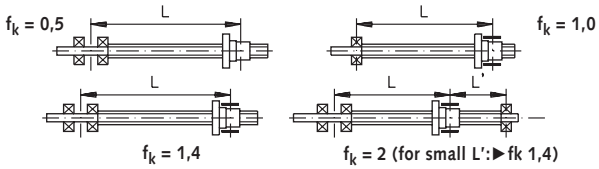

c_k is a corrective factor, considering the influence of the critical speed.

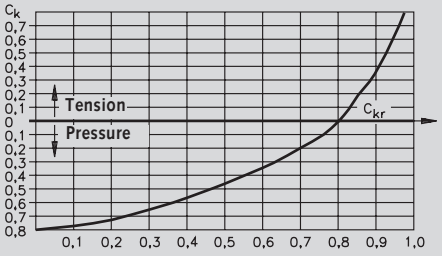

c_{kr} is here calculated as follows: $c_{kr} = \frac{n}{n_{kr} \cdot f_k}$

n is effective spindle speed in min^{-1}

n_{kr} is the critical spindle speed in min^{-1} according to the diagramme above.

f_k is the corrective factor of the critical spindle speed, under of the spindle bearing method. Values for f_k see above.

Basis for the Calculation of Trapezoidal-Threaded Spindles

Load Capacity

The load capacity for slide pairings usually depends on the material used, the surface properties, intake condition, lubrication conditions and gliding speed, on the temperature and thus on the duty cycle and possibilities for heat dissipation as well as the type of load (constant, fluctuating, alternating, shocks...).
The diagrammes below allow an assessment of the permissible axial load in connection with the speed of trapezoidal-threaded nuts on rolled trapezoidal-threaded spindles at normal operating conditions.

Load table for nuts made from steel C35 see page 309.

Regarding the Operating Times

Especially single-thread, trapezoidal-threaded spindle drives, due to their low degree of efficiency, convert most of the input power of the shaft into heat, which is first absorbed by spindle and then has to be dissipated. At low power and short operating times the natural dissipation and radiation of heat is usually sufficient. With continuous operation quite substantial cooling capacities might be required. As a thermodynamic calculation of these difficulties is usually to complex or even impossible, already existing comparative calculations are often the only source of information.

Round nuts made from red brass Rg7

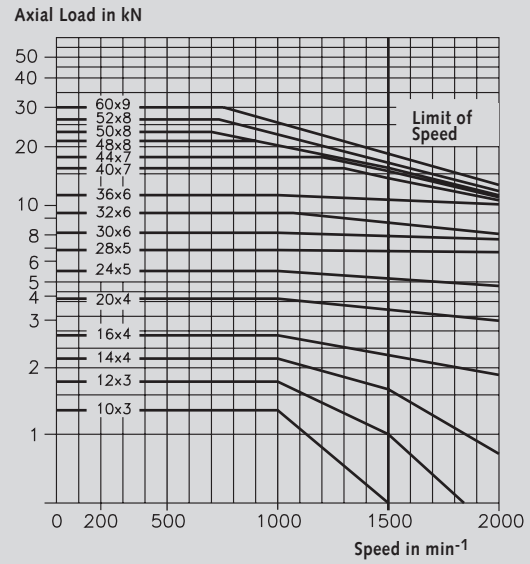

Round nuts made from plastic

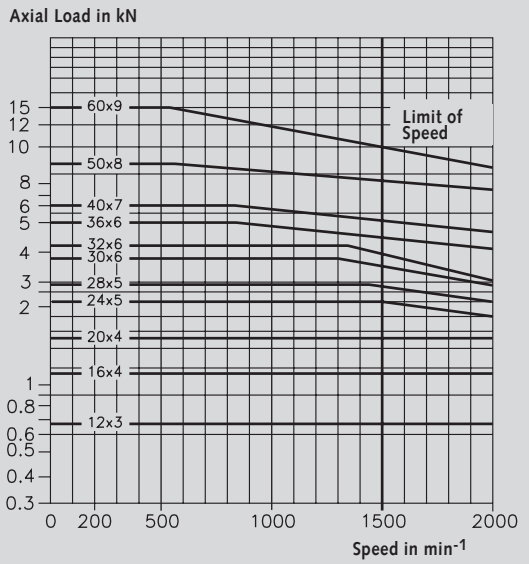

Round flange nuts made from cast iron GG25

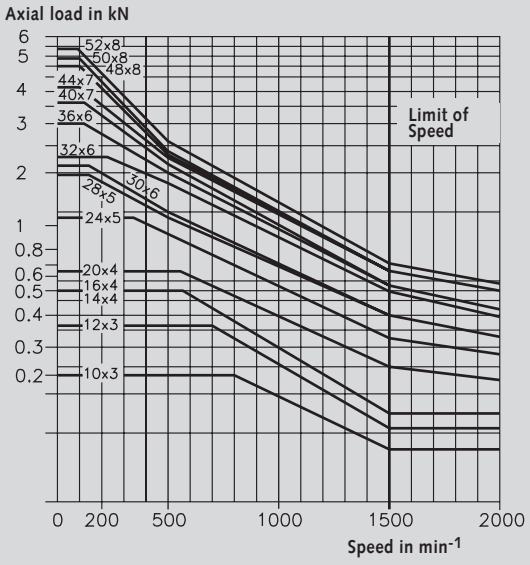

Round flange nuts made from red brass Rg7

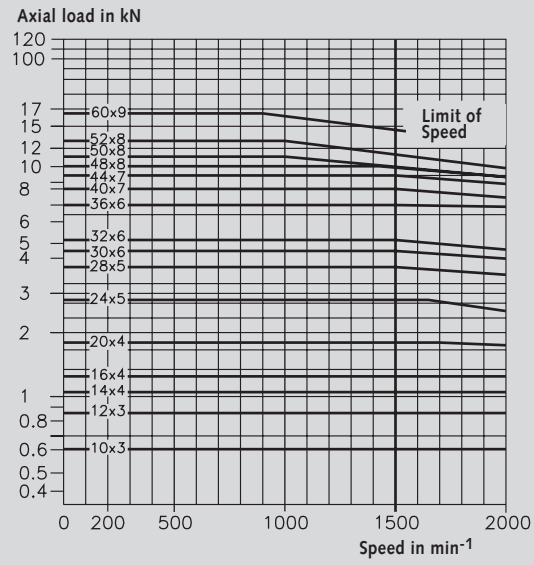

Approx. 80% of the axial force in kN are permissible for double-threaded nuts .

Load Table for Single-Thread Steel Nuts in kN Static (without Safety Margin)

Maximum static load capacity in kN for single-thread, trapezoidal-threaded nuts made from steel C35 at a surface pressure of 25 N/mm².

The figures do not include any safety margin. Depending on the application a safety of 1.5 to 6 might be required (this means the figures in the table have to be divided by 1.5 to 6).

In addition the spindle has to be checked for buckling. The decisive factor in this calculation is the free spindle length and the bearing of the spindle, see page 307.

With dynamic load, the surface pressure must be no larger than 10 N/mm².

With double-threaded nuts about 80% of the axial load in kN is permissible.

Trapezoidal Thread Ø x Lead mm	Length at h= 1.5 x d mm	Load Capacity at h= 1.5 x d kN	Length at h= 2 x d mm	Load Capacity at h= 2 x d kN
10 x 3	15	3,6	20	4,8
12 x 3	18	5,3	24	7,0
14 x 4	21	6,9	28	9,3
16 x 4	24	9,2	32	12,3
18 x 4	27	11,8	36	15,8
20 x 4	30	14,8	40	19,8
24 x 5	36	21,2	48	28,3
28 x 5	42	29,2	56	38,9
30 x 6	45	33,4	60	44,5
32 x 6	48	35,8	64	47,8
36 x 6	54	48,9	72	65,3
40 x 7	60	60,2	80	80,3
44 x 7	66	73,1	88	97,5
48 x 8	72	87,2	96	116,3
50 x 8	75	94,9	100	126,5
52 x 8	78	102,9	104	137,3
60 x 9	90	137,3	120	183,0
70 x 10	105	211,3	-	-

PA6.6 with MoS2, a Special Polyamide, Suitable for Nuts with Trapezoidal Thread

Material Properties

This plastic is a low-maintenance material for bearings. Compared to other plastics it has a much higher wear resistance. The spec. surface pressure is 35 N/mm² at 23°C/ 50% RH. Threaded nuts made from plastic are more resistant against loads caused by impacts or shocks then red brass and grey cast iron-nuts. The material is also quieter than red brass and grey cast iron and increases the service life.

Properties	Unit of Measurement	Plastic PA6.6 with MoS2
Tensile Strength	N/mm²	90 (82)
Elongation at Break	%	20 (70)
Flexural Modus	N/mm²	3600 (1500)
Compressive Strength at 1% Deformation	N/mm²	37
Izod Impact, Notched	kJ/m²	3.35 (>10)
Shore Hardness D	D	80 - 90
Coefficient of Linear Thermal Expansion	10^{-6}/°C	63
Thermal Conductivity	W/mk	0.21
Thermal Compr. Strength 0.46 N/mm² °C		204 - 254
Melting Point	°C	260
Resistivity	Ω cm	$>10^{13}$ (10^{12})
Dielelectric Constant	-	3.6 (5.1)
Dissipation Factor	-	0.03 (0.2)
Water Absorption 24 hours	%	0.5 - 1.3
Water Absorption max.	%	6 - 8

Figures are valid for a water content below 0.2%, Figures in ( ) at standard climate 23°C/50% RF. Chemically resistant against all solutions, lubricants, hydrocarbons, ketones, aqueous solutions and alkaline solutions pH5-pH11. Chemically unstable against phenols, cresols, formic acid, concentrated mineral acids and alkali, oxidisers including halogens.

Wear Properties

Common constructions (threaded spindle made from steel, nut made from grey cast iron or bronze) lead to wear of the threaded spindle and the nut. A threaded nut made from plastic does not affect the spindle, i.e. if unexpected wear occurs, only the nut has to be changed. In the pairing steel/plastic there is generally no hardening of the spindle required.

Fixing Plastic Nuts

The plastic nut can be pressed into the housing with a slight over-size of 0.1 - 0.2 mm. It can be secured against turning and displacement with any of the common locking elements used in machine building, or with a flange attached to the face side.

Attention: The over-size used for pressing the nut in passes on 1 : 1 to the inner diameter which reduces the clearance.

Note

For systems with relatively high loads or extreme operating conditions we would advise you to contact us.

Maintenance

The nuts only need to be lubricated on the first mounting, after that they are maintenance free. In order to prolong the service life of the nuts, they can be relubricated, if required. Any fat not containing molybdenum sulphide (Molykote) can be used.

Tolerances

Other than for the rest of the trapezoidal-threaded nuts, the flank clearance is kept at the upper tolerance limit, as the plastic expands when heating up.

Comparison of Friction Coefficients

Spindle / Nut	Static		Dynamic		Dry-Running
	Dry	Oil Lubricated	Dry	Oil Lubricated	Characteristics
Steel / Steel	0.33	0.10	0.15	0.05	none
Steel / Cast iron	0.20	0.10	0.10	0.05	limited
Steel / Red brass	0.20	0.10	0.10	0.05	good
Steel / plastic	0.10	0.04	0.10	0.01-0.04	excellent
Stainl. steel / Stainl. steel	0.33	0.1	0.15	0.05	none
Steel / Stainless steel	0.33	0.1	0.15	0.05	none



Reworking within 24h-service possible. Custom made parts on request.

Metric ISO-Trapezoidal-Threaded Spindles DIN 103, Single-Thread, Right Hand and Left Hand

Material: C15

Tolerance zone 7e, version rolled.

Nuts with trapezoidal thread made from plastic, steel, stainless steel, grey cast iron and red brass page 313.

Ordering Details: e.g.: Product No. 640 010 00, Spindle Tr.10x3 Right Hand, 1000 mm



Product No. Single Thread Right Hand	Product No. Single Thread Left Hand	Trapez. Thread Outside Ø x Lead mm	Length mm	Flanks Ø min. mm	Flanks Ø max. mm	Core Ø min. mm	Weight kg
640 010 00	640 410 00	Tr. 10 x 3*	1000	8,191	8,415	5,84	0,6
640 110 00	640 510 00		1500				0,9
640 210 00	640 610 00		2000				1,2
640 310 00	640 810 00		3000				1,8
640 012 00	640 412 00	Tr. 12 x 3	1000	10,191	10,415	7,84	0,8
640 112 00	640 512 00		1500				1,2
640 212 00	640 612 00		2000				1,6
640 312 00	640 812 00		3000				2,4
640 014 00	640 414 00	Tr. 14 x 4*	1000	11,640	12,415	8,80	0,9
640 114 00	640 514 00		1500				1,35
640 214 00	640 614 00		2000				1,8
640 314 00	640 814 00		3000				2,7
640 016 00	640 416 00	Tr. 16 x 4	1000	13,640	13,905	10,80	1,4
640 116 00	640 516 00		1500				2,1
640 216 00	640 616 00		2000				2,8
640 316 00	640 816 00		3000				4,2
640 018 00	640 418 00	Tr. 18 x 4	1000	15,640	15,905	12,80	1,6
640 118 00	640 518 00		1500				2,4
640 218 00	640 618 00		2000				3,2
640 318 00	640 818 00		3000				4,8
640 020 00	640 420 00	Tr. 20 x 4	1000	17,640	17,905	14,80	2,1
640 120 00	640 520 00		1500				3,15
640 220 00	640 620 00		2000				4,2
640 320 00	640 820 00		3000				6,3
640 024 00	640 424 00	Tr. 24 x 5	1000	21,094	21,394	17,50	2,9
640 124 00	640 524 00		1500				4,35
640 224 00	640 624 00		2000				5,8
640 324 00	640 824 00		3000				8,7
640 028 00	640 428 00	Tr. 28 x 5	1000	25,049	25,390	21,50	3,9
640 128 00	640 528 00		1500				5,85
640 228 00	640 628 00		2000				7,8
640 328 00	640 828 00		3000				11,7
640 030 00	640 430 00	Tr. 30 x 6	1000	26,547	26,882	21,90	4,7
640 130 00	640 530 00		1500				7,05
640 230 00	640 630 00		2000				9,4
640 330 00	640 830 00		3000				14,1
640 032 00	640 432 00	Tr. 32 x 6	1000	28,547	28,882	23,90	5,1
640 132 00	640 532 00		1500				7,65
640 232 00	640 632 00		2000				10,2
640 332 00	640 832 00		3000				15,3
640 036 00	640 436 00	Tr. 36 x 6	1000	32,547	32,882	27,90	6,7
640 136 00	640 536 00		1500				10,05
640 236 00	640 636 00		2000				13,4
640 336 00	640 836 00		3000				20,1
640 040 00	640 440 00	Tr. 40 x 7	1000	36,020	36,375	30,50	9,4
640 140 00	640 540 00		1500				14,1
640 240 00	640 640 00		2000				18,8
640 340 00	640 840 00		3000				28,2
640 044 00	640 444 00	Tr. 44 x 7	1000	40,020	40,375	34,50	9,7
640 144 00	640 544 00		1500				14,55
640 244 00	640 644 00		2000				19,40
640 344 00	640 844 00		3000				29,1
640 048 00	640 448 00	Tr. 48 x 8	1000	43,468	43,868	37,80	11,7
640 148 00	640 548 00		1500				17,55
640 248 00	640 648 00		2000				23,4
640 348 00	640 848 00		3000				35,1
640 050 00	640 450 00	Tr. 50 x 8	1000	45,468	45,868	39,30	12,6
640 150 00	640 550 00		1500				18,9
640 250 00	640 650 00		2000				25,2
640 350 00	640 850 00		3000				37,8
640 052 00	640 452 00	Tr. 52 x 8	1000	47,468	47,868	41,17	14,4
640 152 00	640 552 00		1500				21,6
640 252 00	640 652 00		2000				28,8
640 352 00	640 852 00		3000				43,2
640 060 00	640 460 00	Tr. 60 x 9	1000	54,935	55,3000	48,15	18,9
640 160 00	640 560 00		1500				28,35
640 260 00	640 660 00		2000				37,8
640 360 00	640 860 00		3000				56,7
640 070 00	640 470 00	Tr. 70 x 10	1000	64,425	64,850	57,00	25,7
640 170 00	640 570 00		1500				38,55
640 270 00	640 670 00		2000				51,4
640 370 00	640 870 00		3000				77,1

Rolled Spindles

High grade raw material C15, heat treated by the manufacturer and without exception delivered by German smelting works, and a complex machine and tool technology lead to our excellent quality in the spindle production.

The strong densification causes frictional heat which has to be dissipated using a re-cooling or filtering system. If the compressed oil is changed continuously, press-polished flanks without any leaf-shaped marks can be achieved.

To master the rolling process, in order to achieve exact leads and profiles up to ±0.03 mm/300 mm (standard ±0.15/300, material 1.4305 ±0.3/300) and high surface quality, has only become possible by means of complex measuring and controlling systems in combination with a new generation of machines with swiveling toolholders.

Straightness:
Trapezoid 10 - 24 mm max. 0.8 mm/m,
Trapezoid 28 - 70 mm max. 1.2 mm/m

Straightness on request:
Up to size Tr. 16: 0.10 mm/m.
From size Tr. 20: 0.05 mm/m.

* Lead angle is not in accordance with DIN 103.



Reworking within 24h-service possible. Custom made parts on request.

Metric ISO-Trapezoidal-Threaded Spindles DIN 103, Stainless, Single-Thread, Right and Left Hand

Material: Stainless steel 1.4305.

STAINLESS

Tolerance zone 7e. Version: up to Tr 40x7 rolled, above this size whirled.

Nuts with trapezoidal thread made from plastic, Steel, Stainless steel, grey cast iron and red brass page 313.



Ordering Details: e.g.: Product No. 640 990 10, Stainless Threaded Spindle, Tr. 10x3 Right Hand, 1000 mm

Product No. Single Thread Right Hand	Product No. Single Thread Left Hand	Trapez. Thread Outside Ø x Lead mm	Length mm	Flanks Ø min. mm	Flanks Ø max. mm	Core Ø min. mm	Weight kg
640 990 10	640 994 10	Tr. 10 x 3*	1000	8,191	8,415	5,84	0,6
640 991 10	640 995 10		1500				0,9
640 992 10	640 996 10		2000				1,2
640 993 10	640 998 10		3000				1,8
640 990 12	640 994 12	Tr. 12 x 3	1000	10,191	10,415	7,84	0,8
640 991 12	640 995 12		1500				1,2
640 992 12	640 996 12		2000				1,6
640 993 12	640 998 12		3000				2,4
640 990 14	640 994 14	Tr. 14 x 4*	1000	11,640	12,415	8,80	0,9
640 991 14	640 995 14		1500				1,35
640 992 14	640 996 14		2000				1,8
640 993 14	640 998 14		3000				2,7
640 990 16	640 994 16	Tr. 16 x 4	1000	13,640	13,905	10,80	1,4
640 991 16	640 995 16		1500				2,1
640 992 16	640 996 16		2000				2,8
640 993 16	640 998 16		3000				4,2
640 990 18	640 994 18	Tr. 18 x 4	1000	15,640	15,905	12,80	1,6
640 991 18	640 995 18		1500				2,4
640 992 18	640 996 18		2000				3,2
640 993 18	640 998 18		3000				4,8
640 990 20	640 994 20	Tr. 20 x 4	1000	17,640	17,905	14,80	2,1
640 991 20	640 995 20		1500				3,15
640 992 20	640 996 20		2000				4,2
640 993 20	640 998 20		3000				6,3
640 990 24	640 994 24	Tr. 24 x 5	1000	21,094	21,394	17,50	2,9
640 991 24	640 995 24		1500				4,35
640 992 24	640 996 24		2000				5,8
640 993 24	640 998 24		3000				8,7
640 990 28	640 994 28	Tr. 28 x 5	1000	25,049	25,390	21,50	3,9
640 991 28	640 995 28		1500				5,85
640 992 28	640 996 28		2000				7,8
640 993 28	640 998 28		3000				11,7
640 990 30	640 994 30	Tr. 30 x 6	1000	26,547	26,882	21,90	4,7
640 991 30	640 995 30		1500				7,05
640 992 30	640 996 30		2000				9,4
640 993 30	640 998 30		3000				14,1
640 990 36	640 994 36	Tr. 36 x 6	1000	32,547	32,882	27,90	6,7
640 991 36	640 995 36		1500				10,05
640 992 36	640 996 36		2000				13,4
640 993 36	640 998 36		3000				20,1
640 990 40	640 994 40	Tr. 40 x 7	1000	36,020	36,375	30,50	9,4
640 991 40	640 995 40		1500				14,1
640 992 40	640 996 40		2000				18,8
640 993 40	640 998 40		3000				28,2
640 990 50	640 994 50	Tr. 50 x 8	1000	45,468	45,868	40,37	12,6
640 991 50	640 995 50		1500				18,9
640 992 50	640 996 50		2000				25,2
640 993 50	640 998 50		3000				37,8

Rolled Spindles (up to Tr. 40x7)

High grade raw material and complex machine and tool technology lead to our excellent quality in production of threaded spindles.

The strong densification causes frictional heat which has to be dissipated using a re-cooling or filtering system. If the compressed oil is changed continuously, press-polished flanks without any leaf-shaped marks can be achieved.

To master the rolling process, in order to achieve exact leads and profiles up to ±0.03 mm/300 mm (standard ±0.15/300, material 1.4305 ±0.3/300) and high surface quality, has only become possible by means of complex measuring and controlling systems in combination with a new generation of machines with swiveling toolholders.

Straightness:
Trapezoid 10 - 24 mm max. 0.8 mm/m,
Trapezoid 28 - 70 mm max. 1.2 mm/m

Straightness on request:
Up to size Tr. 16: 0.10 mm/m.
From size Tr. 20: 0.05 mm/m.

* Lead not in accordance with DIN 103.



Chain Tensioners page 322

Metric ISO-Trapezoidal-Thread Spindles DIN 103, Double-Thread, Right Hand

Material: C15.
Stainless Steel 1.4305.

STAINLESS

Tolerance zone 7 e. Right Hand.

Double-threaded nuts made from plastic, steel and red brass page 316.

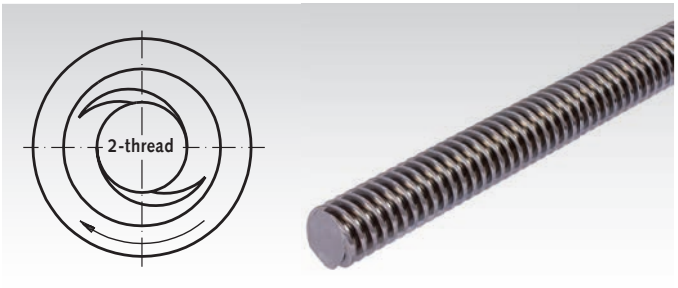

Ordering Details: e.g.: Product No. 645 012 00, Threaded Spindle C15, Double-Thread, Right Hand, Tr. 12 x 6 P3 x 1000 mm

Product No. Steel C15	Product No. Stainles St. 1.4305	Trapezoidal Thread Outside Ø x Lead mm	Length mm	Flanks Ø min. mm	Flanks Ø max. mm	Core Ø min. mm	Weight kg
645 012 00	645 990 12	Tr. 12 x 6 P3	1000	10,191	10,415	7,84	0,8
645 112 00	645 991 12		1500				1,2
645 212 00	645 992 12		2000				1,6
645 312 00	645 993 12		3000				2,4
645 016 00	645 990 16	Tr. 16 x 8 P4	1000	13,640	13,905	10,80	1,4
645 116 00	645 991 16		1500				2,1
645 216 00	645 992 16		2000				2,8
645 316 00	645 993 16		3000				4,2
645 020 00	645 990 20	Tr. 20 x 8 P4	1000	17,640	17,905	14,80	2,1
645 120 00	645 991 20		1500				3,15
645 220 00	645 992 20		2000				4,2
645 320 00	645 993 20		3000				6,3
645 024 00	645 990 24	Tr. 24 x 10 P5	1000	21,094	21,394	17,50	2,9
645 124 00	645 991 24		1500				4,35
645 224 00	645 992 24		2000				5,8
645 324 00	645 993 24		3000				8,7
645 030 00	645 990 30	Tr. 30 x 12 P6	1000	26,547	26,882	21,90	4,7
645 130 00	645 991 30		1500				7,05
645 230 00	645 992 30		2000				9,4
645 330 00	645 993 30		3000				14,1
645 040 00	645 990 40	Tr. 40 x 14 P7	1000	36,020	36,375	30,50	9,4
645 140 00	645 991 40		1500				14,1
645 240 00	645 992 40		2000				18,8
645 340 00	645 993 40		3000				28,2

Rolled Spindles

High grade raw material and complex machine and tool technology lead to our excellent quality in production of threaded spindles.

The strong densification causes frictional heat which has to be dissipated using a re-cooling or filtering system. If the compressed oil is changed continuously, press-polished flanks without any leaf-shaped marks can be achieved.

To master the rolling process, in order to achieve exact leads and profiles up to ±0.03 mm/300 mm (standard ±0.15/300, material 1.4305 ±0.3/300) and high surface quality, has only become possible by means of complex measuring and controlling systems in combination with a new generation of machines with swiveling toolholders.

Straightness:
Trapezoid 10 - 24 mm max. 0.8 mm/m,
Trapezoid 28 - 70 mm max. 1.2 mm/m

Straightness on request:
Up to size Tr. 16: 0.10 mm/m.
From size Tr. 20: 0.05 mm/m.



Chain Tensioners page 322



Reworking within 24h-service possible. Custom made parts on request.

Round Nuts with Metric ISO-Trapezoidal Thread DIN 103, Single-Thread

Material: Steel C35Pb.
Stainless steel 1.4305.
Red brass Rg7 (GC-CuSn7ZnPb).
Plastic (PA6.6 with MoS2).

Tolerance zone 7H.

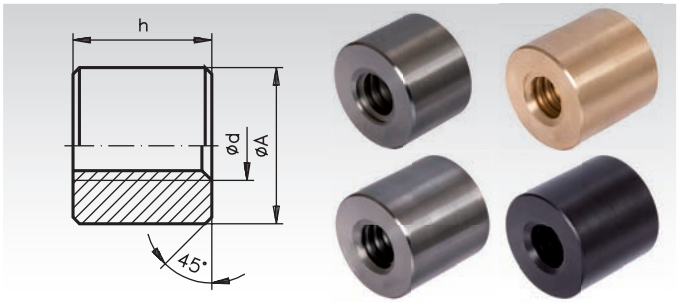

Ordering Details: e.g.: Product No. 643 010 00, Round Nut, Steel, Tr. 10 x 3, Single Thread Right Hand

Single-Thread, Right Hand

Product No. Steel h = 1,5 x d	Product No. Steel h = 2 x d	Product No. Stainless Steel h = 1,5 x d	Product No. Res Brass h = 2 x d	Product No. Plastic h = 2 x d	Trapezoidal Thread Ø d mm	DIN ISO 2768m h=1,5xd mm	DIN ISO 2768m h=2xd mm	DIN 668 ØA^{h11}* mm	Weight Steel 1,5 x d kg	Weight Steel 2 x d kg	Weight Brass 2 x d kg	Weight Plastic 2 x d kg
643 010 00	643 210 00	-	643 310 00	-	10 x 3**	15	20	22	0,04	0,06	0,06	-
643 012 00	643 212 00	643 990 12	643 312 00	643 412 00	12 x 3	18	24	26	0,06	0,08	0,1	0,02
643 014 00	643 214 00	-	643 314 00	-	14 x 4**	21	28	30	0,1	0,12	0,14	-
643 016 00	643 216 00	643 990 16	643 316 00	643 416 00	16 x 4	24	32	36	0,16	0,22	0,24	0,04
643 018 00	643 218 00	-	643 318 00	643 418 00	18 x 4	27	36	40	0,22	0,32	0,37	0,05
643 020 00	643 220 00	643 990 20	643 320 00	643 420 00	20 x 4	30	40	45	0,32	0,42	0,5	0,06
643 024 00	643 224 00	643 990 24	643 324 00	643 424 00	24 x 5	36	48	50	0,44	0,6	0,7	0,08
643 028 00	643 228 00	643 990 28	643 328 00	643 428 00	28 x 5	42	56	60	0,76	1,0	1,12	0,14
643 030 00	643 230 00	643 990 30	643 330 00	643 430 00	30 x 6	45	60	60	0,78	1,06	1,2	0,16
643 032 00	643 232 00	-	643 332 00	643 432 00	32 x 6	48	64	60	0,8	1,08	1,2	0,16
643 036 00	643 236 00	643 990 36	643 336 00	643 436 00	36 x 6	54	72	75	1,48	1,98	2,3	0,28
643 040 00	643 240 00	643 990 40	643 340 00	643 440 00	40 x 7	60	80	80	1,8	2,44	2,8	0,36
643 044 00	643 244 00	-	643 344 00	-	44 x 7	66	88	80	1,9	2,52	2,86	-
643 048 00	643 248 00	-	643 348 00	-	48 x 8	72	96	90	2,68	3,58	4,08	-
643 050 00	643 250 00	-	643 350 00	643 450 00	50 x 8	75	100	90	2,72	3,64	4,12	0,54
643 052 00	643 252 00	-	643 352 00	-	52 x 8	78	104	90	2,72	3,64	4,2	-
643 060 00	643 260 00	-	643 360 00	643 460 00	60 x 9	90	120	100	3,76	4,96	5,7	0,74
643 070 00	-	-	-	-	70 x 10	105	-	110	4,96	- -	-	

Single-Thread, Left Hand

Product No. Steel h = 1,5 x d	Product No. Steel h = 2 x d	Product No. Stainless Steel h = 1,5 x d	Product No. Res Brass h = 2 x d	Product No. Plastic h = 2 x d	Trapezoidal Thread Ø d mm	DIN ISO 2768m h=1,5xd mm	DIN ISO 2768m h=2xd mm	DIN 668 ØA^{h11}* mm	Weight Steel 1,5 x d kg	Weight Steel 2 x d kg	Weight Brass 2 x d kg	Weight Plastic 2 x d kg
643 510 00	643 710 00	-	643 810 00	-	10 x 3**	15	20	22	0,04	0,06	0,06	-
643 512 00	643 712 00	643 995 12	643 812 00	643 912 00	12 x 3	18	24	26	0,06	0,08	0,1	0,02
643 514 00	643 714 00	-	643 814 00	-	14 x 4**	21	28	30	0,1	0,12	0,14	-
643 516 00	643 716 00	643 995 16	643 816 00	643 916 00	16 x 4	24	32	36	0,16	0,22	0,24	0,04
643 518 00	643 718 00	-	643 818 00	643 918 00	18 x 4	27	36	40	0,24	0,32	0,37	0,05
643 520 00	643 720 00	643 995 20	643 820 00	643 920 00	20 x 4	30	40	45	0,32	0,42	0,5	0,06
643 524 00	643 724 00	643 995 24	643 824 00	643 924 00	24 x 5	36	48	50	0,44	0,6	0,7	0,08
643 528 00	643 728 00	-	643 828 00	643 928 00	28 x 5	42	56	60	0,76	1,0	1,12	0,14
643 530 00	643 730 00	643 995 30	643 830 00	643 930 00	30 x 6	45	60	60	0,78	1,06	1,2	0,16
643 532 00	643 732 00	-	643 832 00	643 932 00	32 x 6	48	64	60	0,8	1,08	1,2	0,16
643 536 00	643 736 00	-	643 836 00	643 936 00	36 x 6	54	72	75	1,48	1,98	2,3	0,28
643 540 00	643 740 00	643 995 40	643 840 00	643 940 00	40 x 7	60	80	80	1,8	2,44	2,8	0,36
643 544 00	643 744 00	-	643 844 00	-	44 x 7	66	88	80	1,9	2,52	2,86	-
643 548 00	643 748 00	-	643 848 00	-	48 x 8	72	96	90	2,68	3,58	4,08	-
643 550 00	643 750 00	-	643 850 00	643 950 00	50 x 8	75	100	90	2,72	3,64	4,12	0,54
643 552 00	643 752 00	-	643 852 00	-	52 x 8	78	104	90	2,72	3,64	4,2	-
643 560 00	643 760 00	-	643 860 00	643 960 00	60 x 9	90	120	100	3,76	4,96	5,7	0,74
643 570 00	-	-	-	-	70 x 10	105	-	110	4,96	-	-	-

Comparison of friction coefficients see page 309 bottom.

* Tolerance h11 does not apply to plastic nuts.

** Lead angle is not in accordance with DIN 103.



Reworking within 24h-service possible. Custom made parts on request.

Round Flange Nuts with Metric ISO-Trapezoidal Thread DIN 103, Single-Thread

Material: Grey cast iron GG25
Red brass Rg7 (GC-CuSn 7ZnPb).

Tolerance zone 7H.

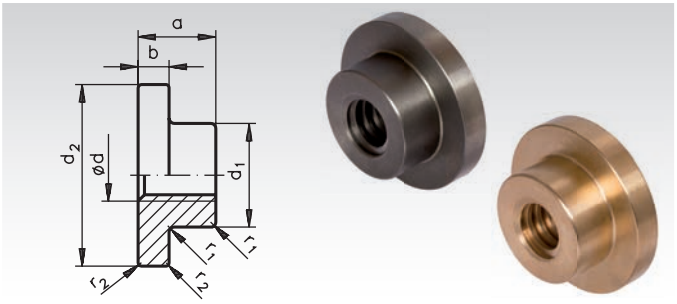

Ordering Details: e.g.: Product No. 644 010 00, round flange nut made from GG25, Tr. 10 x 3, single thread, right hand

Single thread, right hand **Single thread, left hand**

Single thread, right hand Product No. Grey Cast Iron	Single thread, right hand Product No. Red Brass	Single thread, left hand Product No. Grey Cast Iron	Single thread, left hand Product No. Red Brass	Trapez. thread Ø d mm	DIN ISO 2768 m a mm	b mm	Ø^{h11} d_1 mm	d_2 mm	r_1 mm	r_2 mm	Weight Iron kg	Brass kg
644 010 00	644 110 00	644 310 00	644 410 00	10 x 3*	14	5	20	33	0,5	0,3	0,04	0,05
644 012 00	644 112 00	644 312 00	644 412 00	12 x 3	18	6	22	40	0,5	0,3	0,08	0,09
644 014 00	644 114 00	644 314 00	644 414 00	14 x 4*	22	10	30	50	1,0	0,5	0,19	0,23
644 016 00	644 116 00	644 316 00	644 416 00	16 x 4	22	10	30	50	1,0	0,5	0,18	0,22
-	644 118 00	-	644 418 00	18 x 4	24	10	36	60	1,0	0,5	-	0,30
644 020 00	644 120 00	644 320 00	644 420 00	20 x 4	24	10	36	60	1,0	0,5	0,26	0,32
644 024 00	644 124 00	644 324 00	644 424 00	24 x 5	30	11	45	70	1,0	0,5	0,45	0,54
644 028 00	644 128 00	644 328 00	644 428 00	28 x 5	47	14	58	88	1,0	0,5	1,06	1,29
644 030 00	644 130 00	644 330 00	644 430 00	30 x 6	47	14	58	88	1,0	0,5	1,04	1,26
644 032 00	644 132 00	644 332 00	644 432 00	32 x 6	47	14	58	88	1,0	0,5	1,00	1,20
644 036 00	644 136 00	644 336 00	644 436 00	36 x 6	58	18	80	112	2,0	1,0	2,35	2,84
644 040 00	644 140 00	644 340 00	644 440 00	40 x 7	63	18	80	137	2,0	1,0	3,04	3,67
644 044 00	644 144 00	644 344 00	644 444 00	44 x 7	63	18	80	137	2,0	1,0	2,93	3,53
644 048 00	644 148 00	644 348 00	644 448 00	48 x 8	68	18	90	167	2,0	1,0	4,35	5,25
644 050 00	644 150 00	644 350 00	644 450 00	50 x 8	68	18	90	167	2,0	1,0	4,22	5,10
644 052 00	644 152 00	644 352 00	644 452 00	52 x 8	68	18	90	167	2,0	1,0	4,22	5,10
644 060 00	644 160 00	644 360 00	644 460 00	60 x 9	68	18	90	167	2,0	1,0	3,85	4,65

* Lead not according to DIN 103.

Ready-to-Install Flange Nuts with Metric ISO-Trapezoidal Thread DIN 103, Single-Thread

Material: Grey cast iron GG25
Red brass Rg7 (GC-CuSn7ZnPb).

Tolerance zone 7H.

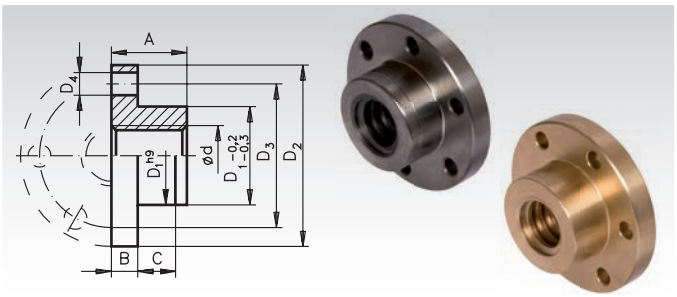

Ordering Details: e.g.: Product No. 644 770 16, flange nut made from GG25, Tr. 16 x 4, single thread, right hand

Single thread, right hand **Single thread, left hand**

Artikel-No. single thread right hand Grey Cast Iron	Artikel-No. single thread right hand Red Brass	Artikel-No. single thread left hand Grey Cast Iron	Artikel-No. single thread left hand Red Brass	Thread Ød mm	D_1 mm	DIN ISO 2768 m D_2 mm	D_3 mm	6 x D_4 mm	A mm	B mm	C mm	Weight Grey Cast kg	Rg kg
644 770 16	644 771 16	644 773 16	644 774 16	16 x 4	26	48	38	6	20	7	10	0,12	0,13
-	644 771 18	-	644 774 18	18 x 4	30	58	45	7	22	8	12	-	0,22
644 770 20	644 771 20	644 773 20	644 774 20	20 x 4	30	58	45	7	22	8	12	0,17	0,20
644 770 24	644 771 24	644 773 24	644 774 24	24 x 5	40	72	58	7	28	10	12	0,36	0,42
-	644 771 28	-	644 774 28	28 x 5	45	78	65	7	35	10	15	-	0,59
644 770 30	644 771 30	644 773 30	644 774 30	30 x 6	50	82	68	7	44	12	15	0,85	0,95
644 770 36	644 771 36	644 773 36	644 774 36	36 x 6	55	110	85	7	55	15	15	1,45	1,60
644 770 40	644 771 40	644 773 40	644 774 40	40 x 7	60	130	95	9	60	15	20	2,00	2,18
644 770 50	644 771 50	644 773 50	644 774 50	50 x 8	80	160	120	11	65	15	20	3,25	3,68
644 770 60	644 771 60	644 773 60	644 774 60	60 x 9	80	160	120	11	65	15	20	2,95	3,26

Comparison of friction coefficients see page 309.



Reworking within 24h-service possible. Custom made parts on request.

Hexagonal Nuts with Metric ISO-Trapezoidal Thread DIN 103, Single-Thread

Material: Steel C35Pb.
Stainless steel 1.4305, Stainless.

Tolerance zone 7H.

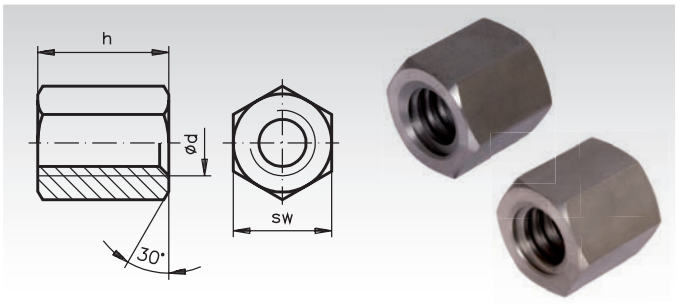

Ordering Details: e.g.: Product No. 643 110 00, Hexagonal Nut, Steel, Tr. 10 x 3, Single-Thread, Right Hand

Single-Thread, Right Hand

Product No. Steel	Product No. Stainless Steel	Trapezoidal Thread Ø d mm	DIN ISO 2768 m h = 1,5 x d mm	DIN 176 sw mm	Weight kg
643 110 00	-	10 x 3*	15	17	0,02
643 112 00	**643 991 12**	12 x 3	18	19	0,03
643 114 00	-	14 x 4*	21	22	0,04
643 116 00	**643 991 16**	16 x 4	24	27	0,08
643 118 00	-	18 x 4	27	27	0,10
643 120 00	**643 991 20**	20 x 4	30	30	0,12
643 124 00	**643 991 24**	24 x 5	36	36	0,20
643 128 00	**643 991 28**	28 x 5	42	46	0,42
643 130 00	**643 991 30**	30 x 6	45	46	0,42
643 132 00	-	32 x 6	48	46	0,42
643 136 00	**643 991 36**	36 x 6	54	55	0,72
643 140 00	**643 991 40**	40 x 7	60	65	1,20
643 144 00	-	44 x 7	66	65	1,18
643 148 00	-	48 x 8	72	75	1,82
643 150 00	-	50 x 8	75	75	1,80
643 152 00	-	52 x 8	78	75	1,80
643 160 00	-	60 x 9	90	90	3,18
643 170 00	-	70 x 10	105	90	2,86

Single-Thread, Left Hand

Product No. Steel	Product No. Stainless Steel	Trapezoidal Thread Ø d mm	DIN ISO 2768 m h = 1,5 x d mm	DIN 176 sw mm	Weight kg
643 610 00	-	10 x 3*	15	17	0,02
643 612 00	**643 996 12**	12 x 3	18	19	0,03
643 614 00	-	14 x 4*	21	22	0,04
643 616 00	**643 996 16**	16 x 4	24	27	0,08
643 618 00	-	18 x 4	27	27	0,10
643 620 00	**643 996 20**	20 x 4	30	30	0,12
643 624 00	**643 996 24**	24 x 5	36	36	0,20
643 628 00	-	28 x 5	42	46	0,42
643 630 00	-	30 x 6	45	46	0,42
643 632 00	-	32 x 6	48	46	0,42
643 636 00	-	36 x 6	54	55	0,72
643 640 00	-	40 x 7	60	65	1,20
643 644 00	-	44 x 7	66	65	1,18
643 648 00	-	48 x 8	72	75	1,82
643 650 00	-	50 x 8	75	75	1,80
643 652 00	-	52 x 8	78	75	1,80
643 660 00	-	60 x 9	90	90	3,18
643 670 00	-	70 x 10	105	90	2,86

Comparison of friction coefficients see page 309 bottom.

* Lead angle is not in accordance with DIN 103.



Reworking within 24h-service possible. Custom made parts on request.

Round Nuts with Metric ISO-Trapezoidal Thread DIN 103, Double-Thread

Material: Steel C35Pb.
Red brass Rg7 (GC-CuSn7ZnPb).
Plastic (PA6.6 with MoS2).

Tolerance zone 7H.

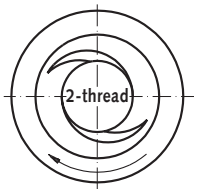

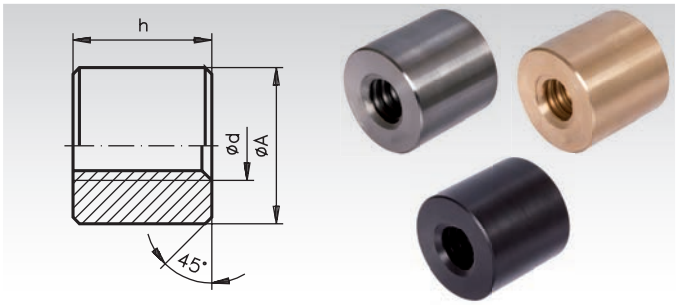

Ordering Details: e.g.: Product No. 645 612 00, Round Nut, Steel, Tr. 12 x 6 P3

Double-thread, Right Hand

Product No. Steel h = 1,5 x d	Product No. Red Brass h = 2 x d	Product No. Plastic h = 2 x d	Trapez. Thread Ø d mm	DIN ISO 2768m h=1,5xd mm	h=2xd mm	DIN 668 ØA^{h11*} mm	Weight Steel kg	Weight Red Brass kg	Weight Plastic kg
645 612 00	**645 812 00**	**645 912 00**	12 x 6 P3	18	24	26	0,06	0,1	0,02
645 616 00	**645 816 00**	**645 916 00**	16 x 8 P4	24	32	36	0,16	0,24	0,04
645 620 00	**645 820 00**	**645 920 00**	20 x 8 P4	30	40	45	0,3	0,5	0,06
645 624 00	**645 824 00**	**645 924 00**	24 x 10 P5	36	48	50	0,44	0,7	0,08
645 630 00	**645 830 00**	**645 930 00**	30 x 12 P6	45	60	60	0,8	1,2	0,16
645 640 00	**645 840 00**	**645 940 00**	40 x 14 P7	60	80	80	1,8	2,8	0,36

* Tolerance h11 does not apply to plastic nuts.

Round Flange Nuts with Metric ISO-Trapezoidal Thread DIN 103, Double-thread

Material: Grey cast iron GG25
Red brass Rg7 (GC-CuSn 7ZnPb).

Tolerance zone 7H.

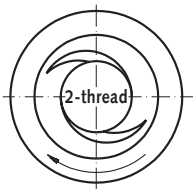

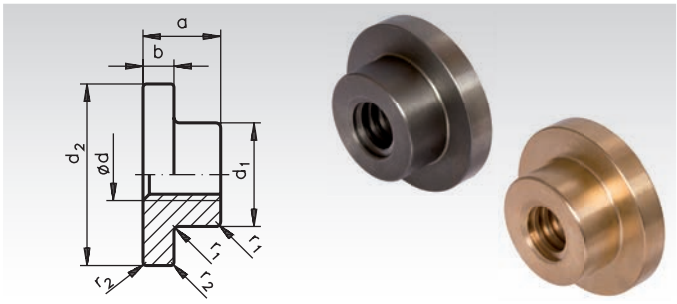

Ordering Details: e.g.: Product No. 645 440 12, round flange nut GG25, Tr. 12 x 6 P3

Double-thread, Right Hand

Product No. Grey Cast Iron	Product No. Red Brass	Tr. Thread Ød mm	DIN ISO 2768m a mm	b mm	Ø^{h11} d_1 mm	d_2 mm	r_1 mm	r_2 mm	Weight Grey Cast Iron kg	Weight Red Brass kg
645 440 12	**645 441 12**	12 x 6 P3	18	6	22	40	0,5	0,3	0,08	0,09
645 440 16	**645 441 16**	16 x 8 P4	22	10	30	50	1,0	0,5	0,18	0,22
645 440 20	**645 441 20**	20 x 8 P4	24	10	36	60	1,0	0,5	0,26	0,32
645 440 24	**645 441 24**	24 x 10 P5	30	11	45	70	1,0	0,5	0,45	0,54
645 440 30	**645 441 30**	30 x 12 P6	47	14	58	88	1,0	0,5	1,04	1,26
645 440 40	**645 441 40**	40 x 14 P7	63	18	80	137	2,0	1,0	3,04	3,67

Ready-to-Install Flange Nuts with Metric ISO-Trapezoidal Thread DIN 103, Double-thread

Material: Grey cast iron GG25
Red brass Rg7 (GC-CuSn7ZnPb).

Tolerance zone 7H.

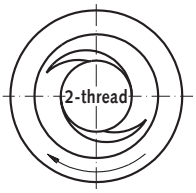

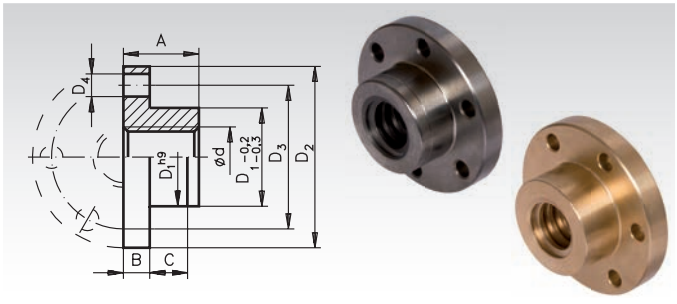

Ordering Details: e.g.: Product No. 645 770 16, flange nut GG25, Tr. 16 x 8 P4

Double-thread, Right Hand

Product No. Grey Cast Iron	Product No. Red Brass	Tr. Thread Ød mm	D_1 mm	DIN ISO 2768 m D_2 mm	D_3 mm	6 x D_4 mm	A mm	B mm	C mm	Weight Grey Cast kg	Weight Red Brass kg
645 770 16	**645 771 16**	16 x 8 P4	26	48	38	6	20	7	10	0,12	0,13
645 770 20	**645 771 20**	20 x 8 P4	30	58	45	7	22	8	12	0,17	0,20
645 770 24	**645 771 24**	24 x 10 P5	40	72	58	7	28	10	12	0,36	0,42
645 770 30	**645 771 30**	30 x 12 P6	50	82	68	7	44	12	15	0,85	0,95
645 770 40	**645 771 40**	40 x 14 P7	60	130	95	9	60	15	20	2,00	2,18

Comparison of friction coefficients see page 309.

Ball Screw Drives, Right Hand, Rolled Version

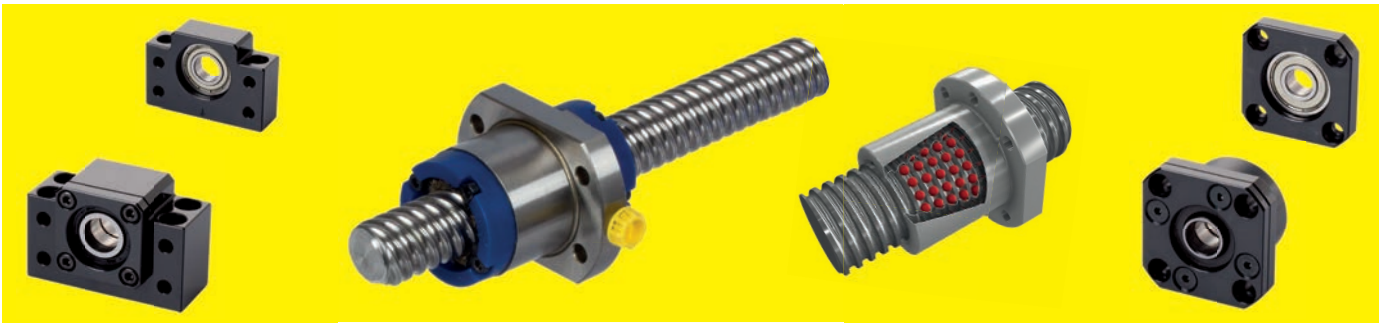

General Description
Because of the rolling friction, ball screw drives have a high efficiency up to 98% and require a relatively low drive power. Application: Conversion of a rotary movement into a linear one. Sometimes: Conversion of a linear movement into a rotary one (recommended only at high pitch, beginning from 1/3 of the nominal diameter).

No Self-Locking
Due to the low friction with high efficiency, ball screw drives require only a very low starting torque and are not no self-locking.

Designation according to DIN
According to DIN ISO 3408-1 and other standards, a ball screw drive consists of a spindle and, for minimum, one nut. The size has to be described by the nominal diameter and the pitch. Another essential dimension is the ball diameter. Further informations are required: The version (shape) of the nut, the pitch accuracy, the length and, if needed, the details of the spindle ends.

Conditions of Use and Lifespan
Ball screw drives are sensitive to dirt and high shock loads. Sufficiently protected, they reach a very long lifetime.

Catalog Spindles and Nuts

Catalog Version
Available from stock: Spindles right hand, rolled version in sizes from 8x2 to 63x10mm. Flanged nuts and cylindrical nuts. The production lengths are from 1,000mm up to 3,000mm, depending on the size. Partial lengths are also in the stock range. Other lengths and reworking of the spindle ends on request.

Rolled Spindles
Rolled from high quality bearing steel 100Cr6, hardened and straightened. Rolled spindles have a unsevered grain structure and high pitch accuracy. Rolling is the most economical method for serial production. The catalog spindles can get combined with the flanged nuts and cylindrical nuts on the following pages.

Axial Clearance
These ball screw drives are not backlash-free. Therefore the nuts run very easy with very low friction. The axial clearances are shown in the tables of the nuts. This play is only a disadvantage if a high positioning accuracy is required at alternating direction of force. To eleminate the axial play, two nuts can get braced against each other. Alternatively, the nuts could be equipped with better fitting ball sizes. This would be expensive.

Load Capacity
The static and dynamic load rates are shown in the tables of the nuts. These loads only apply to the use with axial play. At backlash-free preloaded nuts the load must be reduced, or the lifespan will get shorter. Additional to the axial load, the acceleration force and shock loads must be considered. Also the critical buckling force and critical spindle speed must be checked.

Maximum Speed
Ball screw drives allow very high speeds. But for sufficient lifespan, the speed should not exceed 3,000min^{-1} for longer time. And the length-depending, critical spindle speed must be considered.

Buckling Force and Critical Spindle Speed
At thin spindles under pressure load, there is a risk of buckling. At high speed, there is an additionally risk of resonant vibrations. For both, the calculation can be done like shown on page 307 for trapezoidal spindles.

Lubrication
Running without lubricant is not allowed. For grease lubrication, normal roller bearing grease is recommended. The lubricant consumption depends on the condition of use. Often a lubrication period of 200 hours is sufficient.

Bearing Units for Spindles Page 322

These ready-to-install bearing units for trapezoidal and ball-screw spindle drives are available from stock. The unit for the fixed side has two angular contact ball bearings, lightly preloaded, to withstand high axial and radial forces. The unit for the support side has a standard ball bearing to hold the spindle end in it´s position.

Shaft End Reworking for Spindles Page 325

The matching spindle reworking can be done by the customer or, at short time, by ***MÄDLER***®. The spindle reworking shown on page 325 is just a recommendation. For shaft processing, soft annealing (tempering) of the hardened spindle ends is necessary.

Ball Screw Spindles, Right Hand, Rolled

Material: Bearing steel 100Cr6, No. 1.3505, rolled.
Tensile strength 1570 N/mm², Brinell hardness 207 HB.

- Rolled ball screw spindle.
- To be combined with ***MÄDLER***® flanged ball screw nuts and cylindrical ball screw nuts.
- Pitch accuracy 52 µm/300 mm (T7).
- Straightness 0,1 mm/m.
- Special lengths and spindle end reworking against extra charge.

Temperature range: -20°C to +80°C (for short time to +110°C).

Ordering Details: e.g.: Product No. 640 080 21, Ball Screw Spindle 8x2, Length 245mm

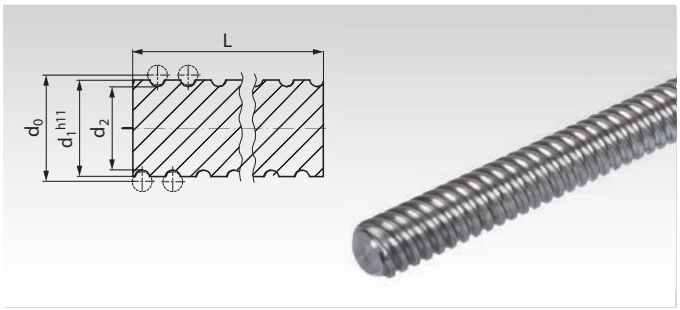

Product No.	Size	Length L^{+5mm}	Pitch-Ø d_0	Outer Ø d_1	Core Ø d_2	Weight
	mm	mm	mm	mm	mm	kg
640 080 21	8x2	245	8,41	8,11	7	0,09
640 080 22		495	8,41	8,11	7	0,18
640 080 23		1000	8,41	8,11	7	0,37
640 100 21	10x2	245	10	9,7	8,5	0,13
640 100 22		495	10	9,7	8,5	0,26
640 100 23		1000	10	9,7	8,5	0,53
640 120 41	12x4	645	12,15	11,71	9,5	0,48
640 120 42		1295	12,15	11,71	9,5	0,96
640 120 43		1950	12,15	11,71	9,5	1,45
640 120 44		2600	12,15	11,71	9,5	1,93
640 160 51	16x5	995	16,6	16	13,1	1,39
640 160 52		1495	16,6	16	13,1	2,08
640 160 53		1995	16,6	16	13,1	2,78
640 160 54		3000	16,6	16	13,1	4,18
640 161 01	16x10	995	16,44	15,7	12,7	1,32
640 161 02		1495	16,44	15,7	12,7	1,99
640 161 03		1995	16,44	15,7	12,7	2,66
640 161 04		3000	16,44	15,7	12,7	3,99
640 161 61	16x16	995	16,6	16	13,5	1,41
640 161 62		1495	16,6	16	13,5	2,12
640 161 63		1995	16,6	16	13,5	2,83
640 161 64		3000	16,6	16	13,5	4,25
640 200 51	20x5	695	20,6	20	17,2	1,56
640 200 52		1395	20,6	20	17,2	3,13
640 200 53		2100	20,6	20	17,2	4,70
640 200 54		2800	20,6	20	17,2	6,27
640 201 01	20x10	995	20,6	20	17	2,21
640 201 02		1495	20,6	20	17	3,33
640 201 03		1995	20,6	20	17	4,44
640 201 04		3000	20,6	20	17	6,67
640 202 01	20x20	645	20,74	19,9	17,2	1,43
640 202 02		1295	20,74	19,9	17,2	2,88
640 202 03		1950	20,74	19,9	17,2	4,34
640 202 04		2600	20,74	19,9	17,2	5,78
640 250 51	25x5	695	25,6	25	22,2	2,48
640 250 52		1395	25,6	25	22,2	4,98
640 250 53		2100	25,6	25	22,2	7,50
640 250 54		2800	25,6	25	22,2	9,99
640 251 01	25x10	670	25,5	24,8	21,8	2,33
640 251 02		1345	25,5	24,8	21,8	4,69
640 251 03		2025	25,5	24,8	21,8	7,05
640 251 04		2700	25,5	24,8	21,8	9,41
640 252 51	25x25	695	25,7	24,5	21,4	2,39
640 252 52		1395	25,7	24,5	21,4	4,79
640 252 53		2100	25,7	24,5	21,4	7,21
640 252 54		2800	25,7	24,5	21,4	9,61
640 320 51	32x5	695	32,6	32	29,2	4,13
640 320 52		1395	32,6	32	29,2	8,30
640 320 53		2100	32,6	32	29,2	12,49
640 320 54		2800	32,6	32	29,2	16,65
640 321 01	32x10	670	33,44	31,8	26,8	3,74
640 321 02		1345	33,44	31,8	26,8	7,51
640 321 03		2025	33,44	31,8	26,8	11,31
640 321 04		2700	33,44	31,8	26,8	15,07
640 322 01	32x20	670	32,4	31,2	28,2	3,80
640 322 02		1345	32,4	31,2	28,2	7,63
640 322 03		2025	32,4	31,2	28,2	11,48
640 322 04		2700	32,4	31,2	28,2	15,31
640 323 21	32x32	995	33,22	31,9	28,1	5,75
640 323 22		1495	33,22	31,9	28,1	8,65
640 323 23		1995	33,22	31,9	28,1	11,54
640 323 24		3000	33,22	31,9	28,1	17,35
640 400 51	40x5	695	40,6	40	37,2	6,54
640 400 52		1395	40,6	40	37,2	13,12
640 400 53		2100	40,6	40	37,2	19,75
640 400 54		2800	40,6	40	37,2	26,33
640 401 01	40x10	670	41,36	39,7	34,8	5,98
640 401 02		1345	41,36	39,7	34,8	12,00
640 401 03		2025	41,36	39,7	34,8	18,06
640 401 04		2700	41,36	39,7	34,8	24,08
640 501 01	50x10	995	51,34	49,9	44,7	14,21
640 501 02		1495	51,34	49,9	44,7	21,34
640 501 03		1995	51,34	49,9	44,7	28,48
640 501 04		3000	51,34	49,9	44,7	42,83
640 502 01	50x20	995	50,16	48,6	43,5	13,38
640 502 02		1495	50,16	48,6	43,5	20,10
640 502 03		1995	50,16	48,6	43,5	26,83
640 502 04		3000	50,16	48,6	43,5	40,34
640 631 01	63x10	995	64,4	62,9	57,7	20,04
640 631 02		1495	64,4	62,9	57,7	30,11
640 631 03		1995	64,4	62,9	57,7	40,18
640 631 04		3000	64,4	62,9	57,7	60,42

Bearing Units for Spindles Page 322

These ready-to-install bearing units for trapezoidal and ball-screw spindle drives are available from stock. The unit for the fixed side has two angular contact ball bearings, lightly preloaded, to withstand high axial and radial forces. The unit for the support side has a standard ball bearing to hold the spindle end in it´s position.

Shaft End Reworking for Spindles Page 325

The matching spindle reworking can be done by the customer or, at short time, by ***MÄDLER***®. The spindle reworking shown on page 325 is just a recommendation. For shaft processing, soft annealing (tempering) of the hardened spindle ends is necessary.

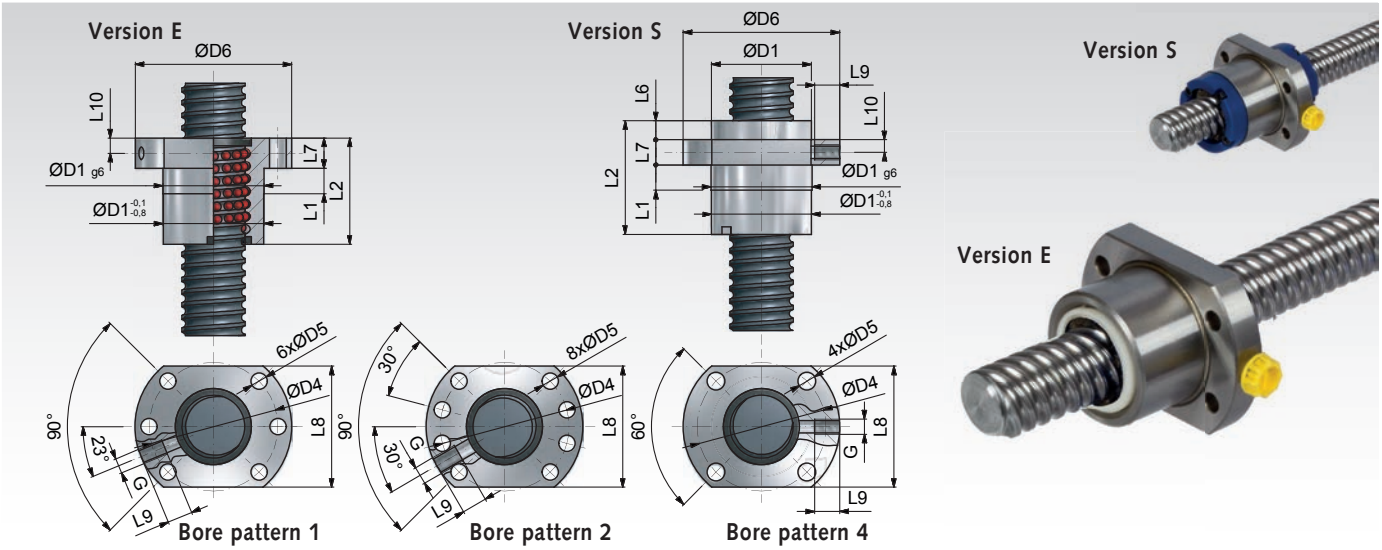

Material: Bearing steel 100Cr6, No. 1.3505.

To be combined with ***MÄDLER***® ball screw spindles.
The spindle has to be ordered separately.

Ordering Details: e.g.: Product No. 640 100 25, Flanged Ball Screw Nut 10x2mm

With axial clearance, for running with low friction.

Temperature range: -20°C to +80°C (for short time to +110°C).

Product No.	Size	Ball Ø	Turns per Circuit	Load rating $C_{dyn.}$	Load rating $C_{stat.}$	Axial Clearance	Weight
	mm	mm		kN	kN	mm	kg
640 080 25	8x2	1,2	3	1,39	2,52	0,06	0,05
640 100 25	10x2	1,2	3	1,51	3,02	0,06	0,08
640 120 45	12x4	2,381	3	4	6,7	0,07	0,1
640 160 55	16x5	3,175	3	7,65	13,2	0,07	0,16
640 161 05	16x10	3,5	3	6,8	12,6	0,1	0,16
640 161 65	16x16	2,778	1,7x2	6,5	12,8	0,07	0,2
640 200 55	20x5	3,175	3	8,6	17,1	0,07	0,2
640 201 05	20x10	3,175	3.8	8,5	18	0,07	0,2
640 202 05	20x20	3,175	1,7x2	9,8	21,4	0,07	0,15
640 250 55	25x5	3,175	3	9,8	23	0,07	0,25
640 251 05	25x10	3,5	3	8,7	20,5	0,1	0,32
640 252 55	25x25	3,969	1,7x2	12,7	35,2	0,1	0,6
640 320 55	32x5	3,175	5	16,9	51	0,07	0,6
640 321 05	32x10	6,35	3	26,1	53,1	0,15	0,64
640 322 05	32x20	3,969	1,8x2	13,8	34,6	0,1	0,8
640 323 25	32x32	4,762	1,7x2	21,4	52,6	0,12	0,9
640 400 55	40x5	3,175	5	19	66,2	0,07	0,8
640 401 05	40x10	6,35	3	30,1	71	0,15	0,92
640 501 05	50x10	6,35	5	53,1	155	0,15	1,61
640 502 05	50x20	6,35	3	48	137	0,15	2,7
640 631 05	63x10	6,35	5	60,7	206	0,15	2,4

Mounting

The ball screw nuts will be delivered with a plastic tube inside. This tube is a transport protection against loosing the balls and is also a mounting aid. When the tube is hold against the spindle end, the nut can get screwed onto the spindle without loosing balls. Before use, the nut and the spindle have to be lubricated. For grease lubrication, normal roller bearing grease is recommended. The lubricant consumption depends on the condition of use.

Dimensions

Size mm	Version	Bore pattern	D_1 mm	D_4 mm	D_5 mm	D_6 mm	L_1 mm	L_2 mm	L_6 mm	L_7 mm	L_8 mm	L_9 mm	L_{10} mm	G mm
8x2	E	4*	16	23	3,4	31	17	26	-	8	20	-	-	-
10x2	E	4	19	28	4,6	36	23	28	-	5	23	-	-	-
12x4	E	1	22	32	4,8	42	10	35	-	8	36	10	4	M6
16x5	E	1	28	38	5,5	48	10	42	-	10	40	10	5	M6
16x10	E	1	28	38	5,5	48	10	45	-	10	40	10	5	M6
16x16	S	4	32	42	4,5	53	-	48	12	10	38	10	5	M6
20x5	E	1	36	47	6,6	58	10	42	-	10	44	10	5	M6
20x10	E	1	36	47	6,6	58	10	56	-	10	44	10	5	M6
20x20	S	4	39	50	5,5	62	-	58	15,5	10	46	10	5	M6
25x5	E	1	40	51	6,6	62	10	42	-	10	48	10	5	M6
25x10	E	1	40	51	6,6	62	16	45	-	10	48	10	5	M6
25x25	S	4	47	60	6,6	74	-	67	15,5	12	56	10	6	M6
32x5	E	1	50	65	9	80	10	55	-	12	62	10	6	M6
32x10	E	1	53	65	9	80	16	69	-	12	62	10	6	M8x1
32x20	E	1	50	65	9	80	25	64	-	15	62	9	8	M6
32x32	S	4	58	74	9	92	-	85	22	15	68	10	7,5	M6
40x5	E	2	63	78	9	93	10	55	-	14	70	10	7	M6
40x10	E	2	63	78	9	93	16	71	-	14	70	10	7	M8x1
50x10	E	2	75	93	11	110	16	95	-	16	85	10	8	M8x1
50x20	E	2	85	103	11	125	22	125	-	18	95	10	9	M8x1
63x10	E	2	90	108	11	125	16	97	-	18	95	10	9	M8x1

* With countersinking for cap screws DIN 912.

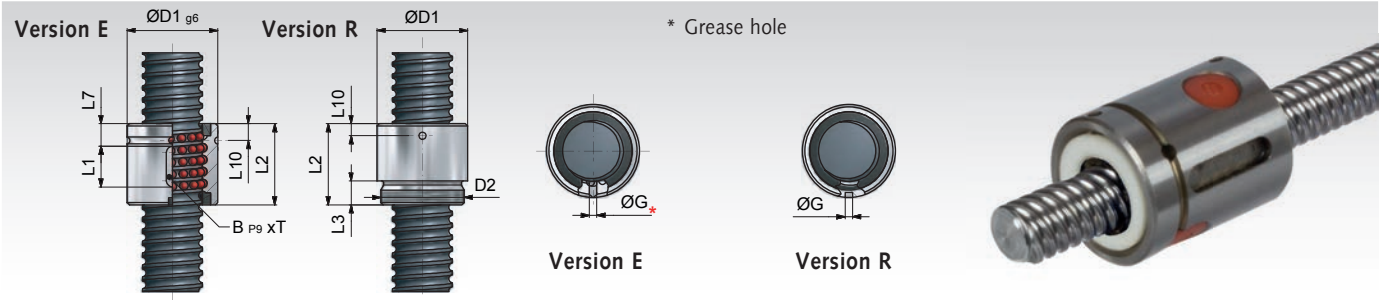

Material: Bearing steel 100Cr6, No. 1.3505.

To be combined with ***MÄDLER***® ball screw spindles.
The spindle has to be ordered separately.

With axial clearance, for running with low friction.

Temperature range: -20°C to +80°C (for short time to +110°C).

Ordering Details: e.g.: Product No. 640 100 26, Cylindrical Ball Screw Nut 10x2mm

Product No.	Size	Ball Ø	Turns per Circuit	Load Rating $C_{dyn.}$	Load Rating $C_{stat.}$	Axial Clearance	Weight
	mm	mm		kN	kN	mm	kg
640 100 26	10x2	1,2	3	1,51	3,02	0,06	0,028
640 120 46	12x4	2,381	3	4	6,7	0,07	0,05
640 160 56	16x5	3,175	3	6,3	11,5	0,07	0,07
640 161 06	16x10	3,5	3	6,8	12,6	0,1	0,11
640 200 56	20x5	3,175	3	7,5	14,68	0,07	0,15
640 250 56	25x5	3,175	3	8	18,68	0,07	0,15
640 251 06	25x10	3,5	3	8,7	20,5	0,1	0,22
640 320 56	32x5	3,175	5	8,96	24,27	0,07	0,3
640 321 06	32x10	6,35	3	25,52	55,3	0,15	0,4
640 323 26	32x32	4,762	1,75x2	21,4	52,6	0,12	0,6
640 400 56	40x5	3,175	5	19	66,2	0,07	0,5
640 401 06	40x10	6,35	3	30,1	71	0,15	0,5
640 501 06	50x10	6,35	5	53,1	155	0,15	1,05
640 502 06	50x20	6,35	3	48	137	0,15	1,1
640 631 06	63x10	6,35	5	60,7	206	0,15	1,6

Mounting

The ball screw nuts will be delivered with a plastic tube inside. This tube is a transport protection against loosing the balls and is also a mounting aid. When the tube is hold against the spindle end, the nut can get screwed onto the spindle without loosing balls. Before use, the nut and the spindle have to be lubricated. For grease lubrication, normal roller bearing grease is recommended. The lubricant consumption depends on the condition of use.

Dimensions

Size mm	Version	D_1 mm	D_2 mm	G mm	L_1 mm	L_2 mm	L_3 mm	L_7 mm	L_{10} mm	BxT mm
10x2	R	19,5	M17x1	-	-	25	7	-	-	-
12x4	E	22	-	2,5	15	30	-	10	6	3x1,8
16x5	E	28	-	3	20	34	-	8,5	7	5x2
16x10	E	28	-	3	20	40	-	15	7	5x2
20x5	E	36	-	3	20	34	-	8,5	7	5x2
25x5	E	40	-	3	20	34	-	8,5	7	5x2
25x10	E	40	-	3	20	50	-	15	7,5	5x2
32x5	E	50	-	3	30	45	-	8,5	7	6x2,5
32x10	E	53	-	4	30	60	-	15	10	6x2,5
32x32	E	56	-	4	20	88	-	34	9,5	5x3
40x5	E	63	-	3	30	45	-	8,5	7	6x2,5
40x10	E	63	-	4	30	60	-	15	10	6x2,5
50x10	E	75	-	4	36	82	-	23	11	6x2,5
50x20	E	85	-	4	36	96	-	23	11	6x2,5
63x10	E	90	-	4	36	82	-	23	11	6x2,5



Chain Tensioners page 322

Miniature Ballscrew Drives (on request)

These ballscrew drives with hardened and ground spindle are made to the customer's specifications. They can be optionally equipped with single nut, long nut with screw-in thread or with flange nut. (all hardened). The drawing below only serves as an example and shows the smallest size of each type. The other drawings can be sent if required. The lengths L_1, L_2 and L_3 can be altered. Price and delivery times on request.

Necessary specifications for your request:
Size, lead, thread length L_1 (if requires also L_2 and L_3). Version of the nut, version low axial backlash or zero axial backlash, amount.

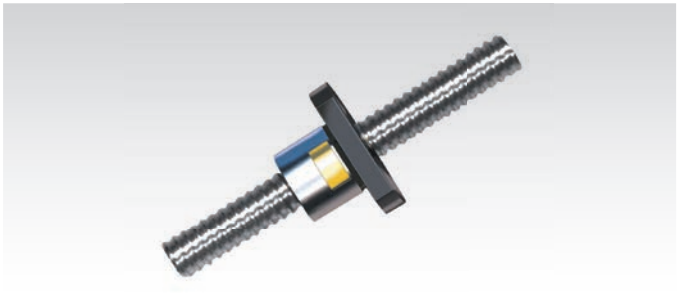

Technical Data for Miniature Ballscrew Drives

	Ø 6 mm*	Ø 8 mm*	Ø 8 mm*	Ø 10 mm*	Ø 12 mm*	Ø 12 mm**
Lead	1 mm	1 mm	2 mm	2 mm	1 mm	2 mm
Lead Angle	2°56′	2°13′	4°23′	3°32′	1°30′	2°58′
Lead Direction	Right Hand	Right Hand	Right Hand	Right Hand	Right Hand	Right Hand
Ball Diameter	0.8 mm	0.8 mm	1.6 mm	1.6 mm	0.8 mm	1.6 mm
Number of Ball Rotations	1x2	1x3	1x2	1x3	1x3	1x3
Dynamic Load Rating	600 N	700 N	900 N	1500 N	700 N	1700 N
Static Load Rating	900 N	1300 N	1500 N	2900 N	1300 N	3700 N
Axial Play****	0/0.010 max.	0/0.010 max.	0/0.010 max.	0/0.010 max.	0/0.010 max.	0/0.010 max.

	Ø 12 mm**	Ø 12 mm**	Ø 12 mm**	Ø 16 mm**	Ø 16 mm**	Ø 16 mm**
Lead	2.5 mm***	4 mm***	5 mm***	2 mm	2.5 mm***	4 mm***
Lead angle	3°40′	6°4′	7°33′	2°13′	2°51′	4°33′
Lead Direction	Right Hand	Right Hand	Right Hand	Right Hand	Right Hand	Right Hand
Ball Diameter	1.6 mm	2.5 mm	2.5 mm	1.6 mm	1.6 mm	2.5 mm
Number of Ball Rotations	1x3	1x3	1x3	1x3	1x3	1x3
Dynamic Load Rating	1700 N	2400 N	2400 N	2700 N	2700 N	7000 N
Static Load Rating	3700 N	4300 N	4300 N	6450 N	6450 N	8500 N
Axial Play****	0/0.010 max.	0/0.020 max.	0/0.020 max.	0/0.010 max.	0/0.010 max.	0/0.020 max.

* Ball nuts without wiper.
** Ball nuts with wiper made from plastic PA6.
*** For this lead we can only supply single nuts or flange nuts (no screw-in thread available).
**** When ordering please state whether low backlash or zero backlash is required.

Miniature Ballscrew Drives, Standard Versions of Nuts

Materials:
Spindle: Cf53, induction hardened.
Nut: 100Cr6, hardened.
Other models available on request.

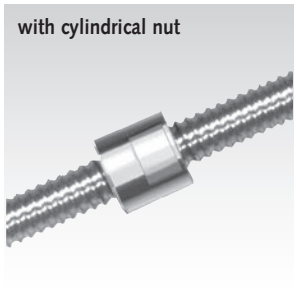



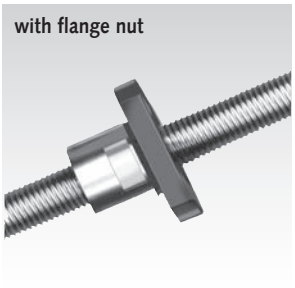

Example Drawing showing size Ø 6 with with cylindrical, single nut.

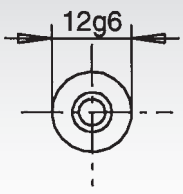

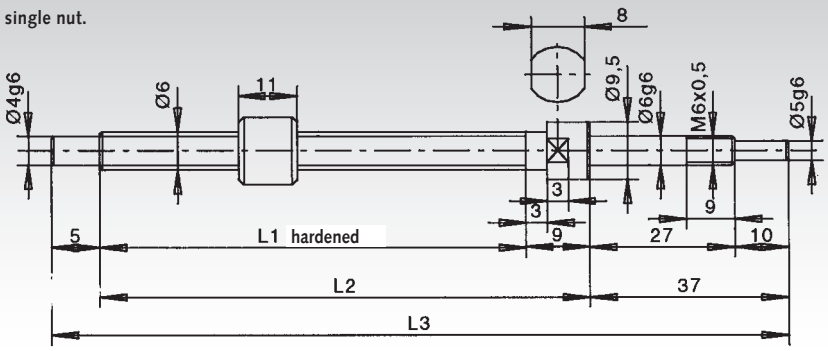

Pillow Block Bearing Units BK, for Fixed Side

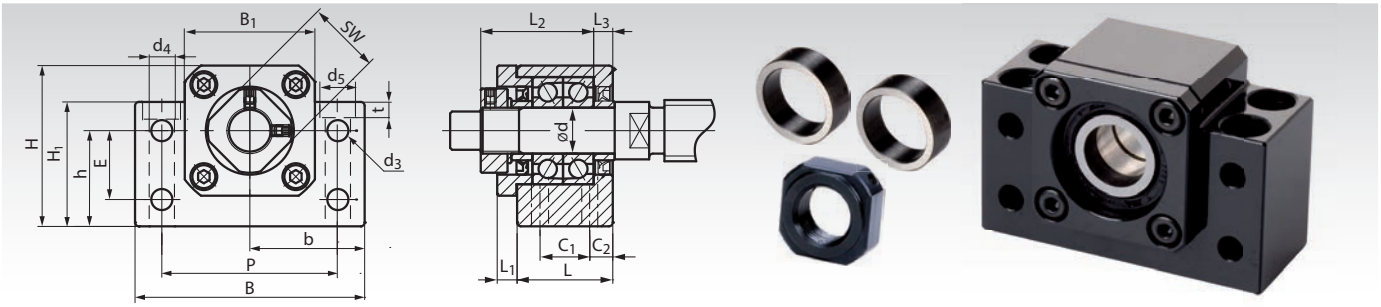

Material: Housing from steel, all surfaces machined, burnished. On request: nickel plated. Rolling bearing from bearing steel.

Ready-to-install housing bearing unit for trapezoidal and ballscrew spindle drives, for the fixed side. With two angular contact ball bearings, lightly preloaded, with seals. With 8 mounting holes.

Locknut and distance bushes are included. Due to the standard dimensions, these units can also replace parts of other suppliers.

Spindle reworking on request (see page 325).
Matching counterpart for support side: Pillow Block Bearing BF.

Ordering Details: e.g.: Product No. 642 001 10, Ball Pillow Block Bearing Unit BK 10, Bore 10mm

Product No.	Type	d mm	L mm	L_1 mm	L_2 mm	L_3 mm	B mm	H mm	$b^{\pm0,02}$ mm	$h^{\pm0,02}$ mm	B_1 mm	H_1 mm	E mm	P mm	C_1 mm	C_2 mm	d_3 mm	d_4 mm	d_5 mm	t mm	SW mm	Weight kg
642 001 10	BK 10	10	25	5	29,5	5	60	39	30	22	34	32,5	15	46	13	6	5,5	6,3	10,5	6,5	16	0,39
642 001 12	BK 12	12	25	5	29,5	5	60	42	30	25	34	32,5	18	46	13	6	5,5	6,3	10,5	1,5	19	0,41
642 001 15	BK 15	15	27	6	32	6	70	47	35	28	38	38	18	54	15	6	5,5	6,3	10,5	6,5	22	0,57
642 001 17	BK 17	17	35	9	44	7	86	63	43	39	48	55	28	68	19	8	6,6	8,7	14,0	8,6	24	1,27
642 001 20	BK 20	20	35	8	43	8	88	59	44	34	50	50	22	70	19	8	6,6	8,7	14,0	8,5	30	1,19
642 001 25	BK 25	25	42	12	54	9	106	79	53	48	62	70	33	85	22	10	9	10,7	17,5	10,8	35	2,30
642 001 30	BK 30	30	45	14	61	9	128	88	64	51	74	78	33	102	23	11	11	13,7	20	13	40	3,32
642 001 35	BK 35	35	50	14	67	12	140	95	70	52	86	79	35	114	26	12	11	13,7	20	13	50	4,33
642 001 40	BK 40	40	61	18	76	15	160	109	80	60	98	90	37	130	33	14	14	17,7	26	17,5	50	6,50

Pillow Block Bearing Units BF, for Support Side

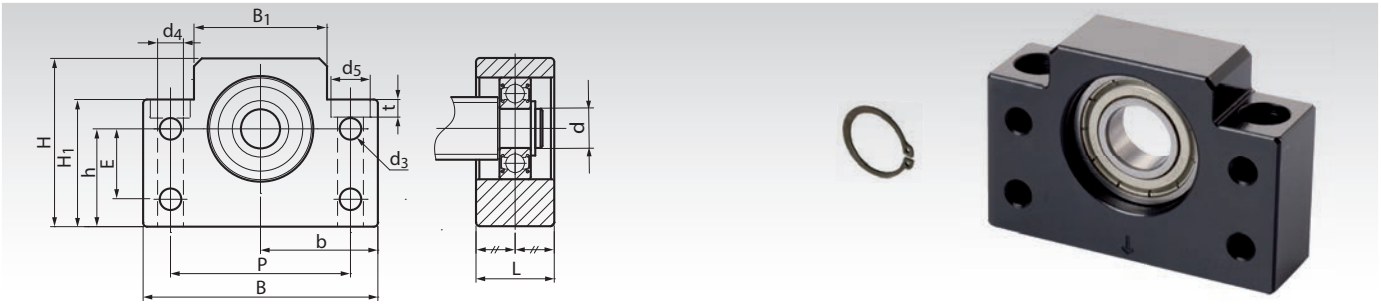

Material: Housing from steel, all surfaces machined, burnished. On request: nickel plated. Rolling bearing from bearing steel.

Ready-to-install housing bearing unit for trapezoidal and ballscrew spindle drives, for the support side. With one movable single row deep groove ball bearing with shields (2Z). With 6 mounting holes.

Retaining ring for fixing on the spindle end is included. Due to the standard dimensions, these units can also replace parts of other suppliers.

Spindle reworking on request (see page 325).
Matching counterpart for fixed side: Pillow Block Bearing BK.

Ordering Details: e.g.: Product No. 642 002 10, Ball Pillow Block Bearing Unit BF 10, Bore 8mm

Product No.	Type	d mm	L mm	B mm	H mm	$b^{\pm0,02}$ mm	$h^{\pm0,02}$ mm	B_1 mm	H_1 mm	E mm	P mm	d_3 mm	d_4 mm	d_5 mm	t mm	Weight kg
642 002 10	BF 10	8	20	60	39	30	22	34	32,5	15	46	5,5	6,3	10,8	5,0	0,29
642 002 12	BF 12	10	20	60	43	30	25	34	32,5	18	46	5,5	6,3	10,8	1,5	0,30
642 002 15	BF 15	15	20	70	48	35	28	40	38	18	54	5,5	6,3	11	6,5	0,38
642 002 17	BF 17	17	23	86	64	43	39	50	55	28	68	6,6	8,7	14	8,6	0,74
642 002 20	BF 20	20	26	88	60	44	34	52	50	22	70	6,6	8,7	14	8,6	0,76
642 002 25	BF 25	25	30	106	80	53	48	64	70	33	85	9	10,7	17,5	11	1,42
642 002 30	BF 30	30	32	128	89	64	51	76	78	33	102	11	13,7	20	13	1,97
642 002 35	BF 35	35	32	140	96	70	52	88	79	35	114	11	13,7	20	13	2,22
642 002 40	BF 40	40	37	160	110	80	60	100	90	37	130	14	17,7	26	17,5	3,27



Nickel plated on request.

Pillow Block Bearing Units EK, for Fixed Side

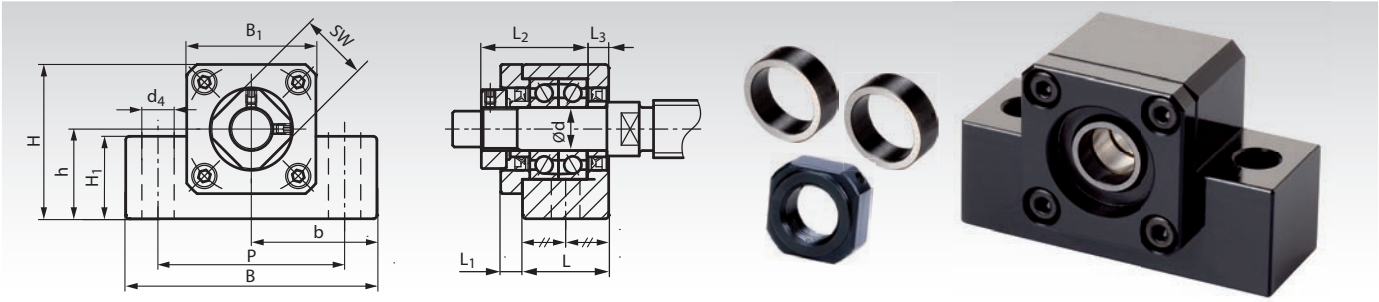

Material: Housing from steel, all surfaces machined, burnished. On request: nickel plated. Rolling bearing from bearing steel.

Ready-to-install housing bearing unit for trapezoidal and ballscrew spindle drives, for the fixed side. With two angular contact ball bearings, lightly preloaded, with seals. With 2 mounting holes.

Locknut and distance bushes are included. Due to the standard dimensions, these units can also replace parts of other suppliers.

Spindle reworking on request (see page 325).
Matching counterpart for support side: Pillow Block Bearing EF.

Ordering Details: e.g.: Product No. 642 003 06, Ball Pillow Block Bearing Unit EK 6, Bore 6mm

Product No.	Type	d mm	L mm	L_1 mm	L_2 mm	L_3 mm	B mm	H mm	$b^{\pm 0,02}$ mm	$h^{\pm 0,02}$ mm	B_1 mm	H_1 mm	P mm	d_4 mm	SW mm	Weight kg
642 003 06	EK 06	6	20	5,5	22	3,5	42	25	21	13	20	12	30	5,2	12	0,14
642 003 08	EK 08	8	23	7	26	4	52	32	26	17	27	16	38	6,3	14	0,24
642 003 10	EK 10	10	24	6	29,5	6	70	43	35	25	36	24	52	9	16	0,46
642 003 12	EK 12	12	24	6	29,5	6	70	43	35	25	36	24	52	9	19	0,44
642 003 15	EK 15	15	25	6	32	5	80	50	40	30	40	25	60	11	22	0,55
642 003 20	EK 20	20	42	10	50	10	95	58	47,5	30	56	25	75	11	30	1,35

Pillow Block Bearing Units EF, for Support Side

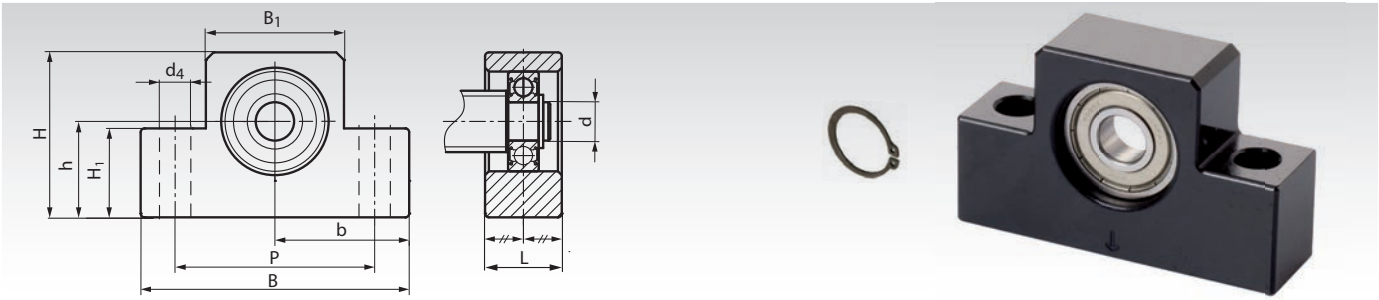

Material: Housing from steel, all surfaces machined, burnished. On request: nickel plated. Rolling bearing from bearing steel.

Ready-to-install housing bearing unit for trapezoidal and ballscrew spindle drives, for the support side. With one movable single row deep groove ball bearing with shields (2Z). With 2 mounting holes.

Retaining ring for fixing on the spindle end is included. Due to the standard dimensions, these units can also replace parts of other suppliers.

Spindle reworking on request (see page 325).
Matching counterpart for fixed side: Pillow Block Bearing EK.

Ordering Details: e.g.: Product No. 642 004 06, Ball Pillow Block Bearing Unit EF 6, Bore 6mm

Product No.	Type	d mm	L mm	B mm	H mm	$b^{\pm 0,02}$ mm	$h^{\pm 0,02}$ mm	B_1 mm	H_1 mm	P mm	d_4 mm	Weight kg
642 004 06	EF 06	6	12	42	25	21	13	20	12	30	5,2	0,07
642 004 08	EF 08	6	14	52	32	26	17	27	16	38	6,3	0,13
642 004 10	EF 10	8	20	70	43	35	25	36	24	52	9	0,33
642 004 12	EF 12	10	20	70	43	35	25	36	24	52	9	0,32
642 004 15	EF 15	15	20	80	49	40	30	41	25	60	9	0,38
642 004 20	EF 20	20	26	95	58	47,5	30	56	25	75	11	0,63



Nickel plated on request.

Flange Bearing Units FK, for Fixed Side

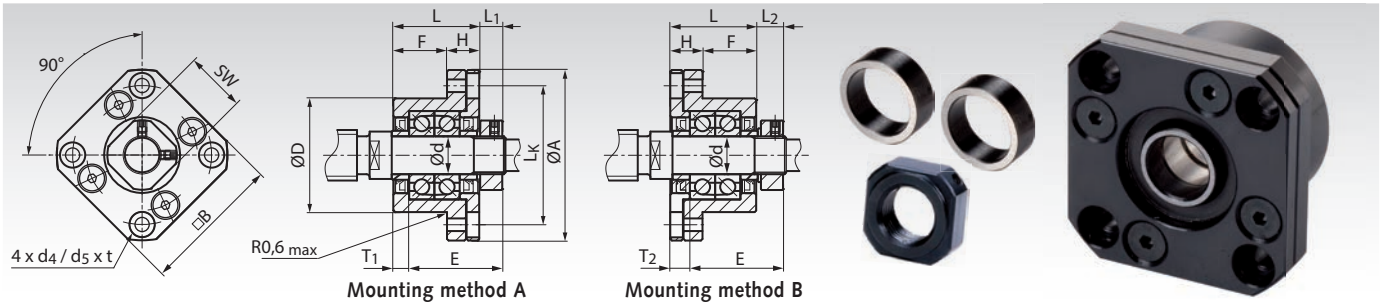

Material: Housing from steel, all surfaces machined, burnished. On request: nickel plated. Rolling bearing from bearing steel.

Ready-to-install housing bearing unit for trapezoidal and ballscrew spindle drives, for the fixed side. With two angular contact ball bearings, lightly preloaded, with seals. With 4 mounting holes.

Locknut and distance bushes are included. Due to the standard dimensions, these units can also replace parts of other suppliers.

Spindle reworking on request (see page 325).
Matching counterpart for support side: Flange Bearing FF.

Ordering Details: e.g.: Product No. 642 005 06, Flange Bearing Unit FK 6, Bore 6mm

Product No.	Type	d mm	L mm	H mm	F mm	E mm	D^{g6} mm	A mm	L_k mm	B mm	L_1 mm	T_1 mm	L_2 mm	T_2 mm	d_4 mm	d_5 mm	t mm	SW mm	Weight kg
642 005 06	FK 06	6	20	7	13	22	22	36	28	28	5,5	3,5	6,5	4,5	3,4	6	3,3	12	0,08
642 005 08	FK 08	8	23	9	14	26	28	43	35	35	7,0	4	8	5	3,4	6	3,3	14	0,15
642 005 10	FK 10	10	27	10	17	29,5	34	52	42	42	7,3	5	8,5	6	4,5	8	4	16	0,21
642 005 12	FK 12	12	27	10	17	29,5	36	54	44	44	7,3	5	8,5	6	4,5	8	4	19	0,22
642 005 15	FK 15	15	32	15	17	36	40	63	50	52	9,8	6	12	8	5,5	9,5	6	22	0,39
642 005 17	FK 17	17	45	22	23	47	50	77	62	61	11,0	9	14	12	6,6	11	10	24	0,85
642 005 20	FK 20	20	52	22	30	50	57	85	70	68	7,8	10	12	14	6,5	11	10	30	1,09
642 005 25	FK 25	25	57	27	30	60	63	98	80	79	12,8	10	20	17	9	15	13	35	1,49
642 005 30	FK 30	30	62	30	32	61	75	117	95	93	10,8	12	17	18	11	17,5	15	40	2,32

Flange Bearing Units FF, for Support Side

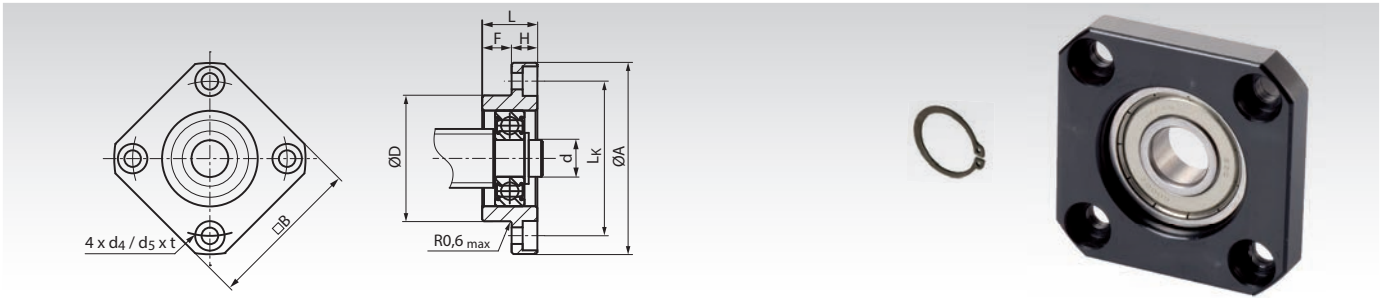

Material: Housing from steel, all surfaces machined, burnished. On request: nickel plated. Rolling bearing from bearing steel.

Ready-to-install housing bearing unit for trapezoidal and ballscrew spindle drives, for the support side. With one movable single row deep groove ball bearing with shields (2Z). With 4 mounting holes.

Retaining ring for fixing on the spindle end is included. Due to the standard dimensions, these units can also replace parts of other suppliers.

Spindle reworking on request (see page 325).
Matching counterpart for fixed side: Flange Bearing FK.

Ordering Details: e.g.: Product No. 642 006 06, Flange Bearing Unit FF 6, Bore 6mm

Product No.	Type	d mm	L mm	H mm	F mm	D^{g6} mm	A mm	L_k mm	B mm	d_4 mm	d_5 mm	t mm	Weight kg
642 006 06	FF 06	6	10	6	4	22	36	28	28	3,4	6,0	3,3	0,04
642 006 10	FF 10	8	12	7	5	28	43	35	35	3,4	6,0	3,3	0,07
642 006 12	FF 12	10	15	7	8	34	52	42	42	4,2	8	4,4	0,11
642 006 15	FF 15	15	17	9	8	40	63	50	52	5,2	9,5	5,4	0,20
642 006 17	FF 17	17	20	11	9	50	77	62	61	6,6	11	8,6	0,35
642 006 20	FF 20	20	20	11	9	57	85	70	68	6,3	11	6,5	0,27
642 006 25	FF 25	25	24	14	10	63	98	80	79	8,7	14	8,6	0,67
642 006 30	FF 30	30	27	18	9	75	117	95	93	10,7	17,5	10,8	1,07



Nickel plated on request.

Shaft Reworking and Bearing Load Data for Spindle Bearing Units BK, EK and FK (Fixed Side)

Shaft Reworking:
At ***MÄDLER®***, trapezoidal and ballscrew spindles can get reworked, fitting to the bearing units. The spindle reworking in the drawing is just a recommendation. Due to the customer´s request, the length L_5 could be shorter or longer and the shaft end could get a keyway DIN 6885.

Bearing Load Data:
The loading rates and speed limits shown in the table are the limits just for the bearings. The limits of the spindles are much lower, depending on the diameter, length and material.

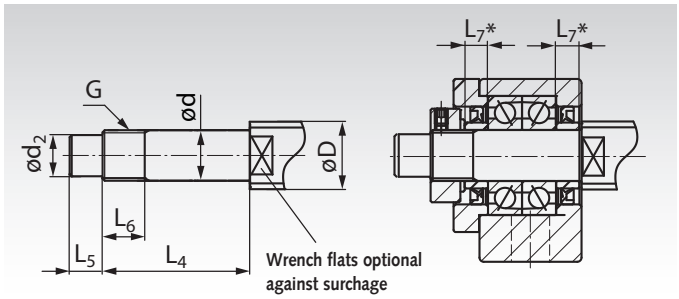

Recommendated Shaft Reworking for Fixed Side Units

Bearing-Unit Type	Spindle-Ø D KGT mm	TR mm	dg6 mm	d2h7 mm	L4±0,2 mm	L5±0,2 mm	G mm	L6±0,2 mm	L7 1) mm
EK 06 / FK 06	8	10*	6	4	28	8	M6x0,75	8	5
EK 08 / FK 08	10/12	12*/14	8	6	32	9	M8x1	10	5,5
BK 10	12/14/15	16	10	8	36	15	M10x1	16	5,5
EK 10 / FK 10	12/14/15	16	10	8	36	15	M10x1	11	5,5
BK 12	14/15/16	18	12	10	36	15	M12x1	14	5,5
EK 12 / FK 12	14/15/16	18	12	10	36	15	M12x1	11	5,5
BK 15	18/20	20*/24	15	12	40	20	M15x1	12	6
EK 15	18/20	20*/24	15	12	47	20	M15x1	13	10
FK 15	18/20	20*/24	15	12	47	20	M15x1	13	10
BK 17 / FK 17	20/25	24/28	17	15	53	23	M17x1	17	7
BK 20	25/28/30	30/36	20	17	53	25	M20x1	15	8
EK 20 / FK 20	25/28/30	30/36	20	17	62	25	M20x1	17	11
BK 25	30/32/36	36	25	20	65	30	M25x1,5	18	9
FK 25	30/32/36	36	25	20	76	30	M25x1,5	20	15
BK 30 / FK 30	36/40	36*/40	30	25	72	38	M30x1,5	25	9
BK 35	45	36*/40	35	30	81	45	M35x1,5	28	12
BK 40	50	50	40	35	93	50	M40x1,5	35	15

Bearing Load Data

Bearing Type	Load rating axial dyn.C kN	stat.C0 kN	Speed limit min-1
706 A P5	2,03	0,80	46.400
708 A P5	3,35	1,45	35.200
7000 A P5	5,0	2,34	29.440
7000 A P5	5,0	2,34	29.440
7001 A P5	5,4	2,71	25.760
7001 A P5	5,4	2,71	25.760
7002 A P5	3,2	2,36	22.080
7002 A P5	3,2	2,36	22.080
7002 A P5	3,2	2,36	22.080
7203 A P5	10,1	5,45	18.400
7004 A P5	10,3	6,10	16.560
7204 A P5	13,6	7,55	15.640
7205 A P5	15,4	9,45	13.800
7205 A P5	15,4	9,45	13.800
7206 A P5	21,3	13,6	11.040
7207 A P5	28,2	18,5	9.660
7208 A P5	33,5	23,3	8.832

1) The matching distance bushes are included in the scope of delivery of bearing units BK, EK and FK.
* A rest of the thread grooves may remain visible.

Shaft Reworking and Bearing Load Data for Spindle Bearing Units BF, EF and FF (Support Side)

Shaft Reworking:
At ***MÄDLER®***, trapezoidal and ballscrew spindles can get reworked, fitting to the bearing units. The spindle reworking in the drawing is just a recommendation. Due to the customer´s request, the length L_8 could be shorter or longer and the shaft end could get a keyway DIN 6885.

Bearing Load Data:
The loading rates and speed limits shown in the table are the limits just for the bearings. The limits of the spindles are much lower, depending on the diameter, length and material.

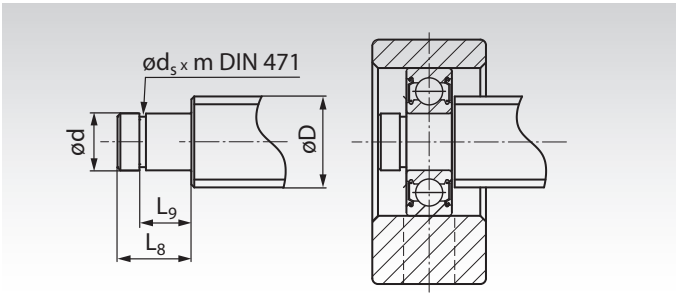

Recommendated Shaft Reworking for Support Side Units

Bearing-Unit Type	Spindle-Ø D KGT mm	TR mm	dg6 mm	ds-0,15 mm	L8±0,2 mm	L9±0,2 mm	mH13 mm	DIN 471 1) mm
EF 06 / FF 06	8	10*	6	5,7	9	6,8	0,8	6
EF 08	10/12	10*/12	6	5,7	9	6,8	0,8	6
BF 10 / EF 10 / FF 10	12/14/15	12*/14	8	7,6	10	7,9	0,9	8
BF 12 / EF 12 / FF 12	14/15/16	16/18	10	9,6	11	9,15	1,15	10
BF 15 / EF 15 / FF 15	18/20	20*/24	15	14,3	13	10,15	1,15	15
BF 17 / FF 17	20/25	24/28	17	16,2	16	13,15	1,15	17
BF 20	25/28/30	30/36	20	19,0	16	13,15	1,15	20
EF 20 / FF 20	25/28/30	30/36	20	19,0	19	15,35	1,35	20
BF 25 / FF 25	30/32/36	36	25	23,9	20	16,35	1,35	25
BF 30 / FF 30	36/40	36*/40	30	28,6	21	17,75	1,75	30
BF 35	40/45	36/40	35	33	22	18,75	1,75	35
BF 40	50	50	40	38	23	19,95	1,95	40

Bearing Load Data

Bearing Type	Load rating axial dyn.C kN	stat.C0 kN	Speed limit min-1
606-2Z	2,3	0,8	37.000
606-2Z	2,3	0,8	37.000
608-2Z	3,3	1,4	34.000
6000-2Z	4,6	2,0	31.000
6002-2Z	5,6	2,8	23.000
6203-2Z	9,6	4,8	17.000
6004-2Z	9,4	5,0	15.000
6204-2Z	12,8	6,7	14.000
6205-2Z	14,0	7,9	12.000
6206-2Z	19,5	11,3	9.500
6207-2Z	16,0	10,4	9.000
6208-2Z	29,5	18,0	8.000

1) The retaining ring DIN 471 is included in the scope of delivery of bearing units BF, EF and FF.
* A rest of the thread grooves may remain visible.

Come and visit our booth at a fair and get detailed information on our entire product range. Exact dates at: www.maedler.de



Splined Shafts and Splined Hubs DIN ISO 14 – Description

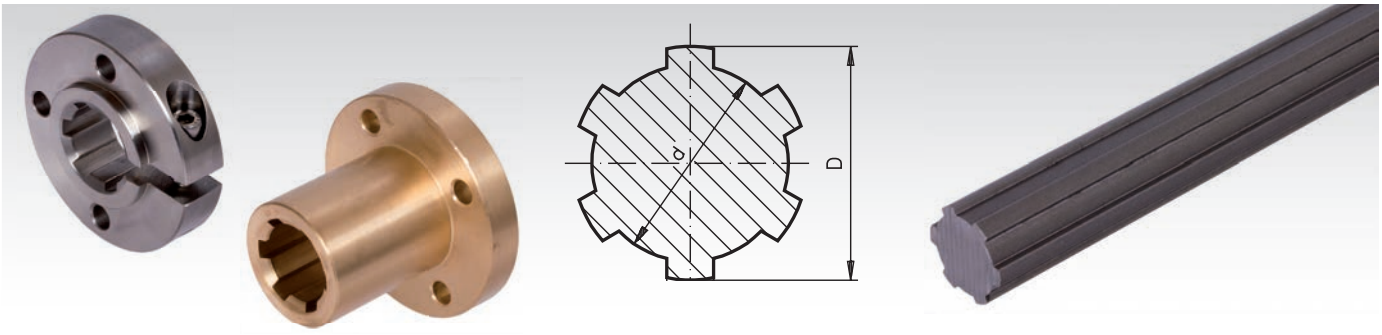

General Description
Splined shafts with splined hubs are used when torques have to be transmitted and the component to be driven needs to be movable in axial direction.

Common Profiles
DIN ISO 14 (used to be DIN 5463): Most common type, with straight, parallel flanks. This is the profile of catalogue goods. Other standards are less commonly used.

Profile Description DIN ISO 14:
Number of splines x small diameter x big diameter. Example for a component with 6 splines and outside diameter 14 mm: splined shaft (KW) or splined hub (KN) 6 x 11 x 14.

Production method:
Cold drawn: Economical production method. Due to the chipless shaping, the shafts have a unsevered grain structure and thus a high strength. This production method is perfectly suited for easy to shape materials as C45 or 1.4301.
Milled: for single-unit production, if special dimensional accuracy is required or for high strength materials. With this methods, shafts with diameters (steps) that are larger than the core diameter or outside diameter can be produced.

Splined Shafts in Catalogue Version, Page 328

Profiles
Main dimensions in accordance with DIN ISO 14. Shaft with splines with parallel, straight flanks. Up to size 28 x 34 with six splines, from size 32 x 38 with 8 splines.

Materials
The catalogue splined shafts are optionally available in steel C45 cold drawn or stainless steel 1.4301 cold drawn.

Tolerances
Straightness 0.8 mm/m, Torsion max. 0.5 mm/m.
A straightness of 0.1mm/m can be produced on request.

Lengths
Splined shafts up to a length of 6 metres can be supplied from stock. Standard lengths sold are 1 metre, 1.5 metre, 2 metre and 3 metre. Price for bigger lengths up to 6 metre on request.

Splined Hubs in in Catalogue Version, Page 328

Profile
Main dimensions in accordance with DIN 14. Hub with splines with parallel, straight flanks. Up to size 28 x 34 with six splines, from size 32 x 38 with 8 splines.

Materials
The catalogue splined hubs are optionally available in steel C45, red brass or stainless steel 1.4301.
Other materials as e.g. 42CrMo4 on request.

Tolerances
Profile inner diameter: H7. Profile outside diameter: H11.
Outer dimensions: according to DIN 2768m.

Lengths
The standard lengths are equivalent to the maximum possible sweeping length. Longer splined hubs are available on request. Provide for at least one centred (or one-sided) relieve groove.

Torque- and Performance Figures of Splined Shafts and Hubs based on the Torsional Stress (with Safety Margin of 2.5)

Material C45

Profile	11 x 14	13 x 16	16 x 20	18 x 22	21 x 25	23 x 28	26 x 32	28 x 34	32 x 38	36 x 42	42 x 48	46 x 54
Nm* fluctuating	38,1	59,5	103	141	215	293	373	455	655	906	1106	1455
Nm* alternating	33,3	52,0	90	124	189	257	326	398	573	793	973	1280
kW** fluctuating	6,0	9,3	16	22	34	46	59	72	103	142	174	230
kW** alternating	5,2	8,2	14	20	30	40	51	62	90	124	153	200

Material 1.4301

Profile	11 x 14	13 x 16	16 x 20	18 x 22	21 x 25	23 x 28	26 x 32	28 x 34	32 x 38	36 x 42	42 x 48	46 x 54
Nm* fluctuating	16,4	25,5	49	67	102	139	204	249	359	496	763	1005
Nm* alternating	14,4	22,5	43	59	90	122	180	220	316	437	672	885
kW** fluctuating	2,6	4,0	8	10	16	22	32	39	56	78	120	160
kW** alternating	2,3	3,5	7	9	14	19	28	34	50	69	106	140

* Transmittable torque in Nm.
** Transmittable power in kW at 1500 min^{-1}.

Splined Shafts - Similar to DIN ISO 14 Cold Drawn C45 and Stainless Steel, Material-No. 1.4301

Lengths in stock: 1000, 1500, 2000 and 3000 mm.
Special lengths up to 6000 mm on request (some in stock).

Tolerances:
Straightness 0.8 mm/m, torsion max. 0.5 mm/m.

A straightness of 0.1 mm/m can be produced on request.

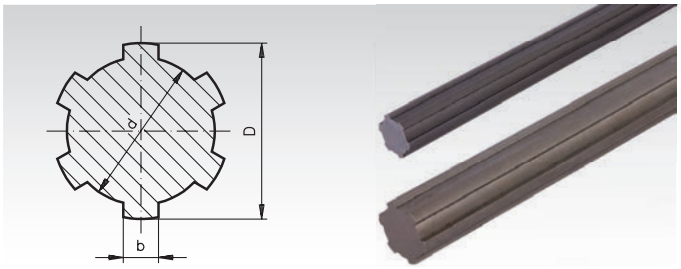

Ordering Details: e.g.: Product No. 648 402 00, Splined Shaft KW 11 x 14, 1000 mm long

Material C45

Product No. 1000 mm	Product No. 1500 mm	Product No. 2000 mm	Product No. 3000 mm	Profile Description mm	Number of splines	Ø D -0,07 -0,27 mm	Ø d -0,03 -0,08 mm	b +0 -0,08 mm	Weight kg/m
648 402 00	648 432 00	648 452 00	648 472 00	KW 11 x 14	6	14	11	3	0,949
648 404 00	648 434 00	648 454 00	648 474 00	KW 13 x 16	6	16	13	3,5	1,287
648 405 00	648 435 00	648 455 00	648 475 00	KW 16 x 20	6	20	16	4	1,911
648 401 00	648 431 00	648 451 00	648 471 00	KW 18 x 22	6	22	18	5	2,453
648 406 00	648 436 00	648 456 00	648 476 00	KW 21 x 25	6	25	21	5	3,139
648 403 00	648 433 00	648 453 00	648 473 00	KW 23 x 28	6	28	23	6	3,964
648 407 00	648 437 00	648 457 00	648 477 00	KW 26 x 32	6	32	26	6	5,008
648 409 00	648 439 00	648 459 00	648 479 00	KW 28 x 34	6	34	28	7	5,816
648 408 00	648 438 00	648 458 00	648 478 00	KW 32 x 38	8	38	32	6	7,433
648 412 00	648 442 00	648 462 00	648 482 00	KW 36 x 42	8	42	36	7	9,302
648 410 00	648 440 00	648 460 00	648 480 00	KW 42 x 48	8	48	42	8	12,371
648 414 00	648 444 00	648 464 00	648 484 00	KW 46 x 54	8	54	46	9	15,300

Material Stainless Steel

Product No. 1000 mm STAINLESS	Product No. 1500 mm STAINLESS	Product No. 2000 mm STAINLESS	Product No. 3000 mm STAINLESS	Profile Description mm	Number of splines	Ø D -0,07 -0,27 mm	Ø d -0,03 -0,08 mm	b +0 -0,08 mm	Weight kg/m
648 994 02	648 994 32	648 994 52	648 994 72	KW 11 x 14	6	14	11	3	0,949
648 994 04	648 994 34	648 994 54	648 994 74	KW 13 x 16	6	16	13	3,5	1,287
648 994 05	648 994 35	648 994 55	648 994 75	KW 16 x 20	6	20	16	4	1,911
648 994 01	648 994 31	648 994 51	648 994 71	KW 18 x 22	6	22	18	5	2,453
648 994 06	648 994 36	648 994 56	648 994 76	KW 21 x 25	6	25	21	5	3,139
648 994 03	648 994 33	648 994 53	648 994 73	KW 23 x 28	6	28	23	6	3,964
648 994 07	648 994 37	648 994 57	648 994 77	KW 26 x 32	6	32	26	6	5,008
648 994 09	648 994 39	648 994 59	648 994 79	KW 28 x 34	6	34	28	7	5,816
648 994 08	648 994 38	648 994 58	648 994 78	KW 32 x 38	8	38	32	6	7,433
648 994 12	648 994 42	648 994 62	648 994 82	KW 36 x 42	8	42	36	7	9,302
648 994 10	648 994 40	648 994 60	648 994 80	KW 42 x 48	8	48	42	8	12,371
648 994 14	648 994 44	648 994 64	648 994 84	KW 46 x 54	8	54	46	9	15,300

Splined Hubs - DIN ISO 14

Material: Steel C45Pb, from diameter 80 C45,
red brass (GC-CuSn7ZnPb).
Stainless steel, Material-No. 1.4305

STAINLESS

◎ A/d up to size 18 x 22 = 0.15 mm, above 0.2 mm.

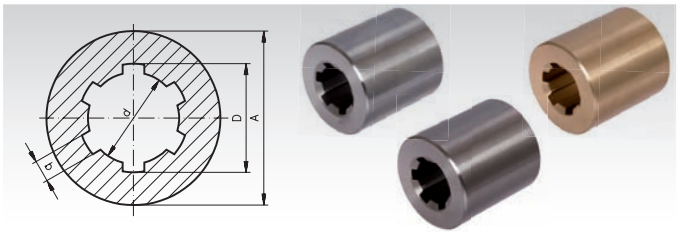

Ordering Details: e.g.: Product No. 648 302 00, Splined Hub DIN 14, KN 11 x 14

Product No. C45	Product No. Rg7	Product No. Stainless Steel	Profile Description mm	Number of keyways	Ø D^{H11} mm	Ø d^{H7} mm	b^{D9} mm	DIN ISO 2768 m Ø A mm	DIN ISO 2768 m Länge mm	Weight Steel kg	Weight Rg7 kg
648 302 00	648 352 00	648 993 02	KN 11 x 14	6	14	11	3	20	40	0,06	0,08
648 304 00	648 354 00	648 993 04	KN 13 x 16	6	16	13	3,5	28	45	0,16	0,18
648 305 00	648 355 00	648 993 05	KN 16 x 20	6	20	16	4	32	45	0,20	0,22
648 301 00	648 351 00	648 993 01	KN 18 x 22	6	22	18	5	40	50	0,27	0,3
648 306 00	648 356 00	648 993 06	KN 21 x 25	6	25	21	5	40	55	0,36	0,42
648 303 00	648 353 00	648 993 03	KN 23 x 28	6	28	23	6	50	55	0,47	0,54
648 307 00	648 357 00	648 993 07	KN 26 x 32	6	32	26	6	52	60	0,70	0,78
648 309 00	648 359 00	648 993 09	KN 28 x 34	6	34	28	7	60	60	0,76	0,87
648 308 00	648 358 00	648 993 08	KN 32 x 38	8	38	32	6	60	60	0,88	1,00
648 312 00	648 362 00	648 993 12	KN 36 x 42	8	42	36	7	70	65	1,08	1,23
648 310 00	648 360 00	648 993 10	KN 42 x 48	8	48	42	8	65	70	0,94	1,10
648 311 00	648 361 00	648 993 11	KN 42 x 48	8	48	42	8	80	70	1,88	2,16
648 314 00	648 364 00	648 993 14	KN 46 x 54	8	54	46	9	80	90	2,25	2,49

Splined Hubs with Flange - DIN ISO 14

Material: Steel C45Pb, from diameter 70 C45.
Red brass Rg7 (GC-CuSn7ZnPb).
Stainless steel, Material-No. 1.4305.

STAINLESS

◎ F/d and C/d = 0.05 mm.

Ready-to-install, with 4 mounting holes.

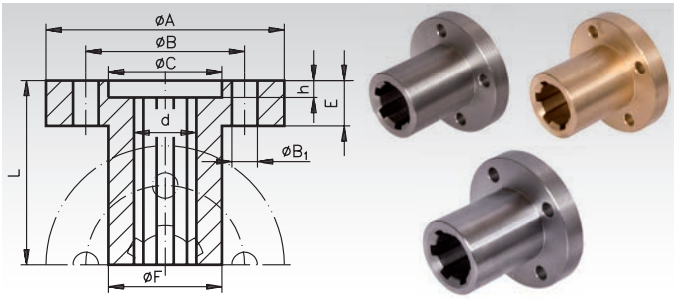

Ordering Details: e.g.: Product No. 648 502 00, Hub DIN 14 KN 11 x 14 with Flange

Product No. C45	Product No. Rg7	Product No. Stainless Steel	Profile Description	DIN ISO 2768 m Ø A	Ø B	DIN74m Ø B_1	Ø C^{H7}	Ø F^{h8}	Ø d^{H7}	DIN ISO 2768 m E	h	L	Weight Steel	Weight Rg7
			mm	mm	mm	mm	mm	mm	mm	mm	mm	mm	kg	kg
648 502 00	648 552 00	648 995 02	KN 11 x 14	42	28	4,5	20	20	11	8	3	35	0,10	0,12
648 504 00	648 554 00	648 995 04	KN 13 x 16	50	36	4,5	22	25	13	8	3	40	0,18	0,22
648 505 00	648 555 00	648 995 05	KN 16 x 20	52	38	5,5	25	28	16	10	3	40	0,22	0,26
648 501 00	648 551 00	648 995 01	KN 18 x 22	54	40	5,5	30	30	18	10	3,5	45	0,26	0,30
648 506 00	648 556 00	648 995 06	KN 21 x 25	62	48	6,6	35	34	21	10	3,5	50	0,34	0,38
648 503 00	648 553 00	648 995 03	KN 23 x 28	64	50	6,6	36	36	23	10	3,5	55	0,41	0,47
648 507 00	648 557 00	648 995 07	KN 26 x 32	70	56	6,6	40	42	26	10	3,5	60	0,50	0,58
648 509 00	648 559 00	648 995 09	KN 28 x 34	78	60	9,0	46	45	28	12	3,5	60	0,64	0,74
648 508 00	648 558 00	648 995 08	KN 32 x 38	82	65	9,0	50	50	32	12	3,5	60	0,72	0,84
648 512 00	648 562 00	648 995 12	KN 36 x 42	90	70	9,0	52	52	36	16	4	80	0,94	1,07
648 510 00	648 560 00	648 995 10	KN 42 x 48	95	75	11,0	60	60	42	16	4	80	1,22	1,38
648 514 00	648 564 00	648 995 14	KN 46 x 54	100	80	11,0	65	65	46	16	4	100	1,50	1,70

Clamp Collars for Splined Hubs - DIN ISO 14

Material: Steel C45Pb, from Ø 70 C45.
Red brass (GC-CuSn7ZnPb).
Stainless steel, Material-No. 1.4305.

STAINLESS

◎ C/d = 0.05 mm.

Ready-to-install, with 4 mounting holes,
match with spline hubs with flange.

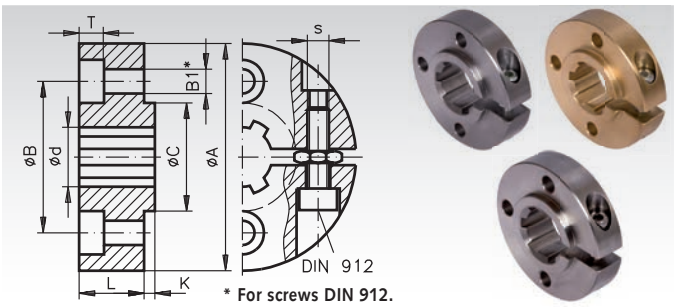

Ordering Details: e.g.: Product No. 648 602 00, Clamp Collar DIN 14 KN 11 x 14

* For screws DIN 912.

Product No. C45	Product No. Rg7	Product No. Stainless Steel	Profile Description	DIN ISO 2768 m Ø A	Ø B	DIN74m Ø B_1	1) Ø C^{h8}*	1) Ø d^{H7}*	L	DIN ISO 2768 m K	T	S	Weight Steel	Weight Rg7
			mm	mm	mm	mm	mm	mm	mm	mm	mm	mm	kg	kg
648 602 00	648 652 00	648 996 02	KN 11 x 14	42	28	4,5	20	11	12	2	4,6	M4	0,10	0,12
648 604 00	648 654 00	648 996 04	KN 13 x 16	50	36	4,5	22	13	12	2	4,6	M4	0,16	0,18
648 605 00	648 655 00	648 996 05	KN 16 x 20	52	38	5,5	25	16	14	2	5,7	M5	0,18	0,20
648 601 00	648 651 00	648 996 01	KN 18 x 22	54	40	5,5	30	18	14	3	5,7	M5	0,20	0,23
648 606 00	648 656 00	648 996 06	KN 21 x 25	62	48	6,6	35	21	14	3	6,8	M5	0,24	0,28
648 603 00	648 653 00	648 996 03	KN 23 x 28	64	50	6,6	36	23	15	3	6,8	M6	0,26	0,30
648 607 00	648 657 00	648 996 07	KN 26 x 32	70	56	6,6	40	26	15	3	6,8	M6	0,34	0,40
648 609 00	648 659 00	648 996 09	KN 28 x 34	78	60	9,0	46	28	18	3	9,0	M8	0,47	0,54
648 608 00	648 658 00	648 996 08	KN 32 x 38	82	65	9,0	50	32	18	3	9,0	M8	0,52	0,62
648 612 00	648 662 00	648 996 12	KN 36 x 42	90	70	9,0	52	36	18	3	9,0	M8	0,62	0,72
648 610 00	648 660 00	648 996 10	KN 42 x 48	95	75	11,0	60	42	22	3	11,0	M8	0,82	0,94
648 614 00	648 664 00	648 996 14	KN 46 x 54	100	80	11,0	65	46	24	3	11,0	M8	0,96	1,08

1) Manufacturing tolerance before making the clamp slot.

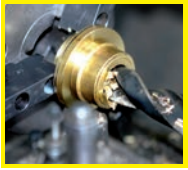

Reworking within 24h-service possible. Custom made parts on request.

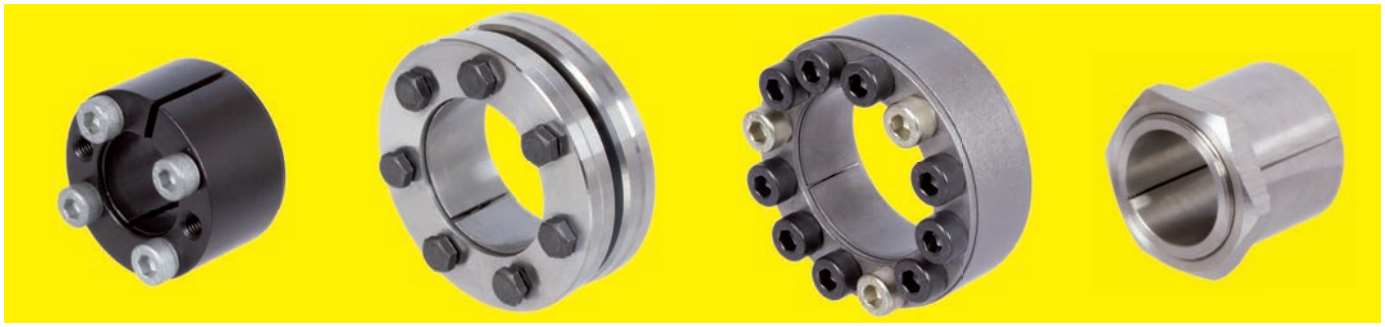

Selection Tool on the Internet at **www.maedler.de** in the section **MÄDLER®-Tools**

	Type	Smallest Product inner Ø and torque		Biggest Product inner Ø and torque		Assembly-time	Self-centering	Material	Page
	**BAR**	Ø 5mm	6Nm	Ø 100mm	11.790Nm	medium	yes	Steel	332
	**BAR QPQ**	Ø 5mm	6Nm	Ø 50mm	1900Nm	medium	yes	Steel QPQ	333
	**BAR** STAINLESS	Ø 6mm	3Nm	Ø 40mm	400Nm	medium	yes	Stainless Steel	334
	**COM-A**	Ø 19mm	270Nm	Ø 100mm	9.560Nm	long	no	Steel	335
	**COM-A** STAINLESS	Ø 20mm	110Nm	Ø 50mm	700Nm	long	no	Stainless Steel	336
	**COM-AS**	Ø 19mm	320Nm	Ø 100mm	11.300Nm	long	no	Steel	337
	**COM-B**	Ø 6mm	12Nm	Ø 100mm	14.300Nm	long	yes	Steel	338
	**COM-B** STAINLESS	Ø 10mm	22Nm	Ø 50mm	910Nm	long	yes	Stainless Steel	339
	**COM-C**	Ø 19mm	294Nm	Ø 100mm	9.400Nm	long	yes	Steel	340
	**COM-CB1**	Ø 18mm	310Nm	Ø 100mm	13.100Nm	long	yes	Steel	341
	**COM-CB2**	Ø 18mm	270Nm	Ø 100mm	9.800Nm	long	yes	Steel	342
	**COM-CB3**	Ø 14mm	120Nm	Ø 50mm	1.800Nm	long	yes	Steel	343
	**COM-D**	Ø 19mm	353Nm	Ø 100mm	15.000Nm	long	yes	Steel	344
	**COM-L**	Ø 25mm	810Nm	Ø 100mm	27.900Nm	long	yes	Steel	345

	Type	Smallest Product inner Ø and torque		Biggest Product inner Ø and torque		Assembly-time	Self-centering	Material	Page
	**COM-LL**	Ø 25mm	900Nm	Ø 100mm	32900Nm	long	yes	Steel	346
	**COM-LLH**	Ø 42mm	3290Nm	Ø 120mm	38400Nm	long	yes	Steel	347
	**COM-R**	Ø 6mm	2Nm	Ø 120mm	6170Nm	long	no	Steel	348
	**E**	Ø 15mm	46Nm	Ø 50mm	1900Nm	short	yes	Steel	349
	**E-N** STAINLESS	Ø 15mm	46Nm	Ø 50mm	1900Nm	short	yes	Stainless Steel	349
	**MSA**	Ø 19mm	170Nm	Ø 50mm	1625Nm	short	yes	Steel	350
	**MSD**	Ø 15mm	55Nm	Ø 50mm	1900Nm	short	yes	Steel	351
	**MSD-N** STAINLESS	Ø 15mm	45Nm	Ø 50mm	1550Nm	short	yes	Stainless Steel	352
	**MSM**	Ø 6mm	5Nm	Ø 14mm	48Nm	short	yes	Steel	352
	**MSM-N** STAINLESS	Ø 6mm	5Nm	Ø 14mm	48Nm	short	yes	Stainless Steel	352
	**SIG** STAINLESS	Ø 4mm	3Nm	Ø 40mm	105Nm	short	yes	Stainless Steel	353
	**SSG**	Ø 14mm	61Nm	Ø 60mm	1290Nm	short	yes	Steel	354
	**TT 5-16**	Ø 5mm	9Nm	Ø 16mm	149Nm	short	yes	Steel	355
	**TT 17-35**	Ø 17mm	174Nm	Ø 35mm	681Nm	short	yes	Steel	355
	**ST**	Ø 10mm	39Nm	Ø 65mm	3940Nm	long	non	Steel	356
	**ST-B**	Ø 11mm	30Nm	Ø 75mm	6000Nm	long	no	Steel	357
	**ST-R** STAINLESS	Ø 10mm	22Nm	Ø 60mm	1450Nm	long	no	Stainless Steel	358
	**ST-K**	Ø 15mm	125Nm	Ø 100mm	5590Nm	medium	no	Steel	359
	**Taper**	Ø 9mm	60Nm	Ø 125mm	14240Nm	short	yes	Grey Cast Iron	360

Locking Assemblies BAR

Material: Steel.

- For fixing a hub (e.g. drive wheel, rotor or similar) on a shaft.
- For medium torques.
- Very good distribution of pressure.
- Very good self-centering.
- Self-releasing at dismounting.
- Also suitable for large hub and shaft tolerances.
- Slight axial offset possible during assembly.

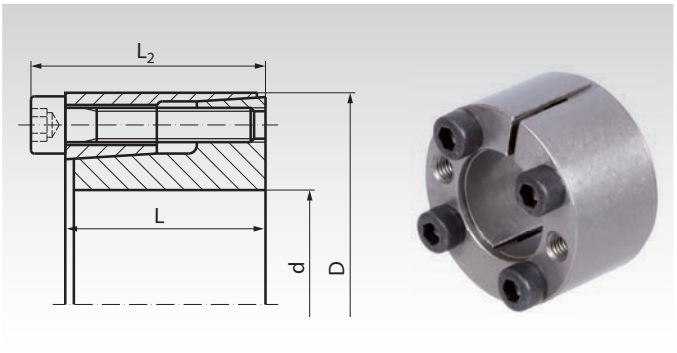

Ordering Details: e.g.: Product No. 615 405 00, Locking Assembly BAR 5 mm

Product No.	d	D	L	L_2	at T_A transmittable T	F_{ax}	Surface Pressure at Shaft P_W	at Hub P_N	Tensioning Screw DIN 912-12.9 Size	Fastening Torque T_A	Amount	Weight
	mm	mm	mm	mm	Nm	kN	N/mm²	N/mm²		Nm		kg
615 405 00	5	16	11	13,5	6	2	150	55	M2,5 x 10	1,2	3	0,012
615 406 00	6	16	11	13,5	9	3	188	69	M2,5 x 10	1,2	3	0,012
615 406 35	6,35	16	11	13,5	10	3	180	72	M2,5 x 10	1,2	3	0,012
615 407 00	7	17	11	13,5	11	3	155	64	M2,5 x 10	1,2	3	0,013
615 408 00	8	18	11	13,5	12	3	141	62	M2,5 x 10	1,2	3	0,015
615 409 00	9	20	13	15,5	17	4	132	60	M2,5 x 12	1,2	4	0,020
615 409 53	9,53	20	13	15,5	18	4	124	59	M2,5 x 12	1,2	4	0,020
615 410 00	10	20	13	15,5	19	4	120	60	M2,5 x 12	1,2	4	0,019
615 411 00	11	22	13	15,5	21	4	108	54	M2,5 x 12	1,2	4	0,024
615 412 00	12	22	13	15,5	24	4	102	55	M2,5 x 12	1,2	4	0,022
615 412 70	12,7	23	13	15,5	24	4	102	55	M2,5 x 12	1,2	4	0,020
615 414 00	14	26	17	20	40	6	94	50	M3 x 16	2,1	4	0,039
615 415 00	15	28	17	20	44	6	93	50	M3 x 16	2,1	4	0,044
615 416 00	16	32	17	21	86	10	158	79	M4 x 16	4,9	4	0,067
615 417 00	17	35	21	25	88	10	116	56	M4 x 20	4,9	4	0,090
615 418 00	18	35	21	25	94	11	110	57	M4 x 20	4,9	4	0,087
615 419 00	19	35	21	25	99	11	104	56	M4 x 20	4,9	4	0,083
615 420 00	20	38	21	26	179	17	169	89	M5 x 20	10	4	0,100
615 422 00	22	40	21	26	187	18	146	80	M5 x 20	10	4	0,110
615 424 00	24	47	26	32	290	24	155	79	M6 x 25	17	4	0,200
615 425 00	25	47	26	32	300	24	147	78	M6 x 25	17	4	0,190
615 425 40	25,4	47	26	32	310	24	145	79	M6 x 25	17	4	0,180
615 428 00	28	50	26	32	480	34	186	105	M6 x 25	17	6	0,220
615 430 00	30	55	26	32	510	34	174	95	M6 x 25	17	6	0,270
615 432 00	32	55	26	32	600	38	181	105	M6 x 25	17	6	0,250
615 435 00	35	60	31	37	820	47	172	100	M6 x 30	17	8	0,360
615 438 00	38	65	31	37	880	47	157	92	M6 x 30	17	8	0,430
615 440 00	40	65	31	37	1000	50	171	99	M6 x 30	17	8	0,400
615 442 00	42	75	36	44	1410	67	177	99	M8 x 35	40	6	0,670
615 445 00	45	75	36	44	1510	67	165	99	M8 x 35	40	6	0,630
615 448 00	48	80	36	44	2150	86	206	123	M8 x 35	40	8	0,740
615 450 00	50	80	36	44	2150	89	190	118	M8 x 35	40	8	0,700
615 455 00	55	85	42	52	2772	110	270	174	M8 x 40	40	8	0,770
615 460 00	60	90	42	52	3060	120	248	166	M8 x 40	40	8	0,820
615 465 00	65	95	42	52	3645	120	253	174	M8 x 40	40	9	0,880
615 470 00	70	110	48	58	5724	180	283	182	M10 x 45	80	8	1,590
615 475 00	75	115	48	58	6210	180	268	129	M10 x 45	80	8	1,670
615 480 00	80	120	54	65	6660	190	260	130	M10 x 50	80	8	1,760
615 485 00	85	125	54	65	7560	190	273	123	M10 x 50	80	9	1,850
615 490 00	90	130	58	70	8100	200	233	121	M10 x 55	80	9	1,940
615 495 00	95	135	58	70	9900	230	271	140	M10 x 55	80	10	2,020
615 500 00	100	145	58	70	11790	260	265	186	M12 x 55	145	8	2,900

T = transmittable torque at F_{ax} = 0.
F_{ax} = transmittable axial force at T = 0.
P_W = surface pressure onto the shaft.
P_N = surface pressure onto the hub.
T_A = fastening torque of the screws.

Hub Calculation and Selection Tool

on the Internet at **www.maedler.de**

in the section **MÄDLER®-Tools**

Fit, Surface

Shaft and hub up to tolerance h8/H8.
Surface finish for shaft and hub < 12.5µm.

Mounting

The locking assembly has to sit inside the bore by at least the measure „L“. Slightly oil the locking assembly before mounting, do not use molybdenum disulphide or fat. Tighten the screws evenly and crosswise in several steps.

Demounting

Remove all tensioning screws and screw them into the (usually unused) forcing thread of the front ring, until the ring is released.

Locking Assemblies BAR, QPQ-Coated

Material: Steel.

- For fixing a hub on a shaft.
- **QPQ coated:** High corrosion resistance, improved fatigue strength, primarily food safe (further information see below).
- For medium torques.
- Self-centering.
- Slight axial offset possible during assembly.

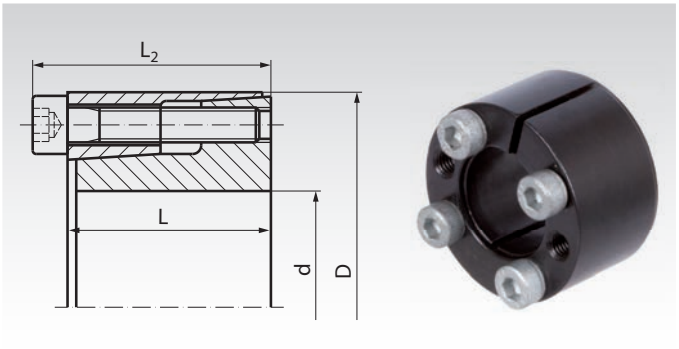

Ordering Details: e.g.: Product No. 615 705 00, Locking Assembly BAR QPQ, 5 mm Bore

Product No.	d	D	L	L_2	at T_A transmittable T	F_{ax}	Surface Pressure at Shaft P_W	at Hub P_N	Tensioning Screw DIN 912-12.9 Size	Fastening Torque T_A Nm	Amount	Weight kg
	mm	mm	mm	mm	Nm	kN	N/mm²	N/mm²				
615 705 00	5	16	11	13,5	6	2	150	55	M2,5 x 10	1,2	3	0,012
615 706 00	6	16	11	13,5	9	3	184	69	M2,5 x 10	1,2	3	0,012
615 706 35	6,35	16	11	13,5	10	3	180	72	M2,5 x 10	1,2	3	0,012
615 708 00	8	18	11	13,5	12	3	141	62	M2,5 x 10	1,2	3	0,015
615 709 00	9	20	13	15,5	17	4	132	60	M2,5 x 12	1,2	4	0,020
615 710 00	10	20	13	15,5	19	4	120	60	M2,5 x 12	1,2	4	0,019
615 711 00	11	22	13	15,5	21	4	108	54	M2,5 x 12	1,2	4	0,024
615 712 00	12	22	13	15,5	24	4	102	55	M2,5 x 12	1,2	4	0,022
615 714 00	14	26	17	20	40	6	94	50	M3 x 16	2,1	4	0,039
615 715 00	15	28	17	20	44	6	93	50	M3 x 16	2,1	4	0,044
615 716 00	16	32	17	21	86	10	158	79	M4 x 16	4,9	4	0,067
615 717 00	17	35	21	25	88	10	116	56	M4 x 20	4,9	4	0,090
615 718 00	18	35	21	25	94	11	110	57	M4 x 20	4,9	4	0,087
615 719 00	19	35	21	25	99	11	104	56	M4 x 20	4,9	4	0,080
615 720 00	20	38	21	26	179	17	169	89	M5 x 20	10	4	0,100
615 722 00	22	40	21	26	187	18	146	90	M5 x 20	10	4	0,110
615 725 00	25	47	26	32	300	24	147	78	M6 x 25	17	4	0,190
615 730 00	30	55	26	32	510	32	174	95	M6 x 25	17	6	0,270
615 735 00	35	60	31	37	820	47	172	100	M6 x 30	17	8	0,360
615 738 00	38	65	31	37	880	47	157	92	M6 x 30	17	8	0,430
615 740 00	40	65	31	37	1000	50	171	99	M6 x 30	17	8	0,400
615 750 00	50	80	36	44	2150	89	190	118	M8 x 35	40	8	0,700

* Screws with special coating.

T = transmittable torque at F_{ax} = 0.
F_{ax} = transmittable axial force at T = 0.
P_W = surface pressure onto the shaft.
P_N = surface pressure onto the hub.
T_A = fastening torque of the screws.

What is QPQ Nitro Carburising?

QPQ means:

Q = Quench (nitrocarburising followed by oxidising cooling process).

P = Polish (mechanical polishing up to desired surface finish before nitrocarburising).

Q = Quench (Oxidising to increase the corrosion resistance).

Salt-bath nitro carburising using the TENIFER method is, in many cases, a good alternative to other surface layer treatments as case hardening or hard plating. The principle task of the QPQ surface refinement is to protect machine components of all industries against wear and corrosion, but it also meets other functional requirements as, e.g., improving the endurance strength.

Mounting und Hub Calculation

Notes regarding fit, surface structure, mounting, demounting and hub calculation see page 332.

QPQ Surface Properties

Very good corrosion resistance, better than hard chrome or chem. nickel. Corrosion resistance in the salt spray test SS CASS in accordance with DIN 50021.

Layer thickness of 10 - 25 µm possible. For medium operational demands we recommend a layer thickness of approx. 15 µm at a 90 minute treatment.

Only very small changes in dimensions (only 5 µm), as the surface modification is achieved through diffusion and not application.

Surface hardness same as clamping set material ≥ 350 HV.

Improved wear resistance, no fretting corrosion, no cold shut.

Increased endurance strength, sometimes up to 100% higher.

Is completely safe to use with food as long as there is no contact with any acidic substances with a pH-value of ≤ 4.

Locking Assemblies BAR, Stainless

Material: Stainless steel 1.4401 (SS316).

- For fixing a hub (e.g. drive wheel, rotor or similar) on a shaft.
- Stainless Steel.
- For low torques.
- Very good distribution of pressure.
- Very good self-centering.
- Self-releasing at dismounting.
- Also suitable for large hub and shaft tolerances.
- Slight axial offset possible during assembly.

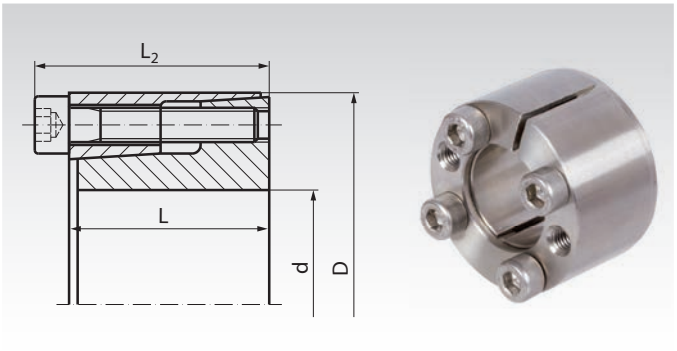

Ordering Details: e.g.: Product No. 615 994 06, Locking Assembly BAR Stainless 6 mm

Product No.	d mm	D mm	L mm	L_2 mm	at T_A transmittable T Nm	F_{ax} kN	Surface Pressure at Shaft P_W N/mm²	at Hub P_N N/mm²	Tensioning Screw DIN 912 Size	Fastening Torque T_A Nm	Weight kg
615 994 06	6	16	11	13,5	3	0,9	49	19	M2,5	0,5	0,012
615 994 07	7	17	11	13,5	3	0,9	42	17	M2,5	0,5	0,013
615 994 08	8	18	11	13,5	4	0,9	37	17	M2,5	0,5	0,015
615 994 09	9	20	13	15,5	6	1,2	37	17	M2,5	0,5	0,020
615 994 10	10	20	13	15,5	6	1,2	33	17	M2,5	0,5	0,019
615 994 11	11	22	13	15,5	7	1,2	30	15	M2,5	0,5	0,024
615 994 12	12	22	13	15,5	7	1,2	26	15	M2,5	0,5	0,022
615 994 14	14	26	17	20	13	1,9	28	15	M3	0,9	0,039
615 994 15	15	28	17	20	14	1,9	26	14	M3	0,9	0,044
615 994 16	16	32	17	21	28	3,5	45	23	M4	2,2	0,066
615 994 17	17	35	21	25	30	3,5	34	17	M4	2,2	0,092
615 994 18	18	35	21	25	32	3,5	32	17	M4	2,2	0,087
615 994 19	19	35	21	25	34	3,5	31	17	M4	2,2	0,084
615 994 20	20	38	21	26	55	5,5	45	24	M5	4,2	0,100
615 994 22	22	40	21	26	61	5,5	41	23	M5	4,2	0,110
615 994 24	24	47	26	32	96	8,0	44	23	M6	7,3	0,200
615 994 25	25	47	26	32	100	8,0	43	23	M6	7,3	0,190
615 994 28	28	50	26	32	210	15,0	57	32	M6	7,3	0,220
615 994 30	30	55	26	32	220	15,0	54	29	M6	7,3	0,250
615 994 32	32	55	26	32	240	15,0	50	29	M6	7,3	0,250
615 994 35	35	60	31	37	350	20,0	55	32	M6	7,3	0,360
615 994 38	38	65	31	37	380	20,0	51	29	M6	7,3	0,430
615 994 40	40	65	31	37	400	20,0	48	29	M6	7,3	0,400

T = transmittable torque at F_{ax} = 0.
F_{ax} = transmittable axial force at T = 0.
P_W = surface pressure onto the shaft.
P_N = surface pressure onto the hub.
T_A = fastening torque of the screws.

Hub Calculation and Selection Tool
on the Internet at **www.maedler.de**
in the section **MÄDLER®-Tools**

Fit, Surface

Shaft and hub up to tolerance h8/H8.
Surface finish for shaft and hub < 10µm.

Mounting

The locking assembly has to sit inside the bore by at least the measure „L“. Slightly oil the locking assembly before mounting, do not use molybdenum disulphide or fat. Tighten the screws evenly and crosswise in several steps.

Demounting

Remove all tensioning screws and screw them into the (usually unused) forcing thread of the front ring, until the ring is released.

Locking Assemblies COM-A

Material: Steel.

- For fixing a hub (e.g. V-belt pulley or similar) on a shaft.
- For medium high torques.
- Not self-centering.
- Self-releasing at dismounting.
- No axial movement during mounting.

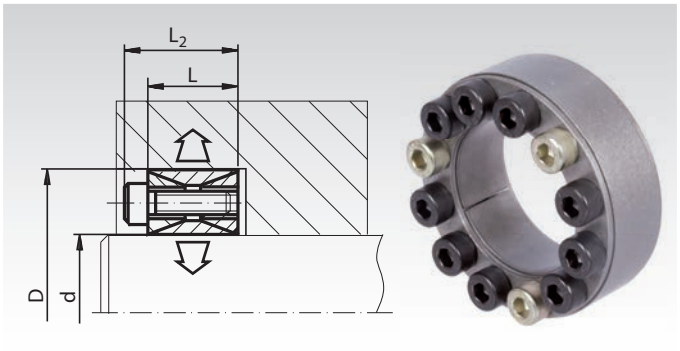

Ordering Details: e.g.: Product No. 615 519 00, Locking Assembly COM-A, 19 mm

Product No.	d mm	D mm	L mm	L_2 mm	T Nm	F_{ax} kN	P_w N/mm²	P_N N/mm²	Screws 12.9 Number x Size	T_A Nm	Weight kg
615 519 00	19	47	20	26	270	28	221	93	8 x M6	15	0,20
615 520 00	20	47	20	26	290	28	232	98	8 x M6	15	0,22
615 522 00	22	47	20	26	290	30	200	90	8 x M6	15	0,23
615 524 00	24	50	20	26	380	32	216	103	8 x M6	15	0,23
615 525 00	25	50	20	26	400	33	200	100	8 x M6	15	0,23
615 528 00	28	55	20	26	520	36	208	104	10 x M6	15	0,27
615 530 00	30	55	20	26	520	37	183	99	10 x M6	15	0,26
615 532 00	32	60	20	26	690	43	209	112	12 x M6	15	0,30
615 535 00	35	60	20	26	770	44	196	113	12 x M6	15	0,30
615 538 00	38	65	20	26	940	49	202	116	14 x M6	15	0,35
615 540 00	40	65	20	26	980	49	190	115	14 x M6	15	0,32
615 542 00	42	75	24	32	1560	74	233	129	12 x M8	37	0,57
615 545 00	45	75	24	32	1700	74	216	127	12 x M8	37	0,55
615 548 00	48	80	24	32	1830	74	214	122	12 x M8	37	0,60
615 550 00	50	80	24	32	1830	75	196	118	12 x M8	37	0,56
615 555 00	55	85	24	32	2490	89	218	140	14 x M8	37	0,65
615 560 00	60	90	24	32	2640	92	192	126	14 x M8	37	0,66
615 565 00	65	95	24	32	3240	99	202	136	16 x M8	37	0,72
615 570 00	70	110	28	38	4700	124	218	135	14 x M10	70	1,27
615 575 00	75	115	28	38	4800	135	185	119	14 x M10	70	1,33
615 580 00	80	120	28	38	5400	137	185	124	14 x M10	70	1,35
615 585 00	85	125	28	38	6300	146	195	130	16 x M10	70	1,45
615 590 00	90	130	28	38	6500	148	178	124	16 x M10	70	1,55
615 595 00	95	135	28	38	7800	165	193	134	18 x M10	70	1,65
615 600 00	100	145	33	45	9560	187	195	135	14 x M12	127	2,20

More sizes up to d=1,000mm for 1,980,000Nm are available.
Price and delivery time on request.

T = transmittable torque at F_{ax} = 0.
F_{ax} = transmittable axial force at T = 0.
P_W = surface pressure onto the shaft.
P_N = surface pressure onto the hub.
T_A = fastening torque of the screws.

Fit

Shaft h8, Hub H8.
Surface roughness max. 12.5µm.

Mounting

Slightly oil the locking assembly before mounting, do not use molybdenum disulphide or grease. Tighten the screws evenly and crosswise in several steps.

Demounting

Due to the cone angle, the locking assembly is usually released once all screws have been fully unfastened. There a three large auxiliary threads cut into the front ring, which serve to remove this ring.

Locking Assemblies COM-A, Stainless

Material: Stainless steel 1.4401 (SS316).

- For fixing a hub (e.g. V-belt pulley or similar) on a shaft.
- For low torques.
- Not self-centering.
- Self-releasing at dismounting.
- No axial movement during mounting.

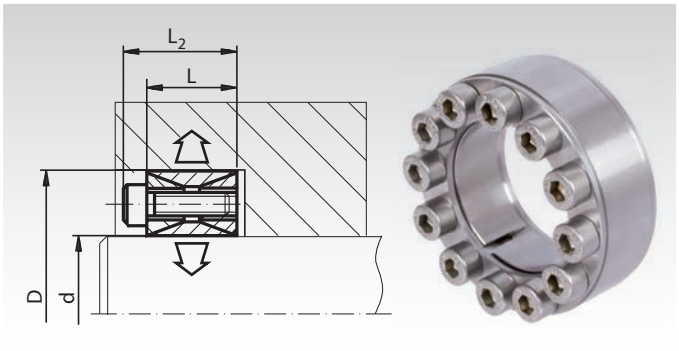

Ordering Details: e.g.: Product No. 615 995 20, Locking Assembly COM-A, stainless, 20 mm

Product No.	d mm	D mm	L mm	L_2 mm	T Nm	F_{ax} kN	P_w N/mm²	P_N N/mm²	Screws A2 DIN 912	T_A Nm	Weight kg
615 995 20	20	47	20	26	110	11	133	57	M6	8	0,21
615 995 22	22	47	20	26	120	11	121	57	M6	8	0,20
615 995 24	24	50	20	26	150	12	125	60	M6	8	0,22
615 995 25	25	50	20	26	155	12	120	60	M6	8	0,22
615 995 28	28	55	20	26	170	12	107	55	M6	8	0,27
615 995 30	30	55	20	26	185	12	100	55	M6	8	0,25
615 995 32	32	60	20	26	265	16	125	67	M6	8	0,30
615 995 35	35	60	20	26	290	16	114	67	M6	8	0,29
615 995 38	38	65	20	26	390	20	131	77	M6	8	0,33
615 995 40	40	65	20	26	410	20	125	77	M6	8	0,32
615 995 45	45	75	24	32	635	28	129	78	M8	18	0,53
615 995 50	50	80	24	32	700	28	116	73	M8	18	0,56

T = transmittable torque at F_{ax} = 0.
F_{ax} = transmittable axial force at T = 0.
P_W = surface pressure onto the shaft.
P_N = surface pressure onto the hub.
T_A = fastening torque of the screws.

Fit

Shaft h8, Hub H8.
Surface roughness max. 16µm.

Mounting

Slightly oil the locking assembly before mounting, do not use molibdenum disulphide or grease. Tighten the screws evenly and crosswise in several steps.

Demounting

Due to the cone angle, the locking assembly is usually released once all screws have been fully unfastened. There a three large auxiliary threads cut into the front ring, which serve to remove this ring.

Locking Assemblies COM-AS

Material: Steel.

- For fixing a hub (e.g. V-belt pulley or similar) on a shaft.
- For medium high torques. Like COM-A, but with slotted rings.
- Not self-centering.
- Self-releasing at dismounting.
- No axial movement during mounting.

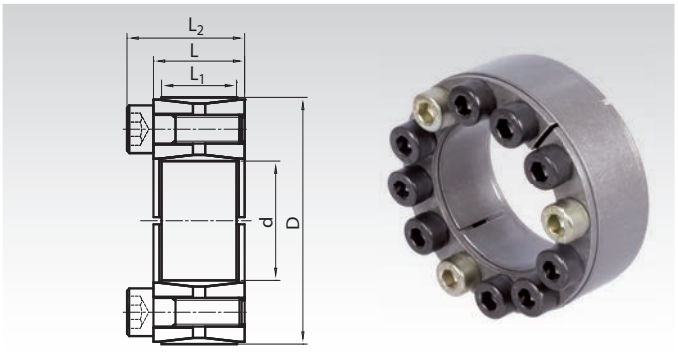

Ordering Details: e.g.: Product No. 615 300 19, Locking Assembly COM-AS, 19 mm

Product No.	d mm	D mm	L mm	L_1 mm	L_2 mm	T Nm	F_{ax} kN	P_W N/mm²	P_N N/mm²	Screws 12.9 Number x Size	T_A Nm	Weight kg
615 300 19	19	47	20	17	26	320	33	225	98	8 x M6	15	0,20
615 300 20	20	47	20	17	26	340	33	237	103	8 x M6	15	0,22
615 300 22	22	47	20	17	26	340	35	204	95	8 x M6	15	0,23
615 300 24	24	50	20	17	26	450	38	220	108	8 x M6	15	0,23
615 300 25	25	50	20	17	26	470	39	204	105	8 x M6	15	0,23
615 300 28	28	55	20	17	26	610	42	212	109	10 x M6	15	0,27
615 300 30	30	55	20	17	26	610	44	187	104	10 x M6	15	0,26
615 300 32	32	60	20	17	26	810	51	213	118	12 x M6	15	0,30
615 300 35	35	60	20	17	26	910	52	200	119	12 x M6	15	0,30
615 300 38	38	65	20	17	26	1110	58	206	122	14 x M6	15	0,35
615 300 40	40	65	20	17	26	1160	58	194	121	14 x M6	15	0,32
615 300 42	42	75	24	20	32	1840	87	238	135	12 x M8	37	0,57
615 300 45	45	75	24	20	32	2000	87	220	133	12 x M8	37	0,55
615 300 48	48	80	24	20	32	2200	87	218	128	12 x M8	37	0,60
615 300 50	50	80	24	20	32	2200	89	200	124	12 x M8	37	0,56
615 300 55	55	85	24	20	32	2900	105	222	147	14 x M8	37	0,65
615 300 60	60	90	24	20	32	3100	109	196	132	14 x M8	37	0,66
615 300 65	65	95	24	20	32	3800	117	206	143	16 x M8	37	0,72
615 300 70	70	110	28	24	38	5500	146	222	142	14 x M10	70	1,27
615 300 75	75	115	28	24	38	5700	159	189	125	14 x M10	70	1,33
615 300 80	80	120	28	24	38	6400	162	189	130	14 x M10	70	1,35
615 300 85	85	125	28	24	38	7400	172	199	137	16 x M10	70	1,45
615 300 90	90	130	28	24	38	7700	175	182	130	16 x M10	70	1,55
615 300 95	95	135	28	24	38	9200	195	197	141	18 x M10	70	1,65
615 301 00	100	145	33	26	45	11300	221	199	142	14 x M12	127	2,2

More sizes up to d=1,000mm for 2,336,000Nm are available.
Price and delivery time on request.

T = transmittable torque at F_{ax} = 0.
F_{ax} = transmittable axial force at T = 0.
P_W = surface pressure onto the shaft.
P_N = surface pressure onto the hub.
T_A = fastening torque of the screws.

Fit

Shaft h8, Hub H8.
Surface roughness max. 12.5µm.

Mounting

Slightly oil the locking assembly before mounting, do not use molybdenum disulphide or grease. Tighten the screws evenly and crosswise in several steps.

Demounting

Due to the cone angle, the locking assembly is usually released once all screws have been fully unfastened. There are three large auxiliary threads cut into the front ring, which serve to remove this ring.

Locking Assemblies COM-B

Material: Steel.

- For fixing a hub (e.g. timing belt pulley or similar) on a shaft.
- For medium torques.
- Also suitable for small hub diameters.
- Self-centering.
- Self-locking.
- No axial movement during mounting.

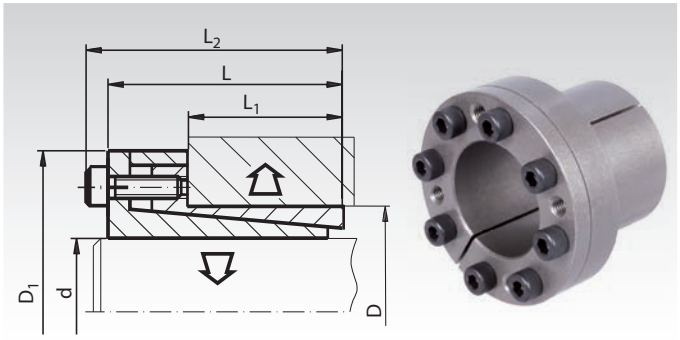

Ordering Details: e.g.: Product No. 615 606 00, Locking Assembly COM-B, 6 mm

Product No.	d mm	D mm	L mm	L_1 mm	L_2 mm	D_1 mm	T Nm	F_{ax} kN	P_W N/mm²	P_N N/mm²	Screw 12.9 Number x Size	T_A Nm	Weight g
615 606 00	6	14	21	10	24	25	12	4	185	80	3 x M3	2	0,05
615 606 35	6,35	14	21	10	24	25	12	4	185	80	3 x M3	2	0,05
615 608 00	8	15	25	12	29	27	29	7	207	111	3 x M4	5	0,07
615 609 00	9	16	26	14	30	28	42	10	197	110	4 x M4	5	0,07
615 609 53	9,53	16	26	14	30	28	42	10	197	110	4 x M4	5	0,07
615 610 00	10	16	26	14	30	28	48	10	179	112	4 x M4	5	0,07
615 611 00	11	18	26	14	30	32	51	10	165	102	4 x M4	5	0,07
615 612 00	12	18	26	14	30	32	55	10	152	100	4 x M4	5	0,08
615 612 70	12,7	18	26	14	30	32	55	10	152	100	4 x M4	5	0,08
615 614 00	14	23	26	14	30	38	68	10	130	80	4 x M4	5	0,11
615 615 00	15	24	36	16	42	45	133	18	194	121	3 x M6	17	0,22
615 616 00	16	24	36	16	42	45	140	18	180	118	3 x M6	17	0,22
615 618 00	18	26	38	18	44	47	200	22	180	125	4 x M6	17	0,23
615 619 00	19	27	38	18	44	49	210	22	172	121	4 x M6	17	0,25
615 620 00	20	28	38	18	44	50	220	22	160	115	4 x M6	17	0,26
615 622 00	22	32	45	25	51	54	250	22	113	78	4 x M6	17	0,35
615 624 00	24	34	45	25	51	56	270	22	106	76	4 x M6	17	0,36
615 625 00	25	34	45	25	51	56	280	22	101	76	4 x M6	17	0,34
615 625 40	25,4	34	45	25	51	56	280	22	101	76	4 x M6	17	0,34
615 628 00	28	39	45	25	51	61	450	32	130	93	6 x M6	17	0,42
615 630 00	30	41	45	25	51	62	500	32	133	95	6 x M6	17	0,43
615 632 00	32	43	45	25	51	65	540	35	115	86	6 x M6	17	0,49
615 635 00	35	47	52	32	58	69	800	44	106	81	8 x M6	17	0,55
615 638 00	38	50	52	32	58	72	900	45	105	79	8 x M6	17	0,62
615 640 00	40	53	52	32	58	75	900	45	92	68	8 x M6	17	0,64
615 642 00	42	55	52	32	58	78	1000	47	90	70	8 x M6	17	0,85
615 645 00	45	59	70	45	78	86	1800	80	105	81	8 x M8	41	1,05
615 648 00	48	62	70	45	78	87	1950	81	102	78	8 x M8	41	1,13
615 650 00	50	65	70	45	78	92	2020	81	96	72	8 x M8	41	1,26
615 655 00	55	71	80	55	88	98	2730	95	89	68	9 x M8	41	1,53
615 660 00	60	77	80	55	88	104	2870	98	76	61	9 x M8	41	1,66
615 665 00	65	84	80	55	88	111	3190	99	73	57	9 x M8	41	1,90
615 670 00	70	90	96	65	106	119	5150	147	88	69	9 x M10	83	3,00
615 675 00	75	95	96	65	106	126	5710	153	82	66	9 x M10	83	3,10
615 680 00	80	100	96	65	106	131	8260	196	103	82	12 x M10	83	3,30
615 685 00	85	106	96	65	106	137	8670	204	97	77	12 x M10	83	3,60
615 690 00	90	112	96	65	106	144	8800	206	88	74	12 x M10	83	4,00
615 695 00	95	120	96	65	106	149	11300	237	103	82	14 x M10	83	4,70
615 700 00	100	125	96	65	106	154	14300	285	114	90	18 x M10	83	5,20

More sizes up to d=130mm for 24,800Nm are available.
Price and delivery time on request.

T = transmittable torque at F_{ax} = 0.
F_{ax} = transmittable axial force at T = 0.
P_W = surface pressure onto the shaft.
P_N = surface pressure onto the hub.
T_A = fastening torque of the screws.

Fit

Shaft h8, Hub H8.
Surface roughness max. 12.5µm.

Mounting

Slightly oil the locking assembly before mounting, do not use molibdenum disulphide or grease. Tighten the screws evenly and crosswise in several steps.

Demounting

Remove all tensioning screws and screw them into the (usually unused) forcing thread of the front flange, until the flange is released.

Locking Assemblies COM-B, Stainless

Material: Stainless steel 1.4401 (SS316).

- For fixing a hub (e.g. timing belt pulley or similar) on a shaft.
- For low torques.
- Also suitable for small hub diameters.
- Self-centering.
- Self-locking.
- No axial movement during mounting.

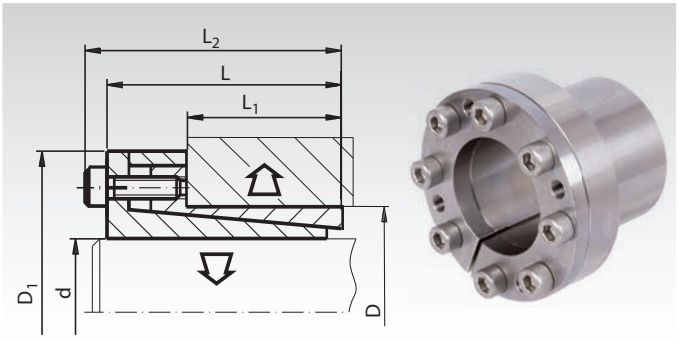

Ordering Details: e.g.: Product No. 615 995 10, Locking Assembly COM-B, stainless, 10 mm

Product No.	d mm	D mm	L mm	L_1 mm	L_2 mm	D_1 mm	T Nm	F_{ax} kN	P_w N/mm²	P_N N/mm²	Screw A2 DIN 912	T_A Nm	Weight kg
615 996 10	10	16	26	14	30	28	22	4	82	51	M4	2	0,12
615 996 12	12	18	26	14	30	32	26	4	69	46	M4	2	0,14
615 996 14	14	23	26	14	30	38	30	4	59	36	M4	2	0,15
615 996 15	15	24	36	16	42	45	73	10	107	67	M6	8	0,22
615 996 16	16	24	36	16	42	45	78	10	101	67	M6	8	0,22
615 996 18	18	26	38	18	44	47	87	10	79	55	M6	8	0,23
615 996 19	19	27	38	18	44	49	92	10	75	53	M6	8	0,25
615 996 20	20	28	38	18	44	50	97	10	71	51	M6	8	0,25
615 996 22	22	32	45	25	51	54	105	10	47	32	M6	8	0,32
615 996 24	24	34	45	25	51	56	175	15	64	45	M6	8	0,34
615 996 25	25	34	45	25	51	56	180	15	62	45	M6	8	0,35
615 996 28	28	39	45	25	51	61	200	15	55	40	M6	8	0,41
615 996 30	30	41	45	25	51	62	220	15	51	38	M6	8	0,41
615 996 32	32	43	45	25	51	65	310	19	64	48	M6	8	0,48
615 996 35	35	47	52	32	58	69	340	19	46	34	M6	8	0,55
615 996 38	38	50	52	32	58	72	370	19	42	32	M6	8	0,58
615 996 40	40	53	52	32	58	75	390	19	40	30	M6	8	0,63
615 996 45	45	59	70	45	78	86	820	36	48	36	M8	18	1,03
615 996 50	50	65	70	45	78	92	910	36	43	33	M8	18	1,27

Hub Calculation and Selection Tool
on the Internet at **www.maedler.de**
in the section **MÄDLER®-Tools**

T = transmittable torque at F_{ax} = 0.
F_{ax} = transmittable axial force at T = 0.
P_W = surface pressure onto the shaft.
P_N = surface pressure onto the hub.
T_A = fastening torque of the screws.

Fit

Shaft h8, Hub H8.
Surface roughness max. 16µm.

Mounting

Slightly oil the locking assembly before mounting, do not use molybdenum disulphide or grease. Tighten the screws evenly and crosswise in several steps.

Demounting

Remove all tensioning screws and screw them into the (usually unused) forcing thread of the front flange, until the flange is released.

Locking Assemblies COM-C

Material: Steel.

- For fixing a hub (e.g. drive wheel, rotor or similar) on a shaft.
- For medium to high torques.
- Self-centering.
- No axial offset.

Concentricity: 0.02 to 0.04 mm.

Ordering Details: e.g.: Product No. 615 571 19, Locking Assembly COM-C, 19 mm

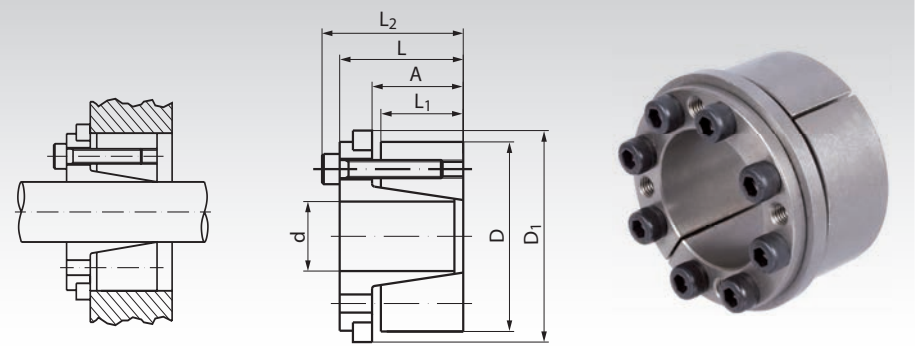

Product No.	d mm	D mm	L_1 mm	A mm	L mm	L_2 mm	D_1 mm	at T_A transmittable T Nm	F_{ax} kN	Surface Pressure Shaft P_w N/mm²	Hub P_N N/mm²	Screws DIN 912 12.9 Number x size	T_A Nm	Weight kg
615 571 19	19	47	26	31	39	45	53	294	20	228	96	4x M6x20	17	0,45
615 571 20	20	47	26	31	39	45	53	320	33	172	74	6x M6x20	17	0,37
615 571 22	22	47	26	31	39	45	53	366	33	158	74	6x M6x20	17	0,40
615 571 24	24	50	26	31	39	45	56	380	34	139	67	6x M6x20	17	0,45
615 571 25	25	50	26	31	39	45	56	430	35	144	72	6x M6x20	17	0,44
615 571 28	28	55	26	31	39	45	61	480	35	128	66	6x M6x20	17	0,50
615 571 30	30	55	26	31	39	45	61	530	35	120	68	6x M6x20	17	0,45
615 571 32	32	60	26	31	39	45	66	680	43	138	76	8x M6x20	17	0,59
615 571 35	35	60	26	31	39	45	66	780	43	134	79	8x M6x20	17	0,53
615 571 38	38	65	26	31	39	45	71	860	45	125	70	8x M6x20	17	0,62
615 571 40	40	65	26	31	39	45	71	860	45	115	67	8x M6x20	17	0,60
615 571 42	42	75	30	36	47	55	81	1350	60	138	77	6x M8x30	41	1,05
615 571 45	45	75	30	36	47	55	81	1450	60	129	77	6x M8x30	41	0,98
615 571 48	48	80	30	36	47	55	86	1550	60	125	73	6x M8x30	41	1,30
615 571 50	50	80	30	36	47	55	86	1570	70	109	69	6x M8x30	41	1,00
615 571 55	55	85	30	36	47	55	91	2400	80	142	95	8x M8x30	41	1,10
615 571 60	60	90	30	36	47	55	96	2500	80	125	86	8x M8x30	41	1,20
615 571 65	65	95	30	36	47	55	102	2700	90	113	78	8x M8x30	41	1,25
615 571 70	70	110	40	46	61	71	117	4500	130	120	77	8x M10x35	83	2,40
615 571 75	75	115	40	46	61	71	122	5000	130	119	79	8x M10x35	83	2,70
615 571 80	80	120	40	46	61	71	127	5300	130	109	74	8x M10x35	83	2,70
615 571 85	85	125	40	46	61	71	132	7000	160	129	89	10x M10x35	83	3,00
615 571 90	90	130	40	46	61	71	137	7400	160	123	83	10x M10x35	83	3,00
615 571 95	95	135	40	46	61	71	142	7500	170	109	81	10x M10x35	83	3,00
615 572 00	100	145	46	52	70	82	153	9400	190	112	78	8x M12x40	145	5,50

More sizes up to d=180mm for 34,600Nm are available.
Price and delivery time on request.

T = transmittable torque at F_{ax} = 0.
F_{ax} = transmittable axial force at T = 0.
P_W = surface pressure onto the shaft.
P_N = surface pressure onto the hub.
T_A = fastening torque of the screws.

Fit

Shaft h8, Hub H8.
Surface roughness hub/shaft max. 12.5µm.

Mounting

Slightly oil the locking assembly before mounting, do not use MoS2 or grease.
Tighten the screws evenly and crosswise in several steps to the set torque.

Demounting

Remove all tensioning screws and screw them into the unused forcing threads of the front flange evenly and crosswise in several steps, until the flange is released.

Locking Assemblies COM-CB1

Material: Steel.

- For fixing a hub (e.g. drive wheel, rotor or similar) on a shaft.
- For medium high torques.
- Self-centering.
- Self-locking.
- Axial movement during mounting.

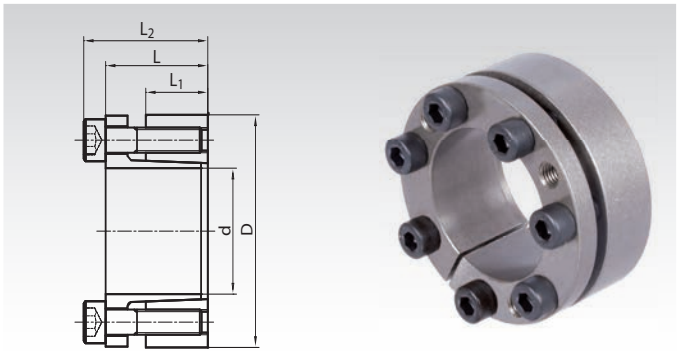

Ordering Details: e.g.: Product No. 615 573 18, Locking Assembly COM-CB1, 18 mm

Product No.	d mm	D mm	L mm	L_1 mm	L_2 mm	T Nm	F_{ax} kN	P_W N/mm²	P_N N/mm²	Screws 12.9 Number x Size	T_A Nm	Weight kg
615 573 18	18	47	28	17	34	310	28	278	121	5 x M6	14	0,29
615 573 19	19	47	28	17	34	331	29	261	116	5 x M6	14	0,29
615 573 20	20	47	28	17	34	370	35	294	125	5 x M6	14	0,29
615 573 22	22	47	28	17	34	370	37	247	114	5 x M6	14	0,29
615 573 24	24	50	28	17	34	470	40	255	125	5 x M6	14	0,30
615 573 25	25	50	28	17	34	600	44	308	152	6 x M6	14	0,29
615 573 28	28	55	28	17	34	600	46	243	123	6 x M6	14	0,35
615 573 30	30	55	28	17	34	610	46	217	120	6 x M6	14	0,35
615 573 32	32	60	28	17	34	940	58	286	150	8 x M6	14	0,40
615 573 35	35	60	28	17	34	1030	58	262	150	8 x M6	14	0,40
615 573 38	38	65	28	17	34	1140	60	248	144	8 x M6	14	0,40
615 573 40	40	65	28	17	34	1170	60	227	141	8 x M6	14	0,40
615 573 42	42	75	33	20	41	2150	100	315	179	7 x M8	35	0,70
615 573 45	45	75	33	20	41	2220	100	293	172	7 x M8	35	0,70
615 573 48	48	80	33	20	41	2340	100	284	168	7 x M8	35	0,75
615 573 50	50	80	33	20	41	2400	100	242	149	7 x M8	35	0,70
615 573 55	55	85	33	20	41	3080	110	270	174	8 x M8	35	0,77
615 573 60	60	90	33	20	41	3400	120	248	166	8 x M8	35	0,84
615 573 65	65	95	33	20	41	4050	120	253	174	9 x M8	35	0,88
615 573 70	70	110	40	24	50	6360	180	283	182	8 x M10	70	1,58
615 573 75	75	115	40	24	50	6900	180	268	129	8 x M10	70	1,60
615 573 80	80	120	40	24	50	7400	190	260	130	8 x M10	70	1,70
615 573 85	85	125	40	24	50	8400	190	273	142	9 x M10	70	2,0
615 573 90	90	130	40	24	50	9000	200	233	121	9 x M10	70	2,2
615 573 95	95	135	40	24	50	11000	230	271	140	10 x M10	70	1,9
615 574 00	100	145	44	26	56	13100	260	265	186	8 x M12	125	3,0

More sizes up to d=200mm for 69,000Nm are available.
Price and delivery time on request.

T = transmittable torque at F_{ax} = 0.
F_{ax} = transmittable axial force at T = 0.
P_W = surface pressure onto the shaft.
P_N = surface pressure onto the hub.
T_A = fastening torque of the screws.

Fit

Shaft h8, Hub H8.
Surface roughness max. 12.5µm.

Mounting

Slightly oil the locking assembly before mounting, do not use molybdenum disulphide or grease. Tighten the screws evenly and crosswise in several steps.

Demounting

Remove all tensioning screws and screw them into the (usually unused) forcing thread of the front flange, until the flange is released.

Locking Assemblies COM-CB2

Material: Steel.

- For fixing a hub (e.g. spur toothed gear or similar) on a shaft.
- For medium high torques.
- Self-centering.
- Self-locking.
- No axial movement during mounting.

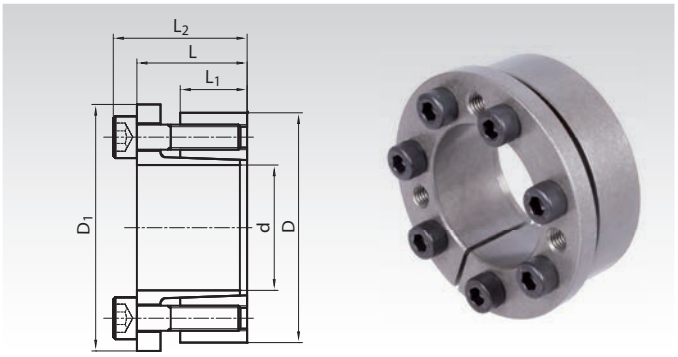

Ordering Details: e.g.: Product No. 615 575 18, Locking Assembly COM-CB2, 18 mm

Product No.	d mm	D mm	L mm	L_1 mm	L_2 mm	D_1 mm	T Nm	F_{ax} kN	P_W N/mm²	P_N N/mm²	Screws 12.9 Number x Size	T_A Nm	Weight kg
615 575 18	18	47	28	17	34	54	270	28	212	94	5 x M6	17	0,30
615 575 19	19	47	28	17	34	54	274	28	215	93	5 x M6	17	0,30
615 575 20	20	47	28	17	34	54	280	28	218	94	5 x M6	17	0,32
615 575 22	22	47	28	17	34	54	300	28	200	95	5 x M6	17	0,32
615 575 24	24	50	28	17	34	57	330	28	178	89	5 x M6	17	0,35
615 575 25	25	50	28	17	34	57	420	34	210	105	6 x M6	17	0,32
615 575 28	28	55	28	17	34	62	480	34	196	98	6 x M6	17	0,37
615 575 30	30	55	28	17	34	62	510	35	177	96	6 x M6	17	0,37
615 575 32	32	60	28	17	34	67	730	40	222	116	8 x M6	17	0,39
615 575 35	35	60	28	17	34	67	770	44	194	112	8 x M6	17	0,39
615 575 38	38	65	28	17	34	72	830	45	181	103	8 x M6	17	0,46
615 575 40	40	65	28	17	34	72	940	50	182	109	8 x M6	17	0,46
615 575 42	42	75	33	20	41	82	1590	70	234	130	7 x M8	41	0,72
615 575 45	45	75	33	20	41	82	1630	70	213	124	7 x M8	41	0,70
615 575 48	48	80	33	20	41	87	1740	70	198	119	7 x M8	41	0,80
615 575 50	50	80	33	20	41	87	1830	80	195	120	7 x M8	41	0,77
615 575 55	55	85	33	20	41	92	2210	80	192	125	8 x M8	41	0,80
615 575 60	60	90	33	20	41	97	2410	80	178	120	8 x M8	41	0,88
615 575 65	65	95	33	20	41	102	3090	90	192	131	9 x M8	41	0,93
615 575 70	70	110	40	24	50	117	4620	130	208	134	8 x M10	83	1,60
615 575 75	75	115	40	24	50	122	4900	130	191	123	8 x M10	83	1,76
615 575 80	80	120	40	24	50	127	5000	130	176	119	8 x M10	83	1,81
615 575 85	85	125	40	24	50	132	6300	150	195	135	9 x M10	83	1,90
615 575 90	90	130	40	24	50	137	6800	150	187	131	9 x M10	83	2,0
615 575 95	95	135	40	24	50	142	7700	160	191	132	10 x M10	83	2,1
615 576 00	100	145	44	26	56	152	9800	190	202	141	8 x M12	145	2,8

More sizes up to d=200mm for 48,000Nm are available.
Price and delivery time on request.

T = transmittable torque at F_{ax} = 0.
F_{ax} = transmittable axial force at T = 0.
P_W = surface pressure onto the shaft.
P_N = surface pressure onto the hub.
T_A = fastening torque of the screws.

Fit

Shaft h8, Hub H8.
Surface roughness max. 12.5µm.

Mounting

Slightly oil the locking assembly before mounting, do not use molybdenum disulphide or grease. Tighten the screws evenly and crosswise in several steps.

Demounting

Remove all tensioning screws and screw them into the (usually unused) forcing thread of the front flange, until the flange is released.

Locking Assemblies COM-CB3

Material: Steel.

- For fixing a hub (e.g. drive wheel, rotor or similar) on a shaft.
- 3 Ranges of sizes, for middle, higher and very high torques.
- Compact size in axial direction.
- Self-centering.
- Self-locking.
- No axial movement during mounting.

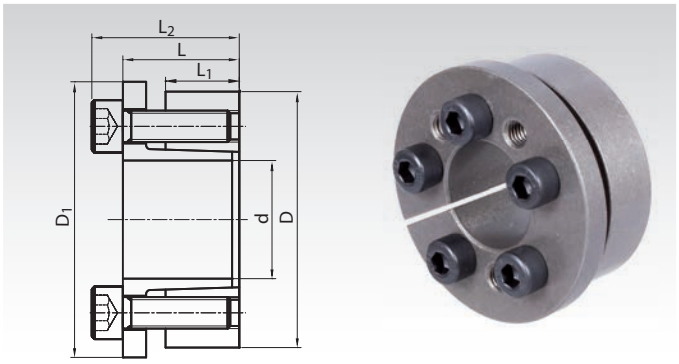

Ordering Details: e.g.: Product No. 615 577 14, Locking Assembly COM-CB3, 14 mm

Product No.	d	D	L	L_1	L_2	D_1	T	F_{ax}	P_W	P_N	Screws 12.9	T_A	Weight
Light series	mm	mm	mm	mm	mm	mm	Nm	kN	N/mm²	N/mm²	Number x Size	Nm	kg
615 577 14	14	55	30	17	38	62	120	17	207	56	3 x M8	25	0,49
615 577 16	16	55	30	17	38	62	136	18	175	53	3 x M8	25	0,48
615 577 18	18	55	30	17	38	62	150	18	163	56	3 x M8	25	0,47
615 577 19	19	55	30	17	38	62	170	19	158	58	3 x M8	25	0,47
615 577 20	20	55	30	17	38	62	160	17	141	53	3 x M8	25	0,46
615 577 22	22	55	30	17	38	62	290	26	189	77	3 x M8	35	0,45
615 577 24	24	55	30	17	38	62	290	24	165	73	3 x M8	35	0,43
615 577 25	25	55	30	17	38	62	300	24	160	73	3 x M8	35	0,42
615 577 28	28	55	30	17	38	62	430	31	173	89	3 x M8	41	0,40
615 577 30	30	55	30	17	38	62	450	30	158	86	3 x M8	41	0,38
Medium series													
615 578 24	24	65	30	17	38	72	430	40	237	87	5 x M8	30	0,63
615 578 25	25	65	30	17	38	72	440	40	221	86	5 x M8	30	0,62
615 578 28	28	65	30	17	38	72	610	40	248	107	5 x M8	35	0,59
615 578 30	30	65	30	17	38	72	590	40	222	103	5 x M8	35	0,57
615 578 32	32	65	30	17	38	72	660	40	202	100	5 x M8	35	0,56
615 578 35	35	65	30	17	38	72	950	50	243	131	5 x M8	41	0,52
615 578 38	38	65	30	17	38	72	1000	50	218	127	5 x M8	41	0,49
615 578 40	40	65	30	17	38	72	1090	50	213	131	5 x M8	41	0,47
Heavy series													
615 579 30	30	80	33	20	41	87	800	50	239	90	7 x M8	30	1,02
615 579 32	32	80	33	20	41	87	860	50	226	90	7 x M8	30	1,01
615 579 35	35	80	33	20	41	87	1100	60	239	105	7 x M8	35	0,98
615 579 38	38	80	33	20	41	87	1200	60	223	106	7 x M8	35	0,94
615 579 40	40	80	33	20	41	87	1200	60	203	102	7 x M8	35	0,91
615 579 42	42	80	33	20	41	87	1500	70	228	120	7 x M8	41	0,88
615 579 45	45	80	33	20	41	87	1600	70	215	121	7 x M8	41	0,84
615 579 48	48	80	33	20	41	87	1700	70	197	118	7 x M8	41	0,78
615 579 50	50	80	33	20	41	87	1800	70	195	122	7 x M8	41	0,74

T = transmittable torque at F_{ax} = 0.
F_{ax} = transmittable axial force at T = 0.
P_W = surface pressure onto the shaft.
P_N = surface pressure onto the hub.
T_A = fastening torque of the screws.

Hub Calculation and Selection Tool
on the Internet at www.maedler.de
in the section MÄDLER®-Tools

Fit

Shaft h8, Hub H8.
Surface roughness max. 12.5µm.

Mounting

Slightly oil the locking assembly before mounting, do not use molybdenum disulphide or grease. Tighten the screws evenly and crosswise in several steps.

Demounting

Remove all tensioning screws and screw them into the (usually unused) forcing thread of the front flange, until the flange is released.

Locking Assemblies COM-D

Material: Steel.

- For fixing a hub (e.g. drive wheel, rotor or similar) on a shaft.
- For high torques.
- Self-centering.
- Slight axial offset possible during assembly.

Concentricity: 0.02 to 0.04 mm.

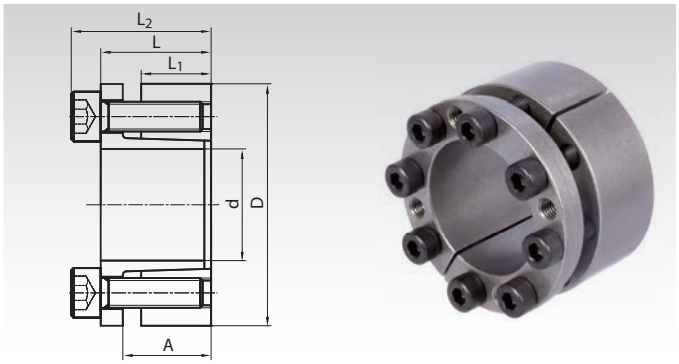

Ordering Details: e.g.: Product No. 615 570 19, Locking Assembly COM-D, 19 mm

Product No.	d	D	L_1	A	L	L_2	at T_A transmittable T	F_{ax}	Surface Pressure Shaft P_w	Hub P_N	Screws DIN 912 12.9	T_A	Weight
	mm	mm	mm	mm	mm	mm	Nm	kN	N/mm²	N/mm²	Number x size	Nm	kg
615 570 19	19	47	26	31	39	45	353	31	228	98	6x M6x25	17	0,39
615 570 20	20	47	26	31	39	45	530	52	274	118	6x M6x25	17	0,37
615 570 22	22	47	26	31	39	45	582	52	247	116	6x M6x25	17	0,35
615 570 24	24	50	26	31	39	45	650	53	244	120	6x M6x25	17	0,40
615 570 25	25	50	26	31	39	45	680	54	216	110	6x M6x25	17	0,38
615 570 28	28	55	26	31	39	45	760	56	200	105	6x M6x25	17	0,45
615 570 30	30	55	26	31	39	45	850	56	192	109	6x M6x25	17	0,43
615 570 32	32	60	26	31	39	45	1130	70	228	121	8x M6x25	17	0,53
615 570 35	35	60	26	31	39	45	1220	71	206	120	8x M6x25	17	0,50
615 570 38	38	65	26	31	39	45	1370	71	198	114	8x M6x25	17	0,60
615 570 40	40	65	26	31	39	45	1410	72	184	112	8x M6x25	17	0,56
615 570 42	42	75	30	36	47	55	2170	100	219	122	6x M8x30	41	0,95
615 570 45	45	75	30	36	47	55	2330	100	204	122	6x M8x30	41	0,92
615 570 48	48	80	30	36	47	55	2480	100	194	117	6x M8x30	41	1,10
615 570 50	50	80	30	36	47	55	2560	100	182	116	6x M8x30	41	1,00
615 570 55	55	85	30	36	47	55	3700	130	222	141	8x M8x30	41	1,10
615 570 60	60	90	30	36	47	55	3800	140	192	130	8x M8x30	41	1,16
615 570 65	65	95	30	36	47	55	4600	140	194	131	8x M8x30	41	1,20
615 570 70	70	110	40	46	61	71	7700	220	209	133	8x M10x35	83	2,30
615 570 75	75	115	40	46	61	71	8100	220	192	126	8x M10x35	83	2,50
615 570 80	80	120	40	46	61	71	8600	220	182	121	8x M10x35	83	2,70
615 570 85	85	125	40	46	61	71	11600	270	214	148	10x M10x35	83	2,90
615 570 90	90	130	40	46	61	71	12000	270	200	135	10x M10x35	83	3,20
615 570 95	95	135	40	46	61	71	13000	280	196	134	10x M10x35	83	3,50
615 571 00	100	145	46	52	70	82	15000	300	173	120	8x M12x40	145	4,00

More sizes up to d=180mm for 58,900Nm are available.
Price and delivery time on request.

T = transmittable torque at F_{ax} = 0.
F_{ax} = transmittable axial force at T = 0.
P_W = surface pressure onto the shaft.
P_N = surface pressure onto the hub.
T_A = fastening torque of the screws.

Fit

Shaft h8, Hub H8.
Surface roughness hub/shaft max. 12.5µm.

Mounting

Slightly oil the locking assembly before mounting, do not use MoS2 or grease.
Tighten the screws evenly and crosswise in several steps to the set torque.

Demounting

Remove all tensioning screws and screw them into the unused forcing threads of the front tensioning ring, until it is released.

Locking Assemblies COM-L

Material: Steel.

- For fixing a hub (e.g. drive wheel, rotor or similar) on a shaft.
- For very high torques.
- Self-centering.
- Slight axial offset possible during assembly.

Concentricity: 0.02 to 0.04 mm.

Ordering Details: e.g.: Product No. 615 511 25, Locking Assembly COM-L, 25 mm

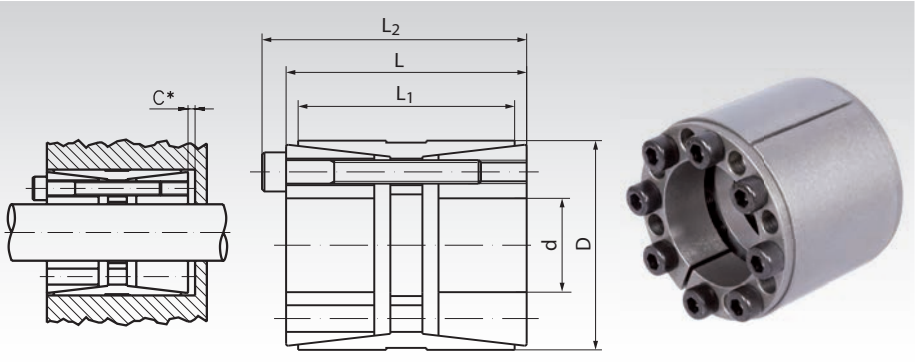

Product No.	d mm	D mm	L_1 mm	L mm	C* mm	L_2 mm	at T_A transmittable T Nm	at T_A transmittable F_{ax} kN	Surface Pressure Shaft P_w N/mm²	Surface Pressure Hub P_N N/mm²	Screws DIN 912 12.9 Number x size	T_A Nm	Weight kg
615 511 25	25	55	32	40	4	46	810	65	288	98	6x M6x35	17	0,35
615 511 28	28	55	32	40	4	46	950	65	268	102	6x M6x35	17	0,42
615 511 30	30	55	32	40	4	46	970	68	241	98	6x M6x35	17	0,40
615 511 35	35	60	44	54	5	60	1240	70	157	83	7x M6x45	17	0,60
615 511 38	38	75	44	54	5	62	2780	145	263	117	7x M8x50	41	1,15
615 511 40	40	75	44	54	5	62	3020	146	293	121	7x M8x50	41	0,59
615 511 42	42	75	44	54	5	62	3150	151	248	116	7x M8x50	41	1,25
615 511 45	45	75	44	54	5	62	3390	151	261	121	7x M8x50	41	0,74
615 511 48	48	80	56	64	4	72	3920	159	161	96	8x M8x55	41	1,30
615 511 50	50	80	56	64	4	72	4110	163	156	97	8x M8x55	41	1,26
615 511 55	55	85	56	64	4	72	4370	164	137	89	8x M8x55	41	1,36
615 511 60	60	90	56	64	4	72	6320	211	167	111	10x M8x55	41	1,46
615 511 65	65	95	56	64	4	72	7100	217	160	109	10x M8x55	41	1,55
615 511 70	70	110	70	78	4	88	11730	314	184	117	10x M10x60	83	2,9
615 511 75	75	115	70	78	5	88	11900	340	159	104	10x M10x60	83	3,0
615 511 80	80	120	70	78	5	88	16400	392	196	130	12x M10x60	83	3,3
615 511 85	85	125	70	78	5	88	16600	400	175	119	12x M10x60	83	3,4
615 511 90	90	130	70	78	5	88	18000	400	169	116	12x M10x60	83	3,5
615 511 95	95	135	70	78	5	88	19000	412	160	112	12x M10x60	83	3,7
615 512 00	100	145	90	100	6	112	27900	559	165	113	12x M12x80	145	5,5

* When using in a stepped bore, the clearance C is to be foreseen for demounting.

More sizes up to d=300mm for 444,000Nm are available.
Price and delivery time on request.

T = transmittable torque at F_{ax} = 0.
F_{ax} = transmittable axial force at T = 0.
P_W = surface pressure onto the shaft.
P_N = surface pressure onto the hub.
T_A = fastening torque of the screws.

Fit

Shaft h8, Hub H8.
Surface roughness hub/shaft max. 12.5µm.

Mounting

Slightly oil the locking assembly before mounting, do not use MoS2 or grease.
Tighten the screws evenly and crosswise in several steps to the set torque.
To ease mounting the outer ring and the rear tensioning ring can be fixed with screws via the forcing thread.

Demounting

Remove all tensioning screws and screw them into the unused forcing threads of the front tensioning ring, until it is released.
Then screw in the screws into the unused forcing threads of the outer ring, until the rear tensioning ring is released.

Locking Assemblies COM-LL

Material: Steel.

- For fixing a hub (e.g. drive wheel, rotor or similar) on a shaft.
- For very high torques.
- Self-centering.
- Self-locking.
- Axial movement during mounting.

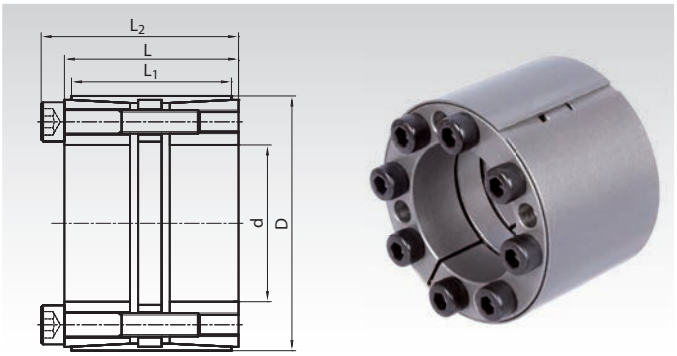

Ordering Details: e.g.: Product No. 615 513 25, Locking Assembly COM-LL, 25 mm

Product No.	d mm	D mm	L mm	L_1 mm	L_2 mm	T Nm	F_{ax} kN	P_W N/mm²	P_N N/mm²	Screws 12.9 Number x Size	T_A Nm	Weight kg
615 513 25	25	50	45	39	51	900	70	245	122	6 x M6	17	0,50
615 513 28	28	55	45	39	51	1010	70	219	111	6 x M6	17	0,60
615 513 30	30	55	45	39	51	1100	70	204	111	6 x M6	17	0,60
615 513 35	35	60	45	39	51	1340	76	175	102	8 x M6	17	0,70
615 513 38	38	65	45	39	51	1810	120	161	94	10 x M6	17	0,70
615 513 40	40	65	45	39	51	1920	120	153	94	10 x M6	17	0,70
615 513 42	42	75	64	56	72	2970	141	188	105	8 x M8	41	1,00
615 513 45	45	75	64	56	72	3150	141	175	105	8 x M8	41	0,90
615 513 48	48	80	64	56	72	4000	166	164	98	8 x M8	41	1,40
615 513 50	50	80	64	56	72	4850	192	159	102	8 x M8	41	1,26
615 513 55	55	85	64	56	72	5810	220	140	93	9 x M8	41	1,36
615 513 60	60	90	64	56	72	7460	249	170	117	10 x M8	41	1,46
615 513 65	65	95	64	56	72	8400	256	163	114	10 x M8	41	1,55
615 513 70	70	110	78	70	88	13800	371	188	123	10 x M10	83	2,9
615 513 75	75	115	78	70	88	14000	401	162	109	10 x M10	83	3,0
615 513 80	80	120	78	70	88	19400	463	200	137	12 x M10	83	3,3
615 513 85	85	125	78	70	88	19600	472	179	125	12 x M10	83	3,4
615 513 90	90	130	78	70	88	21200	472	172	122	12 x M10	83	3,5
615 513 95	95	135	78	70	88	22400	486	163	118	12 x M10	83	3,7
615 514 00	100	145	100	90	112	32900	660	168	119	12 x M12	145	5,5

More sizes up to d=300mm for 524,000Nm are available.
Price and delivery time on request.

T = transmittable torque at F_{ax} = 0.
F_{ax} = transmittable axial force at T = 0.
P_W = surface pressure onto the shaft.
P_N = surface pressure onto the hub.
T_A = fastening torque of the screws.

Fit

Shaft h8, Hub H8.
Surface roughness max. 12.5µm.

Mounting

Slightly oil the locking assembly before mounting, do not use molybdenum disulphide or grease. Tighten the screws evenly and crosswise in several steps.

Demounting

Remove all tensioning screws and screw them into the (usually unused) forcing thread of the front flange, until the flange is released.

Locking Assemblies COM-LLH

Material: Steel.

- For fixing a hub (e.g. sprocket or similar) on a shaft.
- For very high torques.
- Very good distribution of pressure.
- High resistant against bending forces.
- Self-centering.
- Self-locking.
- No axial movement during mounting.

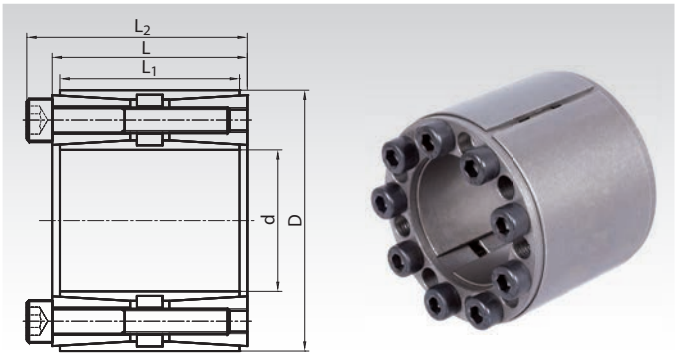

Ordering Details: e.g.: Product No. 615 580 42, Locking Assembly COM-LLH, 42 mm

Product No.	d mm	D mm	L mm	L_1 mm	L_2 mm	T Nm	F_{ax} kN	P_W N/mm²	P_N N/mm²	Screws 12.9 Number x Size	T_A Nm	Weight kg
615 580 42	42	75	64	56	72	3290	147	175	103	8 x M8	41	1,25
615 580 45	45	75	64	56	72	3500	147	157	95	8 x M8	41	1,30
615 580 48	48	80	64	56	72	3670	149	143	90	8 x M8	41	1,50
615 580 50	50	80	64	56	72	3800	161	141	91	8 x M8	41	1,40
615 580 55	55	85	64	56	72	4430	167	140	88	8 x M8	41	1,50
615 580 60	60	90	64	56	72	5590	182	130	96	10 x M8	41	1,50
615 580 65	65	95	64	56	72	6020	182	134	91	10 x M8	41	1,60
615 580 70	70	110	78	70	88	10200	290	162	100	10 x M10	83	3,0
615 580 75	75	115	78	70	88	11660	308	157	101	10 x M10	83	3,1
615 580 80	80	120	78	70	88	14000	351	166	109	12 x M10	83	3,5
615 580 85	85	125	78	70	88	16200	374	170	113	12 x M10	83	3,5
615 580 90	90	130	78	70	88	16780	380	159	107	12 x M10	83	3,8
615 580 95	95	135	78	70	88	18410	389	158	107	12 x M10	83	4,0
615 581 00	100	145	100	90	112	26600	533	158	109	12 x M12	145	6,0
615 581 10	110	155	100	90	112	29200	533	142	101	12 x M12	145	6,2
615 581 20	120	165	100	90	112	38400	641	157	114	14 x M12	145	6,8

More sizes up to d=600mm for 977,000Nm are available.
Price and delivery time on request.

T = transmittable torque at F_{ax} = 0.
F_{ax} = transmittable axial force at T = 0.
P_W = surface pressure onto the shaft.
P_N = surface pressure onto the hub.
T_A = fastening torque of the screws.

Hub Calculation and Selection Tool
on the Internet at www.maedler.de
in the section MÄDLER®-Tools

Fit

Shaft h8, Hub H8.
Surface roughness max. 12.5µm.

Mounting

Slightly oil the locking assembly before mounting, do not use molybdenum disulphide or grease. Tighten the screws evenly and crosswise in several steps.

Demounting

Remove all tensioning screws and screw them into the (usually unused) forcing thread of the front flange, until the flange is released.

Locking Assemblies COM-R

Material: Steel.

- For fixing a hub (e.g. drive wheel, rotor or similar) on a shaft.
- For lower to medium torques.
- Not self-centering.
- Loose clamping rings. For use with customer´s pressure sleeves and customer´s screws.
- Up to 4 clamping sets can be used in line.
- Versatile usage, for customized solutions.

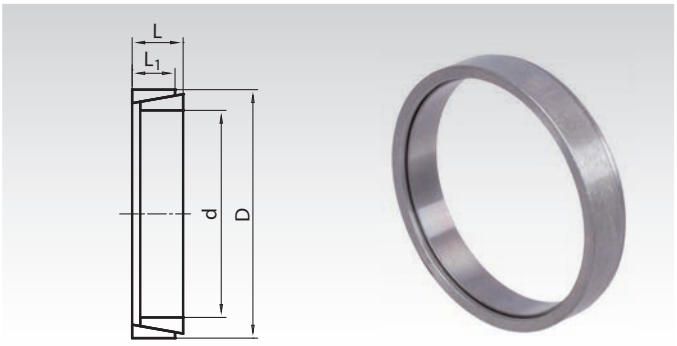

Ordering Details: e.g.: Product No. 615 000 06, Locking Assembly COM-R, 6 mm

Product No.	d mm	D mm	L mm	L_1 mm	T Nm	F_{ax} kN	P_W N/mm²	P_N N/mm²	F_A kN	Weight kg
615 000 06	6	9	4,5	3,7	2	0,83	116	76	4	0,002
615 000 07	7	10	4,5	3,7	3	0,85	101	67	5	0,002
615 000 08	8	11	4,5	3,7	5	1,22	125	94	6	0,002
615 000 09	9	12	4,5	3,7	8	1,83	146	109	15	0,002
615 000 10	10	13	4,5	3,7	10	1,83	130	101	16	0,002
615 000 12	12	15	4,5	3,7	11	1,91	115	90	16	0,002
615 000 14	14	18	6,3	5,3	23	3,31	120	94	26	0,005
615 000 15	15	19	6,3	5,3	25	3,34	113	88	27	0,005
615 000 16	16	20	6,3	5,3	28	3,40	110	89	27	0,006
615 000 17	17	21	6,3	5,3	29	3,59	102	82	27	0,006
615 000 18	18	22	6,3	5,3	33	3,68	102	82	33	0,007
615 000 19	19	24	6,3	5,3	47	4,96	133	105	33	0,007
615 000 20	20	25	6,3	5,3	55	5,54	140	109	33	0,009
615 000 22	22	26	6,3	5,3	65	5,88	132	113	34	0,007
615 000 24	24	28	6,3	5,3	73	5,89	130	110	34	0,008
615 000 25	25	30	6,3	5,3	73	6,02	117	97	37	0,009
615 000 28	28	32	6,3	5,3	85	6,13	112	97	40	0,010
615 000 30	30	35	6,3	5,3	90	6,14	99	84	40	0,012
615 000 32	32	36	6,3	5,3	127	7,99	126	112	44	0,011
615 000 35	35	40	7,0	6,0	166	9,20	121	107	54	0,016
615 000 38	38	44	7,0	6,0	186	9,84	113	98	60	0,021
615 000 40	40	45	8,0	6,6	226	10,8	113	103	70	0,021
615 000 42	42	48	8,0	6,6	226	11,3	106	91	75	0,026
615 000 45	45	52	10,0	8,6	364	16,2	108	98	110	0,045
615 000 48	48	55	10,0	8,6	589	24	160	139	110	0,043
615 000 50	50	57	10,0	8,6	608	25	152	131	110	0,045
615 000 55	55	62	10,0	8,6	700	25	146	130	120	0,049
615 000 60	60	68	12,0	10,4	830	28	120	106	160	0,07
615 000 65	65	73	12,0	10,4	970	30	117	102	170	0,09
615 000 70	70	79	14,0	12,2	1310	37	119	105	210	0,12
615 000 75	75	84	14,0	12,2	1440	39	114	99	230	0,12
615 000 80	80	91	17,0	15,0	2160	54	123	103	300	0,21
615 000 85	85	96	17,0	15,0	2450	58	122	107	320	0,21
615 000 90	90	101	17,0	15,0	2700	60	119	104	330	0,22
615 000 95	95	106	17,0	15,0	2900	61	114	105	340	0,23
615 001 00	100	114	21,0	18,7	4160	83	119	104	460	0,39
615 001 10	110	124	21,0	18,7	5000	91	116	102	475	0,42
615 001 20	120	134	21,0	18,7	6170	103	122	107	475	0,46

More sizes up to d=500mm for 270,000Nm are available.
Price and delivery time on request.

Several sets in line

Several sets can be mounted in line. T and F_A shown in the table are for one set.

At 2 sets: $T_{ges.}$ = T x 1,6.

At 3 sets: $T_{ges.}$ = T x 1,9.

At 4 sets: $T_{ges.}$ = T x 2,1.

Calculation the screws

The screw size can be chosen. The number of screws must be calculated.

Number of screws = $F_{A\ ges.}$: F_S

$F_{A\ ges.}$ = Number of sets x F_A

F_A see data table above.

F_S see data table on the right.

Axial Screw Force F_S and Fastening torque

	Axial Screw Force F_S in kN			Fastening Torque T_A in Nm		
Screw	**8.8**	**10.9**	**12.9**	**8.8**	**10.9**	**12.9**
M4	3,9	5,8	6,7	3,0	4,4	5,1
M5	6,4	9,4	11,0	5,9	8,7	10
M6	9,0	12,2	15,5	10	15	18
M8	16,5	24,3	28,4	25	36	43
M10	26,3	38,7	42,2	49	72	84
M12	38,4	56,5	66,0	85	125	145
M14	52,5	77,5	90,5	135	200	235

Fit

Shaft h8, Hub H8.
Surface roughness max. 12.5µm.

T = transmittable torque.
F_{ax} = transmittable axial force.
P_W = surface pressure onto the shaft.
P_N = surface pressure onto the hub.
F_A = required axial preload force.

Mounting

Slightly oil the locking assembly before mounting, do not use molybdenum disulphide or grease. Tighten the screws evenly and crosswise in several steps.

Demounting

Remove all tensioning screws. Then, due to the cone angle, the locking assembly is usually released. If not, use a wheel puller or use carefully a rubber hammer to loosen the wheel from the clamping rings.

Clamping Bushes E and E-N

Material E: High-quality steel.
Material E-N: Stainless steel 1.405.

The clamping bush consists of a double-walled steel sleeve filled with a pressure medium, and a flange part. Inside the flange there is a screw and a piston with seal to build up compression.

Function: When the thrust screw is tightened, the sleeve expands uniformly against shaft and hub, creating a rigid connection through frictional force. When the thrust screw is loosened, the bush returns to its initial position and can be easily disassembled.

Concentricity: 0.02 mm.

Tolerances: Shaft h7 for d = 15 mm.
Shaft k6-h7 for d = 19, 22, 24, 28 and 38 mm.
Shaft h8 for the other diameters d.
Hub H7.

Temperature range: -30 °C to 85 °C.

Ordering Details: e.g.: Product No. 615 915 00, Clamping Bush E, 15 mm

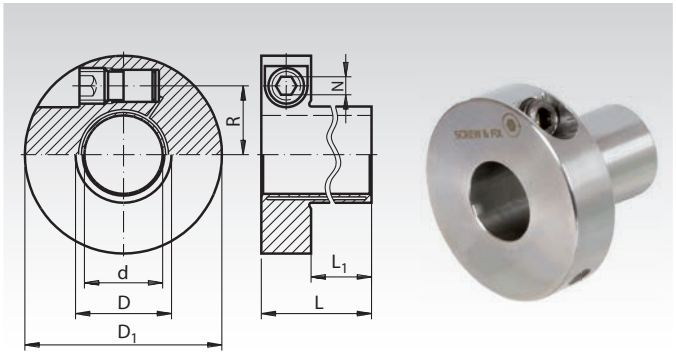

$P_W \approx 90 N/mm^2$
$P_N \approx 70 N/mm^2$

Product No. Design E Steel	Dimensions d mm	D mm	D_1 mm	L mm	L_1 mm	at T_A transmittable Torque T Nm	Axial Force F_{ax} kN	Radial Force F_r kN	Screw 12.9* Size DIN 915	R mm	N mm	T_A Nm	Moment of Inertia J $kgm^2 \cdot 10^{-3}$	Weight kg
615 915 00	15	18	46	39	25	46	6,1	0,5	M10	15,1	5	5	0,043	0,16
615 915 87	15,88	19	47	40	26	53	6,7	0,5	M10	15,6	5	5	0,047	0,17
615 919 00	19	23	50,5	42	28	85	8,9	1	M10	17,4	5	5	0,064	0,20
615 919 05	19,05	23	50,5	42	28	85	8,9	1	M10	17,4	5	5	0,064	0,20
615 920 00	20	24	51,5	44	30	110	11	1	M10	18	5	5	0,070	0,21
615 922 00	22	27	55,5	46	32	130	11	1,2	M10	19,3	5	5	0,097	0,25
615 924 00	24	29	57,5	47	33	190	15	1,4	M10	20,3	5	5	0,112	0,27
615 925 00	25	30	58	49	35	230	18	1,5	M10	20,8	5	5	0,117	0,27
615 925 40	25,4	31	59	49	35	190	15	1,5	M10	21,2	5	5	0,127	0,29
615 928 00	28	34	63	52	38	280	20	1,8	M10	22,6	5	5	0,170	0,34
615 930 00	30	36	64,5	54	40	380	25	2	M10	23,6	5	5	0,189	0,35
615 931 75	31,75	39	68,5	56	42	430	27	2,2	M10	24,8	5	5	0,249	0,42
615 932 00	32	39	68,5	56	42	440	27	2,2	M10	24,8	5	5	0,249	0,42
615 935 00	35	42	73	59	45	640	36	2,5	M10	26,4	5	5	0,325	0,48
615 938 00	38	46	84,5	72	52	890	46	2,8	M16	31	8	21	0,761	0,84
615 940 00	40	48	86,5	75	55	1100	55	3	M16	32	8	21	0,844	0,88
615 945 00	45	54	93	78	58	1400	62	3,5	M16	34,8	8	21	1,170	1,05
615 948 00	48	59	97	79	59	1700	57	4	M16	36,8	8	21	1,460	1,21
615 950 00	50	60	98,5	80	60	1900	76	4,5	M16	37,5	8	21	1,524	1,20
615 960 00	60	73	115,5	90	70	3300	90	5,3	M16	43,3	8	21	3,171	1,85

Product No. Design E-N Stainless	Dimensions d mm	D mm	D_1 mm	L mm	L_1 mm	at T_A transmittable Torque T Nm	Axial Force F_{ax} kN	Radial Force F_r kN	Screw A4* Size DIN 915	R mm	N mm	T_A Nm	Moment of Inertia J $kgm^2 \cdot 10^{-3}$	Weight kg
615 999 15	15	18	46	39	25	46	6,1	0,5	M10	15,1	5	5	0,043	0,16
615 999 20	20	24	51,5	44	30	110	11	1	M10	18	5	5	0,070	0,21
615 999 25	25	30	58	49	35	230	18	1,5	M10	20,8	5	5	0,117	0,27
615 999 30	30	36	64,5	54	40	380	25	2	M10	23,6	5	5	0,189	0,35
615 999 35	35	42	73	59	45	640	36	2,5	M10	26,4	5	5	0,325	0,48
615 999 40	40	48	86,5	75	55	1100	55	3	M16	32	8	21	0,844	0,88
615 999 45	45	54	93	78	58	1400	62	3,5	M16	34,8	8	21	1,170	1,05
615 999 50	50	60	98,5	80	60	1900	76	4,5	M16	37,5	8	21	1,524	1,20

T = transmittable torque at axial force of 0, if the screws are fastened with T_A.
F_{ax} = transmittable axial force at torque of 0, if the screws are fastened with T_A.
F_r = maximum transmittable radial force.
T_A = required fastening torque for the screws.
* With coated thread.

Properties

The unique hydraulic principle leads to many advantages:

- very fast mounting/demounting with only **one thrust screw.**
- radial fastening of the thrust screw allows space saving installation conditions.
- very small assembly dimensions.
- good concentricity, even after several mountings.

Dimensioning

For the maximum torque, the shaft must be strong enough (min. strength 350 N/mm², for example C45).
The hub diameter must be big enough.
Recommend minimum hub diameter:
Hub from Steel: ND = 1,4 x D.
Hub from grey cast iron: ND = 2,0 x D.
Hub from Aluminium: ND = 2,5 x D.

Mounting

Before mounting always check whether the threads are lubricated (OKS 260 or Molykote D).

Clamping Bushes MSA

Material: Steel.

- For fixing a hub (e.g. drive wheel, rotor or similar) on a shaft.
- For medium high torques and axial forces.
- Minimal space requirement.
- Self-centering.
- Not self-locking.
- Little axial movement during mounting.

Concentricity: approx. 0.02 mm.

Tolerance: Shaft h11 up to k6, Hub H7 up to H11.

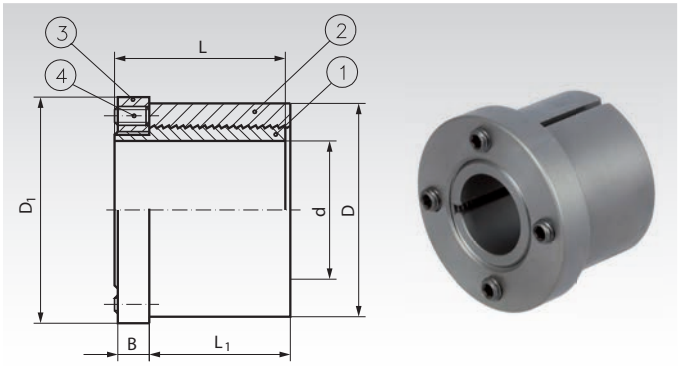

Ordering Details: e.g.: Product No. 615 019 00, Locking Assembly MSA, Slotted, 19 mm

Product No.	d mm	D mm	D_1 mm	L mm	L_1 mm	B mm	T Nm	F_{ax} kN	P_N N/mm²	Screws Number x Size	T_A Nm	Weight kg
615 019 00	19	42	49	36	27	9,5	170	18	42	4 M6 x 12	8	0,33
615 020 00	20	42	49	36	27	9,5	180	18	42	4 M6 x 12	8	0,32
615 022 00	22	42	49	36	27	9,5	200	18	42	4 M6 x 12	8	0,31
615 024 00	24	46	53	37	27	10,5	325	27	58	6 M6 x 12	8	0,37
615 025 00	25	46	53	37	27	10,5	340	27	58	6 M6 x 12	8	0,36
615 028 00	28	55	63	44	32	12,5	490	35	66	4 M8 x 16	18	0,64
615 030 00	30	55	63	44	32	12,5	525	35	66	4 M8 x 16	18	0,61
615 032 00	32	60	67	49	37	12,5	650	41	60	5 M8 x 16	18	0,81
615 035 00	35	60	67	49	37	12,5	720	41	61	5 M8 x 16	18	0,75
615 038 00	38	67	75	57	45	12,5	950	50	54	6 M8 x 16	18	1,13
615 040 00	40	67	75	57	45	12,5	1000	50	54	6 M8 x 16	18	1,06
615 042 00	42	67	75	57	45	12,5	1050	50	54	6 M8 x 16	18	1,01
615 045 00	45	70	77	63	50	13,5	1280	57	53	7 M8 x 16	18	1,17
615 048 00	48	77	83	68,8	55	14	1560	65	50	8 M8 x 16	18	1,62
615 050 00	50	77	83	68,5	55	14	1625	65	50	8 M8 x 16	18	1,53

T = transmittable torque at F_{ax} = 0.
F_{ax} = transmittable axial force at T = 0.
P_N = surface pressure onto the hub.
T_A = fastening torque of the screws.

Operating factor f_B for various operating conditions

The values for the maximum transmittable torque and the maximum permissible axial force for the clamping bush at static load are stated in the table below. With dynamic load these values have to be reduced, i.e. divided by the operating factors listed in the adjoining table.

Drive Unit	Type of Load		
	Uniform Load	Moderate Shock	Strong Shock
Electric motors, turbines	1 - 1.25	1.25 - 1.5	1.5 - 1.75
Multi-cylinder piston engines	1.25 - 1.5	1.5 - 1.75	1.75 - 2
One-cylinder piston engines	1.75 - 2	2 - 2.25	2.25 - 3

Description

Mechanical, all-steel clamping elements, containing no hydraulic pressure medium. Both inner part (1) and outer part (2) have a cylindrical buttress thread with a lengthwise slot. The inner ring (3) connected to the inner part has threaded studs (4), that create a tensioning effect when tightened.The bushes are designed for very high loads in radial as well as in axial direction. If a clamping bush without slot on the outside part is to be welded onto a workpiece, we would ask you to contact us first. Feather key grooves in the shaft do not cause any problems; simply remove the frictional corrosion.

Dimensioning

For the maximum torque, the shaft must be strong enough (min. strength 350 N/mm², for example C45).
The hub diameter must be big enough.
Recommend minimum hub diameter:
Hub from Steel: ND = 1,4 x D.
Hub from grey cast iron: ND = 2,0 x D.
Hub from Aluminium: ND = 2,5 x D.

Clamping Bushes MSD

Material: Steel.

The MSD clamping bush consists of a double-walled, hardened steel sleeve filled with a special pressure medium, a seal, a piston, a compression flange and fastening screws. When tightening the screws, the sleeves expand evenly against shaft and hub, creating a rigid connection. When the screws are loosened, the bush returns to its initial position and can be easily demounted.

Temperature range: -30 °C to 85 °C.
Concentricity: ≈ 0.03 - 0.06 mm.
Tolerance: Shaft h8 - k6 (for Prod. No. 615 215 00 only h7), Hub H7.

$P_W \approx 90 N/mm^2$ $P_N \approx 70 N/mm^2$

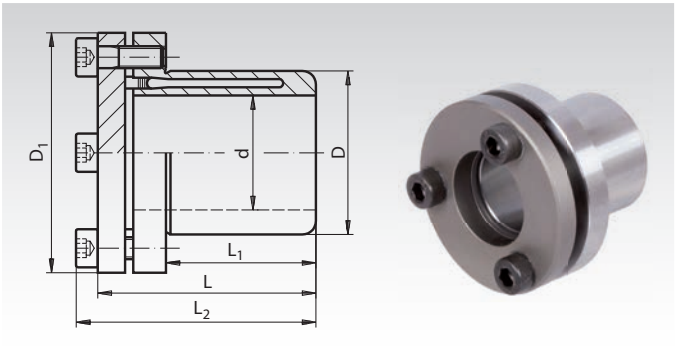

Ordering Details: e.g.: Product No. 615 215 00, Clamping Bush MSD, 15 mm

Product No.	Dimensions d mm	D mm	D_1 mm	L mm	L_1 mm	L_2	at T_A transmittable Torque T Nm	Force F_{ax} kN	Screws DIN 912, 12.9 Amount	Size	T_A Nm	Moment of Inertia J $kgm^2 \cdot 10^{-3}$	Weight kg
615 215 00	15	23	38	30	17	35	55	7,3	3	M5	6	0,018	0,10
615 219 00	19	28	45	37	21	42	100	10,6	3	M5	8	0,046	0,17
615 220 00	20	28	45	37	22	42	125	12,5	3	M5	8	0,046	0,16
615 222 00	22	32	49	37	22	42	135	12,3	4	M5	8	0,065	0,19
615 224 00	24	34	49	40	25	45	200	16,7	4	M5	8	0,067	0,20
615 225 00	25	34	49	43	27	48	250	20,0	4	M5	8	0,071	0,19
615 228 00	28	39	55	45	29	50	300	21,4	4	M5	8	0,120	0,26
615 230 00	30	41	57	47	32	52	420	28,0	4	M5	8	0,142	0,29
615 232 00	32	43	60	52	34	57	420	26,3	4	M5	8	0,195	0,35
615 235 00	35	47	63	55	37	60	650	37,1	6	M5	8	0,250	0,40
615 238 00	38	50	65	59	41	64	750	39,5	6	M5	8	0,310	0,43
615 240 00	40	53	70	63	43	68	940	47,0	6	M5	8	0,441	0,55
615 242 00	42	55	70	65	45	70	940	44,8	6	M5	8	0,467	0,55
615 245 00	45	59	77	69	49	75	1290	57,3	6	M6	13	0,686	0,71
615 248 00	48	62	80	73	52	79	1570	65,4	6	M6	13	0,833	0,78
615 250 00	50	65	83	76	53	82	1900	76,0	6	M6	13	1,045	0,86

T = transmittable torque at axial force of 0, if the screws are fastened with T_A.
F_{ax} = transmittable axial force at torque of 0, if the screws are fastened with T_A.
T_A = required fastening torque for the screws.

The dimensions refer to bushes before assembly.

Mounting

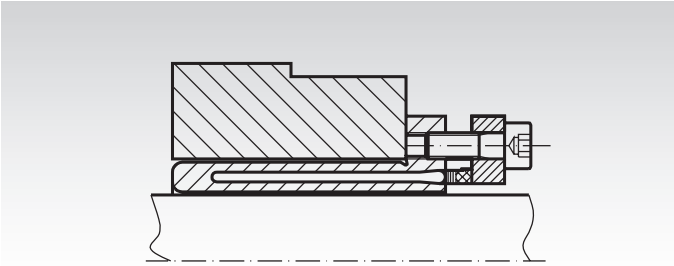

For mounting, the clamping bush MSD is placed between shaft and hub.

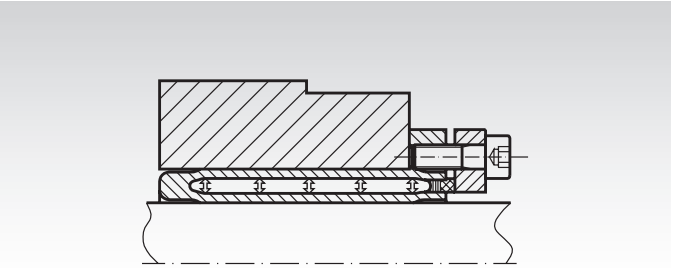

After the screws have been tightened, there is a contact between the surface of hub and shaft.

Advantages

The hydraulic principle leads to many advantages:
- fast mounting/demounting.
- sensitive adjustment of the hub can be carried out during assembly.
- low fastening torque and few screws allow very simple assembly.
- good concentricity.
- small dimensions allow little outside diameter of the hub.
- The clamping bushes are as standard equipped with Allen screws, but hexagon-head screws can also be supplied.

Dimensioning

For the maximum torque, the shaft must be strong enough (min. strength 350 N/mm^2, for example C45).
The hub diameter must be big enough.
Recommend minimum hub diameter:
Hub from Steel: ND = 1,4 x D.
Hub from grey cast iron: ND = 2,0 x D.
Hub from Aluminium: ND = 2,5 x D.

Clamping Bushes MSD-N

Material: Stainless steel 1.4021.

The MSD-N clamping bush is identical with the MSD bush, but is made from stainless steel. It has been used in many industries for years, as, e.g., the food, medical, automotive, chemical, printing and process engineering industries.

Concentricity 0.03 - 0.06 mm.

Tolerance: Shaft h9 (Ø 15 mm only h8), Hub H7.

Temperature range: -30 °C to 85 °C.

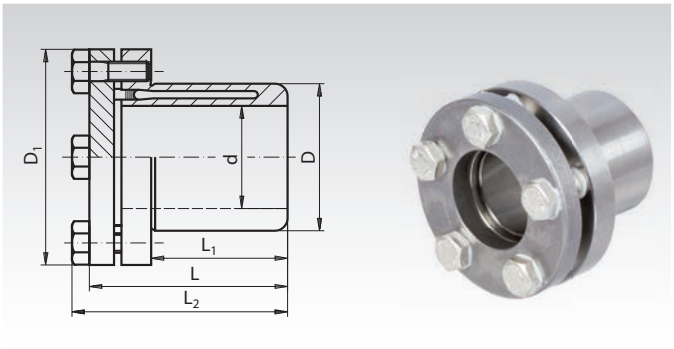

$P_W \approx 90 N/mm^2$ $P_N \approx 70 N/mm^2$

Ordering Details: e.g.: Product No. 615 993 15, Clamping Bush MSD-N, 15 mm

Product No.	Dimensions d mm	D mm	D_1 mm	L mm	L_1 mm	L_2 mm	at T_A transmittable Torque T Nm	Force F_{ax} kN	Screws DIN 933, A4 Amount	Size	T_A Nm	Moment of Inertia J $kgm^2 \cdot 10^{-3}$	Weight kg
615 993 15	15	23	38	30	17	34	45	6	4	M 5	4,5	0,018	0,10
615 993 20	20	28	45	37	22	41	100	10	5	M 5	4,5	0,046	0,16
615 993 25	25	34	49	43	27	46	210	16,8	7	M 5	4,5	0,071	0,19
615 993 30	30	41	57	47	32	51	350	23,3	7	M 5	4,5	0,142	0,29
615 993 40	40	53	70	63	43	67	750	37,5	9	M 5	4,5	0,441	0,55
615 993 50	50	65	83	76	53	80	1550	62	9	M 6	7,8	1,045	0,86

T = transmittable torque at axial force of 0, if the screws are fastened with T_A.
F_{ax} = transmittable axial force at torque of 0, if the screws are fastened with T_A.
T_A = required fastening torque for the screws.
The dimensions refer to bushes before assembly.

Miniature Clamping Bushes MSM and MSM-N

Material: Version MSM: Mild steel.
Version MSM-N: Stainless steel 1.4305.

Concentricity: about 0.02 mm.
Tolerance: Shaft k6-h10, Hub H8.

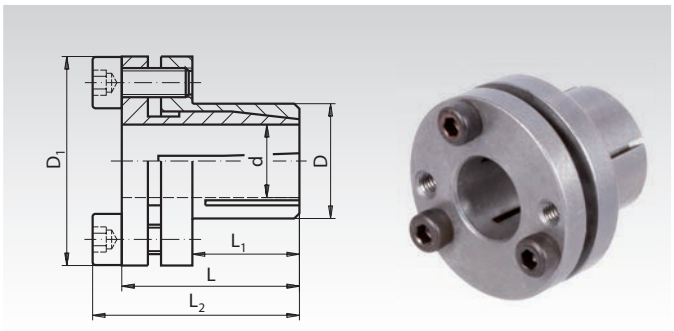

$P_W \approx 90 N/mm^2$ $P_N \approx 70 N/mm^2$

Ordering Details: e.g.: Product No. 615 206 00, Miniature Clamping Bush MSM, 6 mm

Product No.	Dimensions d mm	D mm	D_1 mm	L mm	L_1 mm	L_2	at T_A transmittable Torque T Nm	Force F_{ax} kN	Screws DIN 912, 12.9 Amount	Size	T_A Nm	Moment of Inertia J $kgm^2 \cdot 10^{-3}$	Weight kg
615 206 00	6	14	25	19	10	22	7	2,5	2	M3 x 8	2	2,1	0,03
615 208 00	8	15	27	21,5	12	25,5	20	5	2	M4 x 8	4	3,3	0,04
615 209 00	9	16	28	24	14	28	28	6,5	2	M4 x 8	4	4,4	0,05
615 210 00	10	16	28	24	14	28	34	6,5	2	M4 x 8	4	4,3	0,05
615 211 00	11	18	30	25,5	14	29,5	36	6,5	2	M4 x 10	4	6,2	0,06
615 212 00	12	18	30	25,5	14	29,5	40	6,5	2	M4 x 10	4	6,1	0,06
615 214 00	14	22	35	27,5	15	31,5	66	9,5	3	M4 x 10		13,2	0,08
MSM-N Stainless									Screws DIN 912, A4				
615 992 06	6	14	25	19	10	22	5	1,7	3	M3 x 8	1,2	2,1	0,03
615 992 08	8	15	27	21,5	12	25,5	17	4,4	3	M4 x 8	2,7	3,3	0,04
615 992 10	10	16	28	24	14	28	23	4,4	3	M4 x 8	2,7	4,4	0,05
615 992 12	12	18	30	25,5	14	29,5	27	4,4	3	M4 x 10	2,7	6,1	0,06
615 992 14	14	22	35	27,5	15	31,5	48	6,5	4	M4 x 12	2,7	13,2	0,08

T = transmittable torque at axial force of 0, if the screws are fastened with T_A.
F_{ax} = transmittable axial force at torque of 0, if the screws are fastened with T_A.
T_A = required fastening torque for the screws.
The dimensions refer to bushes before assembly.

Mounting

The bush is mounted quickly. Just place the bush inside the hub and push both onto the shaft. Fasten with a torque wrench.

Demounting

Remove tensioning screws. Put screws in forcing thread and fasten them until the bush is pressed off.

Locking Assemblies SIG

Material: Stainless steel 1.4301.

- For fixing a hub (e.g. drive wheel, rotor or similar) on a shaft.
- For lower torques.
- Minimal space requirement.
- The connection can be disassembled with a puller.

Required tolerances: Shaft: h8.
Bore of the part to be clamped: H8.
Surface roughness max. 12.5µm.

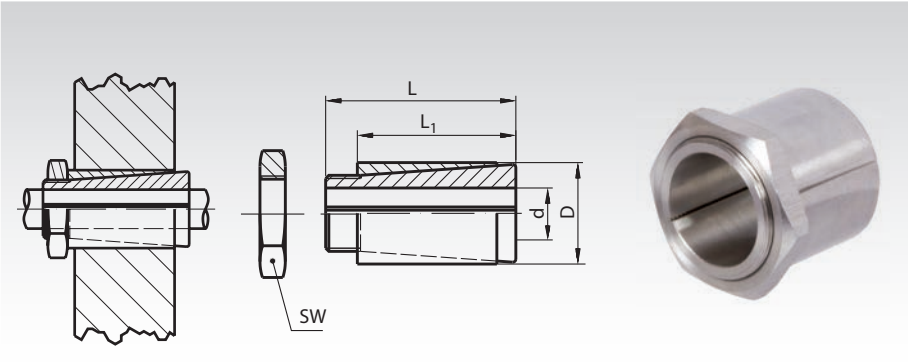

Ordering Details: e.g.: Product No. 615 104 00, Locking Assembly SIG, 4 mm

Product No.	d mm	D mm	L mm	L_1 mm	Torque T Nm	Thread	SW mm	Fastening Torque T_A Nm	Weight g
615 104 00	4	8	15	12,5	3	M6x0,5	8	4	3,8
615 105 00	5	10	15	12,5	4	M8x0,5	10	5	6,5
615 106 00	6	10	15	12,5	7	M8x0,5	10	8	5,3
615 106 35	6,35	10	15	12,5	7	M8x0,5	10	8	5,0
615 107 00	7	12	15	12,0	8	M10x0,75	12	9	6,3
615 108 00	8	14	22	19,0	14	M12x1	16	15	17,5
615 109 00	9	14	22	19,0	14	M12x1	16	15	15,0
615 109 52	9,52	14	22	19,0	14	M12x1	16	15	12,8
615 110 00	10	17	22	18,5	18	M15x1	18	19	29,0
615 111 00	11	17	22	18,5	18	M15x1	18	19	28,0
615 112 00	12	17	22	18,5	18	M15x1	18	19	26,2
615 114 00	14	20	28	23,0	24	M17x1	20	25	35,3
615 115 00	15	20	28	23,0	24	M17x1	20	25	36,4
615 115 88	15,88	23	28	23,0	26	M20x1	26	27	48,4
615 116 00	16	23	28	23,0	26	M20x1	26	27	50,7
615 117 00	17	23	28	23,0	26	M20x1	26	27	45,0
615 119 00	19	25	28	23,0	29	M22x1	27	30	46,9
615 120 00	20	28	28	23,0	31	M25x1	30	32	67
615 125 00	25	32	35	27	45	M28x1	34	42	89
615 130 00	30	37	35	27	52	M33x1	38	47	105
615 135 00	35	43	40	29	63	M39x1,25	48	57	179
615 140 00	40	50	40	29	105	M45x1,25	55	64	249

Dimensioning

For the maximum torque, the shaft must be strong enough (min. strength 350 N/mm², for example C45).
The hub diameter must be big enough.
Recommend minimum hub diameter:
Hub from Steel: ND = 1,4 x D.
Hub from grey cast iron: ND = 2,0 x D.
Hub from Aluminium: ND = 2,5 x D.

Mounting

- The locking assembly has to be mounted without lubrication to achieve the torques stated above.
- The locking assembly has to be fully in contact with the shaft.
- The locking assembly must not get in contact with any fixed components (e.g. bearing housing or crankcase).
- Tighten the nut with a torque wrench to the torque value as per the table.

Hub Calculation and Selection Tool
on the Internet at **www.maedler.de**
in the section **MÄDLER®-Tools**

Locking Assemblies SSG

Material: Steel.

- For fixing a hub (e.g. drive wheel, rotor or similar) on a shaft.
- For low to medium torques.
- Also suitable for small hub diameters.
- Self-centering.
- Self-locking.
- Axial movement during mounting.

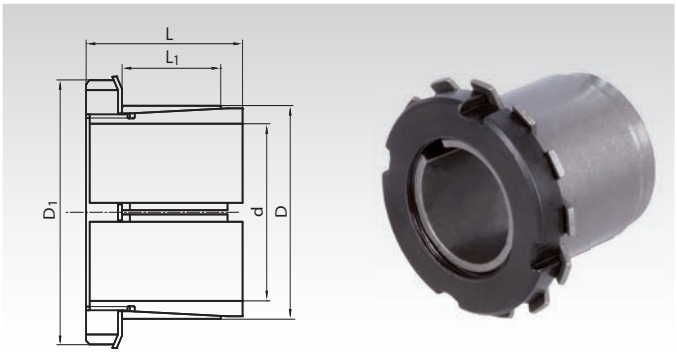

Ordering Details: e.g.: Product No. 615 200 14, Locking Assembly SSG, 14 mm

Product No.	d mm	D mm	L mm	L_1 mm	D_1 mm	T Nm	F_{ax} kN	P_W N/mm²	P_N N/mm²	Nut 8.8 Thread	T_A Nm	Weight kg
615 200 14	14	25	30	20	32	61	9	81	43	M20x1	95	0,08
615 200 15	15	25	30	20	32	72	9	82	46	M20x1	95	0,08
615 200 16	16	25	30	20	32	73	9	75	45	M20x1	95	0,07
615 200 17	17	25	32	20	32	82	9	72	46	M20x1	95	0,09
615 200 18	18	30	32	20	38	98	10	78	44	M25x1,5	160	0,12
615 200 19	19	30	32	20	38	102	11	73	44	M25x1,5	160	0,12
615 200 20	20	30	32	20	38	110	11	69	44	M25x1,5	160	0,11
615 200 22	22	35	36	25	45	165	13	71	45	M30x1,5	220	0,18
615 200 24	24	35	36	25	45	178	14	65	45	M30x1,5	220	0,16
615 200 25	25	35	36	25	45	178	14	58	43	M30x1,5	220	0,19
615 200 28	28	40	42	30	52	248	17	54	40	M35x1,5	340	0,24
615 200 30	30	40	42	30	52	273	17	51	40	M35x1,5	340	0,24
615 200 32	32	45	44	30	58	347	21	59	45	M40x1,5	480	0,32
615 200 35	35	45	44	30	58	406	22	57	47	M40x1,5	480	0,32
615 200 38	38	50	45	30	65	510	25	62	46	M45x1,5	680	0,35
615 200 40	40	50	45	30	65	520	27	54	44	M45x1,5	680	0,33
615 200 42	42	55	46	30	70	650	29	68	52	M50x1,5	870	0,43
615 200 45	45	55	46	30	70	660	31	57	48	M50x1,5	870	0,40
615 200 48	48	60	46	30	75	810	34	58	48	M55x2	970	0,45
615 200 50	50	60	46	30	75	850	34	58	49	M55x2	970	0,40
615 200 55	55	65	46	30	80	1020	37	59	50	M60x2	1100	0,44
615 200 60	60	70	48	30	85	1290	43	62	52	M65x2	1300	0,55

T = transmittable torque at F_{ax} = 0.
F_{ax} = transmittable axial force at T = 0.
P_W = surface pressure onto the shaft.
P_N = surface pressure onto the hub.
T_A = fastening torque of slotted nut.

Fit

Shaft h8, Hub H8.
Surface roughness max. 12.5µm.

Mounting

Slightly oil the locking assembly before mounting, do not use molibdenum disulphide or grease. Tighten the slotted nut and bend the lock washer.

Demounting

Re-bend the lock washer. Remove the nut. Then, due to the cone angle, the locking assembly is usually released. If not, use a wheel puller or use carefully a rubber hammer to loosen the wheel from the clamping rings.

Locking Assemblies TT 5-16 mm

Material: Steel.

- For fixing a hub (e.g. drive wheel, rotor or similar) on a shaft.
- For high torques.
- Self-centering.
- Axial offset during mounting (can be compensated by correct positioning).

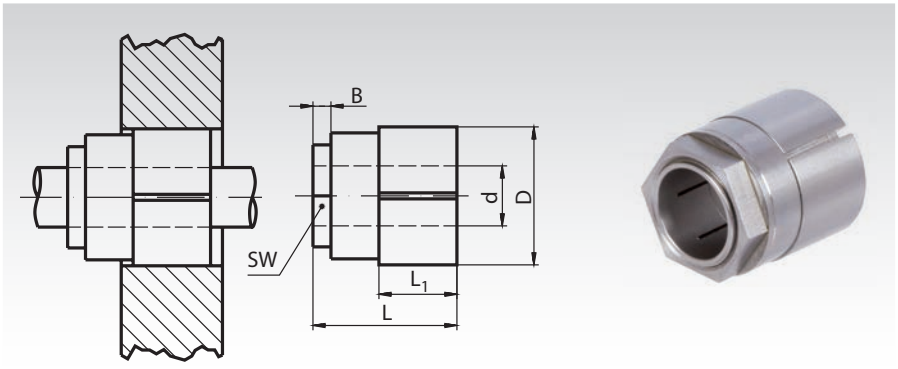

Ordering Details: e.g.: Product No. 615 501 05, Locking Assembly TT, 5 mm

Product No.	d mm	D mm	L mm	L_1 mm	B mm	Torque T max. Nm	Axial force max. kN	Surface pressure on the hub N/mm²	Diameter across flats SW mm	Tightening Torque T_A Nm	Weight g
615 501 05	5	16	19	10	3	11	4	73	13	10	19
615 501 06	6	16	19	10	3	13	4	73	13	10	18
615 501 07	7	20	22	11	3	35	10	119	16	28	34
615 501 08	8	20	22	11	3	40	10	119	16	28	33
615 501 09	9	20	22	11	3	45	10	119	16	28	32
615 501 10	10	23	26	13	5	65	13	116	19	44	49
615 501 11	11	23	26	13	5	72	13	116	19	44	47
615 501 12	12	23	26	13	5	79	13	116	19	44	45
615 501 14	14	26	29	16	5	118	17	107	22	66	65
615 501 15	15	26	29	16	5	126	17	107	22	66	62
615 501 16	16	26	29	16	5	135	17	107	22	66	59

Locking Assemblies TT 17-35 mm

Material: Steel.

- For fixing a hub (e.g. drive wheel, rotor or similar) on a shaft.
- For high torques.
- Self-centering.
- Axial offset during mounting (can be compensated by correct positioning).

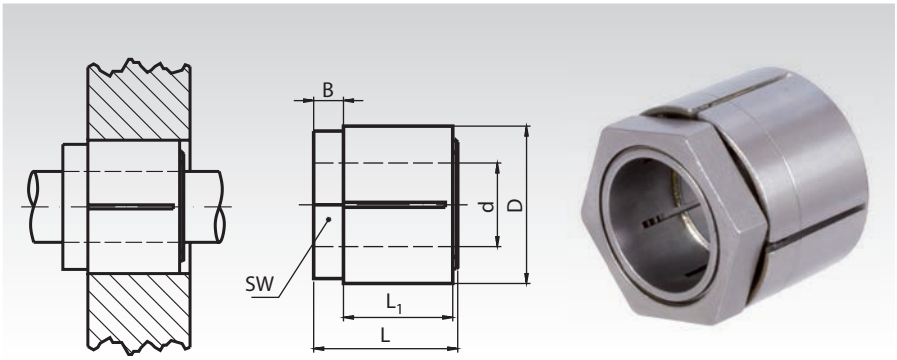

Ordering Details: e.g.: Product No. 615 501 17, Locking Assembly TT, 17 mm

Product No.	d mm	D mm	L mm	L_1 mm	B mm	Torque T max. Nm	Axial force max. kN	Surface pressure on the hub N/mm²	Diameter across flats SW mm	Tightening Torque T_A Nm	Weight g
615 501 17	17	32	30	22	6	208	25	92	30	110	119
615 501 18	18	32	30	22	6	221	25	92	30	110	114
615 501 19	19	32	30	22	6	233	25	92	30	110	109
615 501 20	20	35	33	24	7	298	30	94	32	150	144
615 501 22	22	35	33	24	7	328	30	94	32	150	132
615 501 24	24	38	35	25	8	398	33	93	36	185	166
615 501 25	25	38	35	25	8	415	33	93	36	185	159
615 501 28	28	45	41	29	11	505	36	73	46	300	293
615 501 30	30	45	41	29	11	541	36	73	46	300	272
615 501 32	32	50	44	30	12	590	37	65	50	265	377
615 501 35	35	50	44	30	12	645	37	65	50	265	340

Fit, Surfaces

Size 5 to 16: Shaft and hub ±0.04mm.
Size 17 to 35: Shaft and hub ±0.08mm.

Mounting

It is essential to degrease the shaft and hub.
Install the locking assembly as delivered, never lubricate it.
Tighten the nut with a torque wrench to the torque value as per the table.

Shrink Disks ST

Material: 42CrMo4 quenched.

- For very high torques.
- No axial shaft-hub movement.
- Quick mounting.
- Quick demounting.

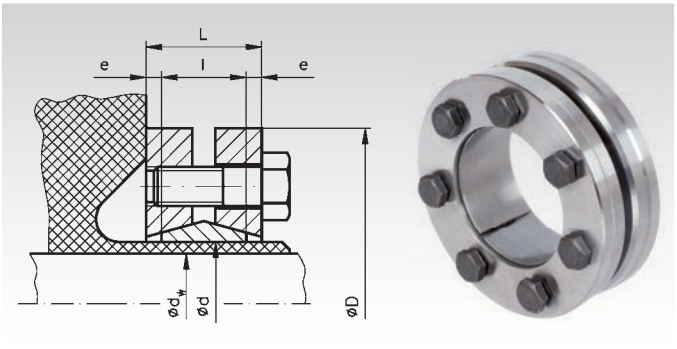

Ordering Details: e.g.: Product No. 615 814 00, Shrink Disk Inner-Ø 14 mm

Product No.	Inner-Ø d mm	Shaft-Ø[1] d_w mm	Torque[2] T Nm	Axial Load[2] F_{ax} kN	D mm	l mm	L mm	e mm	Screws DIN 931 No. x Size	Fastening Torque T_A Nm	Contact-pressure P_N N/mm²	Weight kg
615 814 00	14	10	39	10	38	10	15	2,5	4x M5	3	343	0,1
		11	51	12								
		12	63	14								
615 816 00	16	12	66	14	41	12	17	2,5	4x M5	3	313	0,1
		13	78	16								
		14	96	18								
615 818 00	18	14	83	16	44	12	17	2,5	4x M5	4	298	0,1
		15	102	18								
		16	132	20								
615 824 00	24	19	220	32	50	15	21	3	6x M5	5	357	0,2
		20	272	35								
		21	325	37								
615 830 00	30	24	390	38	60	18	23	2,5	7x M5	5	292	0,3
		25	435	41								
		26	465	43								
615 836 00	36	28	442	50	72	19	25	3	5x M6	12	307	0,4
		30	575	58								
		31	633	58								
615 838 00	38	29	660	62	72	21	27	3	6x M6	12	341	0,5
		30	720	65								
		31	750	64								
615 844 00	44	32	740	62	80	22	26	2	7x M6	12	283	0,6
		35	940	72								
		36	1010	75								
615 850 00	50	38	1275	89	90	22	30	4	9x M6	12	320	0,8
		40	1430	96								
		42	1635	103								
615 855 00	55	42	1170	79	100	23	31	4	8x M6	12	250	1,1
		45	1500	88								
		48	1870	97								
615 862 00	62	48	2220	125	110	23	32	4,5	12x M6	12	330	1,3
		50	2600	132								
		52	2900	135								
615 868 00	68	50	2010	97	115	23	33	5	10x M6	12	260	1,4
		55	2505	106								
		60	3140	120								
615 875 00	75	55	2515	119	138	25	33	4	7x M8	30	272	2,4
		60	3195	137								
		65	3940	155								

[1] Shaft-Ø of the customer's machine (for example). [2] Transmittable values with shaft-Ø d_w of the customer's machine.

More sizes up to inner-Ø d=300mm, for shaft diameter 240mm and 292,000Nm are available.
Price and delivery time on request.

Mounting

Clean and slightly lubricate the contact surfaces of shaft and hub. Place clamping set on the hub. Fasten the tensioning screws evenly, step by step until the fastening torque T_A of the table is reached. To reach the value stated in the table several fastening steps are required. The figures for T and F_{ax} stated in the table were calculated for an assembly with oil.

Attention: Do not use any lubricant containing molybdenum sulphide.

Demounting: Evenly unscrew all tensioning screws one by one. Do not fully remove the screws from the thread. The clamping element usually disengages on its own.

Tolerances, Surface Roughness

One good turn is sufficient.
Highest permissible surface roughness: R_t=12.5µm.

Tolerances for d_w/d: h8/H8.

Shrink Disks ST-B

Material: Steel.

- For high torques.
- No axial shaft-hub movement.
- Quick mounting.
- Quick demounting.

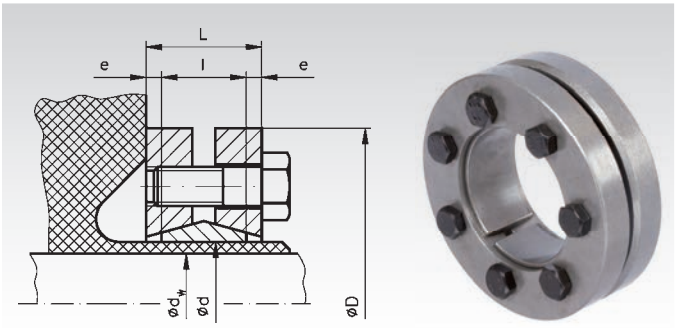

Ordering Details: e.g.: Product No. 615 870 14, Shrink Disk ST-B, Inner-Ø 14 mm

Product No.	Inner-Ø d mm	Shaft-Ø[1] d_w mm	Torque[2] T Nm	Axial Load[2] F_{ax} kN	D mm	l mm	L mm	e mm	Screws DIN 931 No. x Size	Fastening Torque T_A Nm	Contact-pressure P_N N/mm²	Weight kg
615 870 14	14	11	30	6,3	38	7	11	2	4x M5	4	193	0,10
		12	50	9,2							179	
615 870 16	16	13	70	10	41	11	15	2	5x M5	4	133	0,10
		14	90	13							131	
615 870 24	24	19	170	26	50	14	19,5	2,75	6x M5	4	292	0,21
		20	200	26							272	
		21	240	28							277	
615 870 30	30	24	300	29	60	16	21,5	2,75	7x M5	4	231	0,32
		25	340	31							235	
		26	370	32							226	
615 870 36	36	28	440	50	72	18	23,5	2,75	5x M6	12	307	0,48
		30	550	56							295	
		31	610	60							319	
615 870 44	44	32	660	63	80	20	25,5	2,75	7x M6	12	314	0,64
		35	800	75							323	
		36	830	75							307	
615 870 50	50	38	980	78	90	22	27,5	2,75	8x M6	12	301	0,80
		40	1110	82							277	
		42	1150	83							292	
615 870 55	55	42	1390	90	100	23	30,5	3,75	8x M6	12	249	1,15
		45	1550	93							257	
		48	1880	94							252	
615 870 62	62	48	1900	97	110	23	30,5	3,75	10x M6	12	293	1,30
		50	1940	105							290	
		52	2300	110							265	
615 870 68	68	50	2300	111	115	23	30,5	3,75	10x M6	12	247	1,32
		55	2600	115							265	
		60	2600	115							245	
615 870 75	75	55	3020	123	138	25	32,5	3,75	7x M8	30	284	1,70
		60	3070	124							262	
		65	3170	132							270	
615 870 80	80	60	3910	141	145	25	32,5	3,75	7x M8	30	253	1,90
		65	3940	153							259	
		70	4600	160							259	
615 870 85	85	65	4650	165	155	30	39	4,5	10x M8	30	276	3,50
		70	4660	170							279	
		75	6000	191							279	

[1] Shaft-Ø of the customer's machine (for example). [2] Transmittable values with shaft-Ø d_w of the customer's machine.

More sizes up to inner-Ø d=300mm, for shaft diameter 240mm and 292,000Nm are available.
Price and delivery time on request.

Mounting

Clean and slightly lubricate the contact surfaces of shaft and hub. Place clamping set on the hub. Fasten the tensioning screws evenly, step by step until the fastening torque T_A of the table is reached. To reach the value stated in the table several fastening steps are required. The figures for T and F_{ax} stated in the table were calculated for an assembly with oil.

Attention: Do not use any lubricant containing molybdenum sulphide.

Demounting: Evenly unscrew all tensioning screws one by one. Do not fully remove the screws from the thread. The clamping element usually disengages on its own.

Tolerances, Surface Roughness

One good turn is sufficient.

Highest permissible surface roughness: R_t=12.5µm.

Tolerances for d_w/d: H8/h8.

Shrink Disks ST-R, Stainless

Material: Stainless steel 1.4057.

- For medium torques.
- No axial shaft-hub movement.
- Quick mounting.
- Quick demounting.

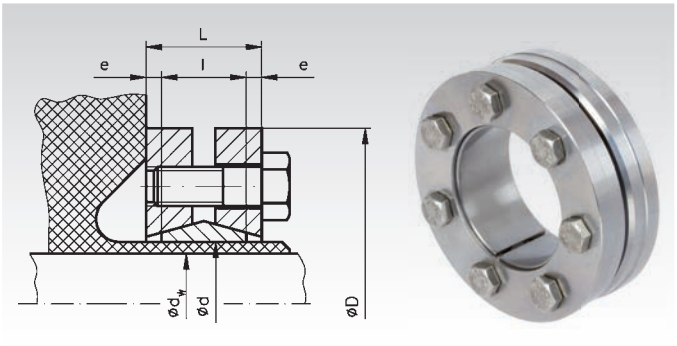

Ordering Details: e.g.: Product No. 615 998 14, Shrink Disk ST-R, Inner-Ø 14 mm

Product No.	Inner-Ø d mm	Shaft-Ø[1] d_w mm	Torque[2] T Nm	D mm	l mm	L mm	e mm	Screws DIN 931 No. x Size	Fastening Torque T_A Nm	Contact-pressure P_N N/mm²	Weight kg
615 998 14	14	10 11 12	22 28 39	37	9	12	1,5	3x M4	2	229	0,10
615 998 16	16	12 13 14	50 66 79	41	12	15	1,5	4x M5	4	250	0,12
615 998 24	24	19 20 21	141 185 220	50	15	21	3	6x M5	4	268	0,21
615 998 30	30	24 25 26	212 240 265	60	18	23	2,5	7x M5	4	180	0,31
615 998 36	36	26 28 30	325 405 485	72	19	25	3,0	5x M6	7	215	0,53
615 998 44	44	32 35 36	340 480 525	80	22	28	3,0	7x M6	7	220	0,62
615 998 50	50	38 40 42	635 740 850	90	22	29,5	3,75	9x M6	7	225	0,81
615 998 55	55	42 45 48	595 745 900	100	23	30,5	3,75	8x M6	7	174	1,10
615 998 62	62	48 50 52	1150 1275 1450	110	23	32	4,5	12x M6	7	230	1,35
615 998 68	68	50 55 60	905 1060 1450	115	23	33	5,0	10x M6	7	175	1,45

[1] Shaft-Ø of the customer´s machine (for example). [2] Transmittable values with shaft-Ø d_w of the customer´s machine.

More sizes up to inner-Ø d=125mm, for shaft diameter 95mm and 8,555Nm are available.
Price and delivery time on request.

Mounting

Clean and slightly lubricate the contact surfaces of shaft and hub. Place clamping set on the hub. Fasten the tensioning screws evenly, step by step until the fastening torque T_A of the table is reached. To reach the value stated in the table several fastening steps are required. The figures for T and F_{ax} stated in the table were calculated for an assembly with oil.

Attention: Do not use any lubricant containing molybdenum sulphide.

Demounting: Evenly unscrew all tensioning screws one by one. Do not fully remove the screws from the thread. The clamping element usually disengages on its own.

Tolerances, Surface Roughness

One good turn is sufficient.
Highest permissible surface roughness: R_t=16µm.

Tolerances for d_w/d:

For d from 14 - 30mm: H6/j6.
For d from 35 - 50 mm: H6/h6.
For d from 55 - 68 mm: H6/g6.

Locking Assemblies (Rigid Couplings) ST-K

Material: Steel.

- For connecting two shafts, as a rigid coupling.
- For medium torques.
- Easy mounting.
- Self-releasing at dismounting.
- No axial movement during mounting.

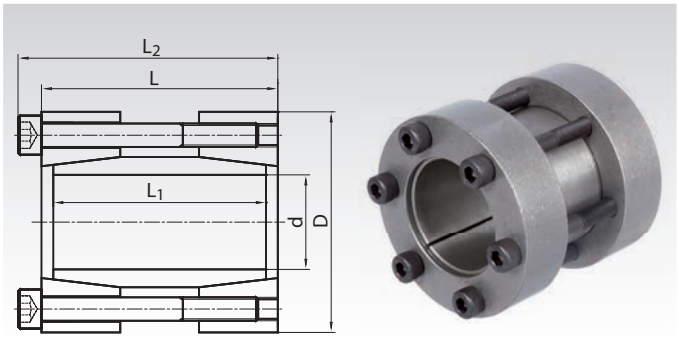

Ordering Details: e.g.: Product No. 615 880 15, Locking Assembly ST-K, 15 mm

Product No.	d mm	D mm	L mm	L_1 mm	L_2 mm	T Nm	F_{ax} kN	P_W N/mm²	Screws 12.9 Number x Size	T_A Nm	Weight kg
615 880 15	15	45	50	44	56	125	16	126	4 x M6	17	0,40
615 880 16	16	45	50	44	56	131	17	117	4 x M6	17	0,40
615 880 17	17	50	50	44	56	210	23	118	4 x M6	17	0,50
615 880 18	18	50	50	44	56	220	24	109	4 x M6	17	0,46
615 880 19	19	50	50	44	56	230	24	96	4 x M6	17	0,50
615 880 20	20	50	50	44	56	240	25	93	4 x M6	17	0,50
615 880 22	22	55	60	54	66	270	25	107	4 x M6	17	0,60
615 880 24	24	55	60	54	66	290	25	96	4 x M6	17	0,60
615 880 25	25	55	60	54	66	470	35	95	6 x M6	17	0,66
615 880 28	28	60	60	54	66	490	35	84	6 x M6	17	0,70
615 880 30	30	60	60	54	66	540	37	79	6 x M6	17	0,73
615 880 32	32	75	60	54	68	730	43	77	4 x M8	41	1,30
615 880 35	35	75	75	69	83	810	45	82	4 x M8	41	1,34
615 880 38	38	75	75	69	83	860	46	75	4 x M8	41	1,30
615 880 40	40	75	75	69	83	880	46	64	4 x M8	41	1,40
615 880 42	42	90	75	69	83	1430	66	65	6 x M8	41	2,0
615 880 45	45	90	85	79	93	1490	66	73	6 x M8	41	2,5
615 880 48	48	90	85	79	93	1640	68	70	6 x M8	41	2,4
615 880 50	50	90	85	79	93	1670	68	64	6 x M8	41	2,0
615 880 55	55	105	85	79	93	2520	90	63	8 x M8	41	3,3
615 880 60	60	105	85	79	93	2760	92	59	8 x M8	41	2,6
615 880 65	65	105	85	79	93	2930	92	53	8 x M8	41	3,0
615 880 70	70	125	100	94	110	3800	106	50	6 x M10	83	5,4
615 880 75	75	125	100	94	110	3850	107	47	6 x M10	83	5,0
615 880 80	80	125	100	94	110	4030	109	65	6 x M10	83	4,7
615 880 85	85	130	100	94	110	4260	121	64	8 x M10	83	5,5
615 880 90	90	135	100	94	110	4820	122	72	8 x M10	83	7,0
615 880 95	95	140	120	114	130	5170	124	67	8 x M10	83	7,5
615 881 00	100	150	120	114	132	5590	127	66	8 x M12	142	7,8

More sizes up to d=110mm for 7,400Nm are available.
Price and delivery time on request.

T = transmittable torque at F_{ax} = 0.
F_{ax} = transmittable axial force at T = 0.
P_W = surface pressure onto the shaft.
T_A = Fastening torque of the screws.

Fit

Shaft h8, Hub H8.
Surface roughness max. 12.5µm.

Mounting

Slightly oil the locking assembly before mounting, do not use molibdenum disulphide or grease. Tighten the screws evenly and crosswise in several steps.

Demounting

Due to the cone angle, the locking assembly is usually released once all screws have been fully unfastened.

Taper Bushes

Material: GG25.

Bores ISO E8, feather keyways in accordance with DIN 6885/1. Screws included in delivery.

Shaft tolerance +0.05/-0.125 mm.
Can be used with or without parallel key, depending on the required torque.

Other bush sizes and bores available at short notice (some in stock). Assembly instructions see page 824.

Ordering Details: e.g.: Product No. 622 501 09, Taper Bush 1008, 9 mm Bore

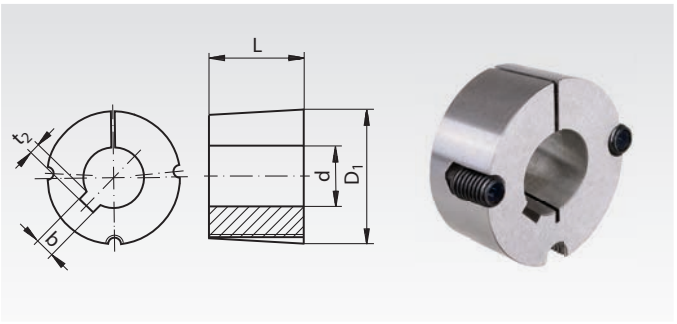

Product No.	Taper bush No.	Bore d mm	Keyway b mm	t_2 mm	L mm	D_1 mm	Weight kg
622 501 09	1008	9	3	1,4	22,3	35,2	0,175
622 501 10	1008	10	3	1,4	22,3	35,2	0,160
622 501 11	1008	11	4	1,8	22,3	35,2	0,140
622 501 12	1008	12	4	1,8	22,3	35,2	0,120
622 501 14	1008	14	5	2,3	22,3	35,2	0,118
622 501 15	1008	15	5	2,3	22,3	35,2	0,116
622 501 16	1008	16	5	2,3	22,3	35,2	0,112
622 501 18	1008	18	6	2,8	22,3	35,2	0,100
622 501 19	1008	19	6	2,8	22,3	35,2	0,098
622 501 20	1008	20	6	2,8	22,3	35,2	0,094
622 501 22	1008	22	6	2,8	22,3	35,2	0,080
622 501 24[1)]	1008	24	8	1,3[1)]	22,3	35,2	0,070
622 501 25[1)]	1008	25	8	1,3[1)]	22,3	35,2	0,068
622 502 09	1108	9	3	1,4	22,3	38,4	0,195
622 502 10	1108	10	3	1,4	22,3	38,4	0,180
622 502 11	1108	11	4	1,8	22,3	38,4	0,165
622 502 12	1108	12	4	1,8	22,3	38,4	0,154
622 502 14	1108	14	5	2,3	22,3	38,4	0,148
622 502 15	1108	15	5	2,3	22,3	38,4	0,145
622 502 16	1108	16	5	2,3	22,3	38,4	0,140
622 502 17	1108	17	5	2,3	22,3	38,4	0,136
622 502 18	1108	18	6	2,8	22,3	38,4	0,132
622 502 19	1108	19	6	2,8	22,3	38,4	0,126
622 502 20	1108	20	6	2,8	22,3	38,4	0,122
622 502 22	1108	22	6	2,8	22,3	38,4	0,112
622 502 24	1108	24	8	3,3	22,3	38,4	0,096
622 502 25	1108	25	8	3,3	22,3	38,4	0,092
622 502 28[1)]	1108	28	8	1,3[1)]	22,3	38,4	0,088
622 503 10	1210	10	3	1,4	25,4	47,5	0,282
622 503 11	1210	11	4	1,8	25,4	47,5	0,280
622 503 12	1210	12	4	1,8	25,4	47,5	0,278
622 503 14	1210	14	5	2,3	25,4	47,5	0,274
622 503 15	1210	15	5	2,3	25,4	47,5	0,267
622 503 16	1210	16	5	2,3	25,4	47,5	0,262
622 503 17	1210	17	5	2,3	25,4	47,5	0,257
622 503 18	1210	18	6	2,8	25,4	47,5	0,250
622 503 19	1210	19	6	2,8	25,4	47,5	0,244
622 503 20	1210	20	6	2,8	25,4	47,5	0,240
622 503 22	1210	22	6	2,8	25,4	47,5	0,224
622 503 24	1210	24	8	3,3	25,4	47,5	0,208
622 503 25	1210	25	8	3,3	25,4	47,5	0,198
622 503 28	1210	28	8	3,3	25,4	47,5	0,184
622 503 30	1210	30	8	3,3	25,4	47,5	0,168
622 503 32	1210	32	10	3,3	25,4	47,5	0,160
622 513 14	1215	14	5	2,3	38,1	47,5	0,380
622 513 16	1215	16	5	2,3	38,1	47,5	0,370
622 513 18	1215	18	6	2,8	38,1	47,5	0,350
622 513 19	1215	19	6	2,8	38,1	47,5	0,340
622 513 20	1215	20	6	2,8	38,1	47,5	0,335
622 513 22	1215	22	6	2,8	38,1	47,5	0,320
622 513 24	1215	24	8	3,3	38,1	47,5	0,290
622 513 25	1215	25	8	3,3	38,1	47,5	0,285
622 513 28	1215	28	8	3,3	38,1	47,5	0,260
622 513 30	1215	30	8	3,3	38,1	47,5	0,230
622 513 32	1215	32	10	3,3	38,1	47,5	0,200

Product No.	Taper bush No.	Bore d mm	Keyway b mm	t_2 mm	L mm	D_1 mm	Weight kg
622 504 12	1610	12	4	1,8	25,4	57	0,416
622 504 14	1610	14	5	2,3	25,4	57	0,412
622 504 15	1610	15	5	2,3	25,4	57	0,408
622 504 16	1610	16	5	2,3	25,4	57	0,402
622 504 17	1610	17	5	2,3	25,4	57	0,397
622 504 18	1610	18	6	2,8	25,4	57	0,390
622 504 19	1610	19	6	2,8	25,4	57	0,380
622 504 20	1610	20	6	2,8	25,4	57	0,373
622 504 22	1610	22	6	2,8	25,4	57	0,366
622 504 24	1610	24	8	3,3	25,4	57	0,356
622 504 25	1610	25	8	3,3	25,4	57	0,348
622 504 28	1610	28	8	3,3	25,4	57	0,324
622 504 30	1610	30	8	3,3	25,4	57	0,304
622 504 32	1610	32	10	3,3	25,4	57	0,280
622 504 35	1610	35	10	3,3	25,4	57	0,264
622 504 38	1610	38	10	3,3	25,4	57	0,240
622 504 40	1610	40	12	3,3	25,4	57	0,210
622 504 42	1610	42	12	3,3	25,4	57	0,200
622 508 12	1615	12	4	1,8	38,1	57	0,590
622 508 14	1615	14	5	2,3	38,1	57	0,580
622 508 15	1615	15	5	2,3	38,1	57	0,580
622 508 16	1615	16	5	2,3	38,1	57	0,580
622 508 18	1615	18	6	2,8	38,1	57	0,561
622 508 19	1615	19	6	2,8	38,1	57	0,557
622 508 20	1615	20	6	2,8	38,1	57	0,552
622 508 22	1615	22	6	2,8	38,1	57	0,540
622 508 24	1615	24	8	3,3	38,1	57	0,520
622 508 25	1615	25	8	3,3	38,1	57	0,510
622 508 28	1615	28	8	3,3	38,1	57	0,470
622 508 30	1615	30	8	3,3	38,1	57	0,446
622 508 32	1615	32	10	3,3	38,1	57	0,414
622 508 35	1615	35	10	3,3	38,1	57	0,380
622 508 38	1615	38	10	3,3	38,1	57	0,346
622 508 40	1615	40	12	3,3	38,1	57	0,340
622 508 42[1)]	1615	42	12	2,2[1)]	38,1	57	0,260
622 505 12	2012	12	4	1,8	31,8	70	0,810
622 505 14	2012	14	5	2,3	31,8	70	0,800
622 505 15	2012	15	5	2,3	31,8	70	0,785
622 505 16	2012	16	5	2,3	31,8	70	0,770
622 505 18	2012	18	6	2,8	31,8	70	0,762
622 505 19	2012	19	6	2,8	31,8	70	0,756
622 505 20	2012	20	6	2,8	31,8	70	0,750
622 505 22	2012	22	6	2,8	31,8	70	0,736
622 505 24	2012	24	8	3,3	31,8	70	0,724
622 505 25	2012	25	8	3,3	31,8	70	0,714
622 505 28	2012	28	8	3,3	31,8	70	0,684
622 505 30	2012	30	8	3,3	31,8	70	0,658
622 505 32	2012	32	10	3,3	31,8	70	0,630
622 505 35	2012	35	10	3,3	31,8	70	0,604
622 505 38	2012	38	10	3,3	31,8	70	0,566
622 505 40	2012	40	12	3,3	31,8	70	0,538
622 505 42	2012	42	12	3,3	31,8	70	0,510
622 505 45	2012	45	14	3,8	31,8	70	0,460
622 505 48	2012	48	14	3,8	31,8	70	0,404
622 505 50	2012	50	14	3,8	31,8	70	0,372

[1)] With flat keyway.

Taper Bushes

Material: GG25.

Bores ISO E8, feather keyways in accordance with DIN 6885/1. Screws included in delivery. From size 3525 with three screws.

Shaft tolerance +0.05/-0.125 mm.
Can be used with or without parallel key, depending on the required torque.

Other bush sizes and bores available at short notice (some in stock). Assembly instructions see page 824.

Ordering Details: e.g.: Product No. 622 506 15, Taper Bush 2517, 15 mm Bore

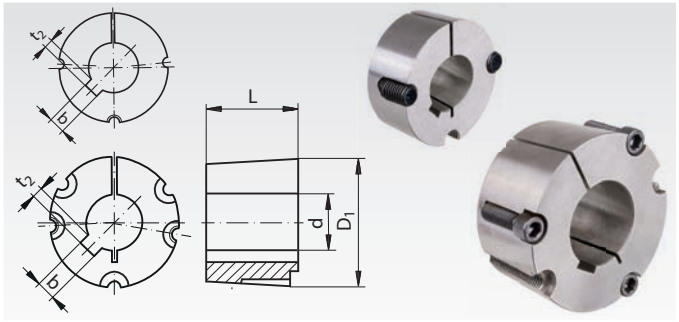

Product No.	Taper bush No.	Bore d mm	Keyway b mm	t_2 mm	L mm	D_1 mm	Weight kg
622 506 15	2517	15	5	2,3	44,5	85,5	1,85
622 506 16	2517	16	5	2,3	44,5	85,5	1,80
622 506 18	2517	18	6	2,8	44,5	85,5	1,70
622 506 19	2517	19	6	2,8	44,5	85,5	1,62
622 506 20	2517	20	6	2,8	44,5	85,5	1,60
622 506 22	2517	22	6	2,8	44,5	85,5	1,57
622 506 24	2517	24	8	3,3	44,5	85,5	1,57
622 506 25	2517	25	8	3,3	44,5	85,5	1,56
622 506 28	2517	28	8	3,3	44,5	85,5	1,52
622 506 30	2517	30	8	3,3	44,5	85,5	1,49
622 506 32	2517	32	10	3,3	44,5	85,5	1,45
622 506 35	2517	35	10	3,3	44,5	85,5	1,40
622 506 38	2517	38	10	3,3	44,5	85,5	1,35
622 506 40	2517	40	12	3,3	44,5	85,5	1,32
622 506 42	2517	42	12	3,3	44,5	85,5	1,27
622 506 45	2517	45	14	3,8	44,5	85,5	1,20
622 506 48	2517	48	14	3,8	44,5	85,5	1,13
622 506 50	2517	50	14	3,8	44,5	85,5	1,08
622 506 55	2517	55	16	4,3	44,5	85,5	0,96
622 506 60	2517	60	18	4,4	44,5	85,5	0,81
622 506 65[1)]	2517	65	18	3,4[1)]	44,5	85,5	0,65
622 507 20	3020	20	6	2,8	50,8	108	3,00
622 507 25	3020	25	8	3,3	50,8	108	2,91
622 507 28	3020	28	8	3,3	50,8	108	2,79
622 507 30	3020	30	8	3,3	50,8	108	2,84
622 507 32	3020	32	10	3,3	50,8	108	2,80
622 507 35	3020	35	10	3,3	50,8	108	2,75
622 507 38	3020	38	10	3,3	50,8	108	2,70
622 507 40	3020	40	12	3,3	50,8	108	2,64
622 507 42	3020	42	12	3,3	50,8	108	2,59
622 507 45	3020	45	14	3,8	50,8	108	2,52
622 507 48	3020	48	14	3,8	50,8	108	2,43
622 507 50	3020	50	14	3,8	50,8	108	2,37
622 507 55	3020	55	16	4,3	50,8	108	2,23
622 507 60	3020	60	18	4,4	50,8	108	2,00
622 507 65	3020	65	18	4,4	50,8	108	1,89
622 507 70	3020	70	20	4,9	50,8	108	1,70
622 507 75	3020	75	20	4,9	50,8	108	1,49
622 511 30	3030	30	8	3,3	76,2	108	4,05
622 511 35	3030	35	10	3,3	76,2	108	3,95
622 511 38	3030	38	10	3,3	76,2	108	3,86
622 511 40	3030	40	12	3,3	76,2	108	3,82
622 511 42	3030	42	12	3,3	76,2	108	3,69
622 511 45	3030	45	14	3,8	76,2	108	3,55
622 511 48	3030	48	14	3,8	76,2	108	3,45
622 511 50	3030	50	14	3,8	76,2	108	3,42
622 511 55	3030	55	16	4,3	76,2	108	3,18
622 511 60	3030	60	18	4,4	76,2	108	2,95
622 511 65	3030	65	18	4,4	76,2	108	2,68
622 511 70	3030	70	20	4,9	76,2	108	2,06
622 511 75	3030	75	20	4,9	76,2	108	1,64

[1)] With flat keyway.

Product No.	Taper bush No.	Bore d mm	Keyway b mm	t_2 mm	L mm	D_1 mm	Weight kg
622 509 35	3525	35	10	3,3	63,5	127	4,91
622 509 38	3525	38	10	3,3	63,5	127	4,85
622 509 40	3525	40	12	3,3	63,5	127	4,80
622 509 42	3525	42	12	3,3	63,5	127	4,71
622 509 45	3525	45	14	3,8	63,5	127	4,67
622 509 48	3525	48	14	3,8	63,5	127	4,55
622 509 50	3525	50	14	3,8	63,5	127	4,44
622 509 55	3525	55	16	4,3	63,5	127	4,29
622 509 60	3525	60	18	4,4	63,5	127	4,05
622 509 65	3525	65	18	4,4	63,5	127	3,88
622 509 70	3525	70	20	4,9	63,5	127	3,58
622 509 75	3525	75	20	4,9	63,5	127	3,37
622 509 80	3525	80	22	5,4	63,5	127	3,05
622 509 85	3525	85	22	5,4	63,5	127	2,77
622 509 90	3525	90	25	5,4	63,5	127	2,47
622 510 30	3535	30	8	3,3	89,0	127	6,95
622 510 35	3535	35	10	3,3	89,0	127	6,70
622 510 38	3535	38	10	3,3	89,0	127	6,53
622 510 40	3535	40	12	3,3	89,0	127	6,48
622 510 42	3535	42	12	3,3	89,0	127	6,40
622 510 45	3535	45	14	3,8	89,0	127	6,25
622 510 48	3535	48	14	3,8	89,0	127	6,17
622 510 50	3535	50	14	3,8	89,0	127	6,05
622 510 55	3535	55	16	4,3	89,0	127	5,81
622 510 60	3535	60	18	4,4	89,0	127	5,50
622 510 65	3535	65	18	4,4	89,0	127	5,20
622 510 70	3535	70	20	4,9	89,0	127	4,88
622 510 75	3535	75	20	4,9	89,0	127	4,46
622 510 80	3535	80	22	5,4	89,0	127	4,08
622 510 85	3535	85	22	5,4	89,0	127	3,67
622 510 90	3535	90	25	5,4	89,0	127	3,21
622 512 40	4030	40	12	3,3	76,2	146	8,92
622 512 42	4030	42	12	3,3	76,2	146	8,80
622 512 45	4030	45	14	3,8	76,2	146	8,67
622 512 48	4030	48	14	3,8	76,2	146	8,49
622 512 50	4030	50	14	3,8	76,2	146	8,33
622 512 55	4030	55	16	4,3	76,2	146	8,15
622 512 60	4030	60	18	4,4	76,2	146	7,85
622 512 65	4030	65	18	4,4	76,2	146	7,60
622 512 70	4030	70	20	4,9	76,2	146	7,18
622 512 75	4030	75	20	4,9	76,2	146	6,84
622 512 80	4030	80	22	5,4	76,2	146	6,46
622 512 85	4030	85	22	5,4	76,2	146	6,06
622 512 90	4030	90	25	5,4	76,2	146	5,59
622 512 91	4030	100	28	6,4	76,2	146	4,63
622 514 40	4040	40	12	3,3	102,0	146	10,19
622 514 42	4040	42	12	3,3	102,0	146	10,03
622 514 45	4040	45	14	3,8	102,0	146	9,86
622 514 48	4040	48	14	3,8	102,0	146	9,66
622 514 50	4040	50	14	3,8	102,0	146	9,48
622 514 55	4040	55	16	4,3	102,0	146	9,27
622 514 60	4040	60	18	4,4	102,0	146	8,93
622 514 65	4040	65	18	4,4	102,0	146	8,65
622 514 70	4040	70	20	4,9	102,0	146	8,17
622 514 75	4040	75	20	4,9	102,0	146	7,78
622 514 80	4040	80	22	5,4	102,0	146	7,35
622 514 85	4040	85	22	5,4	102,0	146	6,89
622 514 90	4040	90	25	5,4	102,0	146	6,36
622 514 95	4040	95	25	5,4	102,0	146	5,94
622 514 91	4040	100	28	6,4	102,0	146	5,27

Taper Bushes

Material: GG25.

Bores ISO E8, feather keyways in accordance with DIN 6885/1.
Screws included in delivery.

Shaft tolerance +0.05/-0.125 mm.
Can be used with or without parallel key,
depending on the required torque.

Other bush sizes and bores available at short notice
(some in stock). Assembly instructions see page 824.

Ordering Details: e.g.: Product No. 622 515 55, Taper Bush 4545, 55 mm Bore

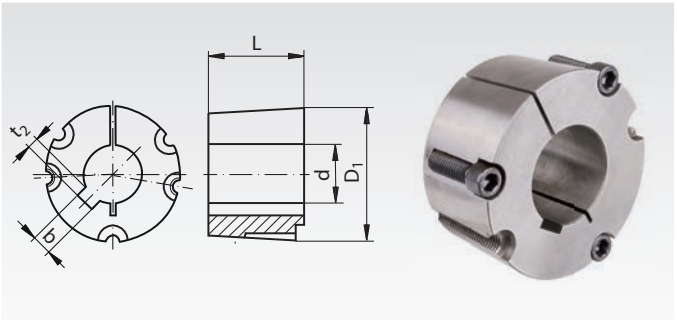

Product No.	Taper bush No.	Bore d mm	Keyway b mm	t_2 mm	L mm	D_1 mm	Weight kg
622 515 55	4545	55	16	4,3	114	162	13,2
622 515 60	4545	60	18	4,4	114	162	12,8
622 515 65	4545	65	18	4,4	114	162	12,4
622 515 70	4545	70	20	4,9	114	162	12,0
622 515 75	4545	75	20	4,9	114	162	11,6
622 515 80	4545	80	22	5,4	114	162	11,0
622 515 85	4545	85	22	5,4	114	162	10,5
622 515 90	4545	90	25	5,4	114	162	10,0
622 515 95	4545	95	25	5,4	114	162	9,4
622 515 91	4545	100	28	6,4	114	162	8,6
622 515 93	4545	110	28	6,4	114	162	7,2

Product No.	Taper bush No.	Bore d mm	Keyway b mm	t_2 mm	L mm	D_1 mm	Weight kg
622 516 70	5050	70	20	4,9	127	178,0	16,7
622 516 75	5050	75	20	4,9	127	178,0	16,1
622 516 80	5050	80	22	5,4	127	178,0	15,6
622 516 85	5050	85	22	5,4	127	178,0	15,0
622 516 90	5050	90	25	5,4	127	178,0	14,4
622 516 95	5050	95	25	5,4	127	178,0	13,9
622 516 91	5050	100	28	6,4	127	178,0	13,1
622 516 92	5050	105	28	6,4	127	178,0	12,5
622 516 93	5050	110	28	6,4	127	178,0	11,6
622 516 94	5050	115	32	7,4	127	178,0	11,0
622 516 96	5050	120	32	7,4	127	178,0	9,8
622 516 97	5050	125	32	7,4	127	178,0	9,1

Spare Screws for Taper Bushes

Material: Steel. **Supply:** One screw (order quantity as needed).
Taper bushes have two or (from size 3525) three screws depending on size.

Ordering Details: e.g.: Product No. 622 501 99, Spare Screw , Taper Bush 1008 and 1108

Product No.	to match Taper bush	Size inch	Screw type	Tightening Torque Nm	Weight g
622 501 99	1008 ; 1108	1/4" x 1/2"	Grub screw with internal hexagon	5,6	1,9
622 503 99	1210 - 1615	3/8" x 5/8"	Grub screw with internal hexagon	20	5,2
622 505 99	2012 ; 2017	7/16" x 7/8"	Grub screw with internal hexagon	30	11,0
622 506 99	2517 ; 2525	1/2" x 1"	Grub screw with internal hexagon	50	16,4
622 507 99	3020 ; 3030	5/8" x 1 1/4"	Grub screw with internal hexagon	90	33,2
622 510 99	3525 ; 3535	1/2" x 1 1/2"	Hexagon socket head cap screws	112	47,3
622 512 99	4030 ; 4040	5/8" x 1 3/4"	Hexagon socket head cap screws	170	89,0
622 515 99	4545	3/4" x 2"	Hexagon socket head cap screws	190	147
622 516 99	5050	7/8" x 2 1/4"	Hexagon socket head cap screws	270	227

Welding Hubs for Taper Bushes

Material: Steel (St52 or comparable), good weldable.

Hub for fixing a chain plate wheel or similar parts with a
low priced taper bush onto a shaft.
Taper bush and chain plate wheel have to be ordered separately.
Recommended bore tolerance: H8.

Before welding, a taper bush should be mounted with a piece of
shaft into the welding hub to avoid deforming by heat.

Ordering Details: e.g.: Product No. 140 901 01, Welding Hub for Taper Bush 1210

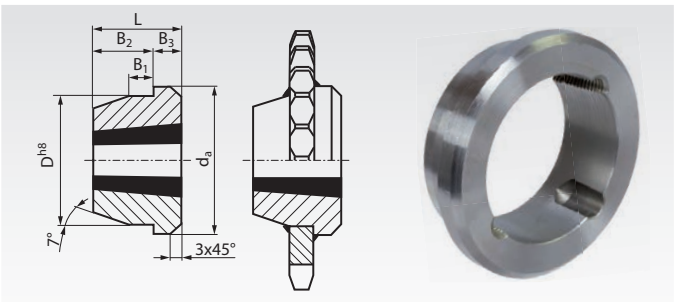

Product No.	For Taper Bush Type	d_a mm	D^{h8} mm	B_1 mm	B_2 mm	B_3 mm	L mm	Weight kg	Bush bore size min. mm	Bush bore size max. mm
140 901 01	1210	73	60	10	16	9	25	0,31	10	32
140 901 02	1215	76	60	11	22	16	38	0,50	14	32
140 901 03	1610	83	70	10	16	9	25	0,37	12	42
140 901 04	1615	83	70	11	22	16	38	0,60	12	42
140 901 05	2012	96	90	12	22	10	32	0,72	12	50
140 901 06	2517	127	110	13	26	19	45	1,8	15	65
140 901 07	3020	152	130	18	27	24	51	2,6	20	75
140 901 08	3030	152	130	19	51	25	76	3,6	30	75
140 901 09	3525	184	155	25	40	25	65	7,3	35	90
140 901 10	3535	184	155	25	57	32	89	6,4	30	90
140 901 11	4040	225	195	35	70	32	102	13,4	40	100
140 901 12	4545	254	220	40	76	38	114	20,0	55	110
140 901 13	5050	276	242	40	89	38	127	25,0	70	125

www.maedler.de

...the entire MÄDLER® range with CAD files on the Internet

We present the entire ***MÄDLER***® range with CAD files and ***MÄDLER***® info, continuously updated, on the internet. Fast access to the data, fast ordering by internet.
Orders by internet, phone, fax or e-mail: We guarantee delivery at short notice.





Dimensions and other information in this catalogue display the current state of technology. We reserve the right for changes.
This catalogue was created with due diligence, but errors might still occur. We refuse to accept any claims in this respect. We reserve the right to alter dimensions, and to change or remove single products and product groups without prior notice. Our general conditions of sales, delivery and payment can be found on the last page of this catalogue.

...we keep things moving

Couplings Overview

Rigid, One-Piece



One-piece clamp coupling
Steel burnished

Page 368

Shaft diameter up to 50 mm.
Torque up to 2250 Nm.



One-piece clamp coupling
Stainless Steel

Page 368

Shaft diameter up to 50 mm.
Torque up to 2250 Nm.



Rigid Coupling TR
Steel and
Stainless Steel

Page 369

Shaft diameter up to 50 mm.
Torque up to 490 Nm.



Two-Piece clamp Couplings
Grey Cast Iron
DIN 115

Page 369

Shaft diameter up to 100 mm.
Torque up to 5400 Nm.

Rigid Two-Piece



Two-Piece clamp Couplings
Steel burnished

Page 368

Shaft diameter up to 50 mm.
Torque up to 2250 Nm.



Two-Piece clamp Couplings
Stainless Steel

Page 368

Shaft diameter up to 50 mm.
Torque up to 2250 Nm.



Rigid Coupling
ST-K

Page 370

Shaft diameter up to 100 mm.
Torque up to 5590 Nm.

Torsionally Stiff, Angular Flexibility



Torsionally-Stiff Couplings HU
Set-Screw Style

Page 371

Shaft diameter up to 12 mm.
Torque up to 3.5 Nm.



Torsionally-Stiff Couplings HB
Clamp Style

Page 371

Shaft diameter up to 16 mm.
Torque up to 3.5 Nm.



Curved-Tooth Gear Coupling
BW
Two-Part
Plastic

Page 380

Shaft diameter up to 24 mm.
Torque up to 24 Nm.



Curved-Tooth Gear Coupling BOZ
Three-Part
Plastic

Page 381

Shaft diameter up to 24 mm.
Torque up to 24 Nm.



Curved-Tooth Gear Coupling
BOS II
Polyamide/
Sintered Metal

Page 382

Shaft diameter up to 24 mm.
Torque up to 40 Nm.

Torsionally Stiff, Transversal Flexibility



Torsionally-Stiff Couplings
HZ+HZD
Set-Screw Style

Page 372

Shaft diameter up to 30 mm.
Torque up to 44 Nm.



Torsionally-Stiff Couplings
HF + HFD
Clamp Style

Page 372

Shaft diameter up to 30 mm.
Torque up to 44 Nm.

Couplings Overview

Torsionally Stiff, Angular Flexibility, Transversal Flexibility



Self-Aligning Couplings KA Aluminium, Stainless Steel, Plastic

Page 375

Shaft diameter up to 16 mm.
Torque up to 10 Nm.



Self-Aligning Couplings LA Aluminium, Stainless Steel, Plastic

Page 375

Shaft diameter up to 30 mm.
Torque up to 102 Nm.

Torsionally Stiff, Angular, Transv. and Longitudinal Flexibility



Metal-Bellow Couplings MBK (Short) and MBL (Long) Clamp Style

Page 377

Shaft diameter up to 35 mm.
Torque up to 60 Nm.



Membrane Couplings MEM

Page 379

Shaft diameter up to 28mm.
Torque up to 60 Nm.

Torsionally Elastic, Angular Elastic, Transversal Flexible, Longitudinally Flexible



Flexible Couplings EK One Layer

Page 376

Shaft diameter up to 14 mm.
Torque up to 1.5 Nm.



Flexible Couplings EL Three Layers

Page 376

Shaft diameter up to 64 mm.
Torque up to 500 Nm.



Chain Couplings with Casing

Page 384

Shaft diameter up to 60 mm.
Torque up to 770 Nm.



Chain Couplings

Page 384

Shaft diameter up to 70 mm.
Torque up to 1480 Nm.



Elastic Couplings MU Magnesium

Page 385

Shaft diameter up to 73 mm.
Torque up to 2500 Nm.

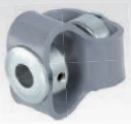

Highly-Elastic Couplings PU

Page 385

Shaft diameter up to 16 mm.
Torque up to 18 Nm.



Elastic Couplings RN, Aluminium

Page 386

Shaft diameter up to 48 mm.
Torque up to 310 Nm.



Elastic Couplings RNG, Grey Cast Iron

Page 387

Shaft diameter up to 115 mm.
Torque up to 3300 Nm.

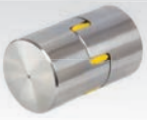

Elastic Couplings RNI, Stainless Steel

Page 387

Shaft diameter up to 48 mm.
Torque up to 310 Nm.



Elastic Couplings RNT for Taper-Bushes

Page 388

Shaft diameter up to 75 mm.
Torque up to 3600 Nm.



Elastic Couplings RNK, backlash-free, with Clamp Hub

Page 389

Shaft diameter up to 48 mm.
Torque up to 495 Nm.



Elastic Couplings RNH, backlash-free, with Half Shell Clamp

Page 390

Shaft diameter up to 48 mm.
Torque up to 452 Nm.



Spiders for Elastic Couplings, 92° Shore A

Page 391

Torque up to 3300 Nm.



Spiders for Elastic Couplings, 98° Shore A

Page 391

Torque up to 4950 Nm.



Spiders for Elastic Couplings, 64° Shore D

Page 391

Torque up to 6185 Nm.



Elastic Couplings DXA, Grey Cast Iron

Page 393

Shaft diameter up to 100 mm.
Torque up to 5500 Nm.



Spiders for Elastic Couplings DXA, 92° Shore A

Page 393

Torque up to 5500 Nm.



Connecting Shafts Page 766

Couplings Overview

Friction Clutches



Friction Clutches Type B Axial Arrangement

Page 394

Shaft diameter up to 8 mm.
Torque up to 1.3 Nm.



Friction Clutches Type C Transversal Flexibility

Page 394

Shaft diameter up to 8 mm.
Torque up to 1.3 Nm.



Sliding Hubs with Torsionally-Flexible Coupling

Page 395

Shaft diameter up to 35 mm.
Torque up to 140 Nm.



Multi-Disk Friction Clutches PD

Page 396

Shaft diameter up to 70 mm.
Torque up to 320 Nm.



Safety Clutches SI

Page 397

Shaft diameter up to 50 mm.
Torque up to 180 Nm.



Limit Switch for Safety Clutches

Page 397

Voltage 220 - 250 V AC.
Strength of current up to 10 A.



Safety Coupling CM for Very Exact Setting

Page 398

Shaft diameter up to 55 mm.
Torque up to 800 Nm.

Sliding Hubs



Slip hubs Type A Concentric Design

Page 394

Shaft diameter up to 8 mm.
Torque up to 1.3 Nm.



Sliding Hubs FS Simple Version

Page 399

Shaft diameter up to 65 mm.
Torque up to 1200 Nm.



Sliding Hubs FA Premium-Quality Version

Page 400

Shaft diameter up to 80 mm.
Torque up to 1200 Nm.



Sliding Hubs FA Premium-Quality Version with Clamp Hub

Page 401

Shaft diameter up to 40 mm.
Torque up to 280 Nm.



Sliding Hubs ROBA® Premium-Quality Version

Page 402

Other sizes and designs on request.

Selection Tool
on the Internet at ***www.maedler.de***
in the section ***MÄDLER®-Tools***

Notes Regarding Couplings

General

Couplings serve to connect two shafts in order to transmit the driving power (transmission of speed and torque). As different applications lead to most diverse requirements for couplings, there is a large number of different types of couplings with sometimes contradictory characteristics available on the market. If possible, the shafts should be supported right besides the couplings in order to avoid unnecessary vibration. This is particularly important for elastic couplings.

Torque Values

Depending on the type of coupling, the torques stated refer to either the maximum value or the nominal torque. The maximum permissible torque must never be exceeded (risk of fracture). The nominal torque is the value valid for the permissible permanent load (e.g. for elastic couplings). This value should be exceeded only as exception and for short times, and only up to the maximum permissible torque. Depending on the type of drive unit used and the type of shock load, the nominal torque of the drive unit has to be multiplied with the respective operating factor taken from the table below:

Operating Torque = Driving Torque x Operating Factor

The operating torque of the drive unit must not exceed the nominal torque of the coupling.

The driving torque can be derived from the driving power with the following formula:

$$T_{[Nm]} = 9550 \cdot \frac{P\ [kW]}{n\ [min^{-1}]} \cdot S$$

Operating Factors

Type of Shock Load	Type of Drive Unit: Electric Engines, Steam Turbines, Shaftings	4 - 6 Cylinder Combustion Engines	1 - 3 Cylinder Combustion Engines
Weak shock load **Low starting torque, uniform operation** small light generators, small centrifugal pumps, small blowers, light machine tools, light transmissions	1.0	1.25	1.75
Medium shock load **Medium starting torque, slight torque fluctuations** larger conveying machinery, large blowers, centrifugal pumps and generators, large machine tools and wood working machines, rapid presses, flower mills and food grinders, shears, punches, grinding machines, washing machines, transmissions	1.25	1.5	2.0
Strong shock load **High starting torque, strong shocks, alternating sense of rotation.** centrifuges, gang saws, paper calender, roller tables, wet presses, ball and rod mills, heavy rolling mills for metal, rubber rolling mill, reciprocating machines without flywheel, cement mills, stone breakers	1.5	2.0	2.5

Rigid Couplings

These couplings do not compensate for misalignment of the shaft neither in axial nor in radial direction. They should therefore only be used with perfectly aligned shafts. Shocks and vibration are transferred without any damping.

Torsionally-Stiff Couplings

These couplings transmit the rotational movement synchronously with hardly any damping. Depending on the type of coupling more or less angular and/or axial displacement can be compensated.

Elastic Couplings

With these couplings an elastic intermediate ring usually dampens the shocks of the driving unit. In types without this ring, the coupling body is elastic. Due to the small endurance strength of the shock-dampening components, the nominal torque of the coupling is much lower than the maximum torque. The elastic rings are available as spare parts.

For couplings with elastics inserts, following factors have to be considered, additional to the standard operating factors above:

Temperature-factor

Temperatur	–30 °C to +30 °C	to +40 °C	to +60 °C	to +80 °C
Factor	1,0	1,2	1,4	1,8

Starting-factor

Starts per hour	100	200	400	800
Factor	1,0	1,2	1,4	1,6

Friction Clutches and Sliding Hubs

These clutches or hubs are used if the torque must only be transmitted up to a certain, adjustable value. If the set maximum value is exceeded the coupling device starts slipping. If the torque falls below the limit again, the slipping stops. Thus for safety reasons a separate stop mechanism for the drive unit might be required.

Friction clutches usually serve to connect two shafts. Sliding hubs usually serve to mount a drive wheel (chain wheel, drive pulley, spur gear, friction wheel, or similar) on a shaft.

Some types can be used for both applications as, e.g., either a drive wheel or a shaft connection can be flange mounted. Combinations of elastic coupling and friction clutch can also be supplied.



Reworking within 24h-service possible. Custom made parts on request.

One-Piece Clamp Couplings MAS

Material: Steel C45 burnished,
Stainless steel 1.4305.

STAINLESS

Temperature range from -40°C to +175°C.
Maximum torque 4,000 min^{-1}.
The screws ISO 4762 are covered with a layer of nylon. Thus the bolts do not loosen with vibrations.

Bore tolerance: +0.051 mm.

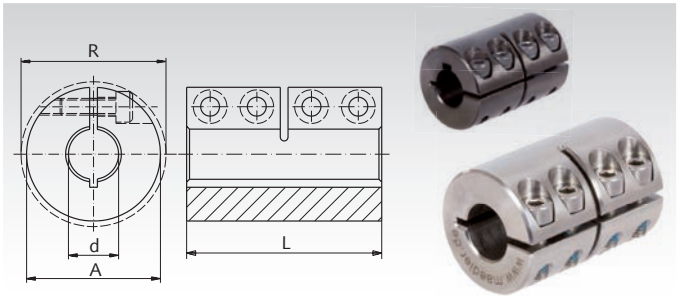

Ordering Details: e.g.: Product No. 600 603 00, Clamp Coupling MAS, 3 mm Bore, without keyway

Product No. without keyway Steel	Product No. without keyway Stainless Steel	Product No. with keyway* Steel	Product No. with keyway* Stainless Steel	Torque T** Steel Nm	Torque T** Stainless Nm	d mm	A mm	R mm	L mm	Screws ISO 4762 12.9 / A2-70	Fastening Torque T_A Steel Nm	Fastening Torque T_A Stainless Nm	Weight g
600 603 00	600 996 03	-	-	6,6	3,7	3	14	18,0	30	M3 x 8	2,1	1,1	35
600 604 00	600 996 04	-	-	8,0	5,2	4	16	19,3	30	M3 x 8	2,1	1,1	45
600 605 00	600 996 05	-	-	10,6	6,0	5	18	21,2	30	M3 x 8	2,1	1,1	47
600 606 00	600 996 06	600 706 00	600 997 06	34	10	6	18	21,2	30	M3 x 8	2,1	1,1	47
600 608 00	600 996 08	600 708 00	600 997 08	50	16	8	24	26,8	35	M3 x 10	2,1	1,1	102
600 610 00	600 996 10	600 710 00	600 997 10	85	25	10	29	32,7	45	M4 x 12	4,6	2,5	185
600 612 00	600 996 12	600 712 00	600 997 12	105	32	12	29	32,7	45	M4 x 12	4,6	2,5	180
600 614 00	600 996 14	600 714 00	600 997 14	160	40	14	34	39,1	50	M5 x 16	9,5	5,4	272
600 615 00	600 996 15	600 715 00	600 997 15	180	50	15	34	39,1	50	M5 x 16	9,5	5,4	266
600 616 00	600 996 16	600 716 00	600 997 16	200	60	16	34	39,1	50	M5 x 16	9,5	5,4	261
600 619 00	600 996 19	600 719 00	600 997 19	300	90	19	42	48,2	65	M6 x 16	16	9,6	520
600 620 00	600 996 20	600 720 00	600 997 20	350	100	20	42	48,2	65	M6 x 16	16	9,6	518
600 625 00	600 996 25	600 725 00	600 997 25	400	110	25	45	50,8	75	M6 x 16	16	9,6	623
600 630 00	600 996 30	600 730 00	600 997 30	475	150	30	53	58,1	83	M6 x 18	16	9,6	920
600 635 00	600 996 35	600 735 00	600 997 35	1100	330	35	67	74,1	95	M8 x 25	39	23	1880
600 640 00	600 996 40	600 740 00	600 997 40	1325	400	40	77	83,4	108	M8 x 25	39	23	2710
600 650 00	600 996 50	600 750 00	600 997 50	2250	688	50	85	93,2	124	M10 x 25	77	46	3520

* Feather Key Groove DIN 6885/1, Tolerance P9.
** For version without keyway. Maximum values which can only be achieved with perfect mounting and dimensional accuracy of the shaft.

Two-Piece Clamp Couplings MAT

Material: Steel C45 burnished,
Stainless steel 1.4305.

STAINLESS

Temperature range from -40°C to +175°C.
Maximum torque 4,000 min^{-1}.
The screws ISO 4762 are covered with a layer of nylon. Thus the bolts do not loosen with vibrations.

Bore tolerance:+ 0.051 mm.

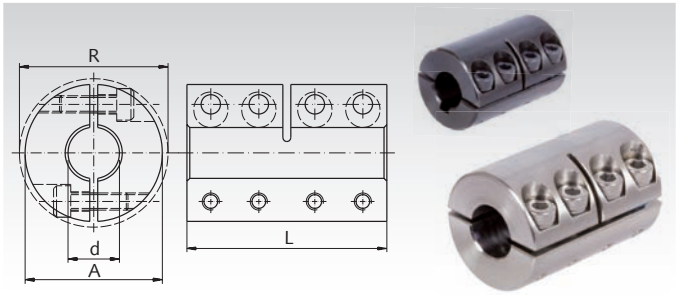

Ordering Details: e.g.: Product No. 600 803 00, Clamp Coupling MAT, 3 mm Bore, without keyway

Product No. without keyway Steel	Product No. without keyway Stainless Steel	Product No. with keyway* Steel	Product No. with keyway* Stainless Steel	Torque T** Steel Nm	Torque T** Stainless Nm	d mm	A mm	R mm	L mm	Screws ISO 4762 12.9 / A2-70	Fastening Torque T_A Steel Nm	Fastening Torque T_A Stainless Nm	Weight g
600 803 00	600 998 03	-	-	9	5,0	3	14	18,0	30	M3 x 8	2,1	1,1	35
600 804 00	600 998 04	-	-	12	6,7	4	16	19,3	30	M3 x 8	2,1	1,1	45
600 805 00	600 998 05	-	-	15	8,4	5	18	21,2	30	M3 x 8	2,1	1,1	47
600 806 00	600 998 06	600 906 00	600 999 06	34	10	6	18	21,2	30	M3 x 8	2,1	1,1	47
600 808 00	600 998 08	600 908 00	600 999 08	50	16	8	24	26,8	35	M3 x 10	2,1	1,1	102
600 810 00	600 998 10	600 910 00	600 999 10	85	28	10	29	32,7	45	M4 x 12	4,6	2,5	185
600 812 00	600 998 12	600 912 00	600 999 12	105	34	12	29	32,7	45	M4 x 12	4,6	2,5	180
600 814 00	600 998 14	600 914 00	600 999 14	160	67	14	34	39,1	50	M5 x 16	9,5	5,4	272
600 815 00	600 998 15	600 915 00	600 999 15	180	72	15	34	39,1	50	M5 x 16	9,5	5,4	266
600 816 00	600 998 16	600 916 00	600 999 16	200	77	16	34	39,1	50	M5 x 16	9,5	5,4	261
600 819 00	600 998 19	600 919 00	600 999 19	300	130	19	42	48,2	65	M6 x 16	16	9,6	520
600 820 00	600 998 20	600 920 00	600 999 20	350	137	20	42	48,2	65	M6 x 16	16	9,6	518
600 825 00	600 998 25	600 925 00	600 999 25	400	171	25	45	50,8	75	M6 x 16	16	9,6	623
600 830 00	600 998 30	600 930 00	600 999 30	475	206	30	53	58,1	83	M6 x 18	16	9,6	920
600 835 00	600 998 35	600 935 00	600 999 35	1100	438	35	67	74,1	95	M8 x 25	39	23	1880
600 840 00	600 998 40	600 940 00	600 999 40	1325	449	40	77	83,4	108	M8 x 25	39	23	2710
600 850 00	600 998 50	600 950 00	600 999 50	2250	1006	50	85	93,2	124	M10 x 25	77	46	3520

* Feather Key Groove DIN 6885/1, Tolerance P9.
** For version without keyway. Maximum values which can only be achieved with perfect mounting and dimensional accuracy of the shaft.

Set-Screw Couplings TR

Material: Steel C45 burnished.
Stainless Steel 1.4305.

Bore tolerance: +0.05 mm.

These couplings do not allow any shaft displacement in axial or radial direction. They should therefore only be used with perfectly aligned shafts.

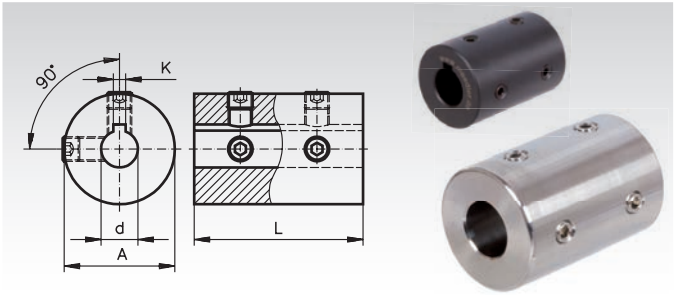

Ordering Details: e.g.: Product No. 600 106 00, Set Screw Coupling TR, Steel without Keyway, Bore 6 mm

Product No. without keyway Steel	Product No. without keyway Stainless Steel	Product No. with keyway* Steel	Product No. with keyway* Stainless Steel	Torque T** Steel Nm	Torque T** Stainless Nm	d mm	A mm	L mm	K mm	Screws DIN 916	Fastening Torque T_A Steel Nm	Fastening Torque T_A Stainless Nm	Weight g
600 106 00	**600 991 06**	**600 206 00**	**600 992 06**	4	2,7	6	18	30	2	M4	2,2	1,76	47
600 108 00	**600 991 08**	**600 208 00**	**600 992 08**	8	5,4	8	24	35	2	M4	2,2	1,76	102
600 110 00	**600 991 10**	**600 210 00**	**600 992 10**	12	8,1	10	29	45	3	M5	4,0	3,2	185
600 112 00	**600 991 12**	**600 212 00**	**600 992 12**	17	12	12	29	45	4	M6	7,2	5,8	180
600 114 00	**600 991 14**	**600 214 00**	**600 992 14**	30	20	14	34	50	5	M6	7,2	5,8	272
600 115 00	**600 991 15**	**600 215 00**	**600 992 15**	32	22	15	34	50	5	M6	7,2	5,8	266
600 116 00	**600 991 16**	**600 216 00**	**600 992 16**	35	24	16	34	50	5	M6	7,2	5,8	261
600 120 00	**600 991 20**	**600 220 00**	**600 992 20**	70	47	20	42	65	6	M6	7,2	5,8	518
600 125 00	**600 991 25**	**600 225 00**	**600 992 25**	135	91	25	45	75	8	M8	17	13,6	623
600 130 00	**600 991 30**	**600 230 00**	**600 992 30**	155	105	30	53	83	8	M8	17	13,6	920
600 135 00	**600 991 35**	**600 235 00**	**600 992 35**	230	155	35	67	95	10	M8	17	13,6	1880
600 140 00	**600 991 40**	**600 240 00**	**600 992 40**	310	210	40	77	108	12	M10	33	26,4	2710
600 150 00	**600 991 50**	**600 250 00**	**600 992 50**	490	340	50	85	124	14	M10	33	26,4	3520

* Feather Key Groove DIN 6885/1, Tolerance P9.
** For couplings with keyway: calculations based on feather-key connection.
For couplings without keyway, the transmittable torque is lower and depends on how far the set screws penetrate the shaft.

Clamp Couplings (Box couplings) DIN 115 Made from Cast Iron

Material: Grey Cast Iron GG25.

Up to 50 mm bore these two-part couplings are manufactured according to bore tolerance zone V7. For larger bores the fit is U7. All bores have a feather key grove according to DIN 6885/1. Recommended shaft tolerance: f7.

A bearing must be placed right beside both ends of the coupling. Box couplings can be assembled and dismantled in radial direction without moving the shaft in vertical direction.

Version A: For shafts of the same diameter.
Version B: For shafts of different diameter available on request.

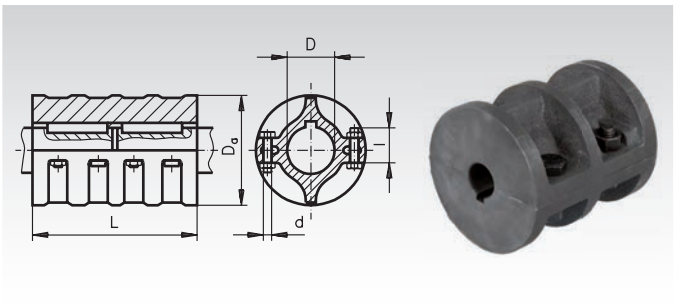

Ordering Details: e.g.: Product No. 600 020 00, clamp Coupling DIN 115 with Keyway

Product No. (with Keyway) Version A	Torque max. Nm	D mm	D_a mm	L mm	Hexagon Screws DIN 931 Amount	Hexagon Screws DIN 931 d x l mm	Speed $n_{max.}$ min^{-1}	Weight kg
600 020 00	25	20	85	100	4	M10 x 30	1700	1,9
600 025 00	40	25	100	130	4	M12 x 40	1500	4,5
600 030 00	60	30	100	130	4	M12 x 40	1500	4,2
600 035 00	80	35	110	160	6	M12 x 50	1420	6,5
600 040 00	100	40	110	160	6	M12 x 50	1420	6,2
600 045 00	125	45	120	190	6	M12 x 50	1350	8,5
600 050 00	150	50	130	190	6	M12 x 50	1300	9
600 055 00	500	55	150	220	6	M16 x 60	1200	13
600 060 00	850	60	150	220	6	M16 x 60	1200	12,5
600 065 00	1250	65	170	250	6	M16 x 60	1120	18,5
600 070 00	1700	70	170	250	6	M16 x 60	1120	17
600 080 00	2500	80	190	280	8	M16 x 60	1060	27
600 090 00	3800	90	215	310	8	M20 x 75	1000	41
600 100 00	5400	100	250	350	8	M20 x 90	920	63

Locking Assemblies (Rigid Couplings) ST-K

Material: Steel.

- For connecting two shafts, as a rigid coupling.
- For medium torques.
- Easy mounting.
- Self-releasing at dismounting.
- No axial movement during mounting.

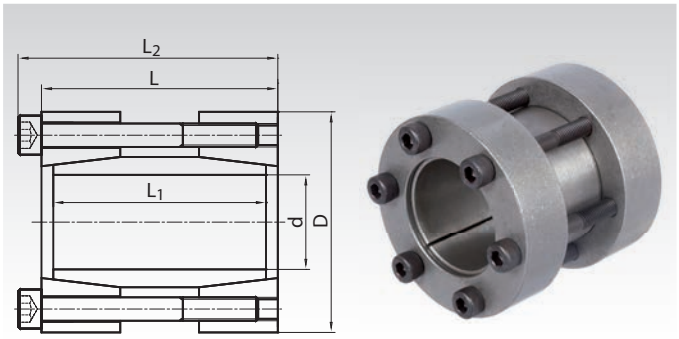

Ordering Details: e.g.: Product No. 615 880 15, Locking Assembly ST-K, 15 mm

Product No.	d mm	D mm	L mm	L_1 mm	L_2 mm	T Nm	F_{ax} kN	P_W N/mm²	Screws 12.9 Number x Size	T_A Nm	Weight kg
615 880 15	15	45	50	44	56	125	16	126	4 x M6	17	0,40
615 880 16	16	45	50	44	56	131	17	117	4 x M6	17	0,40
615 880 17	17	50	50	44	56	210	23	118	4 x M6	17	0,50
615 880 18	18	50	50	44	56	220	24	109	4 x M6	17	0,46
615 880 19	19	50	50	44	56	230	24	96	4 x M6	17	0,50
615 880 20	20	50	50	44	56	240	25	93	4 x M6	17	0,50
615 880 22	22	55	60	54	66	270	25	107	4 x M6	17	0,60
615 880 24	24	55	60	54	66	290	25	96	4 x M6	17	0,60
615 880 25	25	55	60	54	66	470	35	95	6 x M6	17	0,66
615 880 28	28	60	60	54	66	490	35	84	6 x M6	17	0,70
615 880 30	30	60	60	54	66	540	37	79	6 x M6	17	0,73
615 880 32	32	75	60	54	68	730	43	77	4 x M8	41	1,30
615 880 35	35	75	75	69	83	810	45	82	4 x M8	41	1,34
615 880 38	38	75	75	69	83	860	46	75	4 x M8	41	1,30
615 880 40	40	75	75	69	83	880	46	64	4 x M8	41	1,40
615 880 42	42	90	75	69	83	1430	66	65	6 x M8	41	2,0
615 880 45	45	90	85	79	93	1490	66	73	6 x M8	41	2,5
615 880 48	48	90	85	79	93	1640	68	70	6 x M8	41	2,4
615 880 50	50	90	85	79	93	1670	68	64	6 x M8	41	2,0
615 880 55	55	105	85	79	93	2520	90	63	8 x M8	41	3,3
615 880 60	60	105	85	79	93	2760	92	59	8 x M8	41	2,6
615 880 65	65	105	85	79	93	2930	92	53	8 x M8	41	3,0
615 880 70	70	125	100	94	110	3800	106	50	6 x M10	83	5,4
615 880 75	75	125	100	94	110	3850	107	47	6 x M10	83	5,0
615 880 80	80	125	100	94	110	4030	109	65	6 x M10	83	4,7
615 880 85	85	130	100	94	110	4260	121	64	8 x M10	83	5,5
615 880 90	90	135	100	94	110	4820	122	72	8 x M10	83	7,0
615 880 95	95	140	120	114	130	5170	124	67	8 x M10	83	7,5
615 881 00	100	150	120	114	132	5590	127	66	8 x M12	142	7,8

More sizes up to d=110mm for 7,400Nm are available.
Price and delivery time on request.

T = transmittable torque at F_{ax} = 0.
F_{ax} = transmittable axial force at T = 0.
P_W = surface pressure onto the shaft.
T_A = Fastening torque of the screws.

Fit

Shaft h8, Hub H8.
Surface roughness max. 12.5µm.

Mounting

Slightly oil the locking assembly before mounting, do not use molibdenum disulphide or grease. Tighten the screws evenly and crosswise in several steps.

Demounting

Due to the cone angle, the locking assembly is usually released once all screws have been fully unfastened.

Torsionally-Stiff Couplings HU

Material:
Up to D1 = 28 mm hubs made from brass, chromated and passivated.
From D1 = 41.4 mm aluminium alloy with iridite NCP finish.
Torque disc made from black polyacetal.
These unique, zero backlash, general purpose couplings provide electrical insulation. They are designed for the lower torque range and offer generous angular and radial misalignment compensation. Their axial stiffness is unique and they can anchor unrestricted shafts or perform light push/pull duties

Applications: pulse-triggered drive units (e.g. stepper motors, transducers, engine speed sensors, potentiometers).
Temperature range: -20°C to +60°C.

Set-screw style

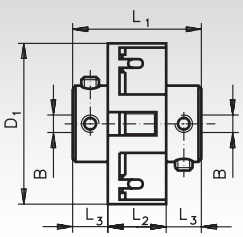



Ordering Details: e.g.: Product No. 601 002 00, Coupling HU, 2 mm Bore

Product No.	Torque max.[2] Nm	Static Break Torque Nm	Bore $B^{+0.03}$ mm	L_1 mm	L_2 mm	L_3 mm	D_1 mm	max. Compensation at 3000min^{-1} [1] Angular ±Degrees	Radial ±mm	Torsional Stiffness Nm/rad	Weight g
601 002 00	0,3	0,9	2	14,2	5,1	4,6	18	2	0,2	25	7
601 003 00	0,3	0,9	3	14,2	5,1	4,6	18	2	0,2	25	7
601 004 00	0,3	0,9	4	14,2	5,1	4,6	18	2	0,2	25	7
601 007 00	1,7	5	3	19,1	6,9	6,1	28	2	0,2	92	16
601 008 00	1,7	5	4	19,1	6,9	6,1	28	2	0,2	92	16
601 009 00	1,7	5	6	19,1	6,9	6,1	28	2	0,2	92	16
601 010 00	1,7	5	8	19,1	6,9	6,1	28	2	0,2	92	16
601 013 00	3,5	10,5	6	28,4	11,2	8,6	41,4	2	0,25	299	30
601 014 00	3,5	10,5	8	28,4	11,2	8,6	41,4	2	0,25	299	30
601 015 00	3,5	10,5	10	28,4	11,2	8,6	41,4	2	0,25	299	30
601 018 00	3,5	10,5	12	28,4	11,2	8,6	41,4	2	0,25	299	30

[1] At lower speeds the couplings can compensate up to +/-1 mm radial and 10° angular displacement.
[2] Operating factors: see coupling HB.

Torsionally-Stiff Couplings HB

Material:
Up to D1 = 28 mm hubs made from brass, chromated and passivated.
From D1 = 41.4 mm aluminium alloy with iridite NCP finish.
Torque disc made from black polyacetal.
These unique, zero backlash, general purpose couplings provide electrical insulation. They are designed for the lower torque range and offer generous angular and radial misalignment compensation. Their axial stiffness is unique and they can anchor unrestricted shafts or perform light push/pull duties

Applications: pulse-triggered drive units (e.g. stepper motors, transducers, engine speed sensors, potentiometers).
Temperature range: -20°C to +60°C.

Clamp style (bore 16 in set-screw style)

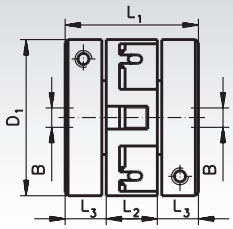



Ordering Details: e.g.: Product No. 601 103 00, Coupling HB, 3 mm Bore

Product No.	Torque max.[2] Nm	Static Break Torque Nm	Bore $B^{+0.03}$ mm	L_1 mm	L_2 mm	L_3 mm	D_1 mm	max. Compensation at 3000min^{-1} [1] Angular ±Degrees	Radial ±mm	Torsional Stiffness Nm/rad	Weight g
601 103 00	0,3	0,9	3	19,1	5,1	7	19,1	2	0,2	25	11
601 104 00	0,3	0,9	4	19,1	5,1	7	19,1	2	0,2	25	11
601 106 00	0,3	0,9	6	19,1	5,1	7	19,1	2	0,2	25	11
601 108 00	1,7	5	4	25,4	6,9	9,3	28	2	0,2	92	26
601 109 00	1,7	5	6	25,4	6,9	9,3	28	2	0,2	92	26
601 110 00	1,7	5	8	25,4	6,9	9,3	28	2	0,2	92	26
601 114 00	3,5	10,5	8	38,1	11,1	13,5	41,4	2	0,25	299	40
601 115 00	3,5	10,5	10	38,1	11,2	13,5	41,4	2	0,25	299	40
601 116 00	3,5	10,5	12	38,1	11,2	13,5	41,4	2	0,25	299	40
601 117 00[3]	3,5	10,5	16[3]	38,1	11,2	13,5	41,4	2	0,25	299	40

[1] At lower speeds the couplings can compensate up to +/-1 mm radial and 10° angular displacement. The sizes D_1 = 19 and D_1 = 28 only 5 degrees.

[2] Operating factors for couplings HU and HB (without shaft displacement):

Load Period	Operating Factor
short term	1
1 hour per day	1.5
3 hours per day	2
6 hours per day	3
12 hours per day	4

Torsionally-Stiff Couplings HZ with Blind Hole

Material: Hubs made from aluminium alloy with iridite NCP finish. Sliding disc made from black polyacetal.

These 3-part zero-backlash couplings provide electrical insulation. They consist of two hubs and a sliding disc. They are versatile and of robust design. Large radial compensation, easy mounting even in confined spaces.

Applications: Ideal for stepper motors due to the damping properties of plastic torque rings. Positioning drives, position encoders and incremental or absolute encoders, pumps etc.

Temperature range: -20°C to +60°C.

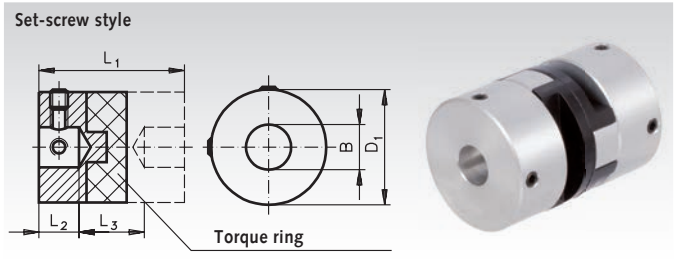

Ordering Details: e.g.: Product No. 601 201 00, Coupling HZ, 2 mm Bore

Product No.	Torque Max.[1] Nm	Static Break Torque Nm	Bore $B^{+0.03}$ mm	L_1 mm	L_2 mm	L_3 mm	D_1 mm	max. Compensation at 3000min^{-1} Angular ±Degrees	Radial ±mm	Torsional Stiffness Nm/rad	Weight g	Product No. Spare Part Sliding disc	Weight g
601 201 00*	0,06	0,7	2	12,7	3,8	5,1	6,4	0,5	0,1	10	2,5	**601 237 00**	0,1
601 202 00*	0,06	0,7	3	12,7	3,8	5,1	6,4	0,5	0,1	10	2,5	**601 237 00**	0,1
601 203 00*	0,21	2	3	12,7	3,8	5,1	9,5	0,5	0,1	30	4	**601 238 00**	0,1
601 204 00*	0,21	2	4	12,7	3,8	5,1	9,5	0,5	0,1	30	4	**601 238 00**	0,1
601 206 00*	0,5	4	3	15,9	4,3	7,3	12,7	0,5	0,1	65	11	**601 239 00**	0,5
601 207 00*	0,5	4	4	15,9	4,3	7,3	12,7	0,5	0,1	65	11	**601 239 00**	0,5
601 208 00*	0,5	4	6	15,9	4,3	7,3	12,7	0,5	0,1	65	11	**601 239 00**	0,5
601 301 00	1,7	8	4	22	6,3	9,4	19,1	0,5	0,2	115	12	**601 242 00**	1,5
601 302 00	1,7	8	6	22	6,3	9,4	19,1	0,5	0,2	115	12	**601 242 00**	1,5
601 303 00	1,7	8	8	22	6,3	9,4	19,1	0,5	0,2	115	12	**601 242 00**	1,5
601 305 00	4	13	6	28,4	8,6	11,2	25,4	0,5	0,2	205	31	**601 244 00**	2,7
601 306 00	4	13	8	28,4	8,6	11,2	25,4	0,5	0,2	205	31	**601 244 00**	2,7
601 307 00	4	13	10	28,4	8,6	11,2	25,4	0,5	0,2	205	31	**601 244 00**	2,7
601 308 00	9	53	8	48	13	22	33,3	0,5	0,2	615	86	**601 246 00**	8
601 309 00	9	53	10	48	13	22	33,3	0,5	0,2	615	86	**601 246 00**	8
601 310 00	9	53	12	48	13	22	33,3	0,5	0,2	615	86	**601 246 00**	8
601 312 00	17	57	10	50,8	16,7	17,4	41,3	0,5	0,25	1200	148	**601 248 00**	12,7
601 313 00	17	57	12	50,8	16,7	17,4	41,3	0,5	0,25	1200	148	**601 248 00**	12,7
601 315 00	17	57	16	50,8	16,7	17,4	41,3	0,5	0,25	1200	148	**601 248 00**	12,7

* Hubs made of brass.

Torsionally-Stiff Couplings HF with Blind Hole

Material: Hubs made from aluminium alloy with iridite NCP finish. Sliding disc made from black polyacetal.

These 3-part zero-backlash couplings provide electrical insulation. They consist of two hubs and a sliding disc.
They are versatile and of robust design. Large radial compensation, easy mounting even in confined spaces.

Applications: Ideal for stepper motors due to the damping properties of plastic torque rings. Positioning drives, position encoders and incremental or absolute encoders, pumps etc.

Temperature range: -20°C to +60°C.

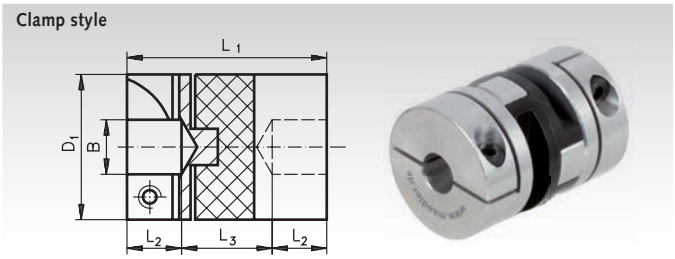

Product No.	Torque max.[1] Nm	Static Break Torque Nm	Bore $B^{+0.03}$ mm	L_1 mm	L_2 mm	L_3 mm	D_1 mm	max. Compensation at 3000min^{-1} Angular ±Degrees	Radial ±mm	Torsional Stiffness Nm/rad	Weight g	Product No. Spare Part Sliding disc	Weight g
601 401 00	1,7	8	4	22	6,3	9,4	19,1	0,5	0,2	115	12	**601 242 00**	1,5
601 402 00	1,7	8	5	22	6,3	9,4	19,1	0,5	0,2	115	12	**601 242 00**	1,5
601 403 00	1,7	8	6	22	6,3	9,4	19,1	0,5	0,2	115	12	**601 242 00**	1,5
601 407 00	4	13	6	28,4	8,6	11,2	25,4	0,5	0,2	205	31	**601 244 00**	2,7
601 408 00	4	13	8	28,4	8,6	11,2	25,4	0,5	0,2	205	31	**601 244 00**	2,7
601 409 00	4	13	10	28,4	8,6	11,2	25,4	0,5	0,2	205	31	**601 244 00**	2,7
601 411 00	9	53	8	48	13	22	33,3	0,5	0,2	615	86	**601 246 00**	8
601 412 00	9	53	10	48	13	22	33,3	0,5	0,2	615	86	**601 246 00**	8
601 413 00	9	53	12	48	13	22	33,3	0,5	0,2	615	86	**601 246 00**	8
601 415 00	17	57	10	50,8	16,7	17,4	41,3	0,5	0,25	1200	148	**601 248 00**	12,2
601 416 00	17	57	12	50,8	16,7	17,4	41,3	0,5	0,25	1200	148	**601 248 00**	12,2
601 418 00	17	57	16	50,8	16,7	17,4	41,3	0,5	0,25	1200	148	**601 248 00**	12,2

[1] Operating factors (without shaft displacement):

Load Period	Operating Factor
short term	1
1 hour per day	2
3 hours per day	4
6 hours per day	6
12 hours per day	8

Torsionally-Stiff Couplings HZD with Through Hole

Material: Hubs made from aluminium alloy with iridite NCP finish. Sliding disc made from black polyacetal.

These 3-part zero backlash couplings provide electrical insulation. They consist of two hubs and a sliding disc.
They are versatile and of robust design. Large radial compensation, easy mounting even in confined spaces.

Applications: Ideal for stepper motors due to the damping properties of plastic torque rings. Positioning drives, position encoders and incremental or absolute encoders, pumps etc.

Set-screw style

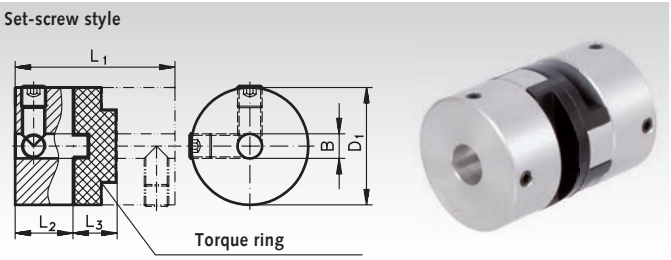

Ordering Details: e.g.: Product No. 601 301 05, Coupling, 4 mm Bore

Product No.	Torque max.[1] Nm	Static Break Torque Nm	Bore $B^{+0.03}$ mm	L_1 mm	L_2 mm	L_3 mm	D_1 mm	max. Compensation at 3000min^{-1} Angular ±Degrees	Radial ±mm	Torsional Stiffness Nm/rad	Weight g	Product No. Spare Part Sliding disc	Weight g
601 301 05	1,7	8	4	26	9,4	7,2	19,1	0,5	0,2	115	13	**601 242 00**	1,5
601 302 05	1,7	8	6	26	9,4	7,2	19,1	0,5	0,2	115	13	**601 242 00**	1,5
601 303 05	1,7	8	8	26	9,4	7,2	19,1	0,5	0,2	115	13	**601 242 00**	1,5
601 305 05	4	13	6	32,4	11,6	9,2	25,4	0,5	0,2	205	31	**601 244 00**	2,7
601 306 05	4	13	8	32,4	11,6	9,2	25,4	0,5	0,2	205	31	**601 244 00**	2,7
601 307 05	4	13	10	32,4	11,6	9,2	25,4	0,5	0,2	205	31	**601 244 00**	2,7
601 308 05	9	53	8	48	15	18	33,3	0,5	0,2	615	74	**601 246 00**	8
601 309 05	9	53	10	48	15	18	33,3	0,5	0,2	615	74	**601 246 00**	8
601 310 05	9	53	12	48	15	18	33,3	0,5	0,2	615	74	**601 246 00**	8
601 312 05	17	57	10	50,8	17,8	15,3	41,3	0,5	0,25	1200	142	**601 248 00**	12,7
601 313 05	17	57	12	50,8	17,8	15,3	41,3	0,5	0,25	1200	142	**601 248 00**	12,7
601 315 05	17	57	16	50,8	17,8	15,3	41,3	0,5	0,25	1200	142	**601 248 00**	12,7
601 318 05	30	95	12	59,6	20,6	18,4	50	0,5	0,25	1375	208	**601 250 00**	20
601 319 05	30	95	16	59,6	20,6	18,4	50	0,5	0,25	1375	208	**601 250 00**	20
601 320 05	30	95	20	59,6	20,6	18,4	50	0,5	0,25	1375	208	**601 250 00**	20
601 325 05	44	150	16	78	28,4	21,2	57,1	0,5	0,25	2610	361	**601 257 00**	30
601 326 05	44	150	20	78	28,4	21,2	57,1	0,5	0,25	2610	361	**601 257 00**	30
601 327 05	44	150	30	78	28,4	21,2	57,1	0,5	0,25	2610	361	**601 257 00**	30

Torsionally-Stiff Couplings HFD with Through Hole

Material: Hubs made from aluminium alloy with iridite NCP finish. Sliding disc made from black polyacetal.

These 3-part zero backlash couplings provide electrical insulation. They consist of two hubs and a sliding disc.
They are versatile and of robust design. Large radial compensation, easy mounting even in confined spaces.

Application: see description HZD (above).

Clamp style

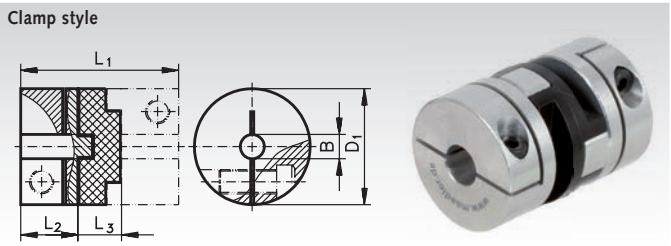

Ordering Details: e.g.: Product No. 601 401 05, coupling, 4 mm Bore

Product No.	Torque Max.[1] Nm	Static Break Torque Nm	Bore $B^{+0.03}$ mm	L_1 mm	L_2 mm	L_3 mm	D_1 mm	max. Compensation at 3000min^{-1} Angular ±Degrees	Radial ±mm	Torsional Stiffness Nm/rad	Weight g	Product No. Spare Part Sliding disc	Weight g
601 401 05	1,7	8	4	26	9,4	7,2	19,1	0,5	0,2	115	13	**601 242 00**	1,5
601 402 05	1,7	8	5	26	9,4	7,2	19,1	0,5	0,2	115	13	**601 242 00**	1,5
601 403 05	1,7	8	6	26	9,4	7,2	19,1	0,5	0,2	115	13	**601 242 00**	1,5
601 407 05	4	13	6	32,4	11,6	9,2	25,4	0,5	0,2	205	31	**601 244 00**	2,7
601 408 05	4	13	8	32,4	11,6	9,2	25,4	0,5	0,2	205	31	**601 244 00**	2,7
601 409 05	4	13	10	32,4	11,6	9,2	25,4	0,5	0,2	205	31	**601 244 00**	2,7
601 411 05	9	53	8	48	15	18	33,3	0,5	0,2	615	74	**601 246 00**	8
601 412 05	9	53	10	48	15	18	33,3	0,5	0,2	615	74	**601 246 00**	8
601 413 05	9	53	12	48	15	18	33,3	0,5	0,2	615	74	**601 246 00**	8
601 415 05	17	57	10	50,8	17,8	15,3	41,3	0,5	0,25	1200	142	**601 248 00**	12,7
601 416 05	17	57	12	50,8	17,8	15,3	41,3	0,5	0,25	1200	142	**601 248 00**	12,7
601 418 05	17	57	16	50,8	17,8	15,3	41,3	0,5	0,25	1200	142	**601 248 00**	12,7
601 420 00	30	95	12	59,6	20,6	18,4	50	0,5	0,25	1375	208	**601 250 00**	20
601 422 00	30	95	16	59,6	20,6	18,4	50	0,5	0,25	1375	208	**601 250 00**	20
601 424 00	30	95	20	59,6	20,6	18,4	50	0,5	0,25	1375	208	**601 250 00**	20
601 430 00	44	150	16	78	28,4	21,2	57,1	0,5	0,25	2610	361	**601 257 00**	30
601 432 00	44	150	20	78	28,4	21,2	57,1	0,5	0,25	2610	361	**601 257 00**	30
601 434 00	44	150	30	78	28,4	21,2	57,1	0,5	0,25	2610	361	**601 257 00**	30

[1] Operating factors (without shaft displacement):

Load Period	Operating Factor
short term	1
1 hour per day	2
3 hours per day	4
6 hours per day	6
12 hours per day	8

Torsionally-Stiff Couplings HZD with Through Hole, Stainless

Material: Hubs made from stainless steel 1.4305.
Torque disc made from black polyacetal.

STAINLESS

These 3-part zero backlash couplings provide electrical insulation. They consist of two hubs and a torque disc. They are versatile and of robust design. Large radial compensation, easy mounting even in confined spaces.

Applications: Ideal for stepper motors due to the damping properties of plastic torque discs. Positioning drives, position encoders such as incremental or absolute encoders , pumps etc.
Temperature range: -20°C to +60°C.

Set-screw style

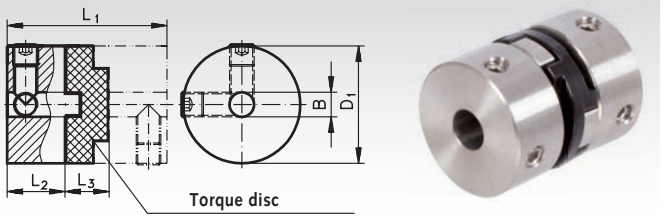

Ordering details: e.g.: Product No. 601 993 05, Coupling, 6 mm bore

Product No.	Torque max.[1] Nm	Static Break Torque Nm	Bore $B^{+0.03}$ mm	L_1 mm	L_2 mm	L_3 mm	D_1 mm	max. displacement at 3000min^{-1} Angular ±Degrees	Radial ±mm	Torsional stiffness Nm/rad	Weight g	Product No. Spare part Torque disc	Weight g
601 993 05	4	13	6	32,4	11,6	9,2	25,4	0,5	0,2	205	76	**601 244 00**	2,7
601 993 06	4	13	8	32,4	11,6	9,2	25,4	0,5	0,2	205	76	**601 244 00**	2,7
601 993 07	4	13	10	32,4	11,6	9,2	25,4	0,5	0,2	205	76	**601 244 00**	2,7
601 993 08	9	53	8	42,0	15,0	12,0	33,3	0,5	0,2	615	165	**601 245 00**	8
601 993 09	9	53	10	42,0	15,0	12,0	33,3	0,5	0,2	615	165	**601 245 00**	8
601 993 10	9	53	12	42,0	15,0	12,0	33,3	0,5	0,2	615	165	**601 245 00**	8
601 993 12	17	57	10	50,8	17,8	15,3	41,3	0,5	0,25	1200	305	**601 248 00**	12,7
601 993 13	17	57	12	50,8	17,8	15,3	41,3	0,5	0,25	1200	305	**601 248 00**	12,7
601 993 15	17	57	16	50,8	17,8	15,3	41,3	0,5	0,25	1200	305	**601 248 00**	12,7
601 993 18	30	95	12	59,6	20,6	18,4	50	0,5	0,25	1375	510	**601 250 00**	20
601 993 19	30	95	16	59,6	20,6	18,4	50	0,5	0,25	1375	510	**601 250 00**	20
601 993 20	30	95	20	59,6	20,6	18,4	50	0,5	0,25	1375	510	**601 250 00**	20

Torsionally-Stiff Couplings HFD with Through Hole, Stainless

Material: Hubs made from stainless steel 1.4305.
Torque disc made from black polyacetal.

STAINLESS

These 3-part zero backlash couplings provide electrical insulation. They consist of two hubs and a torque disc. They are versatile and of robust design. Large radial compensation, easy mounting even in confined spaces.

Applications: see description HZD (above).

Clamp style

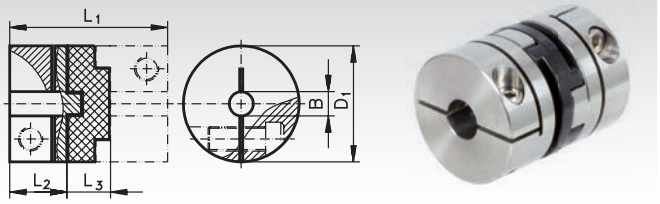

Ordering Details: e.g.: Product No. 601 994 07, Coupling, 6 mm bore

Product No.	Torque max.[1] Nm	Static Break Torque Nm	Bore $B^{+0.03}$ mm	L_1 mm	L_2 mm	L_3 mm	D_1 mm	max. displacement at 3000min^{-1} Angular ±Degrees	Radial ±mm	Torsional stiffness Nm/rad	Weight g	Product No. Spare part Torque disc	Weight g
601 994 07	4	13	6	32,4	11,6	9,2	25,4	0,5	0,2	205	76	**601 244 00**	2,7
601 994 08	4	13	8	32,4	11,6	9,2	25,4	0,5	0,2	205	76	**601 244 00**	2,7
601 994 09	4	13	10	32,4	11,6	9,2	25,4	0,5	0,2	205	76	**601 244 00**	2,7
601 994 11	9	53	8	42,0	15,0	12,0	33,3	0,5	0,2	615	165	**601 245 00**	8
601 994 12	9	53	10	42,0	15,0	12,0	33,3	0,5	0,2	615	165	**601 245 00**	8
601 994 13	9	53	12	42,0	15,0	12,0	33,3	0,5	0,2	615	165	**601 245 00**	8
601 994 15	17	57	10	50,8	17,8	15,3	41,3	0,5	0,25	1200	305	**601 248 00**	12,7
601 994 16	17	57	12	50,8	17,8	15,3	41,3	0,5	0,25	1200	305	**601 248 00**	12,7
601 994 18	17	57	16	50,8	17,8	15,3	41,3	0,5	0,25	1200	305	**601 248 00**	12,7
601 994 20	30	95	12	59,6	20,6	18,4	50	0,5	0,25	1375	510	**601 250 00**	20
601 994 22	30	95	16	59,6	20,6	18,4	50	0,5	0,25	1375	510	**601 250 00**	20
601 994 24	30	95	20	59,6	20,6	18,4	50	0,5	0,25	1375	510	**601 250 00**	20

[1] Operating factors (without shaft displacement):

Load Period	Operating Factor
short term	1
1 hour per day	2
3 hours per day	4
6 hours per day	6
12 hours per day	8



Reworking within 24h-service possible. Custom made parts on request.

Self-Aligning Couplings KA, Short Version

Material: Plastic polyacetal.
Aluminium 2014A.
Stainless steel 1.4305.

- Torsionally rigid design.
- Zero backlash.
- Perfect transmission of torque.
- Very low restoring force.
- Speed max. 5,000 min^{-1}.

Number of screws: at plastic and steel 2 screws on each side.
At aluminium: 1 screw on each side.

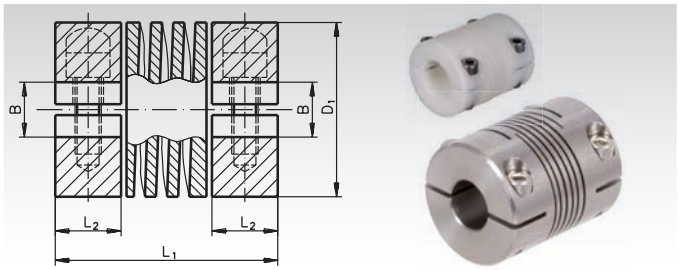

Ordering Details: e.g.: Product No. 602 608 00, Coupling KA, Plastic, Bore 4mm

Product No. Plastic	Product No. Alu	Product No. Stainless Steel	Max. Operating Torque* Plastic Nm	Alu Nm	Stainl. Nm	Bore $B^{+0.03}$ mm	Bore max[1] mm	L_1 mm	L_2** mm	D_1 mm	Angular Misalignment Degrees	Parallel mm	Weight Plastic g	Alu g	Stainl. g
-	-	602 996 00***	-	-	0,45	2	3,00	12,7	3,2	6,35	3	0,07	-	-	2
-	602 702 00	602 996 02	-	0,4	0,5	3	3,18	14,2	4,5	9,52	3	0,1	-	2	6
602 608 00	602 708 00	602 996 08	0,24	0,9	1,0	4	6,00	19,05	6	12,70	5	0,127	2	6	10
602 610 00	602 710 00	602 996 10	0,24	0,9	1,0	6	6,00	19,05	6	12,70	5	0,127	2	6	10
602 612 00	602 712 00	602 996 12	0,35	1,5	1,8	4	6,35	20,3	6	15,87	5	0,127	3	8	22
602 614 00	602 714 00	602 996 14	0,35	1,5	1,8	5	6,35	20,3	6	15,87	5	0,127	3	8	22
602 616 00	602 716 00	602 996 16	0,35	1,5	1,8	6	6,35	20,3	6	15,87	5	0,127	3	8	22
602 620 00	602 720 00	602 996 20	0,64	2,5	2,7	6	8,00	22,85	6,5	19,05	5	0,127	8	12	34
602 622 00	602 722 00	602 996 22	0,64	2,5	2,7	8	8,00	22,85	6,5	19,05	5	0,127	8	12	34
602 624 00	602 724 00	602 996 24	1,4	4,0	6,0	6	11,00	31,75	9	25,40	5	0,127	13	32	90
602 626 00	602 726 00	602 996 26	1,4	4,0	6,0	8	11,00	31,75	9	25,40	5	0,127	13	32	90
602 628 00	602 728 00	602 996 28	1,4	4,0	6,0	10	11,00	31,75	9	25,40	5	0,127	13	32	90
602 630 00	602 730 00	602 996 30	2,5	6,0	10,0	10	14,00	44,45	12	31,75	5	0,127	35	76	220
602 632 00	602 732 00	602 996 32	2,5	6,0	10,0	12	14,00	44,45	12	31,75	5	0,127	35	76	220
602 634 00	602 734 00	602 996 34	2,5	6,0	10,0	16	16,00	44,45	12	31,75	5	0,127	35	76	220

* Please regard the operating factors page 377. ** Shaft can be pushed in further. Middle of coupling is relieved. *** Set-screw style. [1] Against surcharge.

Self-Aligning Couplings LA, Long Version

Material: Plastic polyacetal.
Aluminium 2014A.
Stainless steel 1.4305.

- torsionally rigid design.
- zero backlash.
- perfect transmission of torque.
- very low restoring force.
- speed max. 5,000 min^{-1}.

Number of screws: at plastic and steel 2 screws on each side.
At aluminium up to Ø D_1=31.75mm only 1 screw on each side.

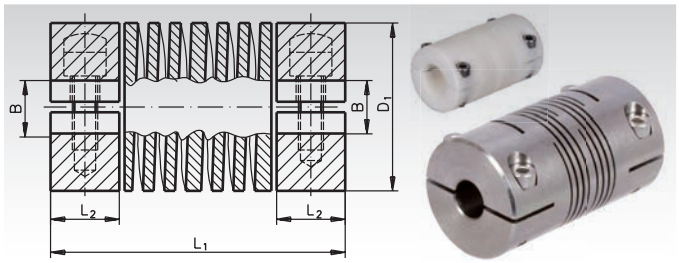

Ordering Details: e.g.: Product No. 602 806 00, Coupling LA, Plastic, Bore 4mm

Product No. Plastic	Product No. Alu	Product No. Stainless Steel	Max. Operating Torque* Plastic Nm	Alu Nm	Stainl. Nm	Bore $B^{+0.03}$ mm	Bore max[1] mm	L_1 mm	L_2** mm	D_1 mm	Angular Misalignment Degrees	Parallel mm	Weight Plastic g	Alu g	Stainl. g
-	602 900 00	602 998 00	-	0,6	0,9	3	4,76	19,55	5,3	9,52	3	0,12	-	4	8
-	602 902 00	602 998 02	-	1	1,5	4	4,76	19,55	5,3	9,52	3	0,12	-	4	8
602 806 00	602 906 00	-	0,51	1,3	-	4	6,35	22,85	6,5	12,7	5	0,17	4	8	-
602 808 00	602 908 00	-	0,32	2	-	6	6,35	22,85	6,5	12,7	5	0,17	4	8	-
-	-	602 998 12	-	-	1,9	4	6,35	25,40	6,5	12,7	5	0,17	-	-	18
-	-	602 998 14	-	-	3	6	6,35	25,40	6,5	12,7	5	0,17	-	-	18
-	602 916 00	-	-	3,4	-	4	8,00	25,40	6,5	15,87	5	0,2	-	10	-
602 818 00	602 918 00	602 998 18	0,61	2	3,4	5	8,00	25,40	6,5	15,87	5	0,2	6	10	30
602 820 00	602 920 00	602 998 20	0,91	3,4	5	6	8,00	25,40	6,5	15,87	5	0,2	6	10	30
602 824 00	602 924 00	-	0,87	3	-	6	10,00	26,50	6,5	19,05	7	0,25	12	16	-
602 826 00	602 926 00	-	1,3	5,3	-	8	10,00	26,50	6,5	19,05	7	0,25	12	16	-
-	-	602 998 30	-	-	4,8	6	10,00	28,00	6,5	19,05	7	0,25	-	-	46
-	-	602 998 32	-	-	8	8	10,00	28,00	6,5	19,05	7	0,25	-	-	46
602 834 00	602 934 00	602 998 34	1,67	5	10	6	12,70	38,10	11	25,4	7	0,38	20	44	115
602 836 00	602 936 00	602 998 36	2,5	10	16	8	12,70	38,10	11	25,4	7	0,38	20	44	115
602 838 00	602 938 00	602 998 38	2,5	10	16	10	12,70	38,10	11	25,4	7	0,38	20	44	115
602 840 00	602 940 00	602 998 40	4	15	25	10	16,00	57,15	16	31,75	7	0,5	58	100	290
602 842 00	602 942 00	602 998 42	4	15	25	12	16,00	57,15	16	31,75	7	0,5	58	100	290
602 844 00	602 944 00	602 998 44	4	15	25	16	16,00	57,15	16	31,75	7	0,5	58	100	290
602 846 00	602 946 00	602 998 46	6	22	36	12	19,00	66,67	18	38,1	7	0,6	86	160	440
602 848 00	602 948 00	602 998 48	6	22	36	16	19,00	66,67	18	38,1	7	0,6	86	160	440
602 850 00	602 950 00	602 998 50	6	22	36	19	19,00	66,67	18	38,1	7	0,6	86	160	440
-	602 954 00	602 998 54	-	30	48	16	22,00	76,20	20,00	44,5	7	0,8	-	240	730
-	602 956 00	602 998 56	-	30	48	19	22,00	76,20	20,00	44,5	7	0,8	-	240	730
-	602 958 00	602 998 58	-	40	37	16	26,00	95,30	25,06	50,8	7	0,9	-	405	1045
-	602 960 00	602 998 60	-	40	73	19	26,00	95,30	25,06	50,8	7	0,9	-	405	1045
-	602 962 00	602 998 62	-	40	73	24	26,00	95,30	25,06	50,8	7	0,93	-	405	1045
-	602 966 00	602 998 66	-	55	102	24	30,00	130,00	32	57,15	7	0,95	-	800	2155
-	602 968 00	602 998 68	-	55	102	30	30,00	130,00	32	57,15	7	0,95	-	800	2155

* Please regard the operating factors page 377. *** Shaft must not be pushed in any further. [1] Against surcharge.

Flexible Couplings EK

Material: Hubs made from zinc die-cast, Spring: Spring steel type C zinc-plated.
These couplings are elastic all-metal couplings, with hubs and spring bodies made from rustproof metal. The couplings only have a one-layer spring body. They are, however, flexible in all directions, suitable for both rotational directions and maintenance-free. They are locked against rotation with Allen set screws.
Temperature range from -40°C to +120°C.
Couplings are available pre-drilled ex stock.
Customized bores and feather-key grooves available at extra charge.

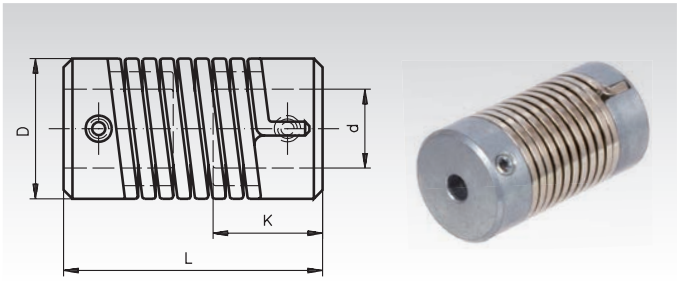

Ordering Details: e.g.: Product No. 602 000 00, Clutch EK, Pre-bored

Product No.	Nominal Torque Nm	Bores d Pilot Bore mm	Bores d max. mm	Bending max. Degree	D mm	K mm	L mm	Speed max. min^{-1}	Weight kg
602 000 00	0,15	2	6	5°	12	9	25	8000	0,014
602 001 00	0,5	3	8	5°	16	12,5	35	3000	0,028
602 002 00	1,5	6	14	5°	26	17	50	3000	0,100

Flexible Couplings EL

Material: Hubs 11 SMn Pb 37, from Ø 55 mm CK45.
Spring: Spring steel type C.

Stainless version: Hub 1.4305.
Spring: Spring steel 1.4310.

STAINLESS

These couplings are elastic all-metal couplings and completely maintenance free. The all-metal design leads to a strong resistance against oil and higher temperatures: -40°C to +100°C. Stainless version: -40°C to +300°C. The elastic part consists of a spring body, made up of three layers of wound springs welded into the connecting hubs. The couplings are suitable for both rotating directions. They can be locked against rotation with a feather key or with pins. The couplings are press-fitted. Demounting is done by pressing or pulling off. Vibrations and shocks are largely absorbed. Depending on the length of the coupling - S, L or Db - bending of 3 - 6° or axial displacement of 3 - 6% of the nominal shaft diameter are possible.

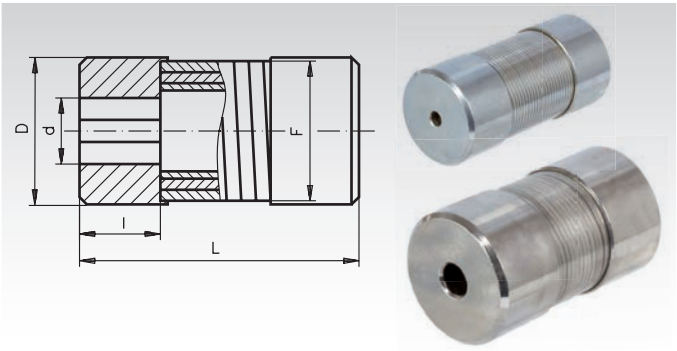

Couplings are available pre-drilled ex stock.
Customized bores and feather-key grooves available at extra charge.

Ordering Details: e.g.: Product No. 602 016 00, Clutch EL, Pre-bored

Product No. Length L short	Product No. Length L short Stainless	Product No. Length L long	Product No. Length L double-length	Nomin. Torque Nm	Bores d Pre-bored mm	Bores d max. for pin mm	Bores d max. for slot mm	Length L S= short mm	Length L L= long mm	Length L Db= double. mm	D mm	F mm	l mm	Speed max. min^{-1}	Weight short kg	Weight long kg	Weight double kg
602 016 00	**602 990 16**	**602 017 00**	**602 018 00**	2,5	2,5	10	6	25	30	35	17	15,5	8	20000	0,032	0,036	0,039
602 005 00	**602 990 05**	**602 006 00**	**602 007 00**	5	3,5	12	8	35	45	50	21	19	10	15000	0,065	0,075	0,08
602 010 00	**602 990 10**	**602 011 00**	**602 012 00**	10	5,5	15	12	50	60	70	26	24	15	12000	0,13	0,15	0,17
602 013 00	**602 990 13**	**602 014 00**	**602 015 00**	10	5,5	19	14	50	60	70	30	28	15	10000	0,17	0,19	0,21
602 020 00	**602 990 20**	**602 021 00**	**602 022 00**	20	5,5	20	16	65	80	90	35	32	20	9000	0,31	0,36	0,39
602 023 00	**602 990 23**	**602 024 00**	**602 025 00**	20	5,5	25	19	65	80	90	38	36	20	8000	0,35	0,40	0,43
602 040 00	**602 990 40**	**602 041 00**	**602 042 00**	40	5,5	27	20	80	95	110	45	40	25	7000	0,65	0,71	0,79
602 043 00	**602 990 43**	**602 044 00**	**602 045 00**	40	5,5	31	24	80	95	110	48	45	25	7000	0,69	0,77	0,85
602 090 00	**602 990 90**	**602 091 00**	**602 092 00**	90	5,5	34	25	100	120	140	55	50	31	6000	1,19	1,34	1,50
602 110 00	**602 991 10**	**602 111 00**	**602 112 00**	90	5,5	35	28	100	120	140	55	52	31	6000	1,14	1,29	1,46
602 150 00	-	**602 151 00**	**602 152 00**	150	5,5	40	30	125	150	175	65	60	37	5000	2,07	2,35	2,65
602 220 00	-	**602 221 00**	**602 222 00**	220	5,5	45	35	150	180	210	75	70	44	4500	3,35	3,87	4,35
602 300 00	-	**602 301 00**	**602 302 00**	300	21	50	40	170	200	240	80	75	50	3000	4,16	4,69	5,39
602 500 00	-	**602 501 00**	**602 502 00**	500	24	64	50	210	250	300	100	95	62	1500	8,08	9,18	10,65



Reworking within 24h-service possible. Custom made parts on request.

Metal Bellow Couplings MBK and MBL

Material: Hubs aluminium, bellow stainless steel.

- Zero backlash, with high torsional stiffness.
- For highly dynamic positioning and servo systems, pumps, portal drives etc..
- With clamps, ready-to-install for rapid mounting.
- Short and long versions with different misalignment values and different stiffnesses.
- Many different sizes and diameters available.

Temperature range: -40°C to +120 °C.

Ordering Details: e.g.: Product No. 601 518 03, Metal Bellow Coupling MBK, 3mm

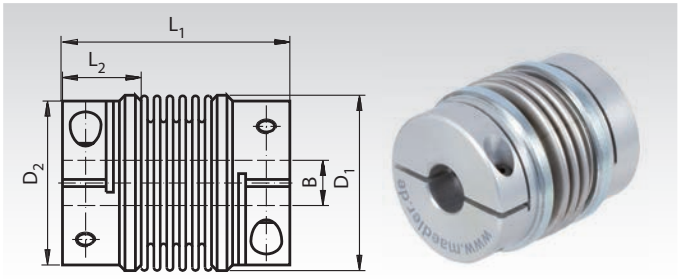

Short Version MBK

Product No.	Torque	Bore $B^{+0.03}$ 1)	Bore max.2)	L_1	L_2	D_1	D_2	maximum Misalignment Angular	Radial	Axial	Recommended max. Speed	Torsional Stiffness	Weight
	max. Nm*	mm	mm	mm	mm	mm	mm	±Degrees	± mm	±mm	min^{-1}	Nm/rad	g
601 518 03	2	3	8	31	11	20	18,2	2	0,06	0,35	5000	315	16
601 518 04	2	4	8	31	11	20	18,2	2	0,06	0,35	5000	315	16
601 518 05	2	5	8	31	11	20	18,2	2	0,06	0,35	5000	315	16
601 518 06	2	6	8	31	11	20	18,2	2	0,06	0,35	5000	315	16
601 518 08	2	8	8	31	11	20	18,2	2	0,06	0,35	5000	315	16
601 523 06	3,2	6	12	37,5	14	26	23,4	2	0,06	0,36	5000	755	34
601 523 08	3,2	8	12	37,5	14	26	23,4	2	0,06	0,36	5000	755	34
601 523 10	3,2	10	12	37,5	14	26	23,4	2	0,06	0,36	5000	755	34
601 523 12	3,2	12	12	37,5	14	26	23,4	2	0,06	0,36	5000	755	34
601 531 08	7,5	8	16	40	14	34	31	2,5	0,1	0,6	5000	1740	56
601 531 10	7,5	10	16	40	14	34	31	2,5	0,1	0,6	5000	1740	56
601 531 12	7,5	12	16	40	14	34	31	2,5	0,1	0,6	5000	1740	56
601 531 14	7,5	14	16	40	14	34	31	2,5	0,1	0,6	5000	1740	56
601 531 16	7,5	16	16	40	14	34	31	2,5	0,1	0,6	5000	1740	56
601 537 10	10	10	20	49,7	18	41	37,4	2,5	0,15	0,8	5000	2880	99
601 537 12	10	12	20	49,7	18	41	37,4	2,5	0,15	0,8	5000	2880	99
601 537 14	10	14	20	49,7	18	41	37,4	2,5	0,15	0,8	5000	2880	99
601 537 16	10	16	20	49,7	18	41	37,4	2,5	0,15	0,8	5000	2880	99
601 537 18	10	18	20	49,7	18	41	37,4	2,5	0,15	0,8	5000	2880	99
601 537 20	10	20	20	49,7	18	41	37,4	2,5	0,15	0,8	5000	2880	99

1) Standard bores. 2) Different bores (even one-sided) up to max bore available against surcharge.

Long Version MBL

Product No.	Torque	Bore $B^{+0.03}$ 1)	Bore max.2)	L_1	L_2	D_1	D_2	maximum Misalignment Angular	Radial	Axial	Recommended max. Speed	Torsional Stiffness	Weight
	max. Nm*	mm	mm	mm	mm	mm	mm	±Degrees	± mm	±mm	min^{-1}	Nm/rad	g
601 618 03	1	3	8	45,2	11	20	18,2	6	0,5	1	5000	170	18
601 618 04	1	4	8	45,2	11	20	18,2	6	0,5	1	5000	170	18
601 618 05	1	5	8	45,2	11	20	18,2	6	0,5	1	5000	170	18
601 618 06	1	6	8	45,2	11	20	18,2	6	0,5	1	5000	170	18
601 618 08	1	8	8	45,2	11	20	18,2	6	0,5	1	5000	170	18
601 623 06	1,6	6	12	54,3	14	26	23,4	6	0,5	1	5000	380	38
601 623 08	1,6	8	12	54,3	14	26	23,4	6	0,5	1	5000	380	38
601 623 10	1,6	10	12	54,3	14	26	23,4	6	0,5	1	5000	380	38
601 623 12	1,6	12	12	54,3	14	26	23,4	6	0,5	1	5000	380	38
601 631 08	3,8	8	16	57	14	34	31	8	1	1,9	5000	915	63
601 631 10	3,8	10	16	57	14	34	31	8	1	1,9	5000	915	63
601 631 12	3,8	12	16	57	14	34	31	8	1	1,9	5000	915	63
601 631 14	3,8	14	16	57	14	34	31	8	1	1,9	5000	915	63
601 631 16	3,8	16	16	57	14	34	31	8	1	1,9	5000	915	63
601 637 10	5	10	20	71,4	18	41	37,4	8	1,2	2,5	5000	1310	107
601 637 12	5	12	20	71,4	18	41	37,4	8	1,2	2,5	5000	1310	107
601 637 14	5	14	20	71,4	18	41	37,4	8	1,2	2,5	5000	1310	107
601 637 16	5	16	20	71,4	18	41	37,4	8	1,2	2,5	5000	1310	107
601 637 18	5	18	20	71,4	18	41	37,4	8	1,2	2,5	5000	1310	107
601 637 20	5	20	20	71,4	18	41	37,4	8	1,2	2,5	5000	1310	107

1) Standard bores. 2) Different bores (even one-sided) up to max bore available against surcharge.

* The maximum torque is calculated for drives with uniform load and constant speed, and without shaft misalignment or axial displacement e.g.:

Counter torque of application = 2 Nm
Operating factor = 3
Required torque = 6 Nm

Select a coupling, with a max. torque larger than 6 Nm. Please note that the max. misalignment values (axial, radial and angular displacement) are mutually exclusive, i.e., if the misalignment in one direction reaches the maximum, the other two remaining misalignments must be at zero.

Operating Factors

Type of Load	Operating Factor
Uniform Load	1.5
Alternating Load	2
Shock load	3
Reversing shock load	4

Fastening torques page 378

Metal Bellow Couplings MCK and MCL

Material: Aluminium clamp hubs, stainless steel bellow.

- Zero backlash, with high torsional stiffness.
- For machine tools, packing machines, textile machines, Linear drives etc..
- With clamps, ready-to-install for rapid mounting.
- Short and long versions with different misalignment values and different stiffnesses.
- Many different sizes and diameters available.

Temperature range: -30°C to +120 °C.

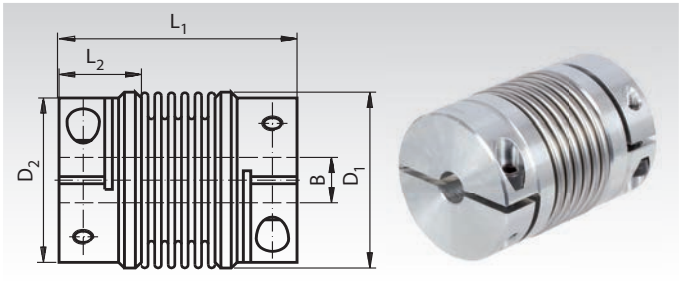

Ordering details: e.g.: Product No. 601 546 10, Metal Bellow Coupling MCK, 10mm

Short version MCK

Product No.	Torque	Bore B^{H7} [1]	Bore max.[2]	$L_1 \pm 2$	L_2	D	Breakdown-Ø [3]	max. misalignment			Recommended max. Speed	Torsional stiffness	Weight approx.
								Angular	Radial	Axial			
	max. Nm	mm	mm	mm	mm	mm	mm	±Degrees	±mm	±mm	min^{-1}	Nm/rad	g
601 546 10	18	10	25,4	63	19,5	45	48	1,5	0,2	0,5	12800	20000	200
601 546 11	18	11	25,4	63	19,5	45	48	1,5	0,2	0,5	12800	20000	200
601 546 14	18	14	25,4	63	19,5	45	48	1,5	0,2	0,5	12800	20000	200
601 546 19	18	19	25,4	63	19,5	45	48	1,5	0,2	0,5	12800	20000	200
601 546 24	18	24	25,4	63	19,5	45	48	1,5	0,2	0,5	12800	20000	200
601 546 25	18	25	25,4	63	19,5	45	48	1,5	0,2	0,5	12800	20000	200
601 556 10	30	10	30	65	24,5	56	-	1,5	0,15	0,6	10300	38000	270
601 556 11	30	11	30	65	24,5	56	-	1,5	0,15	0,6	10300	38000	270
601 556 14	30	14	30	65	24,5	56	-	1,5	0,15	0,6	10300	38000	270
601 556 19	30	19	30	65	24,5	56	-	1,5	0,15	0,6	10300	38000	270
601 556 24	30	24	30	65	24,5	56	-	1,5	0,15	0,6	10300	38000	270
601 556 25	30	25	30	65	24,5	56	-	1,5	0,15	0,6	10300	38000	270
601 566 14	60	14	35	79	29	66	67	1,5	0,15	0,6	8700	75000	500
601 566 19	60	19	35	79	29	66	67	1,5	0,15	0,6	8700	75000	500
601 566 24	60	24	35	79	29	66	67	1,5	0,15	0,6	8700	75000	500
601 566 28	60	28	35	79	29	66	67	1,5	0,15	0,6	8700	75000	500
601 566 32	60	32	35	79	29	66	67	1,5	0,15	0,6	8700	75000	500
601 566 35	60	35	35	79	29	66	67	1,5	0,15	0,6	8700	75000	500

[1] Standard bores. [2] Different bores (even one-sided) up to max bore as well feather keyways, available against surcharge.
[3] Screw head protrudes past D.

Long version MCL

Product No.	Torque	Bore B^{H7} [1]	Bore max.[2]	$L_1 \pm 2$	L_2	D	Breakdown-Ø [3]	max. misalignment			Recommended max. Speed	Torsional stiffness	Weight approx.
								Angular	Radial	Axial			
	max. Nm	mm	mm	mm	mm	mm	mm	±Degrees	±mm	±mm	min^{-1}	Nm/rad	g
601 646 10	18	10	25,4	71	19,5	45	48	2	0,25	0,5	12800	15000	200
601 646 11	18	11	25,4	71	19,5	45	48	2	0,25	0,5	12800	15000	200
601 646 14	18	14	25,4	71	19,5	45	48	2	0,25	0,5	12800	15000	200
601 646 19	18	19	25,4	71	19,5	45	48	2	0,25	0,5	12800	15000	200
601 646 24	18	24	25,4	71	19,5	45	48	2	0,25	0,5	12800	15000	200
601 646 25	18	25	25,4	71	19,5	45	48	2	0,25	0,5	12800	15000	200
601 656 10	30	10	30	73	24,5	56	-	2	0,25	1	10300	28000	270
601 656 11	30	11	30	73	24,5	56	-	2	0,25	1	10300	28000	270
601 656 14	30	14	30	73	24,5	56	-	2	0,25	1	10300	28000	270
601 656 19	30	19	30	73	24,5	56	-	2	0,25	1	10300	28000	270
601 656 24	30	24	30	73	24,5	56	-	2	0,25	1	10300	28000	270
601 656 25	30	25	30	73	24,5	56	-	2	0,25	1	10300	28000	270
601 666 14	60	14	35	89	29	66	67	2	0,25	1	8700	50000	500
601 666 19	60	19	35	89	29	66	67	2	0,25	1	8700	50000	500
601 666 24	60	24	35	89	29	66	67	2	0,25	1	8700	50000	500
601 666 28	60	28	35	89	29	66	67	2	0,25	1	8700	50000	500
601 666 32	60	32	35	89	29	66	67	2	0,25	1	8700	50000	500
601 666 35	60	35	35	89	29	66	67	2	0,25	1	8700	50000	500

[1] Standard bores. [2] Different bores (even one-sided) up to max bore as well feather keyways, available against surcharge.
[3] Screw head protrudes past D.

Tightening torques for the mounting screws

Types MBK and MBL			Types MCK and MCL		
Hub-Ø D_2 mm	Screw size	Fastening Torque Nm	Hub-Ø D mm	Screw size DIN 912	Fastening Torque Nm
18,2	M2,5	1,32	45	M5	8
23,4	M3	2,43	56	M6	12
31	M3	2,43	66	M8	30
37,4	M4	5,66			

Operating factors

Type of Load	Operating factor
Uniform Load	1.5
Alternating Load	2
Shock Load	2.5
Reversing shock load	4

Please note that the max. misalignment values (axial, radial and angular displacement) are mutually exclusive. If the misalignment in one direction reaches the maximum, the other two remaining misalignments must be at zero.

Membrane Couplings, Clamp Style MEM

Materials:

Hubs and sleeves: Aluminium alloy 2011T3 and 2011T8 BS 4300/5 FC1, clear anodised finish.

Membranes: stainless high-quality spring steel.

Screw connection: Screws: heat-treated steel, burnished.

Bushes: Steel zinc-plated and chromated black.

Connecting parts: Heat-treated steel, burnished.

Temperature range: -40°C to +120°C.

Max. speed: 5,000 min^{-1}.

Torsionally-stiff construction, no moving parts, all-metal design, low moment of inertia.

The functional principle offers the highest operational readiness to be achieved with flexible couplings. Excellent kinematic properties and high torsion-spring stiffness. Suitable for servo drives. Tolerant flexural system and a dynamically balanced construction for high-end positioning and servo drives.

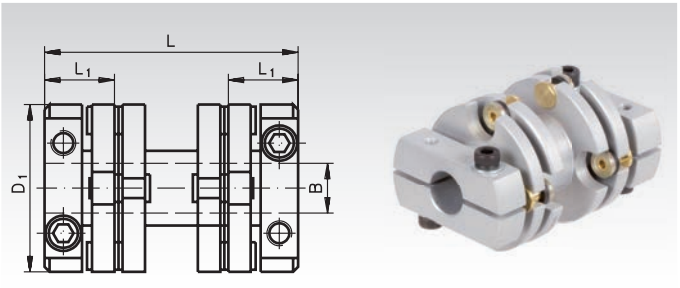

Ordering Details: e.g.: Product No. 601 701 00, Membrane Coupling MEM, 4 mm Bore

Product No.	Torque max.	Bore $B^{+0.03}$	L	L_1*	D_1	max. Misalignment			Torsional Stiffness	Weight
						Angular	Radial	Axial		
	Nm	mm	mm	mm	mm	± Grad	± mm	± mm	Nm/rad	g
601 701 00	0,9	4	34,5	9,2	19,2	4	0,4	0,2	145	14
601 702 00	0,9	5	34,5	9,2	19,2	4	0,4	0,2	145	14
601 703 00	0,9	6	34,5	9,2	19,2	4	0,4	0,2	145	14
601 707 00	2,3	5	36,1	10	25,6	4	0,4	0,2	400	25
601 708 00	2,3	6	36,1	10	25,6	4	0,4	0,2	400	25
601 709 00	2,3	8	36,1	10	25,6	4	0,4	0,2	400	25
601 713 00	5,6	6	50,8	14	33,5	3	0,4	0,2	980	55
601 714 00	5,6	8	50,8	14	33,5	3	0,4	0,2	980	55
601 715 00	5,6	10	50,8	14	33,5	3	0,4	0,2	980	55
601 719 00	11,3	12	60,1	17	41,5	2	0,4	0,2	2020	109
601 720 00	11,3	14	60,1	17	41,5	2	0,4	0,2	2020	109
601 721 00	11,3	16	60,1	17	41,5	2	0,4	0,2	2020	109
601 725 00	30	16	78,1	22,9	52	2	0,4	0,2	4800	247
601 726 00	30	20	78,1	22,9	52	2	0,4	0,2	4800	247
601 729 00	60	20	90,7	26	66	2	0,4	0,2	12000	444
601 730 00	60	28	90,7	26	66	2	0,4	0,2	12000	444

* Depth of bore, remaining length relieved.

Operating Factor

Type of Load	Operating Factor
Uniform	1.5
Alternating	2
Shock	3
Reversing	4

Selection Tool
on the Internet at **www.maedler.de**
in the section **MÄDLER®-Tools**

Curved-Tooth Gear Couplings BW, Polyamide 6.6

Bore tolerance + 0.05/-0.10 mm with feather keyways according to DIN 6885/1.

Largest axial displacement = max. ±1 mm.
Largest angular displacement = max. ±1°.
No radial displacement. The permissible displacement values are dependent on power and speed.

Max. speed: 6000 min^{-1}

Both parts have to be ordered seperately.

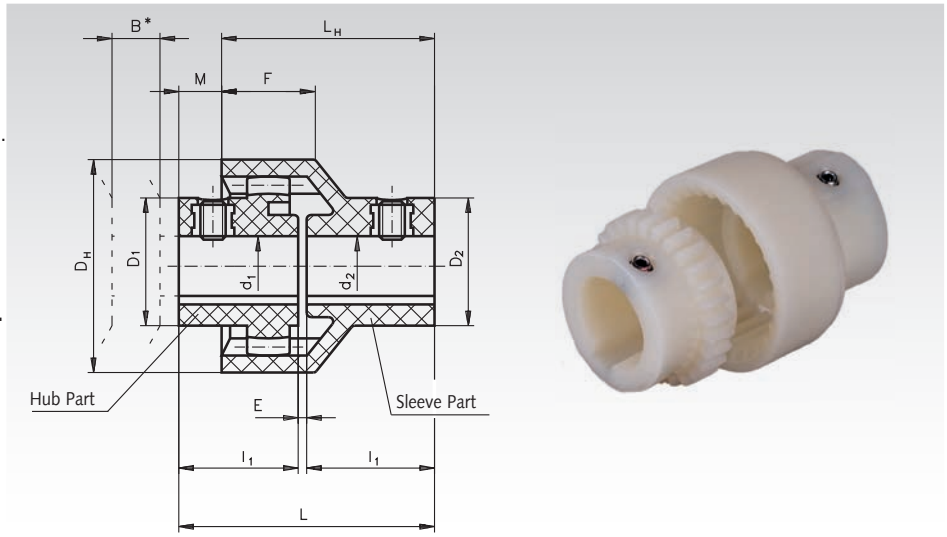

Ordering Details: e.g.:
1 Item Coupling BW, Bore d_1 = 6, d_2 = 10 mm:
1 Item Product No. 607 006 00 Hub Part
1 Item Product No. 606 110 00 Sleeve Part

Product No. Hub	Size	d_1 mm	D_1 mm	Product No. Sleeve	d_2 mm	D_2 mm	Torque normal Nm	Torque peak Nm	D_H mm	B* mm	l_1 mm	E mm	L mm	L_H mm	M mm	F mm	Weight Hub g	Weight Sleeve g
607 006 00	14	6	22	-	-	-	5	10	40	15	23	2	48	40	8	18,5	13,5	-
607 007 00	14	7	22	-	-	-	5	10	40	15	23	2	48	40	8	18,5	13,5	-
607 008 00	14	8	22	-	-	-	5	10	40	15	23	2	48	40	8	18,5	13,5	-
607 009 00	14	9	22	-	-	-	5	10	40	15	23	2	48	40	8	18,5	13,5	-
607 010 00	14	10	23	**606 110 00**	10	25	5	10	40	15	23	2	48	40	8	18,5	13,5	28
607 011 00	14	11	23	**606 111 00**	11	25	5	10	40	15	23	2	48	40	8	18,5	13,5	28
607 012 00	14	12	26	**606 112 00**	12	26	5	10	40	15	23	2	48	40	8	18,5	13,5	28
607 014 00	14	14	26	**606 114 00**	14	26	5	10	40	15	23	2	48	40	8	18,5	13,5	28
607 212 00	19	12	27	-	-	-	8	16	47	16	25	2	52	42	10	19,0	15,5	-
607 214 00	19	14	27	**606 314 00**	14	29	8	16	47	16	25	2	52	42	10	19,0	15,5	32
607 216 00	19	16	30	**606 315 00**	15	29	8	16	47	16	25	2	52	42	10	19,0	15,5	32
607 219 00	19	19	32	**606 319 00**	19	35	8	16	47	16	25	2	52	42	10	19,0	15,5	32
607 410 00	24	10	26	-	-	-	12	24	53	17	26	2	54	45	9	21,5	25	-
607 411 00	24	11	26	-	-	-	12	24	53	17	26	2	54	45	9	21,5	25	-
607 412 00	24	12	26	-	-	-	12	24	53	17	26	2	54	45	9	21,5	25	-
607 414 00	24	14	32	**606 514 00**	14	32	12	24	53	17	26	2	54	45	9	21,5	25	45
607 415 00	24	15	32	-	-	-	12	24	53	17	26	2	54	45	9	21,5	25	-
607 416 00	24	16	32	-	-	-	12	24	53	17	26	2	54	45	9	21,5	25	-
607 418 00	24	18	36	-	-	-	12	24	53	17	26	2	54	45	9	21,5	25	-
607 419 00	24	19	36	**606 519 00**	19	36	12	24	53	17	26	2	54	45	9	21,5	25	45
607 420 00	24	20	36	**606 520 00**	20	36	12	24	53	17	26	2	54	45	9	21,5	25	45
607 424 00	24	24	38	**606 524 00**	24	40	12	24	53	17	26	2	54	45	9	21,5	25	45

* B is the minimum dimension by which a machine part has to be moved in order to demount one of the coupled units in vertical direction.

General

All parts of the couplings are made from plastic (polyamide). This means large wear resistance and excellent resistance to oils, fats, grease, fuels, alcohols, esters, ketones, and grachatic hydrocarbons. But concentrated mineral acids, formic acid, kresol, glycol and benzyl alcohol can - especially at higher temperatures - dissolve polyamide 6.6. The plastics are resistant to condensation and splash water. Operating temperature -25°C to +100°C.

The torque of the couplings is transmitted from the first hub with the toothing via the sleeve part with straight inner toothing onto the second hub. Horizontal as well as vertical shaft connection is possible. The curved-tooth gear couplings BW compensate angular and axial misalignment of the shafts.

When running the coupling in, the outer layer of the plastic teeth is worn away. The resulting flocculent abrasion is not to be interpreted as wear. Simple mounting - no maintenance - low weight - long service life.

Mounting

Align shafts, put feather keys into the keyways, push hub and sleeve part onto the shaft. The set screws can be entered. Now the hub part is pushed that far into the sleeve part, that a gap of 2mm remains between the shaft ends. Then the set screws have to be tightened firmly.

Curved-Tooth Gear Couplings BOZ, Polyamide 6.6

Tolerance of the bore + 0.05/-0.10 mm with feather keyway according to DIN 6885/1.

Largest axial displacement = max. ± 1 mm.
Largest angular displacement = max. ± 1°. per hub part.

Largest radial displacement at 1500 min^{-1}.
Product No. 607 000 00 to 607 200 00 = max. 0.3 mm.
Product No. 607 400 00 = max. 0.35 mm.

The permissible displacement values are dependent on power and speed.

Max. speed: 6,000 min^{-1}.

All 3 parts have to be ordered seperately.

Ordering Details: e.g.:
1 Item Coupling BOZ 5 Nm
Bore d_1 = 8, d_2 = 10 mm:
1 Item Product No. 607 000 00, Sleeve Part
1 Item Product No. 607 008 00, Hub Part d_1
1 Item Product No. 607 010 00, Hub Part d_2

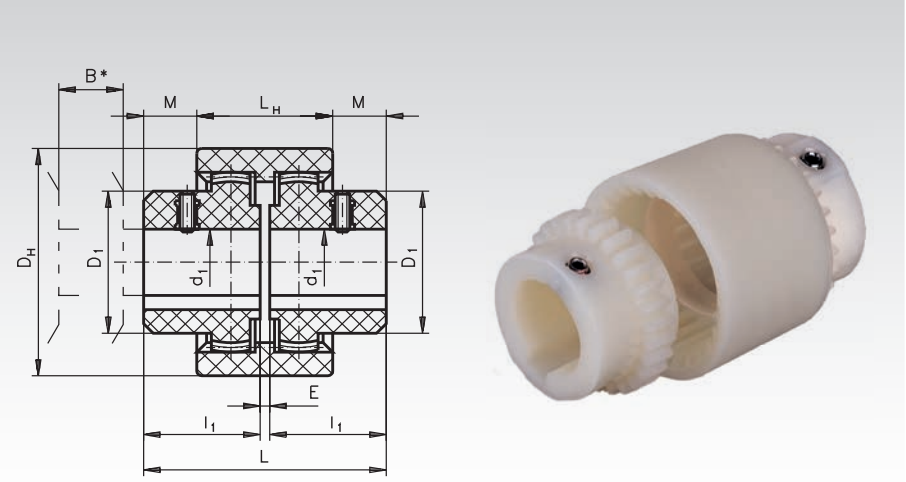

Product No. Hub	Size	d_1 mm	Product No. Sleeve	Torque normal Nm	Torque peak Nm	D_1 mm	D_H mm	B* mm	l_1 mm	E mm	L mm	L_H mm	M mm	Weight Hub g	Weight Sleeve g
607 006 00	14	6	**607 000 00**	5	10	22	40	15	23	4	50	37	6,5	13,5	27
607 007 00	14	7	**607 000 00**	5	10	22	40	15	23	4	50	37	6,5	13,5	27
607 008 00	14	8	**607 000 00**	5	10	22	40	15	23	4	50	37	6,5	13,5	27
607 009 00	14	9	**607 000 00**	5	10	22	40	15	23	4	50	37	6,5	13,5	27
607 010 00	14	10	**607 000 00**	5	10	23	40	15	23	4	50	37	6,5	13,5	27
607 011 00	14	11	**607 000 00**	5	10	23	40	15	23	4	50	37	6,5	13,5	27
607 012 00	14	12	**607 000 00**	5	10	26	40	15	23	4	50	37	6,5	13,5	27
607 014 00	14	14	**607 000 00**	5	10	26	40	15	23	4	50	37	6,5	13,5	27
607 212 00	19	12	**607 200 00**	8	16	27	47	16	25	4	54	37	8,5	15,5	34
607 214 00	19	14	**607 200 00**	8	16	27	47	16	25	4	54	37	8,5	15,5	34
607 216 00	19	16	**607 200 00**	8	16	30	47	16	25	4	54	37	8,5	15,5	34
607 219 00	19	19	**607 200 00**	8	16	32	47	16	25	4	54	37	8,5	15,5	34
607 410 00	24	10	**607 400 00**	12	24	26	53	17	26	4	56	41	7,5	25	40
607 411 00	24	11	**607 400 00**	12	24	26	53	17	26	4	56	41	7,5	25	40
607 412 00	24	12	**607 400 00**	12	24	26	53	17	26	4	56	41	7,5	25	40
607 414 00	24	14	**607 400 00**	12	24	32	53	17	26	4	56	41	7,5	25	40
607 415 00	24	15	**607 400 00**	12	24	32	53	17	26	4	56	41	7,5	25	40
607 416 00	24	16	**607 400 00**	12	24	32	53	17	26	4	56	41	7,5	25	40
607 418 00	24	18	**607 400 00**	12	24	36	53	17	26	4	56	41	7,5	25	40
607 419 00	24	19	**607 400 00**	12	24	36	53	17	26	4	56	41	7,5	25	40
607 420 00	24	20	**607 400 00**	12	24	36	53	17	26	4	56	41	7,5	25	40
607 424 00	24	24	**607 400 00**	12	24	38,5	53	17	26	4	56	41	7,5	25	40

* B is the minimum dimension by which a machine part has to be moved in order to demount one of the coupled units in vertical direction.

General

The couplings BOZ are double-cardanic couplings to compensate radial and angular misalignment.
All parts of the couplings are made from plastic (polyamide) and consist of one sleeve part with 2 internal toothings and 2 hub parts d_1 and d_2 with external toothing.
This means large wear resistance and excellent resistance to oils, fats, grease, fuels, alcohols, esters, ketones, and grachatic hydrocarbons. But concentrated mineral acids, formic acid, kresol, glycol and benzyl alcohol can - especially at higher temperatures - dissolve polyamide 6.6. The plastics are resistant to condensation and splash water. Operating temperature -25°C to +100°C.

When running the coupling in, the outer layer of the plastic teeth is worn away. The resulting flocculent abrasion is not to be interpreted as wear. Simple mounting - no maintenance - low weight - long service life.

Mounting

Align shafts, put feather keys into the keyways, push hub and sleeve part onto the shaft. The set screws can be entered. Now the hub part is pushed that far into the sleeve part, that a gap of 4mm remains between the shaft ends. Then the set screws have to be tightened firmly.

Selection Tool
on the Internet at **www.maedler.de**
in the section **MÄDLER®-Tools**

Curved-Tooth Gear Couplings BOS II made from Polyamide/Sintered Metal

Material: Sleeve part: polyamide 6.6.
Hub parts: sintered metal, burnished.

Bore tolerance H7 with keyways DIN 6885/1 and set screws (2 screws per hub).

Hubs with * are pre-bored, without keyway and without set screw threads.

Axial displacement = max. ± 2 mm per hub.
Angular displacement = max. ± 1° per hub.
Radial displacement = max. 0.3 mm at 1500 min^{-1}.
The permissible displacement values are dependent on power and speed.

Temperature range: -40°C to +80°C,
short time up to +120°C.

All 3 parts have to be ordered seperately.

Other sizes and bores on request.

Ordering Details: e.g. for coupling Size 14, with bore 8mm and bore 10mm:
1 Item Product No. 607 614 08 Hub, size 14, bore 8mm
1 Item Product No. 607 614 10 Hub, size 14, bore 10mm
1 Item Product No. 607 614 00 Sleeve, size 14

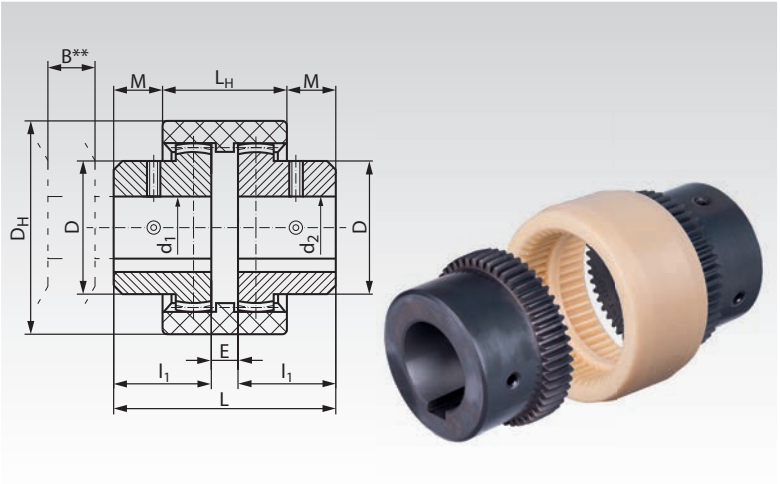

Position of set screws:
1 x on opposite of keyway, 1 x 90° displaced.

Product No. Hub	Size	Hub-bore d_1 / d_2	Product No. Sleeve	Torque normal Nm	Torque peak Nm	Speed max. min^{-1}	D mm	D_H mm	B** mm	l_1 mm	E mm	L mm	L_H mm	M mm	Weight Hub g	Weight Sleeve g
607 614 01*	14	5*	**607 614 00**	12	22	13000	25	41	14	20	9	49	37	6	80	25
607 614 08	14	8	**607 614 00**	12	22	13000	25	41	14	20	9	49	37	6	80	25
607 614 10	14	10	**607 614 00**	12	22	13000	25	41	14	20	9	49	37	6	80	25
607 614 12	14	12	**607 614 00**	12	22	13000	25	41	14	20	9	49	37	6	80	25
607 614 14	14	14	**607 614 00**	12	22	13000	25	41	14	20	9	49	37	6	80	25
607 619 01*	19	10*	**607 619 00**	18	30	11000	32	48	14	21	9	51	37	7	100	35
607 619 10	19	10	**607 619 00**	18	30	11000	32	48	14	21	9	51	37	7	100	35
607 619 12	19	12	**607 619 00**	18	30	11000	32	48	14	21	9	51	37	7	100	35
607 619 14	19	14	**607 619 00**	18	30	11000	32	48	14	21	9	51	37	7	100	35
607 619 15	19	15	**607 619 00**	18	30	11000	32	48	14	21	9	51	37	7	100	35
607 619 16	19	16	**607 619 00**	18	30	11000	32	48	14	21	9	51	37	7	100	35
607 619 19	19	19	**607 619 00**	18	30	11000	32	48	14	21	9	51	37	7	100	35
607 624 01*	24	10*	**607 624 00**	24	36	10000	36	52	13,5	21	13	55	40	7,5	150	35
607 624 12	24	12	**607 624 00**	24	36	10000	36	52	13,5	21	13	55	40	7,5	150	35
607 624 14	24	14	**607 624 00**	24	36	10000	36	52	13,5	21	13	55	40	7,5	150	35
607 624 15	24	15	**607 624 00**	24	36	10000	36	52	13,5	21	13	55	40	7,5	150	35
607 624 16	24	16	**607 624 00**	24	36	10000	36	52	13,5	21	13	55	40	7,5	150	35
607 624 19	24	19	**607 624 00**	24	36	10000	36	52	13,5	21	13	55	40	7,5	150	35
607 624 20	24	20	**607 624 00**	24	36	10000	36	52	13,5	21	13	55	40	7,5	150	35
607 624 24	24	24	**607 624 00**	24	36	10000	36	52	13,5	21	13	55	40	7,5	150	35

* Hubs pre-bored, without keyway, set screw threads and screws.

** B is the minimum dimension by which a machine part has to be moved in order to demount one of the coupled units in vertical direction.

General

When running the coupling in, the outer layer of the plastic teeth is worn away. The resulting flocculent abrasion is not to be interpreted as wear. Simple mounting - no maintenance - low weight - long service life.

Mounting

Align shafts, put feather keys into the shafts, push hubs onto the shafts. Push the hubs into the sleeve part, until you reach length L. The distance between the shafts should be measure E. Then the set screws have to be tightened firmly.

Curved-Tooth Gear Couplings BOS II made from Polyamide/Sintered Metal

Material: Sleeve part: polyamide 6.6.
Hub parts: sintered metal, burnished.

Bore tolerance H7 with keyways DIN 6885/1 and set screws (2 screws per hub).

Hubs with * are pre-bored, without keyway and without set screw threads.

Axial displacement = max. ± 2 mm per hub.
Angular displacement = max. ± 1° per hub.
Radial displacement = max. 0.3 mm at 1500 min^{-1}.
The permissible displacement values are dependent on power and speed.

Temperature range: -40°C to +80°C, short time up to +120°C.

All 3 parts have to be ordered seperately.

Other sizes and bores on request.

Ordering Details: e.g. for coupling Size 28, with bore 14m and bore 15mm:
1 Item Product No. 607 628 14 Hub, size 28, bore 14mm
1 Item Product No. 607 628 15 Hub, size 28, bore 15mm
1 Item Product No. 607 628 00 Sleeve, size 28

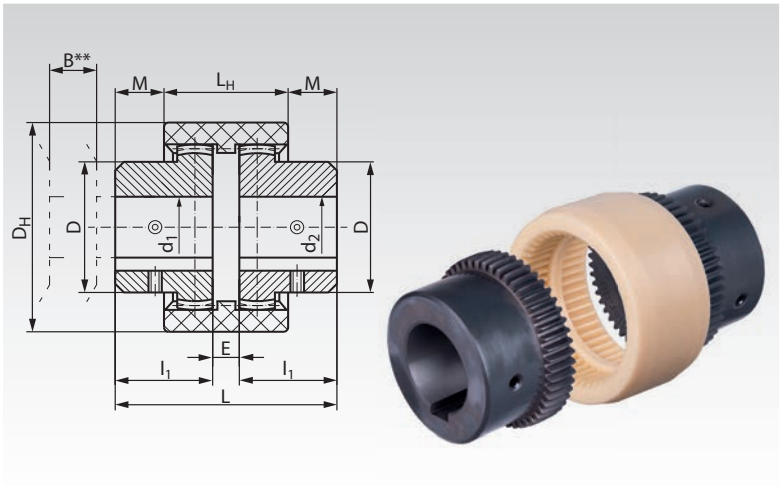

Position of set screws:
1 x on keyway, 1 x 90° displaced.

Product No. Hub	Size	Hub-bore d_1 / d_2	Product No. Sleeve	Torque normal Nm	Torque peak Nm	Speed max. min^{-1}	D mm	D_H mm	B** mm	l_1 mm	E mm	L mm	L_H mm	M mm	Weight Hub g	Weight Sleeve g
607 628 01*	28	6*	**607 628 00**	48	85	8000	44	67	16,5	35	13	83	46	18,5	380	70
607 628 14	28	14	**607 628 00**	48	85	8000	44	67	16,5	35	13	83	46	18,5	380	70
607 628 15	28	15	**607 628 00**	48	85	8000	44	67	16,5	35	13	83	46	18,5	380	70
607 628 16	28	16	**607 628 00**	48	85	8000	44	67	16,5	35	13	83	46	18,5	380	70
607 628 18	28	18	**607 628 00**	48	85	8000	44	67	16,5	35	13	83	46	18,5	380	70
607 628 19	28	19	**607 628 00**	48	85	8000	44	67	16,5	35	13	83	46	18,5	380	70
607 628 20	28	20	**607 628 00**	48	85	8000	44	67	16,5	35	13	83	46	18,5	380	70
607 628 22	28	22	**607 628 00**	48	85	8000	44	67	16,5	35	13	83	46	18,5	380	70
607 628 24	28	24	**607 628 00**	48	85	8000	44	67	16,5	35	13	83	46	18,5	380	70
607 628 25	28	25	**607 628 00**	48	85	8000	44	67	16,5	35	13	83	46	18,5	380	70
607 632 01*	32	12*	**607 632 00**	65	110	7300	50	76	17	35	13	83	47	18	500	90
607 632 19	32	19	**607 632 00**	65	110	7300	50	76	17	35	13	83	47	18	500	90
607 632 20	32	20	**607 632 00**	65	110	7300	50	76	17	35	13	83	47	18	500	90
607 632 22	32	22	**607 632 00**	65	110	7300	50	76	17	35	13	83	47	18	500	90
607 632 24	32	24	**607 632 00**	65	110	7300	50	76	17	35	13	83	47	18	500	90
607 632 25	32	25	**607 632 00**	65	110	7300	50	76	17	35	13	83	47	18	500	90
607 638 01*	38	12*	**607 638 00**	95	170	6500	58	84	17,5	35	13	83	48	17,5	650	105
607 638 19	38	19	**607 638 00**	95	170	6500	58	84	17,5	35	13	83	48	17,5	650	105
607 638 20	38	20	**607 638 00**	95	170	6500	58	84	17,5	35	13	83	48	17,5	650	105
607 638 22	38	22	**607 638 00**	95	170	6500	58	84	17,5	35	13	83	48	17,5	650	105
607 638 25	38	25	**607 638 00**	95	170	6500	58	84	17,5	35	13	83	48	17,5	650	105
607 638 30	38	30	**607 638 00**	95	170	6500	58	84	17,5	35	13	83	48	17,5	650	105
607 642 01*	42	12*	**607 642 00**	115	220	6200	68	93	17,5	38	14	90	49	20,5	930	130
607 642 25	42	25	**607 642 00**	115	220	6200	68	93	17,5	38	14	90	49	20,5	930	130
607 642 30	42	30	**607 642 00**	115	220	6200	68	93	17,5	38	14	90	49	20,5	930	130
607 642 35	42	35	**607 642 00**	115	220	6200	68	93	17,5	38	14	90	49	20,5	930	130
607 642 38	42	38	**607 642 00**	115	220	6200	68	93	17,5	38	14	90	49	20,5	930	130
607 648 01*	48	12*	**607 648 00**	160	300	5500	68	98	19	45	11	101	49	26	1100	160
607 648 30	48	30	**607 648 00**	160	300	5500	68	98	19	45	11	101	49	26	1100	160
607 648 35	48	35	**607 648 00**	160	300	5500	68	98	19	45	11	101	49	26	1100	160
607 648 38	48	38	**607 648 00**	160	300	5500	68	98	19	45	11	101	49	26	1100	160
607 648 40	48	40	**607 648 00**	160	300	5500	68	98	19	45	11	101	49	26	1100	160

* Hubs pre-bored, without keyway, set screw threads and screws.

** B is the minimum dimension by which a machine part has to be moved in order to demount one of the coupled units in vertical direction.

General

Simple mounting - no maintenance - long service life.
When running the coupling in, the outer layer of the plastic teeth is worn away. The resulting flocculent abrasion is not to be interpreted as wear.

Mounting

Align shafts, put feather keys into the shafts, push hubs onto the shafts. Push the hubs into the sleeve part, until you reach length L. The distance between the shafts should be measure E. Then the set screws have to be tightened firmly.

Chain Couplings with Casing

Material: Chain wheels made from steel, teeth hardened.
Chain with clip link made from steel.
Casing made from aluminium, yellow painted,
with o-ring-seals.

- Elastic transmission of torque.
- Compensation of large shaft disalignment.
- Fast declutching by simply loosening the chain.
- Axial shaft movement is allowed.
- Not for strong shocks recommend.

The chain wheels are pre-bored. Customized bores, featherkeys and setscrew threads against extra charge.
At mounting, the casing has to be filled with grease.
Temperature range: -30°C to +120°C.

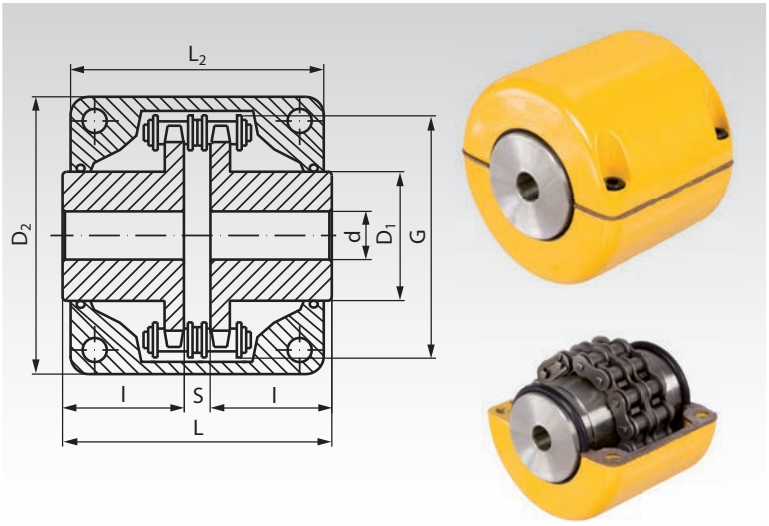

Ordering Details: e.g.: Product No. 140 330 12, Chain Coupling Type 3012

Product No. Coupling complete	Type	Chain-size DIN	Torque Nom. Nm	Torque Peak Nm	Speed max. min^{-1}	d mm	$d_{max.}$ mm	D_1 mm	D_2 mm	G mm	L mm	L_2 mm	l mm	s mm	Weight kg	Product No. spare part Chain	Weight kg
140 330 12	3012	06 B-2	45	190	5000	12	16	27,2	69	45	65,0	63	29,5	6,0	0,53	**140 331 12**	0,09
140 340 12	4012	08 A-2	110	249	4800	12	22	36	77	62	79,4	72	36,0	7,4	1,03	**140 341 12**	0,18
140 340 14	4014	08 A-2	150	329	4800	12	28	45	84	69	79,4	75	36,0	7,4	1,43	**140 341 14**	0,21
140 340 16	4016	08 A-2	180	419	4800	13,5	32	51,5	92	77	87,4	75	40,0	7,4	1,85	**140 341 16**	0,24
140 350 14	5014	10 A-2	250	620	3600	14,5	35	56	101	86	99,7	85	45,0	9,7	2,62	**140 351 14**	0,43
140 350 16	5016	10 A-2	300	791	3600	14,5	40	64	111	96	99,7	85	45,0	9,7	3,25	**140 351 16**	0,49
140 350 18	5018	10 A-2	380	979	3000	16	45	73,5	122	106	99,7	85	45,0	9,7	4,20	**140 351 18**	0,55
140 360 18	6018	12 A-2	630	1810	2500	20	56	89,5	147	127	123,5	105	56,0	11,5	7,75	**140 361 18**	0,99
140 360 20	6020	12 A-2	770	2210	2500	20	60	102,5	160	139	123,5	105	56,0	11,5	9,58	**140 361 20**	1,11

Chain Couplings

Material: Steel, with double-strand chain DIN 8187.

The couplings are delivered assembled or unassembled.
The chain is packed separately. Number of teeth = 18.

- Elastic transmission of torque.
- Compensation of large shaft disalignment.
- Fast declutching by simply loosening the chain.
- Axial shaft movement is allowed.
- Not for strong shocks recommend.

The chain wheels are pre-bored. Customized bores, featherkeys and setscrew threads against extra charge.

Temperature range: -30°C to +220°C.

Ordering Details: e.g.: Product No. 140 301 00, Chain Coupling 06 B-2

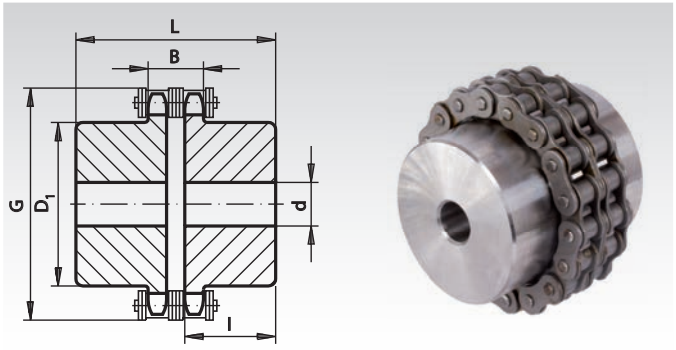

Product No.	DIN-ISO	Nominal* Torque Nm	Moment of Inertia mD^2 kgm^2	P/n* max. kW/min^{-1}	n max. min^{-1}	d min. mm	D_1 Ø mm	l mm	B mm	Max. Space required G mm	Max. Space required L mm	Weight kg
140 301 00	06 B-2	95	0,00117	0,0097	6000	12	45	25	15,2	63,9	55	0,78
140 304 00	08 B-2	240	0,00474	0,0246	5500	15	60	32	20,7	86	71	1,83
140 308 00	10 B-2	380	0,013	0,039	4500	15	75	35	25	107	78	3,21
140 312 00	12 B-2	600	0,0301	0,0616	3000	25	90	40	29,5	126,5	89,5	4,97
140 316 00	16 B-2	1480	0,158	0,1519	2500	30	120	60	46,7	170	137	12,30

* Selection according to the ratio of driving power to speed (P/n), the nominal torque must not be exceeded (incl. operating factor).



Reworking within 24h-service possible. Custom made parts on request.

Elastic Couplings MU

Material: The two halves of the coupling are made from magnesium alloy. Insert made from neoprene.

These couplings are particularly suited for pump drives, requiring high torque combined with a low-weight coupling. The two halves of the coupling are made from special magnesium alloy. This keeps the weight of the coupling down. The insert, made from neoprene, elastically assimilates shock loads. The rim of the neoprene insert automatically leads to the correct axial clearance. Its sealing property also means that the coupling does not need to be protected, even in dusty environments.
No frictional corrosion, i.e., easy disassembly even after longterm use. The two halves of the coupling offer full electric insulation.

Couplings are available pre-drilled ex stock.
Customized bores and feather-key grooves available at extra charge.

Temperature range: -30°C to +120°C.

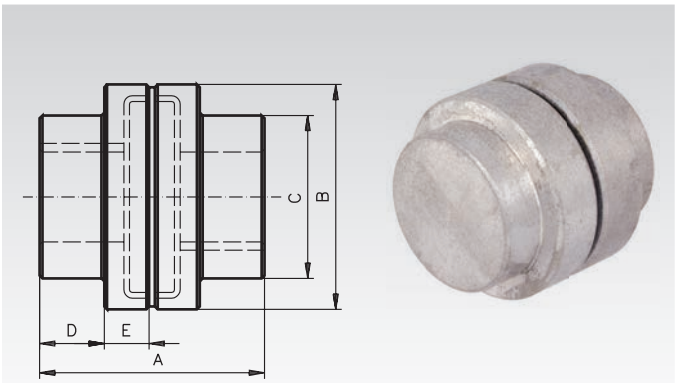

Ordering Details: e.g.: Product No. 603 022 00, Coupling MU, without Bore

Product No.	Torque nominal Nm	Torque max. Nm	max. Speed min^{-1}	Bores pre-bored mm	Bores max. mm	A mm	B mm	C mm	D mm	E mm	Distance between Shaft Ends min. mm	Distance between Shaft Ends max. mm	Weight kg
603 022 00	38,5	150	23100	-	22	66	66	51	14	17	1,6	19	0,34
603 028 00	45	200	19900	-	28	79	74	57	17	21	1,6	22	0,45
603 038 00	79	380	15800	-	38	92	88	74	20	24	1,6	22	0,9
603 044 00	119	600	14700	-	44	109	102	77	26	27	1,6	28,6	1,36
603 057 00	248	800	11200	-	57	120	122	102	27	31	1,6	32	1,8
603 064 00	559	1580	9800	-	64	152	152	114	41	34	1,6	35	3,17
603 073 00	1315	2500	8600	-	73	180	175	132	53	33	1,6	47,6	5,4

Product No. of coupling	**Product No. Spare Part Insert**	Weight g
603 022 00	**603 122 00**	20
603 028 00	**603 128 00**	46
603 038 00	**603 138 00**	50
603 044 00	**603 144 00**	60

Product No. of coupling	**Product No. Spare Part Insert**	Weight g
603 057 00	**603 157 00**	70
603 064 00	**603 164 00**	80
603 073 00	**603 173 00**	90



Highly Elastic Couplings PU

Materials: Polyester, hubs either zinc plated steel or stainless steel 1.4305.

STAINLESS

These torsionally-stiff couplings made in one-part from flexible plastic are easily mounted.

They show very good chemical resistance against acids, bases, solvents, greases and oils. They have a very high tear resistance, are highly flexible at low temperatures, have good shock and vibration damping properties and are corrosion resistant.

Max. speed: 3000 min^{-1}.
Temperature range: -40°C to +100°C.

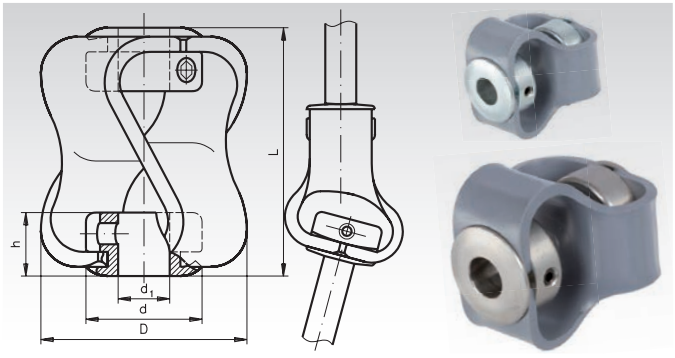

Ordering Details: e.g.: Product No. 603 201 00, Highly Elastic Coupling PU, zinc-plated

Product No. zinc-plated	**Product No.** stainless	torque[1] Nm	Bore[2] d_1 +0,03 mm	Ø D mm	max. Length L mm	Hub-Ø d mm	Hub Length h mm	max. Misalignment Angular Degrees	max. Misalignment Radial mm	max. Misalignment Axial mm	Screw size	Weight g
603 201 00	**603 992 01**	0,5 (0,8)	6 (10)	27	27	18	7,9	10	2,6	4,5	M3	25
603 202 00	**603 992 02**	1,8 (3)	10 (12,7)	48	48	25	12,7	15	3,2	7,5	M4	92
603 205 00	**603 992 05**	5 (8)	12 (16)	54	55	28	16	15	3,2	8,5	M5	124
603 210 00	**603 992 10**	10 (18)	14 (16)	56	56	28	16	15	3,2	11	M6	136

[1] Max. torque at max. shaft displacement. The bracketed values are valid for a shaft displacement of 1°, 0.5mm radial and 2mm axial.
[2] Standard bore. Other bore sizes on request. Bracketed values: Max. possible bores.



Reworking within 24h-service possible. Custom made parts on request.

Elastic Couplings RN

Material: Hubs made from aluminium, plastic spider (insert) made from polyurethane, shore hardness 92° (yellow).

Spare part plastic insert available in 92° an 98° Shore (red).

Couplings are available undrilled or pre-drilled ex stock.

Customized bores and feather-key grooves available at extra charge.

Temperature range: -40°C to +90°C.

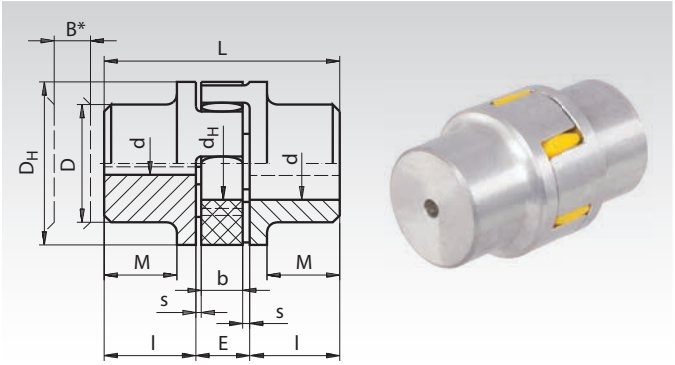

Ordering Details: e.g.: Product No. 605 197 00, Coupling RN

Product No.	Size	Torque nominal. Nm	Torque max. Nm	Bores d pre-drilled mm	Bores d max. mm	max. Speed at 30m/s min^{-1}	Torsional Angle at max. Nm	B* mm	l mm	E mm	s mm	b mm	L mm	M mm	D_H mm	D mm	d_H mm	Weight[1] kg
605 197 00	7	1,12	2,24	-	6,35	40000	2°	7	7	8	1	6	22	-	14	14	-	0,007
605 198 00	9	2,93	6	-	9	28000	2°	9	10	10	1	8	30	-	20	20	7	0,017
605 199 00	14	7,5	15	-	15	19000	10°	11	11	13	1,5	10	35	-	30	30	10	0,05
605 200 00	19	10	20	5,0	19	14000	5°	13	25	16	2	12	66	20	40	32	18	0,15
605 201 00	24	35	70	7,0	24	10600	5°	15	30	18	2	14	78	24	55	40	27	0,27
605 202 00	28	95	190	9,0	28	8500	5°	16	35	20	2,5	15	90	28	65	48	30	0,46
605 203 00	38	190	380	13,6	38	7100	5°	19	45	24	3	18	114	37	80	66	38	0,98
605 204 00	42	265	530	20,0	42	6000	5°	21	50	26	3	20	126	40	95	75	46	1,15
605 205 00	48	310	620	20,0	48	5600	5°	22	56	28	3,5	21	140	45	105	85	51	1,95

* B is the average dimension by which, e.g., a driven or driving machine has to be moved in order to demount one of the coupled units in radial direction.
[1] Weights refer to max. customized bore without keyways.

Matches coupling Product No.	Size	**Product No.** Spare Part Spider 92° Shore, yellow	Torque nominal Nm	Torque max. Nm	**Product No.** Optional Spider 98° Shore, red	Torque Nominal Nm	Torque max. Nm	Weight g
605 197 00	7	**605 192 07****	1,12	2,24	**–**	–	–	0,7
605 198 00	9	**605 192 09****	2,93	5,86	**–**	–	–	1,8
605 199 00	14	**605 092 14**	7,5	15	**605 098 14**	12,5	25	5
605 200 00	19	**605 092 19**	10	20	**605 098 19**	17	34	7
605 201 00	24	**605 092 24**	35	70	**605 098 24**	60	120	22
605 202 00	28	**605 092 28**	95	190	**605 098 28**	160	320	32
605 203 00	38	**605 092 38**	190	380	**605 098 38**	325	650	58
605 204 00	42	**605 092 42**	265	530	**605 098 42**	450	900	70
605 205 00	48	**605 092 48**	310	620	**605 098 48**	525	1050	98

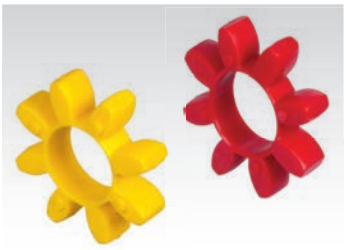

Spare part spiders page 391

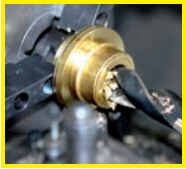

Reworking within 24h-service possible. Custom made parts on request.

Elastic Couplings RNG

Material: Coupling hubs: Grey Cast Iron GJL25.
Spider (insert): Polyurethane, hardness 92°A Shore (yellow).

Spare part plastic spider available in 92°A (yellow), 98°A (red) or 64°D (green).

Couplings are pre-bored ex stock.

Customized bores and feather-key grooves available at extra charge.

Temperature range: -40°C to +90°C.

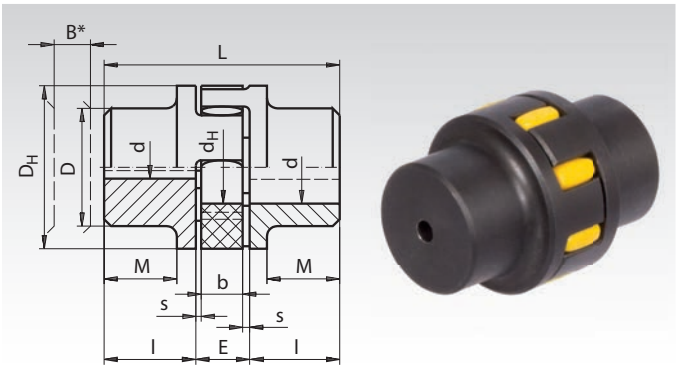

Ordering Details: e.g.: Product No. 605 300 00, Coupling RNG

Product No.	Size	Torque nominal Nm	Torque max. Nm	Bores d pre-drilled mm	Bores d max. mm	max. Speed at 30m/s min^{-1}	Torsional Angle at max. Nm	B* mm	l mm	E mm	s mm	b mm	L mm	M mm	D_H mm	D mm	d_H mm	Weight[1] kg
605 300 00	19	10	20	5	19	14000	5	13	25	16	2,0	12	66	20	40	32	18	0,41
605 301 00	24	35	70	7	24	10600	5	15	30	18	2,0	14	78	24	55	40	27	0,73
605 302 00	28	95	190	9	28	8500	5	16	35	20	2,5	15	90	28	65	48	30	1,24
605 303 00	38	190	380	13	38	7100	5	19	45	24	3,0	18	114	37	80	66	38	2,1
605 304 00	42	265	530	13	42	6000	5	21	50	26	3,0	20	126	40	95	75	46	3,2
605 305 00	48	310	620	16	48	5600	5	22	56	28	3,5	21	140	45	105	85	51	4,4
605 307 00	55	410	820	16	55	4750	5	23	65	30	4,0	22	160	52	120	98	60	6,6
605 308 00	65	625	1250	18	70	4250	5	27	75	35	4,5	26	185	61	135	115	68	10,1
605 309 00	75	1280	2560	25	80	3550	5	32	85	40	5,0	30	210	69	160	135	80	16,0
605 310 00	90	2400	4800	29	97	2800	5	36	100	45	5,5	34	245	81	200	160	100	27,5
605 311 00	100	3300	6600	29	115	2500	5	40	110	50	6,0	38	270	89	225	180	113	34,5

* B is the average dimension by which, e.g., a driven or driving machine has to be moved in order to demount one of the coupled units in radial direction.

[1] Weights refer to max. customized bore without keyways.

Spare part spiders page 391

Elastic Couplings RNI, Stainless Steel

Material: Coupling hubs: Stainless steel 1.4305.
Spider (insert): Polyurethane, hardness 92°A Shore (yellow).

STAINLESS

Spare part plastic spider available in 92°A (yellow), 98°A (red) or 64°D (green).

Couplings are pre-bored ex stock.

Custom bores or feather keyways available at extra charge.

Temperature range: -20°C to +80°C.

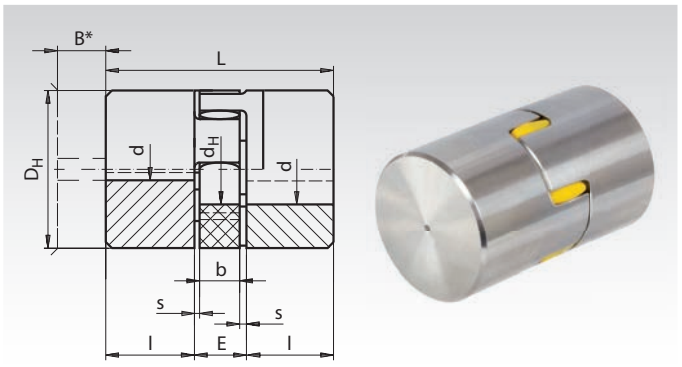

Ordering Details: e.g.: Product No. 605 992 00, Coupling RNI, without Bore

Product No.	Size	Torque nominal Nm	Torque peak Nm	d mm	d max. mm	max. Speed at 30 m/s min^{-1}	Torsional angle at max. Nm Degrees	B* mm	l mm	E mm	s mm	b mm	L mm	D_H mm	d_H mm	Weight kg
605 992 00	19	10	20	-	25	14000	5	13	25	16	2,0	12	66	40	18	0,44
605 992 01	24	35	70	-	35	10600	5	15	30	18	2,0	14	78	55	27	0,78
605 992 02	28	95	190	-	40	8500	5	16	35	20	2,5	15	90	65	30	1,33
605 992 03	38	190	380	-	48	7100	5	19	45	24	3,0	18	114	80	38	2,84
605 992 04	42	265	530	-	55	6000	5	21	50	26	3,0	20	126	95	46	3,34
605 992 05	48	310	620	-	62	5600	5	22	56	28	3,5	21	140	105	51	5,66

* B is the average dimension by which, e.g., a driven or driving machine has to be moved in order to demount one of the coupled units in radial direction.

[1] Weights refer to max. customized bore without keyways.

Spare part spiders page 391

Operating Instructions at www.maedler.de in the section Downloads

Elastic Couplings RNT for Taper Bushes

Material: Coupling hubs: Grey Cast Iron GJL25.
Spider (insert): Polyurethane, hardness 92°A or 98°A Shore.

Two coupling hubs combined with an insert and two taper bushes make up a ready-to-install elastic coupling. **All components have to be ordered separately.** This means accessibility (mounting from the inside or outside) and various bore diameters can be chosen. Temperature range: -20°C to +80°C.

Design IS: Mounting of bush from inside.
Design AS: Mounting of bush from outside.

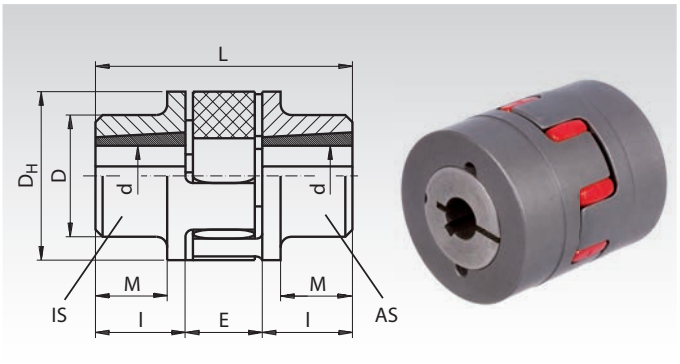

Ordering Details: e.g.: Product No. 605 201 01, Coupling Hub RNT, Version IS
605 201 01, Coupling Hub RNT, Version AS
605 092 24, Spider
and two matching Clamping Bushes 2x 622 501...

Hubs for Couplings RNT

Product No. Coupling hub	Hub version	Size	Nominal Torque 92 Sh Nm	Nominal Torque 98 Sh Nm	D_H mm	D mm	L mm	l mm	M mm	E mm	Bore d min. mm	Bore d max. mm	Bush No.	Speed max. at V=40 m/s min^{-1}	Weight kg
605 201 01	IS	24	35	60	55	55	64	23	-	18	9	25	1008	14000	0,4
605 201 02	AS	24	35	60	55	55	64	23	-	18	9	25	1008	14000	0,4
605 202 01	IS	28	95	160	65	65	66	23	-	20	9	28	1108	11800	0,6
605 202 02	AS	28	95	160	65	65	66	23	-	20	9	28	1108	11800	0,6
605 203 01	IS	38	190	325	80	78	70	23	15	24	9	28	1108	9500	0,9
605 203 02	AS	38	190	325	80	78	70	23	15	24	9	28	1108	9500	0,9
605 204 01	IS	42	265	450	95	94	78	26	16	26	12	42	1610	8000	1,5
605 204 02	AS	42	265	450	95	94	78	26	16	26	12	42	1610	8000	1,5
605 205 01	IS	48	310	525	105	104	106	39	28	28	12	42	1615	7100	2,6
605 205 02	AS	48	310	525	105	104	106	39	28	28	12	42	1615	7100	2,6
605 206 01	IS	55	410	685	120	118	96	33	20	30	12	50	2012	6300	2,8
605 206 02	AS	55	410	685	120	118	96	33	20	30	12	50	2012	6300	2,8
605 207 01	IS	65	625	940	135	115	101	33	19	35	12	50	2012	5600	3,5
605 207 02	AS	65	625	940	135	115	101	33	19	35	12	50	2012	5600	3,5
605 208 01	IS	75	1280	1920	160	135	144	46	36	40	15	65	2517	4750	6,9
605 208 02	AS	75	1280	1920	160	135	144	46	36	40	15	65	2517	4750	6,9
605 209 01	IS	90	2400	3600	200	160	149	52	33	45	20	75	3020	3750	9,6
605 209 02	AS	90	2400	3600	200	160	149	52	33	45	20	75	3020	3750	9,6

Spiders for Couplings RNT (Page 391)

Size	Ø mm	Product No. 92° Shore A yellow	Transmittable torque nominal Nm	max. Nm	alternat. Nm	Product No. 98° Shore A red	Transmittable torque nominal Nm	max. Nm	alternat. Nm	Weight kg
24	55	**605 092 24**	35	70	9,1	**605 098 24**	60	120	16	0,02
28	65	**605 092 28**	95	190	25	**605 098 28**	160	320	42	0,03
38	80	**605 092 38**	190	380	49	**605 098 38**	325	650	85	0,06
42	95	**605 092 42**	265	530	69	**605 098 42**	450	900	117	0,07
48	105	**605 092 48**	310	620	81	**605 098 48**	525	1050	137	0,10
55	120	**605 092 55**	410	820	107	**605 098 55**	685	1370	178	0,12
65	135	**605 092 65**	625	1250	163	**605 098 65***	940	1880	244	0,21
75	160	**605 092 75**	1280	2560	333	**605 098 75***	1920	3840	499	0,34
90	200	**605 092 90**	2400	4800	624	**605 098 90***	3600	7200	936	0,70

* From size 65 shore hardness 95°A.

Note: Spiders with hardness 64°D Shore are not recommended for taper couplings.

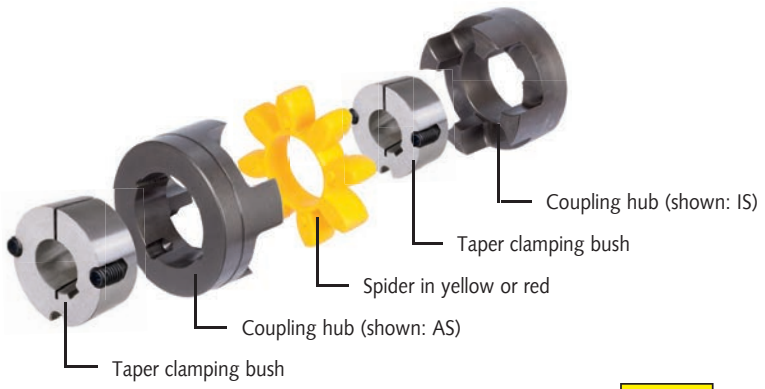

Taper Bushes
Page 360



Elastic Couplings RNK, backlash-free, with clamps

Material: Hubs made from Aluminium.
Spider made from Polyurethane.
Size 5 - 9: Shore hardness 92° (yellow or white).
From size 14: Shore hardness 98° (red).

- Zero backlash, insertable elastic coupling.
- With clamps, ready-to-install for rapid mounting.
- Many different sizes and diameters available.
- From size 14 can be exchanged with couplings RN, RNH and couplings from many other suppliers.
- On request with soft inserts.

Temperature range: -30°C to +90°C.

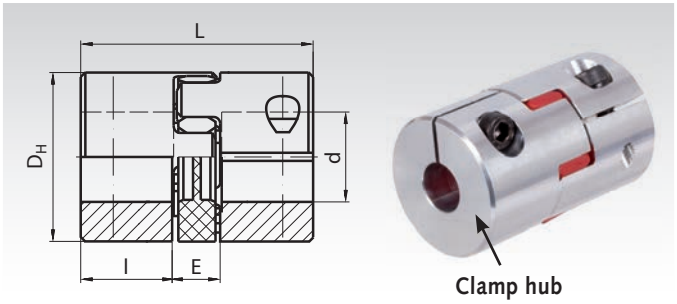

Ordering Details: e.g.: Product No. 605 405 01, Coupling RNK, 1mm bore

Product No.	Size	Torque max. Nm	Bore d^{H7} [1] mm	Bore max. [2] mm	D_H [3] mm	L mm	l mm	E mm	maximum misalignment [4] Angular Degrees	Radial mm	Axial mm	Speed [5] max. min^{-1}	Weight approx. g
605 405 01	5	-	1*	5	10	15	5	5	1	0,06	+0,4/-0,2	38000	2
605 405 03	5	0,4	3	5	10	15	5	5	1	0,06	+0,4/-0,2	38000	2
605 405 04	5	0,5	4	5	10	15	5	5	1	0,06	+0,4/-0,2	38000	2
605 407 02	7	-	2*	7	14	22	7	8	1	0,1	+0,6/-0,3	27000	6
605 407 05	7	0,95	5	7	14	22	7	8	1	0,1	+0,6/-0,3	27000	6
605 407 06	7	1	6	7	14	22	7	8	1	0,1	+0,6/-0,3	27000	6
605 409 03	9	-	3*	11	20	30	10	10	1	0,13	+0,8/-0,4	19000	17
605 409 09	9	2,6	9	11	20	30	10	10	1	0,13	+0,8/-0,4	19000	17
605 409 10	9	2,7	10	11	20	30	10	10	1	0,13	+0,8/-0,4	19000	17
605 409 11	9	2,8	11	11	20	30	10	10	1	0,13	+0,8/-0,4	19000	17
605 414 03	14	-	3*	16	30	35	11	13	0,9	0,09	+1,0/-0,5	13000	41
605 414 11	14	5,6	11	16	30	35	11	13	0,9	0,09	+1,0/-0,5	13000	41
605 414 14	14	6,1	14	16	30	35	11	13	0,9	0,09	+1,0/-0,5	13000	41
605 414 16	14	6,5	16	16	30	35	11	13	0,9	0,09	+1,0/-0,5	13000	41
605 419 05	19	-	5*	22	40	66	25	16	0,9	0,06	+1,2/-0,5	10000	150
605 419 14	19	29	14	22	40	66	25	16	0,9	0,06	+1,2/-0,5	10000	150
605 419 16	19	30	16	22	40	66	25	16	0,9	0,06	+1,2/-0,5	10000	150
605 419 19	19	32	19	22	40	66	25	16	0,9	0,06	+1,2/-0,5	10000	150
605 424 05	24	-	5*	32	55	78	30	18	0,9	0,1	+1,4/-0,5	7000	320
605 424 16	24	38	16	32	55	78	30	18	0,9	0,1	+1,4/-0,5	7000	320
605 424 19	24	40	19	32	55	78	30	18	0,9	0,1	+1,4/-0,5	7000	320
605 424 24	24	44	24	32	55	78	30	18	0,9	0,1	+1,4/-0,5	7000	320
605 428 10	28	-	10*	38	65	90	35	20	0,9	0,11	+1,5/-0,7	6000	470
605 428 24	28	91	24	38	65	90	35	20	0,9	0,11	+1,5/-0,7	6000	470
605 428 28	28	97	28	38	65	90	35	20	0,9	0,11	+1,5/-0,7	6000	470
605 428 32	28	101	32	38	65	90	35	20	0,9	0,11	+1,5/-0,7	6000	470
605 438 10	38	-	10*	45	80	114	45	24	0,9	0,12	+1,8/-0,7	5000	960
605 438 28	38	110	28	45	80	114	45	24	0,9	0,12	+1,8/-0,7	5000	960
605 438 32	38	114	32	45	80	114	45	24	0,9	0,12	+1,8/-0,7	5000	960
605 438 38	38	120	38	45	80	114	45	24	0,9	0,12	+1,8/-0,7	5000	960
605 442 20	42	-	20*	50	95	126	50	26	0,9	0,14	+2,0/-1	4000	1700
605 442 32	42	265	32	50	95	126	50	26	0,9	0,14	+2,0/-1	4000	1700
605 442 38	42	285	38	50	95	126	50	26	0,9	0,14	+2,0/-1	4000	1700
605 442 45	42	300	45	50	95	126	50	26	0,9	0,14	+2,0/-1	4000	1700
605 448 20	48	-	20*	55	105	140	56	28	0,9	0,16	+2,1/-1	3750	2500
605 448 38	48	445	38	55	105	140	56	28	0,9	0,16	+2,1/-1	3750	2500
605 448 45	48	480	45	55	105	140	56	28	0,9	0,16	+2,1/-1	3750	2500
605 448 50	48	495	50	55	105	140	56	28	0,9	0,16	+2,1/-1	3750	2500

[1] Standard bores (both sides). Bores with * are pilot bores (not H7). The torque depends on the size of the finished bore.
[2] Different bores (even one-sided) as well feather keyways, available against surcharge.
[3] Follow the breakdown Ø as per the table below (screw head protrudes over diameter D_H or D).
[4] Maximal values are mutually exclusive. [5]Above 30m/s, dynamic balancing is required.

Further details and dimensions

Size	Torque[1] T_{kN} Nm	Torque[1] T_{kmax} Nm	Screw size DIN 912	Tightening Torque Nm	Max Ø [2] mm	Torsion spring stiffness static Nm/rad	Torsion spring stiffness dynam. Nm/rad[4]	Moment of inertia [3] 10^{-6} Kgm²
5	0,5	1,0	M1,6	0,25	11,4	5,2	16	0,034
7	1,2	2,4	M2	0,37	15,0	14,3	43	0,196
9	3,0	6,0	M2,5	0,75	23,4	31	95	1,08
14	12,5	25	M3	1,4	32,2	172	513	5,7
19	17	34	M6	11	47,0	860	2580	36
24	60	120	M6	11	56,4	2060	6189	150
28	160	320	M8	25	72,6	3440	10314	330
38	325	650	M8	25	83,0	7160	21486	960
42	450	900	M10	70	95	19200	37690	1820
48	525	1050	M12	120	105	22370	45620	3060

Spare Part Spiders

Product No. Spare Part Spider	Size	Shore hardness SH A	Colour	Weight g
605 192 05	5	92	yellow	0,2
605 192 07	7	92	yellow	0,7
605 192 09	9	92	yellow	1,8
605 198 14	14	98	red	5
605 198 19	19	98	red	7
605 198 24	24	98	red	22
605 198 28	28	98	red	32
605 198 38	38	98	red	58
605 198 42	42	98	red	79
605 198 48	48	98	red	98

[1] Nominal moment and max. moment for the design. The permitted torque for each bore size may not be exceeded.
[2] Screw head protrudes past diameter D_H or D. [3] Each one calculated with the max. bore. [4] At 0.5 x T_{kN}.

Elastic Couplings RNH, backlash-free, with half shell clamp

Material: Hubs made from Aluminium.
Spider made from Polyurethane. Shore hardness 98° (red).

- Zero backlash, insertable elastic coupling.
- With removable half shell clamps, ready-to-install for rapid mounting with the possibility of demounting without removal of the other units.
- Many different sizes and diameters available.
- Size exchangeable with couplings RN, RNK and couplings from many other suppliers.
- On request with soft inserts.

Temperature range: -30°C to +90°C.

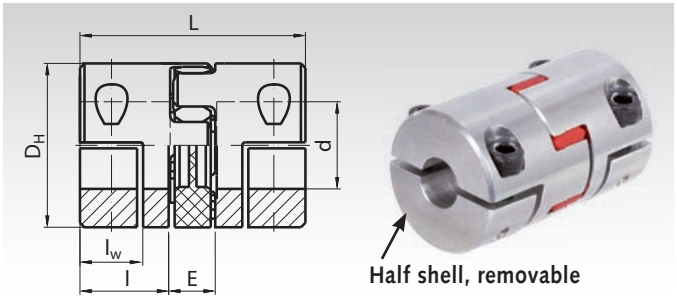

Ordering Details: e.g.: Product No. 605 514 03, Coupling RNH, 3mm bore

Product No.	Size	Torque max. Nm	Bore d^{H7} [1] mm	Bore max. [2] mm	D_H [3] mm	L mm	l mm	l_W mm	E mm	maximum misalignment [4] Angular Degrees	Radial mm	Axial mm	Speed [5] max. min^{-1}	Weight approx. g
605 514 03	14	-	3*	14	30	35	11	8	13	0,9	0,09	+1,0/-0,5	13000	41
605 514 10	14	5,5	10	14	30	35	11	8	13	0,9	0,09	+1,0/-0,5	13000	41
605 514 11	14	5,6	11	14	30	35	11	8	13	0,9	0,09	+1,0/-0,5	13000	41
605 514 14	14	6,1	14	14	30	35	11	8	13	0,9	0,09	+1,0/-0,5	13000	41
605 519 05	19	-	5*	20	40	66	25	19,5	16	0,9	0,06	+1,2/-0,5	10000	150
605 519 14	19	29	14	20	40	66	25	19,5	16	0,9	0,06	+1,2/-0,5	10000	150
605 519 16	19	30	16	20	40	66	25	19,5	16	0,9	0,06	+1,2/-0,5	10000	150
605 519 19	19	32	19	20	40	66	25	19,5	16	0,9	0,06	+1,2/-0,5	10000	150
605 519 20	19	32	20	20	40	66	25	19,5	16	0,9	0,06	+1,2/-0,5	10000	150
605 524 05	24	-	5*	28	55	78	30	22	18	0,9	0,1	+1,4/-0,5	7000	320
605 524 20	24	40	20	28	55	78	30	22	18	0,9	0,1	+1,4/-0,5	7000	320
605 524 24	24	44	24	28	55	78	30	22	18	0,9	0,1	+1,4/-0,5	7000	320
605 524 25	24	45	25	28	55	78	30	22	18	0,9	0,1	+1,4/-0,5	7000	320
605 524 28	24	47	28	28	55	78	30	22	18	0,9	0,1	+1,4/-0,5	7000	320
605 528 10	28	-	10*	38	65	90	35	25	20	0,9	0,11	+1,5/-0,7	6000	470
605 528 24	28	91	24	38	65	90	35	25	20	0,9	0,11	+1,5/-0,7	6000	470
605 528 25	28	92	25	38	65	90	35	25	20	0,9	0,11	+1,5/-0,7	6000	470
605 528 28	28	97	28	38	65	90	35	25	20	0,9	0,11	+1,5/-0,7	6000	470
605 528 32	28	101	32	38	65	90	35	25	20	0,9	0,11	+1,5/-0,7	6000	470
605 528 35	28	104	35	38	65	90	35	25	20	0,9	0,11	+1,5/-0,7	6000	470
605 538 10	38	-	10*	45	80	114	45	33	24	0,9	0,12	+1,8/-0,7	5000	960
605 538 32	38	114	32	45	80	114	45	33	24	0,9	0,12	+1,8/-0,7	5000	960
605 538 35	38	117	35	45	80	114	45	33	24	0,9	0,12	+1,8/-0,7	5000	960
605 538 38	38	120	38	45	80	114	45	33	24	0,9	0,12	+1,8/-0,7	5000	960
605 538 44	38	129	44	45	80	114	45	33	24	0,9	0,12	+1,8/-0,7	5000	960
605 542 20	42	-	20*	50	95	126	50	36,5	26	0,9	0,14	+2,0/-1,0	4000	1700
605 542 35	42	217	35	50	95	126	50	36,5	26	0,9	0,14	+2,0/-1,0	4000	1700
605 542 38	42	235	38	50	95	126	50	36,5	26	0,9	0,14	+2,0/-1,0	4000	1700
605 542 44	42	270	44	50	95	126	50	36,5	26	0,9	0,14	+2,0/-1,0	4000	1700
605 542 50	42	310	50	50	95	126	50	36,5	26	0,9	0,14	+2,0/-1,0	4000	1700
605 548 20	48	-	20*	55	105	140	56	39,5	28	0,9	0,16	+2,1/-1,0	3750	2500
605 548 40	48	362	40	55	105	140	56	39,5	28	0,9	0,16	+2,1/-1,0	3750	2500
605 548 44	48	390	44	55	105	140	56	39,5	28	0,9	0,16	+2,1/-1,0	3750	2500
605 548 50	48	452	50	55	105	140	56	39,5	28	0,9	0,16	+2,1/-1,0	3750	2500

[1] Standard bores (both sides). Bores with * are pilot bores (not H7). The torque depends on the size of the finished bore.
[2] Different bores (even one-sided) as well feather keyways, available against surcharge.
[3] Follow the breakdown Ø as per the table below (screw head protrudes over diameter D_H or D).
[4] Maximal values are mutually exclusive. [5] Above 30m/s, dynamic balancing is required.

Further details and dimensions

Size	Torque [1] T_{kN} Nm	T_{kmax} Nm	Screw size DIN 912	Tightening Torque Nm	Max. Ø [2] mm	Torsion spring stiffness static Nm/rad	dynam. Nm/rad [4]	Moment of inertia [3] 10^{-6} Kgm²
14	12,5	25	M4	5	35	172	513	5,7
19	17	34	M6	10	46	860	2580	36
24	60	120	M6	10	58	2060	6189	150
28	160	320	M8	25	73	3440	10314	330
38	325	650	M8	25	84	7160	21486	960
42	450	900	M10	49	94	19200	37690	4920
48	525	1050	M12	86	105	22370	45620	8260

[1] Nominal moment and max. moment for the design. The permitted torque for each bore size may not be exceeded.
[2] Screw head protrudes past diameter D_H.
[3] Each one calculated with the max. bore.
[4] At 0.5 x T_{kN}.

Spare Part Spiders

Product No. Spare Part Spider	Size	Shore hardness SH A	Colour	Weight g
605 198 14	14	98	red	5
605 198 19	19	98	red	7
605 198 24	24	98	red	22
605 198 28	28	98	red	32
605 198 38	38	98	red	58
605 198 42	42	98	red	79
605 198 48	48	98	red	98

Spiders for Elastic Couplings, standard type, 92° Shore A

Material: Polyurethane, shore hardness 92°A (soft), yellow.

Spiders (plastic inserts) for elastic couplings (jaw couplings) like RN, RNG, RNI, RNR, RNT and foreign parts of the same kind from other suppliers. Soft type, for common usage. Temperature range -40°C to +90°C.

Ordering Details: e.g.: Product No. 605 092 07, Spider standard, 92°A, Size 7



Product No. yellow	Size	Ø mm	No. of teeth	Transmittable torque Nominal Nm	Peak Nm	Altern. Nm	Torsional angle T_{KN} °	$T_{K\,max}$ °	Weight g
605 192 07	7*	14	4	1,1	2,2	0,3	1,3	2	0,7
605 192 09	9*	20	4	2,9	5,9	0,8	1,3	2	1,8
605 092 14	14	30	4	7,5	15	2,0	6,4	10	5
605 092 19	19	40	6	10	20	2,6	3,2	5	7
605 092 24	24	55	8	35	70	9,1	3,2	5	22
605 092 28	28	65	8	95	190	25	3,2	5	32
605 092 38	38	80	8	190	380	49	3,2	5	58
605 092 42	42	95	8	265	530	69	3,2	5	70
605 092 48	48	105	8	310	620	81	3,2	5	98
605 092 55	55	120	8	410	820	107	3,2	5	120
605 092 65	65	135	8	625	1250	163	3,2	5	210
605 092 75	75	160	10	1280	2560	333	3,2	5	340
605 092 90	90	200	10	2400	4800	624	3,2	5	700
605 092 95	100	225	10	3300	6600	858	3,2	5	900

T_{kN} = Nominal torque.
$T_{K\,max.}$ = Peak torque.

Spiders for Elastic Couplings, standard type, 98° Shore A

Material: Polyurethane, shore hardness 98°A (medium hard), red.

Spiders (plastic inserts) for elastic couplings (jaw couplings) like RN, RNG, RNI, RNR, RNT and foreign parts of the same kind from other suppliers. Medium hard type, for high torques. Temperature range -30°C to +100°C.

Ordering Details: e.g.: Product No. 605 098 14, Spider standard, 98°A, Size 14



Product No. red	Size	Ø mm	No. of teeth	Transmittable torque Nominal Nm	Peak Nm	Altern. Nm	Torsional angle T_{KN} °	$T_{K\,max}$ °	Weight g
605 098 14	14	30	4	12,5	25	3,3	6,4	10	5
605 098 19	19	40	6	17	34	4,4	3,2	5	7
605 098 24	24	55	8	60	120	16	3,2	5	22
605 098 28	28	65	8	160	320	42	3,2	5	32
605 098 38	38	80	8	325	650	85	3,2	5	58
605 098 42	42	95	8	450	900	117	3,2	5	70
605 098 48	48	105	8	525	1050	137	3,2	5	98
605 098 55	55	120	8	685	1370	178	3,2	5	120
605 098 65	65*	135	8	940	1880	244	3,2	5	210
605 098 75	75*	160	10	1920	3840	499	3,2	5	340
605 098 90	90*	200	10	3600	7200	936	3,2	5	700
605 098 95	100*	225	10	4950	9900	1287	3,2	5	900

* From size 65 shore hardness 95° A.

T_{kN} = Nominal torque.
$T_{K\,max.}$ = Peak torque.

Spiders for Elastic Couplings, standard type, 64° Shore D

Material: Polyurethane, shore hardness 64°D (hard), green.

Spiders (plastic inserts) for elastic couplings (jaw couplings) like RN, RNG, RNI, RNR and foreign parts of the same kind from other suppliers. Hard type, for very high torques at small torsion angle. Temperature range -20°C to +100°C.

Ordering Details: e.g.: Product No. 605 064 14, Spider standard, 64°D, Size 14



Product No. green	Size	Ø mm	No. of teeth	Transmittable torque Nominal Nm	Peak Nm	Altern. Nm	Torsional angle T_{KN} °	$T_{K\,max}$ °	Weight g
605 064 14	14	30	4	16	32	4,2	4,5	7,0	5
605 064 19	19	40	6	21	42	5,5	2,5	3,6	7
605 064 24	24	55	8	75	150	19,5	2,5	3,6	22
605 064 28	28	65	8	200	400	52	2,5	3,6	32
605 064 38	38	80	8	405	810	105	2,5	3,6	58
605 064 42	42	95	8	560	1120	146	2,5	3,6	70
605 064 48	48	105	8	655	1310	170	2,5	3,6	98
605 064 55	55	120	8	825	1650	215	2,5	3,6	120
605 064 65	65	135	8	1175	2350	306	2,5	3,6	210
605 064 75	75	160	10	2400	4800	624	2,5	3,6	340
605 064 90	90	200	10	4500	9000	1170	2,5	3,6	700
605 064 95	100	225	10	6185	12370	1608	2,5	3,6	900

Note: Spiders with hardness 64°D Shore are not recommended for taper couplings. At couplings made from aluminium, the effective torque should not be higher than the transmittable torque of the 98°A Shore spiders.

T_{kN} = Nominal torque.
$T_{K\,max.}$ = Peak torque.

Spiders for Elastic Couplings, backlash-free type, 92° Shore A



Material: Polyurethane, shore hardness 92°A (soft), yellow.

Spiders (plastic inserts) for backlash-free elastic couplings (jaw couplings) like RNH and RNK and foreign parts of the same kind from other suppliers. Soft type, for common usage. Temperature range -40°C to +90°C.

Ordering Details: e.g.: Product No. 605 192 05, Spider backlash-free, 92°A, Size 5

Product No. yellow	Size	Ø mm	No. of teeth	Transmittable torque Nominal Nm	Peak Nm	Tors. spring stiffness static Nm/rad	dynam. Nm/rad	Stiffn. radial N/mm	Weight g
605 192 05	5	10	4	0,5	1,0	5,2	16	154	0,2
605 192 07	7	14	4	1,1	2,2	14,3	43	219	0,7
605 192 09	9	20	4	2,9	5,9	31	95	262	1,7
605 192 14	14	30	4	7,5	15	115	344	336	4,6
605 192 19	19	40	6	10	20	573	1720	1120	7
605 192 24	24	55	8	35	70	1432	4296	1480	18
605 192 28	28	65	8	95	190	2292	6876	1780	29
605 192 38	38	80	8	190	380	4584	13752	2350	49
605 192 42	42	95	8	265	530	6300	14490	2430	79
605 192 48	48	105	8	310	620	7850	18055	2580	98
605 192 55	55	120	8	410	820	9500	21850	2980	115

Spiders for Elastic Couplings, backlash-free type, 98° Shore A



Material: Polyurethane, shore hardness 98°A (medium hard), red.

Spiders (plastic inserts) for backlash-free elastic couplings (jaw couplings) like RNH and RNK and foreign parts of the same kind from other suppliers. Medium hard type, for high torques. Temperature range -30°C to +100°C.

Ordering Details: e.g.: Product No. 605 198 14, Spider backlash-free, 98°A, Size 14

Product No. red	Size	Ø mm	No. of teeth	Transmittable torque Nominal Nm	Peak Nm	Tors. spring stiffness static Nm/rad	dynam. Nm/rad	Stiffn. radial N/mm	Weight g
605 198 14	14	30	4	12,5	25	172	513	654	4,6
605 198 19	19	40	6	17	34	860	2580	2010	7
605 198 24	24	55	8	60	120	2060	6190	2560	18
605 198 28	28	65	8	160	320	3440	10314	3200	29
605 198 38	38	80	8	325	650	7160	21486	4400	49
605 198 42	42	95	8	450	900	19200	37690	5570	79
605 198 48	48	105	8	525	1050	22370	45620	5930	98
605 198 55	55	120	8	685	1370	23800	59500	6686	115

Spiders for Elastic Couplings, backlash-free type, 64° Shore D



Material: Polyurethane, shore hardness 64°D (hard), green.

Spiders (plastic inserts) for backlash-free elastic couplings (jaw couplings) like RNH and RNK and foreign parts of the same kind from other suppliers. Hard type, for very high torques at small torsion angle. Temperature range -20°C to +100°C.

Ordering Details: e.g.: Product No. 605 164 14, Spider backlash-free, 64°D, Size 14

Product No. green	Size	Ø mm	No. of teeth	Transmittable torque Nominal Nm	Peak Nm	Tors. spring stiffness static Nm/rad	dynam. Nm/rad	Stiffn. radial N/mm	Weight g
605 164 14	14	30	4	16	32	234	702	856	4,6
605 164 19	19	40	6	21	42	2560	3810	2930	7
605 164 24	24	55	8	75	150	2978	8934	3696	18
605 164 28	28	65	8	200	400	4350	13050	4348	29
605 164 38	38	80	8	405	810	10540	31620	6474	49
605 164 42	42	95	8	560	1120	27580	68950	7270	79
605 164 48	48	105	8	655	1310	36200	90500	8274	98
605 164 55	55	120	8	825	1650	41460	103650	9248	115

Note: Spiders with hardness 64°D Shore are not recommended for taper couplings. At couplings made from aluminium, the effective torque should not be higher than the transmittable torque of the 98°A Shore spiders.

Elastic Couplings DXA

Material: Up to size 28: Hubs made from Aluminium.
From size 32: Hubs made from grey cast iron GG25.
Insert made from Polyurethane, shore hardness 92° A, white.

- Insertable elastic coupling, for high torques.
- Not backlash-free. Does not transfer any axial forces.
- Robust component for relatively large shaft offset.
  Particularly suitable for large radial offset.

Improved version. Special tooth profile and machined claws result in longer lifetime.

Temperature range: -20°C to +80°C.

Couplings are available pre-drilled ex stock.
Customized bores and feather-key grooves available at extra charge.

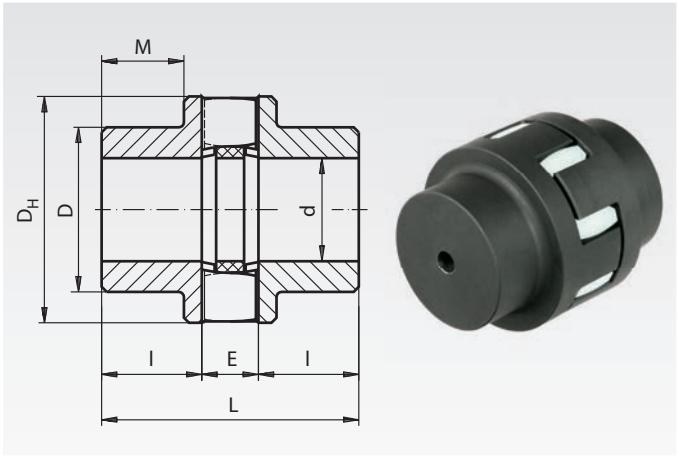

Ordering Details: e.g.: Product No. 604 024 01, Coupling DXA size 24

Product No.	Size	Torque nominal Nm	Torque max. Nm	Bores alternating Nm	Bores pre-bored mm	Bores $d_{max.}$ mm	D_H mm	D mm	L mm	l mm	M mm	$E^{1)}$ mm	Max. Shaft Misalignment[2] radial mm	Max. Shaft Misalignment[2] axial mm	Max. Shaft Misalignment[2] angular °	Speed max. min^{-1}	Weight max. kg
604 024 01	24*	80	160	25	-	24	55	55	66	24	-	18	0,3	1,2	0,7	12500	0,55
604 028 01	28*	120	240	37	-	28	62	62	76	28	-	20	0,3	1,2	0,7	11100	0,76
604 032 01	32	170	340	51	9	32	70	52	86	32	22	22	0,3	1,2	0,7	9800	1,09
604 038 01	38	325	650	100	14	38	84	60	100	38	27	24	0,4	1,5	0,7	8100	1,76
604 042 01	42	460	920	140	14	42	92	68	110	42	31	26	0,4	1,5	0,7	7400	2,38
604 048 01	48	650	1300	200	17	48	105	76	124	48	36	28	0,4	1,5	0,7	6500	3,38
604 055 01	55	880	1760	270	17	55	120	88	140	55	43	30	0,5	1,8	0,7	5700	4,89
604 060 01	60	1150	2300	350	22	60	130	96	152	60	47	32	0,5	1,8	0,7	5200	6,29
604 065 01	65	1600	3200	480	24	65	142	104	165	65	51	35	0,5	1,8	0,7	4800	8,15
604 075 01	75	2450	4900	750	30	75	165	120	190	75	59	40	0,6	2,1	0,7	4100	12,6
604 085 01	85	3350	6700	1000	40	85	185	136	214	85	68	44	0,7	2,1	0,7	3700	17,9
604 100 01	100	5500	11000	1700	58	100	220	160	250	100	80	50	0,8	2,4	0,7	3100	29,3

* Up to size 28: hubs from aluminium.
[1)] At mounting, the distance between the hubs must be measure E to allow the max. shaft misalignment.
[2)] The displacement values stated in the tables are maximum values, which must not occur at the same time at the maximun value. If radial and angular displacements do occur simultaneously, the permissible displacement values may only be used proportionately.Furthermore, the figures stated are only valid up to a speed of 600 min^{-1}. At higher speeds the misalignment values must again be reduced.

Spare Part - Spiders for Couplings DX and DXA

Material: Polyurethane, Shore hardness 92°A (soft), color white.
Only suitable for couplings DX and DXA.
Temperature range: -20°C to +80°C.



Product No.	Size	Ø mm	No. of teeth	Weight g
604 124 00	24	53	8	10
604 128 00	28	60	8	14
604 132 00	32	68	8	20
604 138 00	38	80	10	30
604 142 00	42	90	10	40
604 148 00	48	102	10	54
604 155 00	55	117	10	80
604 160 00	60	127	10	92
604 165 00	65	140	10	120
604 175 00	75	162	10	200
604 185 00	85	182	10	260
604 200 00	100	216	10	450

Advantages of coupling DXA

Common elastic spider couplings have symmetric tooth curves. This leads to an unequal load inside the spider´s teeth and means high stress to the top of the teeth, resulting into high wear and requiring a big coupling size. The special, asymmetric tooth profile of couplings DXA ensures a uniform force distribution over the whole tooth. Furthermore, this avoids the moving of the spider´s teeth to the middle of the coupling under high load. Contrary to the old version DX, the claws and all other surfaces of coupling DXA are well machined to a fine surface finish. Both, tooth profile and claw finish, enable a higher torque and reduced wear in comparison to common couplings.



Reworking within 24h-service possible. Custom made parts on request.

Type A - Concentric Arrangement

as sliding hub for a driving wheel

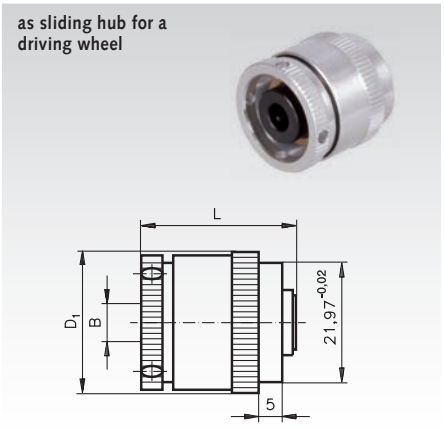

Type B - Axial Arrangement

to connect two shafts

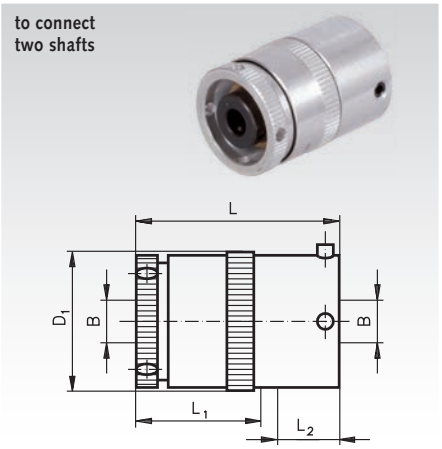

Type C - Axial Arrangement

to connect two shafts with shaft misalignment

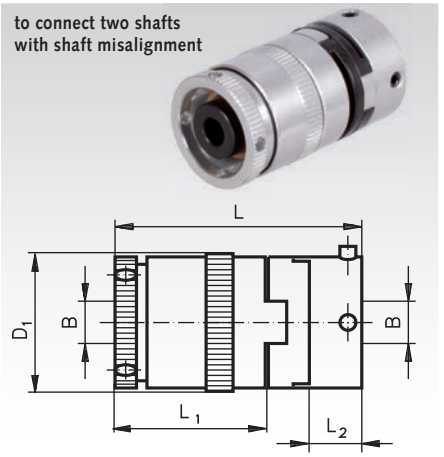

Material: Housing made of aluminium alloy with iridite NCP finish. Inner Hub made of steel. Max. slip-speed 1,000 min^{-1}. Torsional backlash of the coupling below 2°.

Ordering Details: e.g.: Product No. 610 403 00, Friction Clutch, Type A, 6 mm Bore

Product No.	Type	Number of Friction Plates Pieces	L mm	L_1 mm	L_2 mm	D_1 mm	Bore $B^{+0.03}$ mm	Set Screw Size and Arrangement	Weight g	Product No. Spare Part Insert	Weight g
610 403 00	A	2	26,4		-	25,8	6	M 3x3,	37	-	-
610 404 00	A	2	26,4		-	25,8	8	2x90°	37	-	-
610 408 00	A	6	32,4		-	25,8	6	only	48	-	-
610 409 00	A	6	32,4		-	25,8	8	at 1 Side	48	-	-
610 423 00	B	2	36	25	9	25,8	6	M 3x3, 2x90°	50	-	-
610 424 00	B	2	36	25	9	25,8	8	at Side 1	50	-	-
610 428 00	B	6	42,5	31	9	25,8	6	M 4x4, 2x90°	61	-	-
610 429 00	B	6	42,5	31	9	25,8	8	at Side 2	61	-	-
610 443 00	C	2	46,5	25	8,6	25,8	6	M 3x3, 2x90°	57	**601 244 00**	2,7
610 444 00	C	2	46,5	25	8,6	25,8	8	at Side 1	57	**601 244 00**	2,7
610 448 00	C	6	53,4	31	8,6	25,8	6	M 4x4, 2x90°	83	**601 244 00**	2,7
610 449 00	C	6	53,4	31	8,6	25,8	8	at Side 2	83	**601 244 00**	2,7

Sectional drawing of a slip clutch with 6 clutch plates

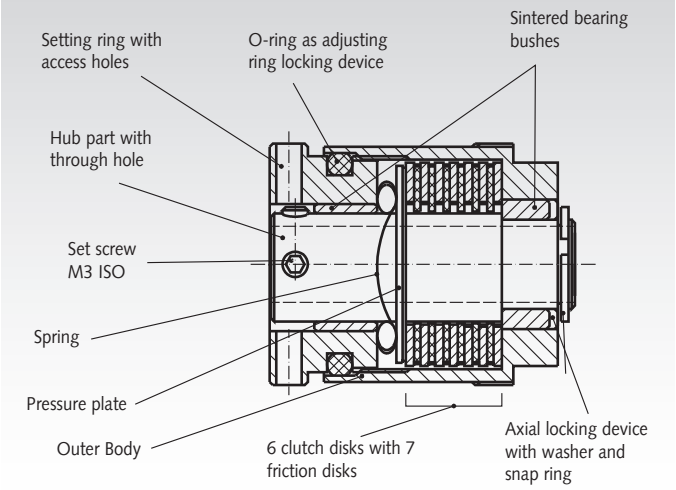

Torque range with 2 friction plates 2.4 Ncm to 53.8 Ncm. Dissipation at 20°C ambient temperature up to 7 watts. **Torque range with 6 friction plates 7.8 Ncm to 132.4 Ncm.** Dissipation at 20°C ambient temperature up to 8.6 Watt. Maximum permissible temperature at the surface for all sizes during operation 80°C.

An adjusting ring - screwed to the outer body - serves to adjust the torque. This ring acts via a disk spring onto the clutch or friction disks. Two sintered bearing sleeves serve as bearing housing to inner component. An O-Ring seals the hub off against dirt and with its friction force it also makes sure that the adjusting ring is not moved unintentionally. **The power can be connected to either the hub or the housing.**

Depending on the specific application, the friction clutch can be employed as torque limiter, as overrunning clutch or as brake. As the generation of heat is basically a function including the slip torque and the employed torque, the following formula was derived:

$$\frac{\text{Slippage (min}^{-1}\text{) x Torque (Ncm)}}{955} = \text{Heat Dissipation in Watts}$$

As the connected components (shafts, gears, etc.) support the heat dissipation, in case of doubt please calculate the effective surface temperature under adverse operating conditions. The permissible temperatures are stated above.

Special designs: the modular-design principle used in slip clutches leads to many different designs and possible connecting parts, e.g., special flanges and other components, according to drawings.

ATTENTION: the adjusting screws can damage the adjusting ring if they are loosened too far. 3/4 to 1 turn is sufficient.

Concentric mounting (type A)

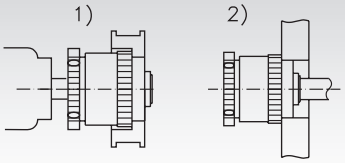

Axial arrangement, both shafts outside (type C)

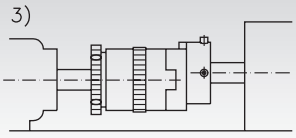

Axial arrangement, one shaft outside (type B)

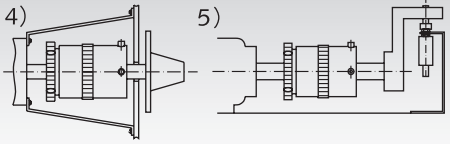

1) Pulley or sprocket (bondage recommend), shaft also used as bearing.
2) Mounted to the housing as permanent brake and shaft bearing.
3) Connection electronic engine and gear box, with assembly-related shaft misalignment.

4) Shaft of a multi-turn potentiometer divided with slip clutches. No overrevving.
5) Protecting a lever key from damage using a slip clutch.

Sliding Hubs with Torsionally-Flexible Coupling RNR

Material: Sliding hub: steel, zinc-plated and chromated, rust-proof friction pads.

Elastic coupling: coupling hub steel (size 00 from aluminium), spider (plastic insert) Polyurethane. Hardness 92° Shore A (optional 98° Shore A).

- The slipping torque can be adjusted with common assembly tools for screws.
- The elastic coupling can be mounted in axial direction.
- Torque can be altered after mounting.
- By mounting additional springs, the torque range can be increased. (additional springs have to be ordered separately).
- Customized bores and feather-key grooves available at extra charge.

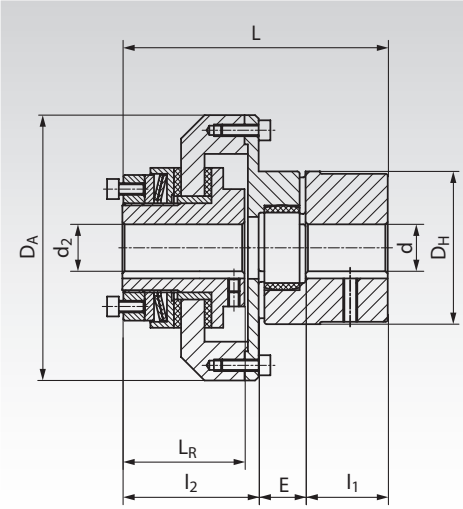



Ordering Details: e.g.: Product No. 612 199 00, Sliding Hub RNR with Torsionally-Flexible Coupling

Product No.	Size	d ; d_2	$d_{max.}$ mm	$d_{2\,max.}$ mm	D_A mm	D_H mm	l_1 mm	E mm	l_2 mm	L_R mm	L mm	Weight kg
612 199 00	00	4,8	16	10	44	30	11	13	35	31	59	0,35
612 200 00	0	5,7	25	20	63	40	25	16	37	33	78	0,90
612 201 00	01	10	35	22	80	55	30	18	50	45	98	1,95
612 202 00	1	10	40	25	98	65	35	20	58	52	113	3,10
612 203 00	2	14	48	35	120	80	45	24	64	57	133	5,50

Size	Torque of Sliding Hub Standard [1] Nm	Optional [2] Nm	Optional [2] Nm	Torque Coupling T_{KN} [3] Nm	Torque Coupling $T_{Kmax.}$ [4] Nm	Speed max. min^{-1}
00	0,5 - 5	1 - 10	- -	7,5	15	10.000
0	2,0 - 10	4 - 20	- -	10,0	20	8.500
01	5,0 - 35	10 - 70	60 - 105	35,0	70	6.600
1	20,0 - 75	40 - 150	130 - 200	95,0	190	5.600
2	25,0 - 140	50 - 280	250 - 400	190,0	380	4.300

[1] With one disc spring (standard version).
[2] With second or third disc spring (order separately).
[3] Nominal torque of the elastic coupling with standard spider 92° Shore A.
[4] Maximum torque of the elastic coupling with standard spider 92° Shore A.

Replacement Friction Discs and additional Disc Springs

Matching Coupling Product No.	Size	Product No. Friction Disc[1]	Outer Ø mm	Weight g	Product No. Disc Spring	Outer Ø mm	Weight g
612 199 00	00	**612 100 01**	30	2	**612 100 02**	30	5
612 200 00	0	**612 100 11**	45	3	**612 100 12**	42,5	5
612 201 00	01	**612 101 01**	58	10	**612 101 02**	53,1	10
612 202 00	1	**612 101 11**	68	13	**612 101 12**	61,5	20
612 203 00	2	**612 102 01**	88	21	**612 102 02**	79,5	40

[1] 2 pieces required.

Spiders for RNR

Matching Coupling Product No.	Size	Product No. Spare Part Spider 92° Shore, yellow	Torque Nom. Nm	Torque max. Nm	Product No. Optional Spider 98° Shore, red	Torque Nom. Nm	Torque max. Nm	Weight g
612 199 00	00 (14)	**605 092 14**	7,5	15	**605 098 14**	12,5	25	5
612 200 00	0 (19)	**605 092 19**	10	20	**605 098 19**	17	34	7
612 201 00	01 (24)	**605 092 24**	35	70	**605 098 24**	60	120	22
612 202 00	1 (28)	**605 092 28**	95	190	**605 098 28**	160	320	32
612 203 00	2 (38)	**605 092 38**	190	380	**605 098 38**	325	650	58



Reworking within 24h-service possible. Custom made parts on request.

Multi-Plate Friction Clutches PD

Material: Steel.

Multi-plate friction clutches have proven to deliver an optimal performance when used with slow-starting machines. They are also used as safety couplings. The occurring torque peaks are levelled out by friction clutches. The disk pairing is steel/sintered bronze, with the inner plates of the pairings lined. The composition of the lining means up to 400°C can be withstood short term. At permanent load, however, only up to 250°C. Sintered clutch plates have the advantage of an almost constant friction coefficient even with fast growing circumferential speeds and higher temperatures. The assembly can be used for dry and wet operation. Advantages of these couplings are: Practical dimensions. Easy adjustment and re-adjustment. Inner and outer plates with special splines.

Couplings are available pre-drilled H7 ex stock.
Customized bores and feather-key grooves available at extra charge

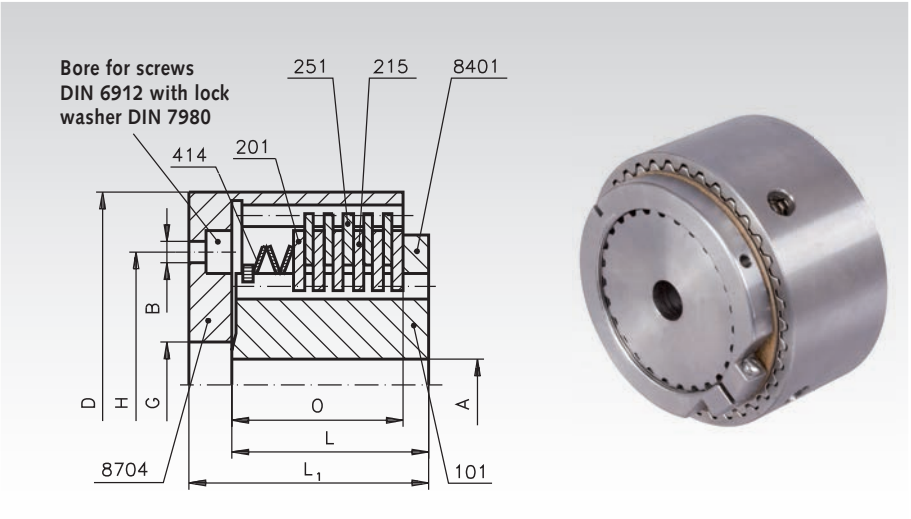

Product No.	Torque* Dry Nm	Torque* Wet Nm	Bore. A Pre-bore mm	Bore. A H7 max. mm	B mm	D mm	G^{H7} mm	H mm	L mm	L_1 mm	O mm	Speed max. min^{-1}	Weight kg	Product No. Spare Plates Compl. Set	Weight Spare Part g
611 001 00	14	6	10	20[1)]	3x for M5	55	22	34	28	36	22	3000	0,44	**611 011 00**	71
611 002 00	33	14	12	25[2)]	3x for M5	67	32	44	35	43	28	3000	0,81	**611 012 00**	140
611 003 00	62	26	12	40[3)]	4x for M6	82	45	58	40	48	30	3000	1,45	**611 013 00**	227
611 004 00	126	54	25	42	4x for M6	100	62	76	45	53	36	2500	2,24	**611 014 00**	339
611 005 00	230	100	25	55	4x for M8	120	72	90	55	65	42	2500	3,97	**611 015 00**	703
611 006 00	380	160	25	70	6x for M10	145	85	110	65	77	53	2500	5,82	**611 016 00**	1558

[1)] From Bore 17 mm only with flat feather key-grooves according to DIN 6885/3.
[2)] From Bore 22 mm only with flat feather key-grooves according to DIN 6885/3.
[3)] From Bore 38 mm only with flat feather key-grooves according to DIN 6885/3.
* Max. transmittable torque for dry or wet operation. The minimum adjustable torque is at about 50% of the maximum value.

Construction and Mounting

The hub 101 is equipped with splines, guiding the sinter-plates 215. The casing 8704 also has splines, which guide the outer plates 251 made from steel. The last component of the plate pack is the pressure plate 201. The disc springs 414 together with the adjusting screw 8401 lead to the friction grip of the plate pack. During assembly please make sure that the hub 101 and the casing are securely fixed in axial direction. When connecting 2 shaft ends, one shaft has to be mounted inside the housing 8704 supported by a centering bearing.
The hub 101 must not rub against the casing 8704, but against the sleeve or the inner bearing ring. At dry operating, make sure no oil or lubricate enters the plate pack. For re-adjustment loosen the locking screw in the adjusting nut 8401. Turning right will increase the torque, turning left leads to a reduction. After re-setting always re-tighten the locking screw. When ordering spare parts always state the factory number 8401 on the adjusting screw.



Reworking within 24h-service possible. Custom made parts on request.

Safety Clutchs SI

Material: Steel.

This clutch is a backlash-free overload system operating on the positive principle. It works with the recently developed principle of the "punched disk spring". At overload the disk spring disengages, the torque flow is interrupted. After the overload has passed, the clutch re-engages on its own.
The axial movement of the shift ring can be used to trigger a limit switch/sensor turning off the engine (travel 2mm).
Customer components (e.g. sprockets, pulleys) can be easily integrated; special components, as needed for the common systems, are not required here.

Customized bores and feather-key grooves available at extra charge.

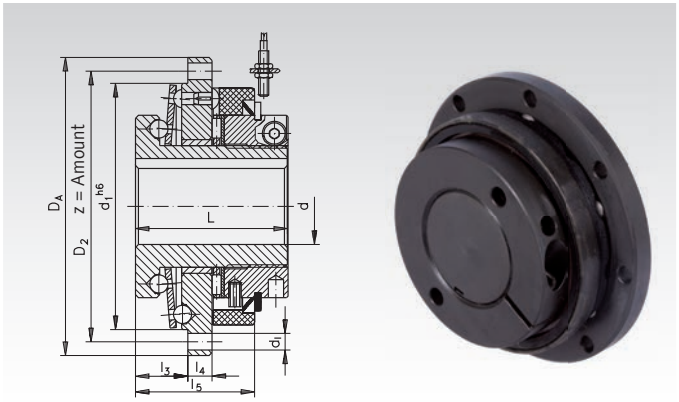

Ordering Details: e.g.: Product No. 612 720 00, Safety Clutch SI, 6-20 Nm

Product No.	Torque Nm	$d_{max.}$ mm	L mm	D_A mm	D_2, z mm	d_1 mm	d_1 mm	l_3 mm	l_4 mm	l_5 mm	*Speed max. min^{-1}	Weight kg
612 720 00	6 - 20	20	45	80	71, z= 8	4,5	65	16	6	35	1500	0,69
612 725 00	20 - 60	25	50	98	89, z= 8	5,5	81	17	8	39	1500	1,26
612 735 00	25 - 80	35	60	120	110, z=12	5,5	102	21	10	42	1500	1,89
612 750 00	60 - 180	50	70	162	152, z=12	6,6	142	25	13	56	1500	3,93

* Higher speeds possible if technical data is transmitted.

Limit Switch (Engine-Emergency-Stop Switch)

Ordering Details: e.g.: Product No. 612 605 00 Limit Switch

Product No.	Weight in g
612 605 00	324

Material: Housing made from aluminium die-cast, painted grey, with rubber seal. Switch made from brass. Bellow made from neoprene (black). Housing screws zinc-plated. Cable connection made from plastic (grey).

Electrical connection: 220-250V AC, 10 A.

Application: Robust limit switch for safety clutches SI (see above) and safety clutches CM (page 398) or similar applications. If the torque set on the clutch is exceeded, the clutch slips. At the same time the shift ring moves. The shift ring then triggers the switch and turns off the engine. This protects the entire drive system and prevents possible damage.

Mounting: On the back wall are two bores Ø 4.3 mm. These fit two screws M4 with internal hexagon, slot or cross recess (head-Ø up to 7 mm). The wall thickness around the mounting holes is 8 mm.

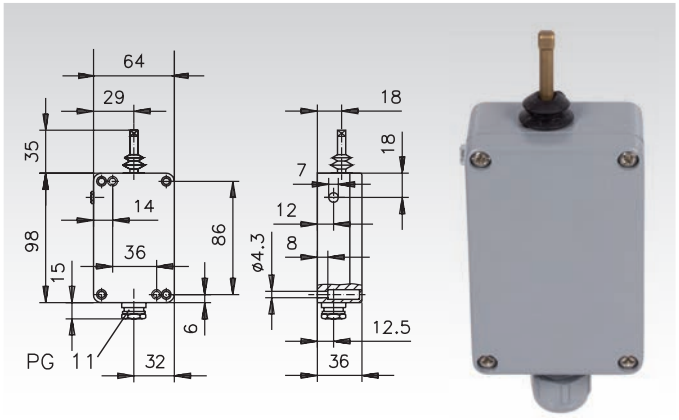

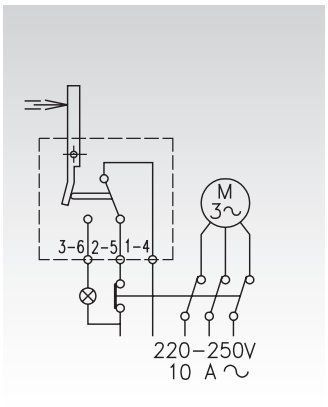

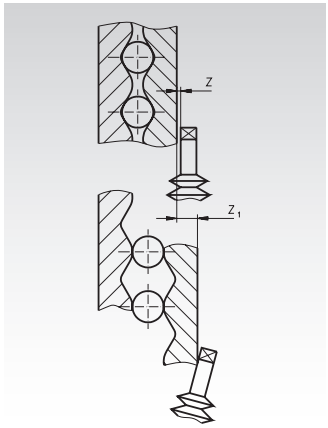

Dimension Z_1 for Limit Stop with Clutches SI

Product No. 612 720 00 to 612 750 00: 2 mm

Dimensions Z_1 for Limit Stop with Clutches CM

Size 20: 1.4 mm
Size 25: 2.3 mm
Size 35: 2.4 mm
Size 45: 2.7 mm
Size 55: 3.7 mm

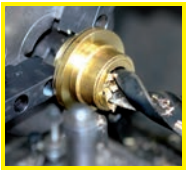

Reworking within 24h-service possible. Custom made parts on request.

Safety Clutches CM

Material: Steel.

Overload system operating on the positive principle, available in 5 sizes. For each size there are 4 different disk-plate sets for different torque ranges. **The required disk-plate set has to be ordered separately and is supplied unassembled.**

When mounting simple driving elements, as sprockets, pulleys, etc., always make sure the shaft is supported.
Optimal protection against overloads.
Trigger torque can be adjusted.
High reproducibility of the triggering and re-engaging process.
Robust design, long service life, absolutely maintenance free.
Immediate free-wheeling of the drive. Automatic emergency stop of the driving unit through switch (to be ordered separately).
Not negatively affected by frequent triggering sequences.

The disk-plate sets (S, M, L or LL) and the limit switch (emergency-stop switch) for all sizes Product No. 612 605 00 (page 397) have to be ordered separately.

Customized bores and feather-key grooves available at extra charge.

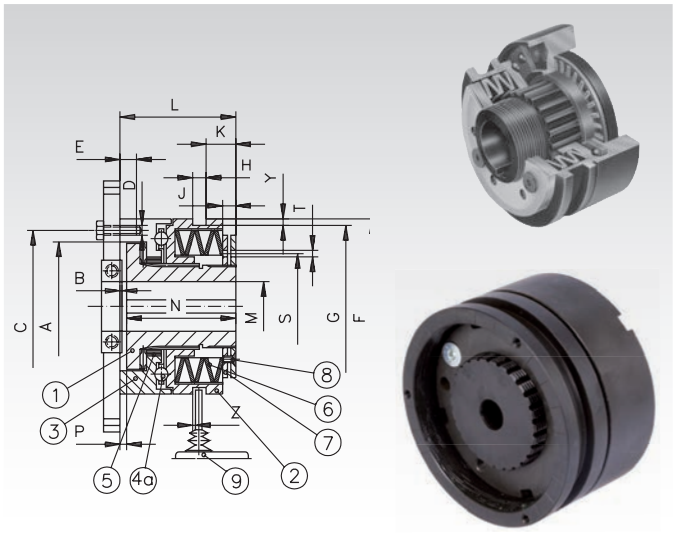

Ordering Details: e.g.: Product No. 612 620 00, Safety Clutch CM, Size 20
Product No. 612 620 02, Disk-Plate Set M (essential information)

Product No.	Size	A mm	B mm	C mm	D mm	E mm	F mm	G mm	H mm	K mm	J mm	L mm	$M_{min.}$ mm	$M_{max.}$ mm	N mm	P mm	R mm	S mm	T mm	Y mm	Z mm	Weight kg
612 620 00	20	41	4	48	6xM5	6,5	55	50	9	7,5	3	38,5	7	20	35	3,1	6	38,5	5	2	0,3	0,5
612 625 00	25	60	4	70	6xM5	8	82	72	9	11,5	6	52	10	25	48	3,1	6	54	6	2	0,3	1,5
612 635 00	35	78	5	89	6xM6	10	100	91	9	12	6	61	14	35	56	3,6	8	70	6	2	0,5	2,9
612 645 00	45	90,5	5	105	6xM8	12	120	112	9	22	8,5	78	18	45	72	4,1	10	84	6	2	0,5	5,0
612 655 00	55	105	6,5	125	6xM10	15	146	140	9	27	11	100	24	55	93,5	4,1	14	108	10	2	0,8	9,8

Technical Data and Product No. of Disk-Plate Sets

		Nm for Disk-Plate Sets					Max. Speed	
Product No.	**Product No**	S	**Product No.**	M	**Product No.**	L	**Product No.**	LL	S-M	L-LL
612 620 00	**612 620 01**	2,5 - 5	**612 620 02***	5 - 10	**612 620 02***	10 - 20	**612 620 04**	20 - 40	3300	1800
612 625 00	**612 625 01**	6,0 - 12	**612 625 02**	12 - 25	**612 625 03**	25 - 60	**612 625 04**	60 - 100	2890	1450
612 635 00	**612 635 01**	12,0 - 25	**612 635 02**	25 - 50	**612 635 03**	50 - 120	**612 635 04**	120 - 200	2350	1200
612 645 00	**612 645 01**	25,0 - 50	**612 645 02**	50 - 100	**612 645 03**	100 - 250	**612 645 04**	250 - 400	2000	1000
612 655 00	**612 655 01**	50,0 - 100	**612 655 02**	100 - 200	**612 655 03**	200 - 500	**612 655 04**	500 - 800	1650	850

* This spring set covers both torque ranges M and L (only for size 20).

Possible Disk-Plate Sets

S (light)		M (medium)		L (heavy)		LL (very heavy)	
Size 20 - 55	6 x 1S	**Size 20 - 55**	5 x 1M	**Size 20**	5 x 1M	**Size 20**	4 x 1L
				Size 25 - 55	5 x 1L	**Size 25 - 55**	3 x 2L

Functioning

At normal operating conditions, the safety clutch transmits the torque from the driving shaft via the ball race onto the flange (3). The balls (4a) are pressed into the CNC-milled recesses in part (2) and (3) by the disk plates (6). In case of overload, i.e., if the torque request exceeds the preset limit, the clutch halves are separated; the remaining transmitted torque is very low. When the balls are lifted out of the recesses, against the spring pressure, the clutch part number (2) is moved in axial direction. This movement can be used to trigger an emergency-stop switch (9) for an engine. The clutch re-engages on its own as soon as the torque requirement falls below the set limit. Torque adjustment: By screwing in the torque-adjusting nut (7) all disk plates are further pretensioned (6). As soon as the desired pretension is achieved, the adjusting screw has to be fixed in position with the set screws (8).

Operating Factors

This table shows the operating factor that should - dependent on the type of application - be used as basis for calculating the correct size.

Operating Conditions

Centrifugal Moment	Uniform	Shock	Reversing
Low	1,4	1,7	2,0
Medium	1,7	2,0	2,3
High	2,0	2,4	2,6



Reworking within 24h-service possible. Custom made parts on request.

Sliding Hubs FS

Material:

Hub: Steel, zinc-plated and yellow passivated. Spring: Steel, black.

The sliding hubs can be delivered ex stock, pre-drilled with a bush of the length in **bold print**.

Required bush length:
The required bush length depends on the width of the component to be joined.

Up to Prod. No. 612 006 00:
Bush length 4.2 mm for a component width of 5.3 to 6.0 mm.

From Prod. No. 612 010 00:
Bush length in mm = 1.5 x s + b.

Other bush lengths and customized bores or feather-key grooves against extra charge.

Ordering Details: e.g.: Product No. 612 000 00, Sliding Hub FS

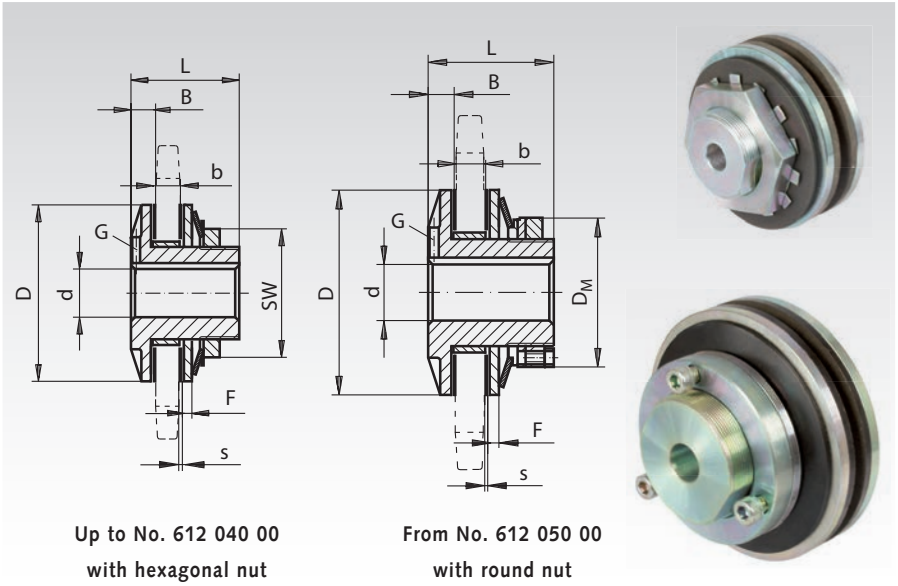

Up to No. 612 040 00 with hexagonal nut

From No. 612 050 00 with round nut

Product No	Size	Springs Qty.	Torque min. Nm	Torque max Nm	Speed max. min^{-1}	Bore d Pilot mm	Bore d max. mm	D mm	B mm	Bore of Sprocket d_1^{H8} mm	$b_{max.}$ mm	Available Bush Lengths #1 mm	#2 mm	#3 mm	F mm	s mm	L mm	SW mm	D_M mm	G mm	Weigth prebored kg
612 000 00	120-1	2	0,5	5	10000	3,7	10	30	8,5	21,0	6	**4,2**	-	-	2	2,5	31	27	-	M4	0,15
612 001 00	120-2	4	1	10	10000	3,7	10	30	8,5	21,0	6	**4,2**	-	-	2	2,5	31	27	-	M4	0,17
612 005 00	180-1	1	2	10	8500	5,7	20	45	8,5	34,0	7	**4,2**	-	-	2	2,5	33	41	-	M4	0,35
612 006 00	180-2	2	4	20	8500	5,7	20	45	8,5	34,0	7	**4,2**	-	-	2	2,5	33	41	-	M4	0,37
612 010 00	250-1	1	7	34	3000	10	22	64	16	41,33	9	**10,3**	12,2	14	5	4	48	50	-	M5	0,70
612 020 00	250-2	2	14	68	3000	10	22	64	16	41,33	9	**10,3**	12,2	14	5	4	48	50	-	M5	0,72
612 030 00	350-1	1	20	90	2500	13	25	90	19	49,28	16	10,3	**13,7**	21	5	4	62	60	-	M6	1,36
612 040 00	350-2	2	40	180	2500	13	25	90	19	49,28	16	10,3	**13,7**	21	5	4	62	60	-	M6	1,40
612 050 00	500-1	1	50	300	1600	19	40	127	21	73,10	16	**16**	19,5	21	6	4	76	-	92	M8	3,36
612 060 00	500-2	2	100	600	1600	19	40	127	21	73,10	16	**16**	19,5	21	6	4	76	-	92	M8	3,70
612 070 00	700-1	1	115	690	1200	24	60	178	25	104,88	28	17	**20,6**	22	6	5	98	-	133	M10	8,60
612 080 00	700-2	2	230	1360	1200	24	60	178	25	104,88	28	17	**20,6**	22	6	5	98	-	133	M10	8,90

* ca.-dimensions.

Size	Product No. Friction Disc*	Weight g	Product No. Disc Spring	Weight g	Product No. Threaded Ring or Adjusting Screw	Weight g	Product No. Bushes Length 1	Weight g	Product No. Bushes Length 2	Weight g	Product No. Bushes Length 3	Weight g
120-1	**612 003 00**	2	**612 004 00**	3	**612 000 07**	9	**612 000 02**	3	-	-	-	-
120-2	**612 003 00**	2	**612 004 00**	3	**612 000 07**	9	**612 000 02**	3	-	-	-	-
180-1	**612 007 00**	4	**612 008 00**	5	**612 005 07**	44	**612 005 02**	10	-	-	-	-
180-2	**612 007 00**	4	**612 008 00**	5	**612 005 07**	44	**612 005 02**	10	-	-	-	-
250-1	**612 015 00**	12	**612 016 00**	15	**612 017 00**	80	**612 012 00**	25	**612 013 00**	40	**612 014 00**	50
250-2	**612 015 00**	12	**612 016 00**	15	**612 017 00**	80	**612 012 00**	25	**612 013 00**	40	**612 014 00**	50
350-1	**612 035 00**	30	**612 036 00**	45	**612 037 00**	140	**612 032 00**	37	**612 033 00**	44	**612 034 00**	85
350-2	**612 035 00**	30	**612 036 00**	45	**612 037 00**	140	**612 032 00**	37	**612 033 00**	44	**612 034 00**	85
500-1	**612 055 00**	60	**612 056 00**	120	**612 057 00**	320	**612 052 00**	97	**612 053 00**	135	**612 054 00**	200
500-2	**612 055 00**	60	**612 056 00**	120	**612 057 00**	320	**612 052 00**	97	**612 053 00**	135	**612 054 00**	200
700-1	**612 075 00**	140	**612 076 00**	280	**612 077 00**	660	**612 072 00**	103	**612 073 00**	183	**612 074 00**	300
700-2	**612 075 00**	140	**612 076 00**	280	**612 077 00**	660	**612 072 00**	103	**612 073 00**	183	**612 074 00**	300

* 2 pieces required.

General

The sliding hubs FS are safety devices working on the positive principle. In case of overload, the disk clamped between the friction disks starts slipping and thus keeps the torque within the permissible limits. The power reengages automatically as soon as normal load is reached again. The hubs are cadmium plated for rust-protection. The drive disk is mounted on a maintenance-free bush made from sintered metal. Up to product no. 612 040 00, the torque is set with a hexagon adjusting screw. From product no. 612 050 00 the torque is set with a threaded ring with 3 hexagon nuts. On first use, the sliding hubs should be run in for about 250 turns at a speed of 60 min^{-1}. This should be done at a hub setting of 70-80% of the max. torque for one plate disk. Wear due to frequent slipping reduces the set torque. The figures in the table are calculated for dry operation.

With oil the load can be reduced by 50%. Higher torques, at the same outer diameter, can be achieved with a second spring disk.

Exception: Product No. 612 000 00 has 2 springs,
Product No. 612 001 00 has 4 springs.

Mounting instruction at **www.maedler.de** in the section **Downloads**.



Reworking within 24h-service possible. Custom made parts on request.

Sliding Hubs FA as Torque Limiters for Chain-, Gear- and Belt Drive-wheels

Material: Steel, zinc-plated and chromated.

- High-quality version.
- The slipping torque can be adjusted with common assembly tools for screws, also after mounting.
- By mounting additional springs, the torque range can be increased. (additional springs have to be ordered separately).
- The hubs are delivered with pilt bore and max. bush length. Customized bores, key-ways and bush lengths at extra charge.

Required bush length:
The bush length required depends on the width of the component to be joined. To calculate the bush length take the width of the component and add 1.5 times the thickness of the friction disc, plus an additional 0.5mm.

Bush length in mm = 1.5 x s + b + 0.5.

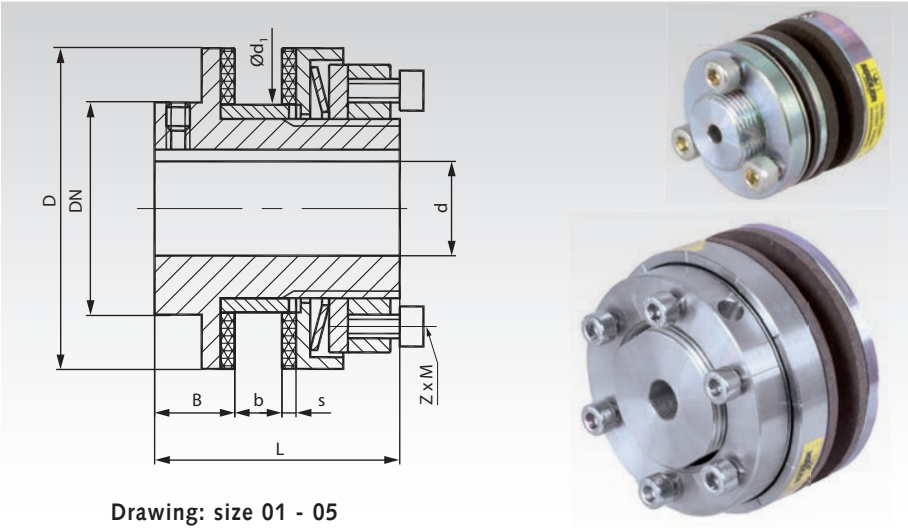

Drawing: size 01 - 05

Ordering Details: e.g.: Product No. 612 100 00, Sliding Hub FA size 00

Product No	Size	Torque range 1 Spring[1] Nm	Torque range 2 Springs[2] Nm	Speed max. min^{-1}	Bore Pilot mm	Bore $d_{max.}$ mm	D mm	DN mm	B mm	Bore of Sprocket d_1^{H8} mm	Width $b_{min.}$ mm	Width $b_{max.}$ mm	Bush length min. mm	Bush length max. mm	s mm	L mm	Screws Z x M mm	Weight prebored kg
612 100 00	00	0,5-5	1-10	10000	3,7	10	30	-	8,5	21	2	6	6	10	2,5	31	3x M4	0,1
612 100 10	0	2-10	4-20	8500	5,7	20	45	-	8,5	35	2	6	6	10	2,5	33	6x M4	0,3
612 101 00	01	5-35	10-70	6600	10	22	58	40	16	40	3	8	8	13	3	45	6x M4	0,6
612 101 10	1	20-75	40-150	5600	10	25	68	45	17	44	3	10	8	15	3	52	6x M5	0,9
612 102 00	2	25-140	50-280	4300	14	35	88	58	19	58	4	12	9	17	3	57	6x M6	1,8
612 103 00	3	50-300	100-600	3300	18	45	115	75	21	72	5	15	11	21,5	4	68	6x M8	3,4
612 104 00	4	90-600	180-1200	2700	24	55	140	90	23	85	6	18	12	24,5	4	78	6x M8	5,5
612 105 00	5	280-800	800-1600	2200	28	65	170	102	29	98	8	20	16	28	5	92	6x M8	8,8
612 106 00	6	300-1200	600-2400	1900	38	80	200	120	31	116	8	23	16	31	5	102	8x M20	14,0
612 107 00	7	600-2200	1200-4400	1600	45	100	240	150	33	144	8	25	16	33	5	113	12x M20	22,6
612 108 00	8	900-3400	1800-6800	1300	58	120	285	180	35	170	8	25	16	33	5	115	16x M20	33,6

[1] With one disc spring (standard version). [2] With second disc spring (order separately).

Replacement Friction Discs and additional Disc Springs

Matching Sliding Hub Product No.	Size	Outer Ø mm	Product No. Friction Disc[1]	Weight g	Product No. Disc Spring	Weight g
612 100 00	00	30	**612 100 01**	2	**612 100 02**	5
612 100 10	0	45	**612 100 11**	3	**612 100 12**	5
612 101 00	01	58	**612 101 01**	10	**612 101 02**	10
612 101 10	1	68	**612 101 11**	13	**612 101 12**	20
612 102 00	2	88	**612 102 01**	21	**612 102 02**	40
612 103 00	3	115	**612 103 01**	51	**612 103 02**	100
612 104 00	4	140	**612 104 01**	79	**612 104 02**	200
612 105 00	5	170	**612 105 01**	157	**612 105 02**	400
612 106 00	6	200	**612 106 01**	216	**612 106 02**[2]	320
612 107 00	7	240	**612 107 01**	250	**612 107 02**[3]	480
612 108 00	8	285	**612 108 01**	400	**612 108 02**[4]	640

[1] 2 pieces required. [2] Set with 16 springs. [3] Set with 24 springs. [4] Set with 32 springs.

Remarkes to the versions

The pictures above show size 01 to 5.
Sizes 00 and 0 are on the left side without hub.
From size 6, instead of the central disc spring, there are pairs of little disc springs around each preload screw.

Customized bores, keyways and bush lengths are available at extra charge.

Technical Explanations

The driving element (sprocket or pulley) is pushed onto the bush and clamped between the friction discs, supported by the round adjusting nut, the pressure plate, preload screws and the disk spring. The harder the disk spring is compressed by the pressure plate, the higher is the torque at which the driving element slips. The exact adjustment values for the torque can be found in the table stuck onto the sliding hubs.

Mounting instruction at **www.maedler.de** in the section **Downloads**.

Torque – Increase

The torque values refer to the sprocket version with ground surfaces. Non-ground surfaces lead to faster wear of the friction disks.

Wear due to frequent slipping reduces the set torque.

At all sizes, the specified torque can be doubled by the addition of a (second) disc spring. The torque ranges with one or two disc springs are shown in the table.

At sizes from 01 to 5, the specified torque can be tripled by the addition of a (third) disc spring. The minimum torque setting is then approx. 65% of the maximum value.

Sliding Hubs FAK as Torque Limiters, with Clamp Hub

Material: Steel, zinc-plated and chromated.

- Clamp hub version.
- The slipping torque can be adjusted with common assembly tools for screws, also after mounting.
- By mounting an additional springs the torque range can be increased (additional spring has to be ordered separately).
- The hubs are delivered with pilt bore and max. bush length. Customized bores, keyways and bush lengths at extra charge.

Required bush length:
The bush length required depends on the width of the component to be joined. To calculate the bush length take the width of the component and add 1.5 times the thickness of the friction disc, plus an additional 0.5mm.

Bush length in mm = 1.5 x s + b + 0.5.

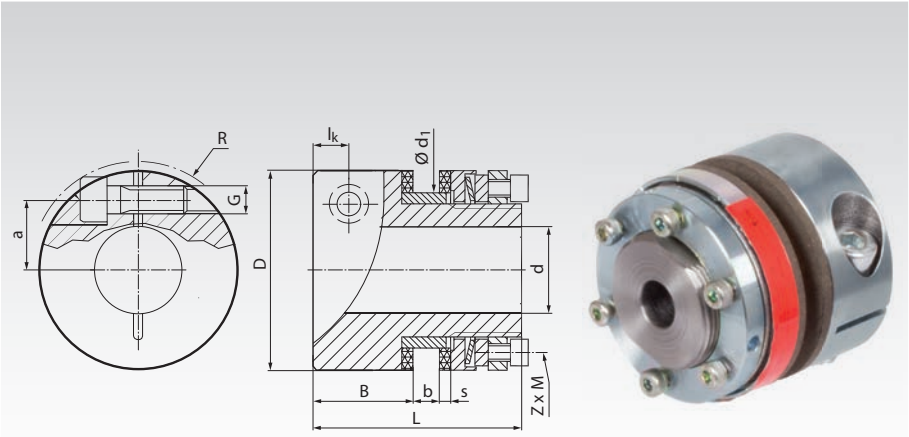

Ordering Details: e.g.: Product No. 612 110 10, Sliding Hub FAK size 0

Product No.	Size	Torque range 1 Spring[1] Nm	Torque range 2 Springs[2] Nm	Speed max. min^{-1}	Bore Pilot mm	Bore $d_{max.}$ mm	D mm	B mm	Bore of Sprocket d_1^{H8} mm	Width $b_{min.}$ mm	Width $b_{max.}$ mm	Bush length min. mm	Bush length max. mm	s mm	L mm	Screws Z x M mm	Weight prebored kg
612 110 10	0	2 - 10	4 - 20	8500	10	22	45	21,5	35	2	6	6	10	2,5	46	6x M4	0,3
612 111 00	01	5 - 35	10 - 70	6600	10	25	58	26	40	3	8	8	13	3	55	6x M4	0,6
612 111 10	1	20 - 75	40 - 150	5600	18	28	68	30	44	3	10	8	15	3	65	6x M5	0,9
612 112 00	2	25 - 140	50 - 280	4300	18	40	88	34	58	4	12	9	17	3	72	6x M6	1,8

Clamp Screw Dimensions and Fastening Torque

Size	R mm	G mm	T_A Nm	l_K mm	a mm
0	50	M6	16	8	16
01	62	M8	41	10	19
1	74	M10	83	12	22
2	93	M12	145	14	30

[1] With one disc spring (standard version).
[2] With second disc spring (order separately).

Replacement Friction Discs and additional Disc Springs

Matching Sliding Hub Product No.	Size	Outer Ø mm	Product No. Friction Disc[1]	Weight g	Product No. Disc Spring	Weight g
612 110 10	0	45	**612 100 11**	3	**612 100 12**	5
612 111 00	01	58	**612 101 01**	10	**612 101 02**	10
612 111 10	1	68	**612 101 11**	13	**612 101 12**	20
612 112 00	2	88	**612 102 01**	21	**612 102 02**	40

[1] 2 pieces required.

Remarkes to the versions

The pictures above show size 01 to 2.
Size 0 is on the left side without hub.

Customized bores, keyways and bush lengths are available at extra charge.

Technical Explanations

The driving element (sprocket or pulley) is pushed onto the bush and clamped between the friction discs, supported by the round adjusting nut, the pressure plate, preload screws and the disk spring. The harder the disk spring is compressed by the pressure plate, the higher is the torque at which the driving element slips. The exact adjustment values for the torque can be found in the table stuck onto the sliding hubs.

Torque – Increase

The torque values refer to the sprocket version with ground surfaces. Non-ground surfaces lead to faster wear of the friction disks.

Wear due to frequent slipping reduces the set torque.

At all sizes, the specified torque can be doubled by the addition of a (second) disc spring. The torque ranges with one or two disc springs are shown in the table.

Operating Instructions at www.maedler.de in the section Downloads

ROBA®-Sliding Hubs as Torque Limiters for Chain-, Gear- and Belt Drive-wheels

Material: Steel, zinc-phosphated.

ROBA®-sliding hubs are high-quality machine components. They are machined all-round and zinc-phosphated, i.e. rust-proof. They are of fully-closed design.

The sliding hubs are delivered pre-drilled with the max bush length (for b_{max}).

Required bush length:
The bush length required depends on the width of the component to be joined. To calculate the bush length take the width of the component and add 1.5 times the thickness of the friction lining, plus an additional 0.5mm.

Bush length in mm = b + 1.5 x s + 0.5.

Other bush lengths, customized bores feather-key grooves and setscrew-threads available at extra charge.

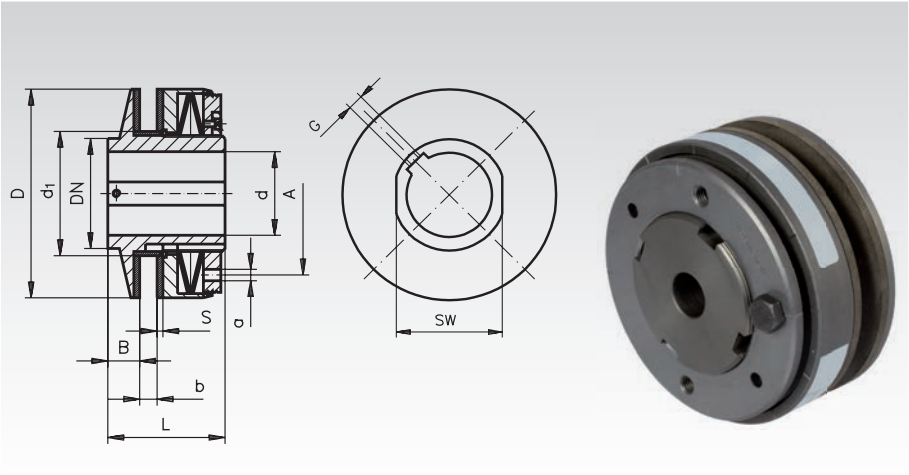

Pictured version for up to 700 Nm max.

Ordering Details: e.g.: Product No. 612 300 00, ROBA-Sliding Hub

Product No.	Size	Torque min. Nm	Torque max. Nm	Speed max. min^{-1}	Clamping Tool A mm	Clamping Tool $a^{-0,2}$ mm	B mm	$b_{min.}$ mm	$b_{max.}$ mm	D mm	DN mm	Sprocket Bore d_1^{H8} mm	d max. mm	Pilot Bore mm	Set Screw G mm	L mm	SW mm	Lining S mm	Weight Pre-drilled g
612 300 00	0	2	10	8500	37	3	8,5	2	6	45	45	35	20[1)]	6	M4	33	-	2,5	300
612 320 00	1	14	70	5600	50	5	17	3	10	68	45	44	25	10	M*	52	41	3	900
612 340 00	2	26	130	4300	67	6	19	4	12	88	58	58	35	14	M**	57	50	3	1600
612 360 00	3	50	250	3300	84	6	21	5	15	115	75	72	45	18	M***	68	65	4	3100
612 380 00	4	110	550	2700	104	7	23	6	18	140	90	85	55	24	M8	78	80	4	5400
612 400 00	5	140	700	2200	125	8	29	8	20	170	102	98	65	28	M8	92	90	5	9000
612 420 00	6	240	1200	1900	150	8	31	8	23	200	120	116	80	38	M8	102	105	5	12400

M* Up to Ø12 M4, above Ø12 M5, above Ø17 M6.
M** Up to Ø 17 M5, above Ø 17 M6.
M*** Up to Ø 22 M6, above Ø 22 M8.

[1)] Above Ø19 only with keyway DIN6885/3.

Replacement Friction Linings and Face Spanners

Matching Product No.	Product No. Spare Part Friction Lining*	Weight g	Product No. Face Spanner	Weight g
612 300 00	**612 301 00**	3	**612 302 00**	114
612 320 00	**612 321 00**	13	**612 322 00**	159
612 340 00	**612 341 00**	21	**612 342 00**	240
612 360 00	**612 361 00**	51	**612 342 00**	240
612 380 00	**612 381 00**	79	**612 382 00**	750
612 400 00	**612 401 00**	157	**612 402 00**	1700
612 420 00	**612 421 00**	216	**612 402 00**	1700

* 2 pieces required.

Technical Explanations

The driving element (sprocket or pulley) is pushed onto the bush and clamped between the friction disks, supported by the pressure plate, the disk springs and the adjusting nut. The harder the disk springs are compressed by the adjusting nuts, the higher is the torque at which the driving element slips. The exact adjustment values for the torque can be found in the table stuck onto the sliding hubs.

The torque values refer to the sprocket version with ground surfaces. Non-ground surfaces lead to faster wear of the friction disks.

Wear due to frequent slipping reduces the set torque.

Torque – Increase

Changing the series stacking shown to a parallel stacking the maximum torque can be doubled. The minimum torque setting is then approx. 50% of the maximum value.

For product no. 612 320 00 to 612 400 00 the specified torque can be tripled by the addition of a (third) spring washer. The minimum torque setting is then approx. 65% of the maximum value.

For Product No. 612 360 00 to 612 400 00 this requires a special adjusting nut, and the pressure plate has to be shortened (both against surcharge).

Overview Universal Joints

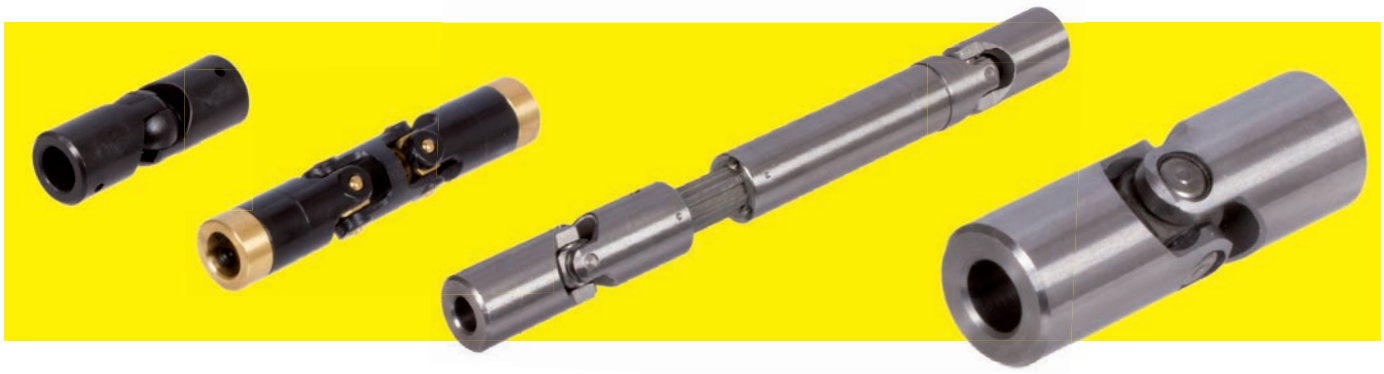

Single Universal Joints

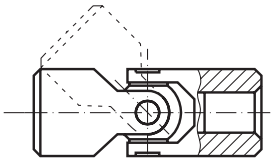

Type	Material	Bearings	Bores mm	Torques* max. Nm	Speeds* max. min^{-1}	Page
UKM	Plastic	Plain bearings	2 - 10	0,11 - 1,6	1000	406
GF	Plastic	Plain bearings	8 - 16	5 - 22	1000	405
KE	Steel	Plain bearings	0 - 40	2 - 550	1000	412
WEL	Steel	Plain bearings	6 - 30	6,6 - 430	800	408
RW	Steel	Plain bearings	6 - 45	6 - 820	500	413
WE	Steel	Plain bearings , hardened	6 - 40	7 - 504	800	409
WEN	Steel	Needle bearings, hardened	8 - 40	5,8 - 365	4000	410
WER	Stainless Steel	Plain bearings	6 - 30	3,5 - 250	800	411

Double Universal Joints

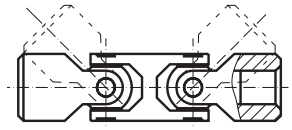

Type	Material	Bearings	Bores mm	Torques* max. Nm	Speeds* max. min^{-1}	Page
UKD	Plastic	Plain bearings	3 - 10	0,08 - 10	1000	406
WDL	Steel	Plain bearings	6 - 30	5,9 - 380	800	408
WD	Steel	Plain bearings , hardened	6 - 40	6,3 - 453	800	409
WDN	Steel	Needle bearings, hardened	10 - 40	19,8 - 328	4000	410
WDR	Stainless Steel	Plain bearings	12 - 30	3,2 - 225	800	411

Telescopic Double Universal Joints

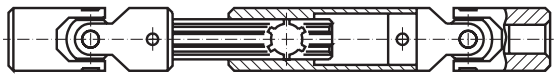

Type	Material	Bearings	Bores mm	Torques* max. Nm	Speeds* max. min^{-1}	Page
UW	Plastic	Plain bearings	2 - 20	0,36 - 10,7	800	407
LW	Steel	Plain bearings	6 - 45	6 - 820	500	413
PW	Steel	Plain bearings , hardened	10 - 30	25 - 432	800	414
PWN	Steel	Needle bearings, hardened	10 - 35	20 - 293	4000	414
PWR	Stainless Steel	Plain bearings	10 - 25	13 - 192	800	415

* The max. permissible speeds can differ for each size.
The max. permissible torques depend on the speed and working angle.
See details and notes on the product pages.

Bellows Page 415



Universal Joints, General Information

Universal joints and universal shafts are today, and will be in future, absolutely essential and versatile components for transferring rotary motion and transmitting torque from the driving to the driven unit.

If two shafts set at a certain angle are connected using a single universal joint and one shaft turns with constant velocity, the other shaft will move irregularly. This non-uniformity – also called gimbal error – means that angle of rotation of the second shaft slightly lags behind or leads the movement off the first shaft, with kind of sinus-shaped variations. The greater the operating angle α, the greater the non-uniformity in motion of the second shaft.

Thus single universal joints are only used in applications where non-uniformity of rotation is acceptable. This non-uniformity can be compensated by either using two single universal joints in sequence - thus forming a universal shaft - or by using a double universal joint. When properly installed, the second universal joint can compensate the non-uniform rotation of the first universal joint, that is under the following preconditions, as described in DIN 808:

1. Correct yoke orientation: when two single universal joints are used, please make sure that the yokes of the inbound joints, or brackets for the bracket-version, are properly aligned – as for double universal joints.

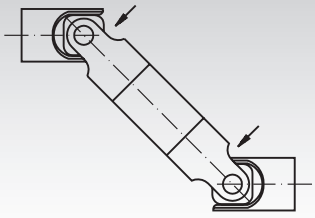

CORRECT: yoke orientation properly aligned

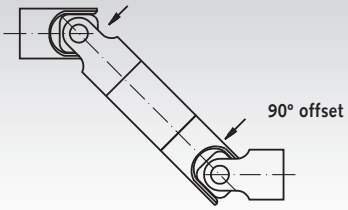

INCORRECT: yoke orientation offset by 90°

2. The operating angle must be the same at both ends.

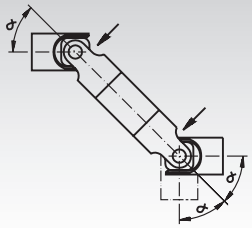

CORRECT : angle α is the same everywhere

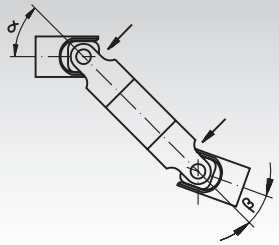

INCORRECT: angle α and β are different

3. When position of driving and driven shaft is changed, they must always be moved in parallel.

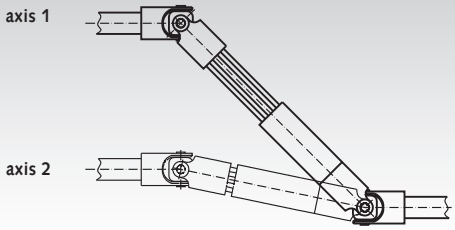

CORRECT : axis 1 is parallel to axis 2

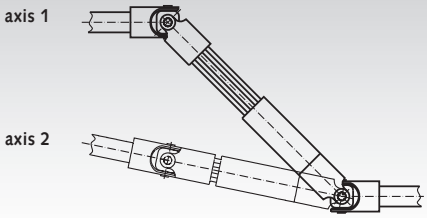

INCORRECT: axis 1 is not parallel to axis 2

4. The universal-joint shaft – or the double universal joint – should be supported as close as possible to the universal joints.

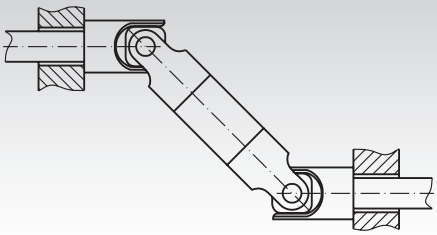

CORRECT : bearing positioned as close as possible

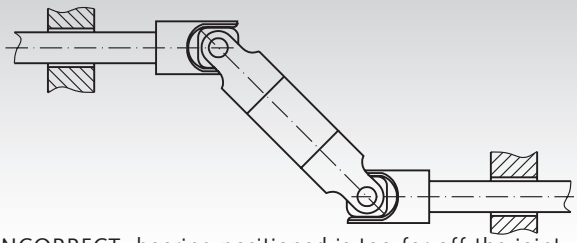

INCORRECT: bearing positioned is too far off the joint

The universal joints are supplied without pinholes and split pins. The length of the split pin is determined by the outer diameter of the universal joint, i.e. the pin must be flush when inserted.

We recommend Split Pins accord. to DIN 1481.

Bore Ø	6	8	10	12	16	20	25	32	40	50
Pin Ø	2	3	4	5	6	8	10	12	14	16

Calculating the Size of the Universal Joint

When selecting the most suitable universal joint, the highest transmittable torque is not the only decisive figure. Other operation conditions such as shock load, angle ratios, speeds etc. also need to be considered. The adjoining diagram therefore helps to determine a first rough sizing for the universal joint, and shows the respective reference values.

The respective reference value for smaller operating angles under 10°, between 0° and 5°, is 25% higher.

For larger operating angles above 40° to 45° (maximum) we can only recommend manual operation.

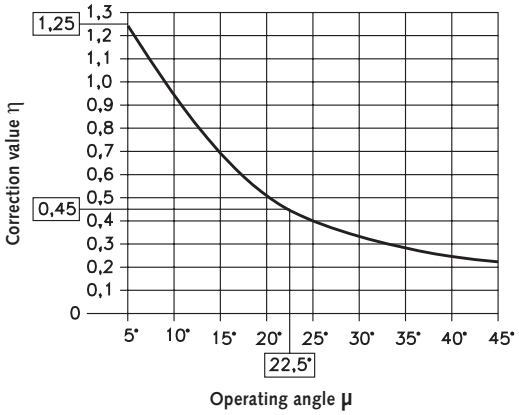

Corrective Values Subject to the Operating Angle.

Lubrication / Maintenance of Universal Joints

Maintenance of universal joints is limited to adequate lubrication, which has to be carried out at intervals (depending on the application). For dusty work environments, universal joints should be protected with bellows. The bellows can be filled with grease. This renders the joints maintenance-free.

Bellows

page 415



Ball Joints GF made from Plastic

Material: Polyacetal, glass-fibre reinforced.

Temperature range: -30°C to +50°C.

Max. operating angle 35°. Dimensions according to DIN 808.

For the joining, taper pins, dowel pins or grooved pins can be used. The joints are maintenance-free and can therefore be used in difficult-to-access parts of the machine. Other advantages compared to steel are less weight, corrosion resistance and chemical resistance.

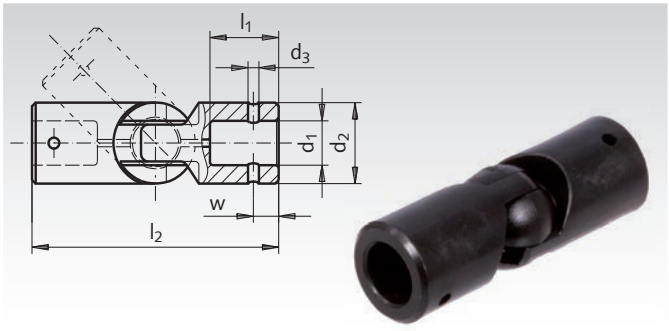

Ordering Details: e.g.: Product No. 631 416 00, Ball joint GF, 8 mm bore

Product No.	d_1 mm	d_2 mm	d_3 mm	l_1 mm	l_2 mm	w mm	Torque max. Nm	Speed at Operation Angle 10° max. min^{-1}	Weight g
631 416 00	$8^{\pm 0,04}$	$16^{\pm 0,2}$	$3^{+0,1}$	10,5	40	$4^{-0,1}$	5	1000	9
631 420 00	$12^{\pm 0,05}$	$20^{\pm 0,2}$	$3^{+0,1}$	17,0	61	$6^{-0,1}$	15	1000	18
631 425 00	$16^{\pm 0,05}$	$25^{\pm 0,2}$	$6^{+0,1}$	20,5	74	$10^{-0,1}$	22	1000	35



Reworking within 24h-service possible. Custom made parts on request.

Cardan Joints UKM made from Plastic

Material: Polyacetal (black).
Metal caps and crosspiece made from brass.

Max. operating angle 45°.
These cardan joints are fixed on the shafts with Allen screws.

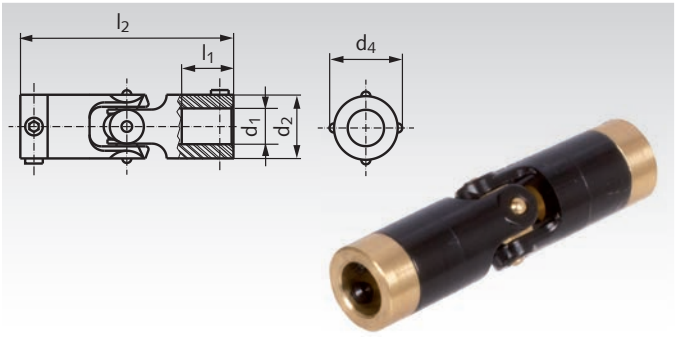

Ordering Details: e.g.: Product No. 630 230 00, Cardan Joint UKM, 2 mm bore

Product No.	$d_1^{+0,03}$ mm	d_2 mm	d_4 mm	l_1 mm	l_2 mm	Torque Nm	Gewicht g
630 230 00	2	6,35	7,1	9,3	27,2	0,11	3
630 231 00	3	6,35	7,1	9,3	27,2	0,11	3
630 234 00	3	9,5	11,1	13,1	37,6	0,36	8,5
630 235 00	4	9,5	11,1	13,1	37,6	0,36	8,5
630 239 00	4	12,7	14,3	15,7	46,2	0,85	17
630 240 00	6	12,7	14,3	15,7	46,2	0,85	17
630 243 00	6	16,1	17,5	22,3	67,6	1,6	34
630 244 00	8	16,1	17,5	22,3	67,6	1,6	34
630 245 00	10	16,1	17,5	22,3	67,6	1,6	34

Double Cardan Joints UKD made from Plastic

Material: Polyacetal (black).
Metal caps and crosspiece made from brass.

Max. operating angle 45°.
These cardan joints are fixed on the shafts with Allen screws.

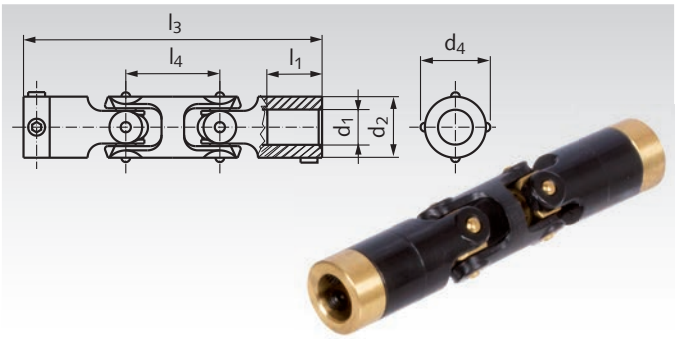

Ordering Details: e.g.: Product No. 630 331 00, Cardan Joint UKD, 3 mm bore

Product No.	$d_1^{+0,03}$ mm	d_2 mm	d_4 mm	l_1 mm	l_3 mm	l_4 mm	Torque max. Nm	Weight g
630 331 00	3	6,35	7,1	9,3	35,3	8,1	0,08	3,5
630 334 00	3	9,5	11,1	13,1	50,8	13,2	0,16	11,1
630 335 00	4	9,5	11,1	13,1	50,8	13,2	0,16	11,1
630 336 00	5	9,5	11,1	13,1	50,8	13,2	0,16	11,1
630 339 00	4	12,7	14,3	15,7	62,1	15,9	0,59	21,6
630 340 00	6	12,7	14,3	15,7	62,1	15,9	0,59	21,6
630 343 00	6	16,1	17,5	22,3	89,8	22,2	1,3	42,4
630 344 00	8	16,1	17,5	22,3	89,8	22,2	1,3	42,4
630 345 00	10	16,1	17,5	22,3	89,8	22,2	1,3	42,4



Reworking within 24h-service possible. Custom made parts on request.

Telescopic Universal-Joint Shafts UW Made from Plastic and Brass

Material: Polyacetal (black).
Metal caps and Cross-pieces: Brass.

Joint faces are fitted with brass inserts, with 2 set screws per hub.

Temperature range: -20 °C to + 60 °C.

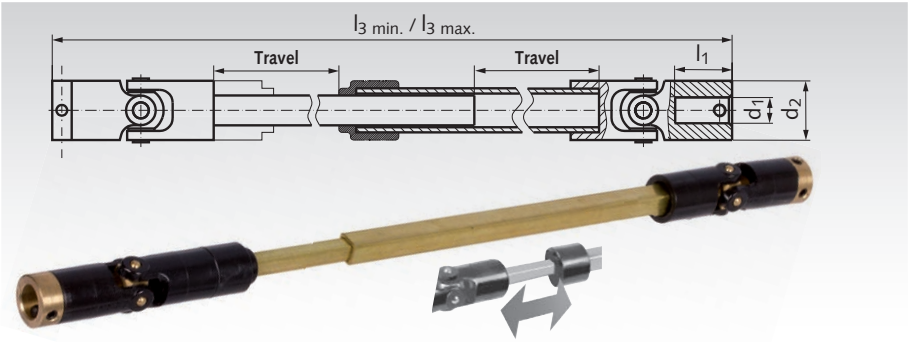

Ordering Details: e.g.: Product No. 630 811 00, Telescopic Universal-Joint Shaft UW, 5 mm Bore

Product No.	d_1 +0,03** mm	d_2 +/-1 mm	l_1 mm	$l_{3\ min.}$ mm	$l_{3\ max.}$ mm	Travel mm	Peak Torque Nm*	Weight g
630 811 00[1)]	5,0	11,1	13,1	240	389	149	0,36	36
630 814 00[1)]	5,0	14,3	15,7	300	484	184	0,85	58
630 817 00[1)]	10,0	17,5	22,3	450	730	280	1,60	168
630 823 00[2)]	10,0	23,0	17,0	464	745	281	2,80	241
630 828 00[2)]	12,7	28,5	20,0	500	784	284	5,60	457
630 836 00[2)]	20,0	36,5	21,0	564	868	304	10,70	827

* The stated peak torque refers to Lmin. (telescope retracted).
The max. torque for extended telescope has to be determined empirically and subject to the respective application.
** Bore-reducing bushes see below.
1) Joint faces fitted with brass inserts with 2 set screws per hub.
2) Joints only fitted with metal inserts, without set screws.

Note

Telescopic universal-joint shafts (teleshafts) made from plastic and brass are practical if the distance between driving and driven unit varies during operation, or if changes in components need to be compensated or if, simply, fast disconnection of a drive unit is required.
These teleshafts are designed for light duty. Precisely-drawn, square brass tubes, which can easily be shortened, serve as means of transmission. The profiled parts eliminate any torsional play which may occur inside the bushes due to tolerances. To shorten the teleshafts, please always cut off the same length on either side.

Bore-Reducing Bushes for Further Bores at Telescopic Universal-Joint Shafts, Product No. 630 811 00 to 630 836 00

Material:
Product No. 622 302 05 up to 622 304 05 made from brass.
Product No. 622 303 05 up to 622 318 20 made from aluminium.

To guarantee an optimum shaft-hub connection, the bore-reducing bush should be used as follows:
"S" indicates the adjusting screw inside the adjusting-screw hub.
"T" indicates tangential attachment screws for the clamping hub.
"F" indicates the recommended positioning of the flattened shaft with adjusting-screw hubs.

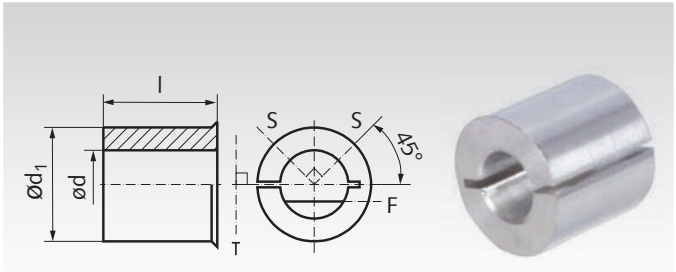

Ordering Details: e.g.: Product No. 622 302 05, Bore-Reducing Bush, 2 mm Bore

Product No.	Matching Universal-Joints	d +0,03 mm	d_1 mm	l mm	Weight g
622 302 05	630 811 00	2	5	4,3	1
622 303 05	630 811 00	3	5	4,3	1
622 304 05	630 811 00	4	5	4,3	1
622 303 05	630 814 00	3	5	4,3	1
622 304 05	630 814 00	4	5	4,3	1
622 304 10	630 817 00	4	10	8,1	1
622 305 10	630 817 00	5	10	8,1	1
622 306 10	630 817 00	6	10	8,1	1
622 308 10	630 817 00	8	10	8,1	1
622 304 10	630 823 00	4	10	8,1	1
622 305 10	630 823 00	5	10	8,1	1
622 306 10	630 823 00	6	10	8,1	1
622 308 10	630 823 00	8	10	8,1	1

Product No.	Matching Universal-Joints	d +0,03 mm	d_1 mm	l mm	Weight g
622 305 12	630 828 00	5	12,7	10,7	3
622 306 12	630 828 00	6	12,7	10,7	3
622 308 12	630 828 00	8	12,7	10,7	3
622 309 12	630 828 00	9	12,7	10,7	3
622 310 12	630 828 00	10	12,7	10,7	3
622 310 20	630 836 00	10	20	20	6
622 312 20	630 836 00	12	20	20	6
622 314 20	630 836 00	14	20	20	6
622 315 20	630 836 00	15	20	20	6
622 316 20	630 836 00	16	20	20	6
622 318 20	630 836 00	18	20	20	6

Please note that concentricity and constant velocity can be influenced by mounted bushes. To achieve the best possible performance, we recommend using shafts of tolerance class h6. Undersized shafts are less effective. For the same reason we would not recommend using flattened shafts with more than 1/4 of the diameter removed.

Single Universal Joints WEL Similar to DIN 808

Material: Steel.

Max. Operating Angle 45°.

These low-price, single universal joints are especially suited for manual operation at low torques. As the contact surfaces are not hardened/ground, they can only be used at high speeds for short intervals.

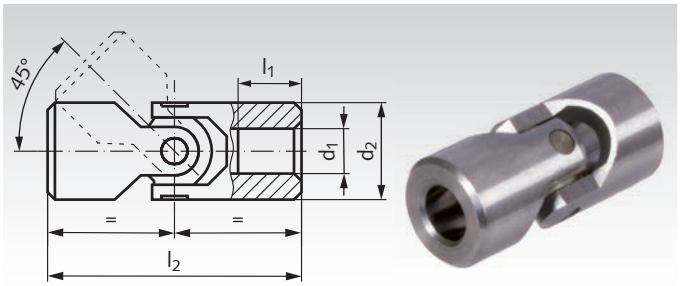

Ordering Details: e.g.: Product No. 630 613 00, Universal Joint WEL, 6 mm Bore

Product No.	d_1 H7 mm	d_2 mm	l_1 mm	l_2 mm	permissible max. Torques in Nm* at different Speeds 100 min^{-1}	200 min^{-1}	300 min^{-1}	400 min^{-1}	500 min^{-1}	700 min^{-1}	800 min^{-1}	Weight kg
630 613 00	6	13	13	40	6,6	6	5,3	4,8	4,4	-	-	0,03
630 616 00	8	16	10	40	13	9	8	7	6	5,2	4,7	0,04
630 620 00	10	20	10	45	25	17	15	12	11	10	7	0,08
630 625 00	12	25	11	50	45	25	21	16	14	11	9	0,14
630 629 00	14	29	13	56	70	45	40	33	30	26	22	0,20
630 632 00	16	32	15	65	88	85	72	55	50	43	34	0,29
630 637 00	18	37	17	72	160	120	100	68	58	54	-	0,44
630 640 00	20	40	19	82	240	170	120	90	80	72	-	0,57
630 647 00	22	47	22	95	300	200	150	110	93	-	-	0,93
630 650 00	25	50	27	108	390	250	180	140	115	-	-	1,19
630 658 00	30	58	30	122	430	330	200	150	128	-	-	1,72

* Only for short intervals.

Bellows
page 415



Double Universal Joints WDL Similar to DIN 808

Material: Steel.

Max. Operating Angle 90°.

These low-price, single universal joints are especially suited for manual operation at low torques. As the contact surfaces are not hardened/ground, they can be only used at high speeds for short intervals.

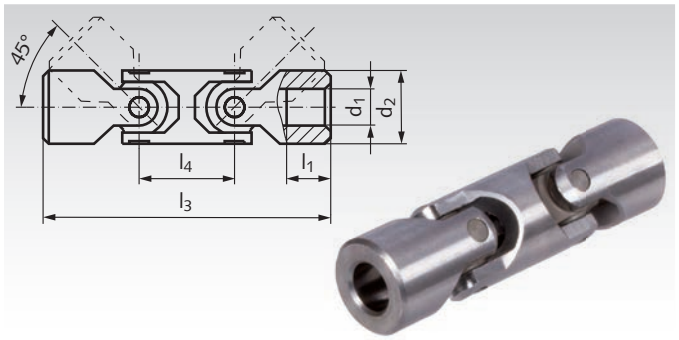

Ordering Details: e.g.: Product No. 630 713 00, Universal Joint WDL, 6 mm Bore

Product No.	d_1 H7 mm	d_2 mm	l_1 mm	l_3 mm	l_4 mm	permissible max. Torques in Nm* at different Speeds 100 min^{-1}	200 min^{-1}	300 min^{-1}	400 min^{-1}	500 min^{-1}	700 min^{-1}	800 min^{-1}	Weight kg
630 713 00	6	13	13	63	23	5,9	5,4	4,8	4,3	3,9	-	-	0,07
630 716 00	8	16	10	67	27	11	8,1	7,2	6,3	5,4	4,7	4,2	0,07
630 720 00	10	20	10	74	29	22	15	13	11	9,9	9	6,3	0,08
630 722 00	12	22	11	74	29	40	22	19	14	12	10	8,1	0,13
630 725 00	14	25	13	85	33	63	40	36	29	27	23	20	0,19
630 729 00	16	29	19	100	35	79	76	64	49	45	38	30	0,31
630 732 00	18	32	20	112	39	144	108	90	61	52	48	-	0,44
630 740 00	20	40	19	128	46	216	153	108	81	72	64	-	0,82
630 741 00	22	40	25	145	46	270	180	135	99	83	-	-	0,94
630 750 00	25	50	24	163	59	350	225	160	126	103	-	-	1,56
630 758 00	30	58	30	182	66	380	295	180	135	115	-	-	2,43

* Only for short intervals.

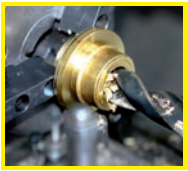

Reworking within 24h-service possible. Custom made parts on request.

Precision Universal Joints Similar to DIN 808

These single and double universal joints feature a simple design with very small tolerances and high precision and performance. A special grinding process realizes a perfect parallelism of the axes and the single parts of the joints - this guarantees an extremely long service life. All contact surfaces are hardened, ground and lapped. These universal joints are used at high torques and high speeds up to max. 800 min^{-1}.

Single Precision Universal Joints WE Similar to DIN 808

Material: Steel 35SMnPb10, Bearing Parts 18NiCrMo5Pb. Contact surfaces hardened, ground and lapped.

Max. Operating Angle 45°.

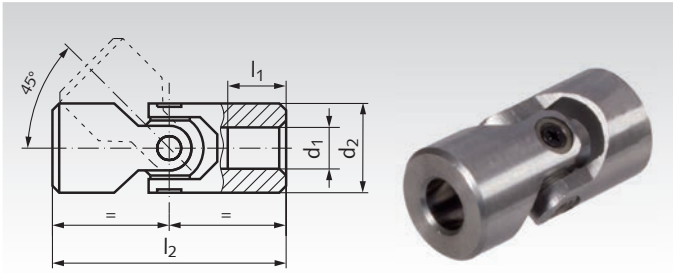

Ordering Details: e.g.: Product No. 631 215 00, Universal Joint WE, 6 mm Bore

Product No.	d_1^{H7} mm	d_2 mm	l_1 mm	l_2 mm	permissible max. Torques in Nm at different Speeds 100 min^{-1}	200 min^{-1}	300 min^{-1}	400 min^{-1}	500 min^{-1}	700 min^{-1}	800 min^{-1}	Weight kg
631 215 00	6	16	9	34	7	6,5	6	5,5	5	-	-	0,04
631 216 00	8	16	11	40	14	10	9,5	8	7	6	5,4	0,04
631 218 00	8	18	11	40	16	11	11	9	7,9	6,8	6,1	0,07
631 220 00	10	22	10	45	25	17	15	13	12	11	7,5	0,09
631 222 00	10	22	12	48	25	17	15	13	12	11	7,5	0,10
631 226 00	12	25	11	50	43	25	21	17	16	13	12	0,20
631 227 00	12	26	13	56	43	25	21	17	16	13	12	0,16
631 229 00	14	29	13	56	69	43	40	36	34	29	27	0,18
631 230 00	14	29	17	60	69	43	40	36	34	29	27	0,21
631 232 00	16	32	15	65	87	84	72	58	52	41	36	0,33
631 233 00	16	32	18	68	87	84	72	58	52	41	36	0,34
631 237 00	18	37	17	72	156	120	96	72	60	48	-	0,39
631 238 00	18	37	18	74	156	120	96	72	60	48	-	0,42
631 240 00	20	40	19	82	240	168	120	96	84	60	-	0,54
631 242 00	20	42	19	82	252	176	126	101	88	63	-	0,62
631 247 00	22	47	22	95	300	192	144	120	96	72	-	0,86
631 250 00	25	50	26	108	384	240	168	144	120	96	-	1,06
631 252 00	25	52	26	105	400	250	175	150	125	-	-	1,31
631 258 00	30	58	30	122	432	264	192	156	132	-	-	1,67
631 270 00	35	70	35	140	456	300	228	174	144	-	-	2,76
631 280 00	40	80	42	160	504	336	264	216	-	-	-	4,28

Double Precision Universal Joints WD Similar to DIN 808

Material: Steel 35SMnPb10, Bearing Parts 18NiCrMo5Pb. Contact surfaces hardened, ground and lapped.

Max. Operating Angle 90°.

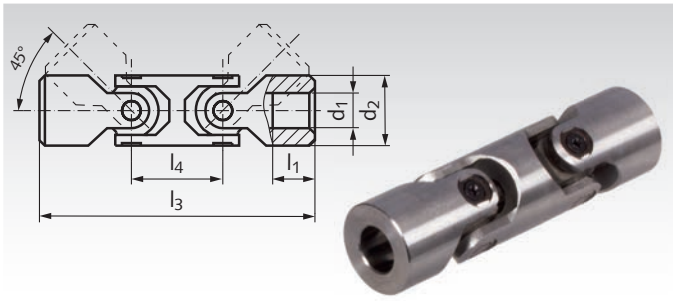

Ordering Details: e.g.: Product No 631 715 00, Universal Joint WD, 6 mm Bore

Product No.	d_1^{H7} mm	d_2 mm	l_1 mm	l_3 mm	l_4 mm	permissible max. Torques in Nm at different Speeds 100 min^{-1}	200 min^{-1}	300 min^{-1}	400 min^{-1}	500 min^{-1}	700 min^{-1}	800 min^{-1}	Weight kg
631 715 00	6	16	- *	61	27	6,3	5,8	5,4	4,9	4,5	-	-	0,07
631 716 00	8	16	- *	67	27	12,6	9	8,5	7,2	6,3	5,4	4,8	0,07
631 720 00	10	20	- *	75	30	22	15,3	13	11,7	10,8	9,9	6,7	0,08
631 726 00	12	22	11	74	29	38	22	18	15	13	11	10	0,13
631 729 00	14	25	13	85	33	61	38	35	32	30	25	23	0,19
631 732 00	16	29	19	100	35	77	75	64	51	46	36	32	0,31
631 737 00	18	32	20	112	39	140	108	86	64	54	43	-	0,44
631 740 00	20	40	19	128	46	216	151	108	86	75	54	-	0,82
631 747 00	22	40	25	145	48	270	172	129	108	86	64	-	0,94
631 750 00	25	50	24	163	59	345	216	151	129	108	86	-	1,56
631 758 00	30	58	28	182	66	388	237	172	140	118	-	-	2,43
631 770 00	35	70	32	212	78	410	270	205	156	129	-	-	4,01
631 780 00	40	80	38	245	95	453	203	237	194		-	-	6,55

* Through-bore.

Precision Needle-Bearing Universal Joints DIN 808

The needle-bearing universal joints have almost zero backlash, high accuracy and good turning properties. These special needle-rollers without cage can take high loads even at large operating angles. A special grinding process realizes a perfect parallelism of the axes and the single parts of the joints - which guarantees an extremely long service life.

Single, Precision Universal Joints WEN with Needle-Roller Bearings, DIN 808

Material: Steel 35SMnPb10, Bearing Parts 18NiCrMo5Pb.
Max. Operating Angle 45°.

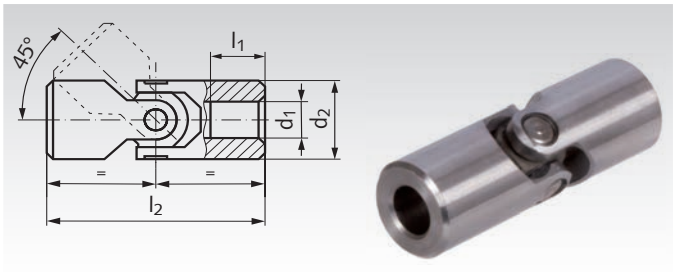

Ordering Details: e.g.: Product No. 631 116 00, Precision, Universal Joint WEN, 8 mm Bore

Product No.	d_1^{H7} mm	d_2 mm	l_1 mm	l_2 mm	permissible max. Torques in Nm at different Speeds 250 min^{-1}	500 min^{-1}	1000 min^{-1}	2000 min^{-1}	3000 min^{-1}	4000 min^{-1}	Weight kg
631 116 00	8	16	15	52	5,8	5,8	5,8	5,8	-	-	0,05
631 122 00	10	20	18	62	22	17	14	11	10	9	0,10
631 126 00	14	25	20	74	34	29	24	22	20	18	0,18
631 132 00	16	32	24	86	65	55	45	40	37	32	0,33
631 137 00	18	37	17	72	75	61	50	45	40	36	0,40
631 140 00	20	40	30	108	140	120	100	80	70	65	0,71
631 150 00	25	50	38	132	200	170	130	110	90	85	1,33
631 163 00	30	63	45	166	300	270	230	190	160	140	2,78
631 170 00	35	70	35	140	326	277	237	198	168	-	2,75
631 180 00	40	80	50	180	365	303	255	205	186	-	4,93

Double, Precision Universal Joints WDN with Needle-Roller Bearings, DIN 808

Material: Steel 35SMnPb10, Bearing Parts 18NiCrMo5Pb.
Max. Operating Angle 90°.

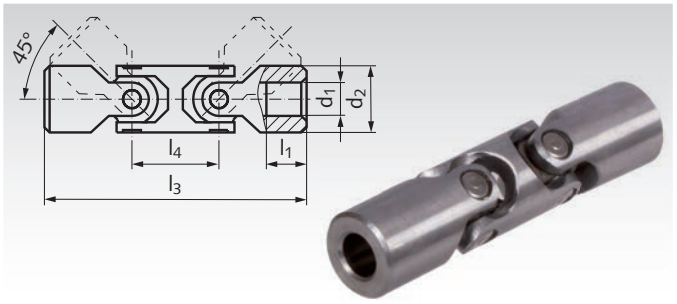

Ordering Details: e.g.: Product No. 631 620 00, Precision Universal Joint WDN, 10 mm Bore

Product No.	d_1^{H7} mm	d_2 mm	l_1 mm	l_3 mm	l_4 mm	Permissible Max. Torques in Nm at different Speeds 250 min^{-1}	500 min^{-1}	1000 min^{-1}	2000 min^{-1}	3000 min^{-1}	4000 min^{-1}	Weight kg
631 620 00	10	20	18	88	26	19,8	15,3	12,6	9,9	9	8	0,14
631 626 00	14	25	20	104	33	30	26	21	19	18	16	0,24
631 632 00	16	32	24	125	38	58	49	40	35	33	28	0,52
631 640 00	20	40	30	156	48	125	108	90	70	63	58	1,01
631 650 00	25	50	38	188	56	180	150	117	95	80	75	1,63
631 663 00	30	63	42	238	80	270	240	207	170	140	125	3,90
631 670 00	35	70	30	212	78	293	249	213	178	151	-	4,08
631 680 00	40	80	48	290	120	328	273	230	185	167	-	7,96



Reworking within 24h-service possible. Custom made parts on request.

Precision Universal Joints Similar to DIN 808 Stainless Steel 1.4301 (X5CrNi1810)

These single and double universal joints feature a simple design with very small tolerances and high precision and performance. These universal joints can be used at speeds up to max. 800 min^{-1}. The torques of the stainless precision universal joints amount less of the standard steel version.

At an operating angle of 45° only manual operation is possible.

Single Precision Universal Joints WER Similar to DIN 808, Stainless

Material: Stainless steel 1.4301.

Max. Operating Angle 45°.

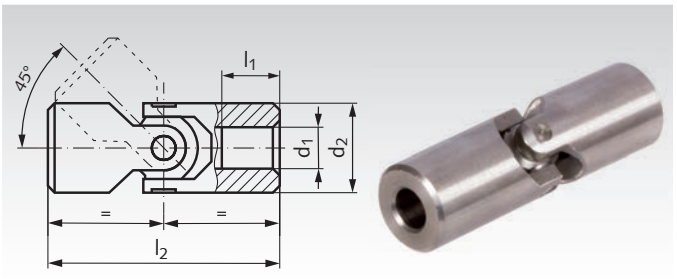

Ordering Details: e.g.: Product No. 631 992 15, Universal Joint WER, 6 mm Bore

Product No.	d_1^{H7} mm	d_2 mm	l_1 mm	l_2 mm	Permissible Max. Torques in Nm at different Speeds 100 min^{-1}	200 min^{-1}	300 min^{-1}	400 min^{-1}	500 min^{-1}	700 min^{-1}	800 min^{-1}	Weight kg
631 992 15	6	13	18	50	3,5	3,3	3	2,8	2,5	-	-	0,04
631 992 16	8	16	19	58	7	5	4,8	4	3,5	3	2,7	0,06
631 992 20	10	22	25	76	12,5	8,5	7,3	6,5	6	5,5	3,8	0,13
631 992 26	12	25	29	86	21,5	12,5	10,3	8,5	7,8	6,5	6,0	0,23
631 992 29	14	29	30	90	34,3	21,5	19,8	18	16,8	14,3	13,3	0,33
631 992 32	16	32	30	95	43,3	42	36	28,8	25,8	20,5	18	0,42
631 992 37	18	37	35	108	78	60	48	36	30	29	-	0,65
631 992 40	20	40	32	108	120	84	60	48	42	30	-	0,75
631 992 47	22	47	38	127	150	96	72	60	48	36	-	1,26
631 992 50	25	50	44	140	192	120	84	72	60	48	-	1,52
631 992 57	30	58	58	178	216	132	96	78	66	-	-	2,60

Double Precision Universal Joints WDR Similar to DIN 808, Stainless

Material: Stainless steel 1.4301.

Max. Operating Angle 90°.

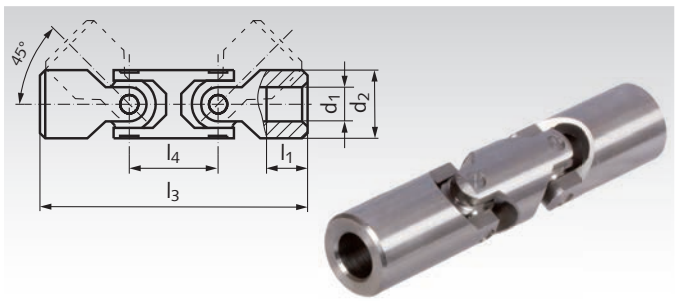

Ordering Details: e.g.: Product No. 631 997 26, Universal Joint WDR, 12 mm Bore

Product No.	d_1^{H7} mm	d_2 mm	l_1 mm	l_3 mm	l_4 mm	Permissible Max. Torques in Nm at different Speeds 100 min^{-1}	200 min^{-1}	300 min^{-1}	400 min^{-1}	500 min^{-1}	700 min^{-1}	800 min^{-1}	Weight kg
631 997 26	12	22	25	105	29	11,3	7,7	6,5	5,9	5,4	5,0	3,4	0,20
631 997 29	14	25	29	119	33	19,4	11,3	9,2	7,7	7	5,9	5,4	0,30
631 997 32	16	29	30	125	35	30,8	19,4	17,8	16,2	15,1	12,8	11,9	0,43
631 997 37	18	32	30	134	39	38,9	37,8	32,4	25,9	23,2	18,5	16,2	0,56
631 997 40	20	40	32	154	46	70	54	43	32	27	26	-	1,06
631 997 47	22	40	38	176	46	108	76	54	43	38	27	-	1,16
631 997 50	25	50	44	199	59	173	108	76	65	54	43	-	2,16
631 997 57	30	58	58	244	66	194	119	86	70	59	-	-	3,48

Bellows

page 415





Reworking within 24h-service possible. Custom made parts on request.

Cardan Joints KE According to the Old Standard DIN 7551 Similar to DIN 808 with and without Bore

Material: Steel C 45.
Max. Operating Angle 45°.

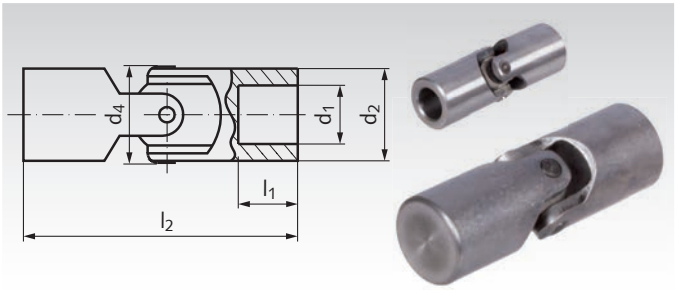

Ordering Details: e.g.: Product No. 630 110 00, Cardan Joint KE, 6 mm Bore

Product No. with Bore d_1	Product No. Without Bore	d_1^{H7} mm	d_2 mm	d_4 mm	l_1 mm	l_2 mm	Torque max. Nm	Weight with Bore kg	Weight without Bore kg
630 110 00	**630 010 00**	6	10	10,5	12	40	2	0,014	0,020
630 113 00	**630 013 00**	8	13	14	12	42	6	0,024	0,035
630 116 00	**630 016 00**	10	16	17,5	15	52	8	0,047	0,067
630 120 00	**630 020 00**	12	20	21,5	18	62	20	0,089	0,138
630 125 00	**630 025 00**	16	25	26,5	22	74	30	0,160	0,230
630 132 00	**630 032 00**	20	32	33,5	25	86	60	0,310	0,440
630 140 00	**630 040 00**	25	40	42	32	108	160	0,625	0,880
630 150 00	**630 050 00**	32	50	52,5	40	132	290	1,200	1,710
630 163 00	**630 063 00**	40	63	64	50	166	550	2,400	3,070

The cardan joints KE are, other than the cardan joints with needle-roller bearing, only sliding-contact bearings. Their scope of application is therefore limited to slow running drives. The respective maximum speeds depend on operating angle and load, but must never exceed 1000 min^{-1}. The maximum torque values listed in the table are limits, which must neither be exceeded.They may only be used to their full extend with intermittent operation or at low speed.

The following limit applies:
The product of speed (min^{-1}) x working angle (degrees) may not exceed the reference number 500. This means, e.g., for a working angle of 10 degrees a max. speed of 50 min^{-1}. If, however, the maximum torque is not taken to the limit, speed and working angle can be larger. At 0.5 x max. torque applies: speed x working angle, smaller or equal 4.000. In case of doubt choose larger joint.

At continuous operation the cardan joints need to be sufficiently lubricated. If no drip-feed lubrication is possible (drip-feed lubricators see page 582), lubricate the joints at least once a day. Another possibility is to cover the joints with a bellow, filled with a suitable lubricant.

Ball Joints RW

Material: Steel 11SMnPb30K.

Max. Operating Angle 35°.

Temperature range: -70°C to +160°C.

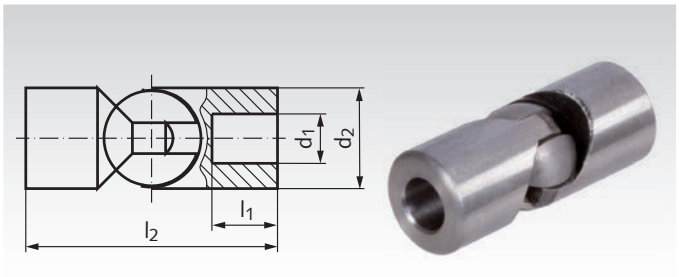

Ordering Details: e.g.: Product No. 631 313 00, Ball Joint RW, 6 mm Bore

Product No.	d_1^{H7} mm	d_2 mm	l_1 mm	l_2 mm	Torque max. Nm	Weight kg
631 313 00	6	13	10	35	6	0,03
631 316 00	8	16	10	40	8	0,05
631 320 00	10	20	13	50	20	0,09
631 324 00	12	24	14	60	30	0,14
631 328 00	14	28	17	70	50	0,24
631 332 00	16	32	19	80	60	0,36
631 336 00	18	36	22	90	120	0,52
631 340 00	20	40	24	100	160	0,71
631 345 00	22	45	26	110	200	1,10
631 350 00	25	50	30	125	290	1,30
631 355 00	30	55	35	135	440	1,70
631 360 00	35	60	42	165	520	2,20
631 365 00	40	65	46	190	700	3,00
631 370 00	45	70	52	210	820	4,30

Bellows

page 415



The ball joints RW are simple, sliding-contact bearing elements and can only be used at low speeds. The respective maximum speeds depend on operating angle and load, but should possibly not exceed 500 min^{-1}. The maximum torque values listed in the table are limits, which must also never be exceeded. They may only be used to their full extend with intermittent operation or at low speed and small operating angle. Can be used from -70° to +160°C.

The following limit applies:
The product of speed (min^{-1}) x working angle (degrees) must not exceed the reference number 500. This means, e.g., for a working angle of 10 degrees a max. speed of 50 min^{-1}. If however the maximum torque is not used to the limit, speed and working angle can be larger. At 0.5 x max. torque applies: speed x working angle, smaller or equal 4.000. In case of doubt choose larger joint. Lubrication see cardan joints KE page 412.

Slip shafts LW with ball joints

Material: Steel 11SMnPb30K.

Max. operating angle per joint 35°.

With ball joints RW for power transmission in applications where longitudinal displacement occurs. The variation in length is effected with a multiple-spline shaft. Torques as for ball joints RW.

Other lengths on request.

Temperature range: -70°C to +160°C.

Ordering Details: e.g.: Product No. 631 520 00, Ball-Joint Shaft LW, 10 mm Bore

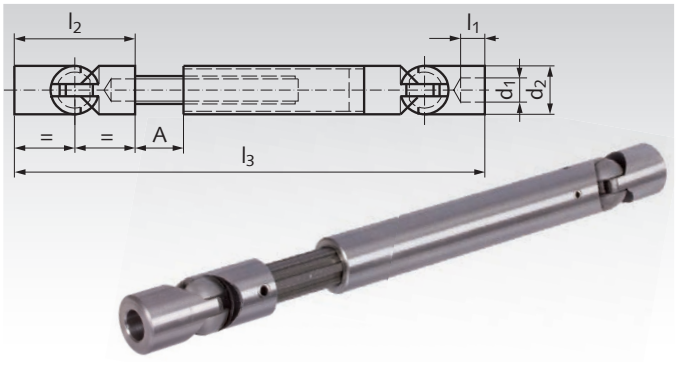

Product No.	d_1^{H7} mm	d_2 mm	l_1 mm	l_2 mm	l_3 mm	A mm	Torque max. Nm	Profile similar DIN ISO 14 mm x mm	Weight kg
631 520 00	10	20	13	50	200	70	20	11 x 14	0,50
631 524 00	12	24	14	60	220	75	30	11 x 14	0,65
631 528 00	14	28	17	70	250	80	50	16 x 20	0,95
631 532 00	16	32	19	80	280	90	60	16 x 20	1,38
631 536 00	18	36	22	90	300	85	120	18 x 22	1,90
631 540 00	20	40	24	100	350	110	160	21 x 25	2,75
631 545 00	22	45	26	110	400	140	200	21 x 25	4,00
631 550 00	25	50	30	125	400	100	290	28 x 32	4,80
631 555 00	30	55	35	135	450	100	440	28 x 32	6,70
631 560 00	35	60	42	165	500	100	520	36 x 42	8,90
631 565 00	40	65	46	190	550	100	700	36 x 42	11,40
631 570 00	45	70	52	210	630	120	820	44 x 52	15,50
631 580 00	50	80	58	230	700	140	930	50 x 58	18,00

Slip shafts with joints PW

Material: Steel 35SMnPb10, Bearing Parts 18NiCrMo5Pb, Splined shaft C45 cold drawn.

Max. Operating Angle per Joint 45°.

Other lengths on request.

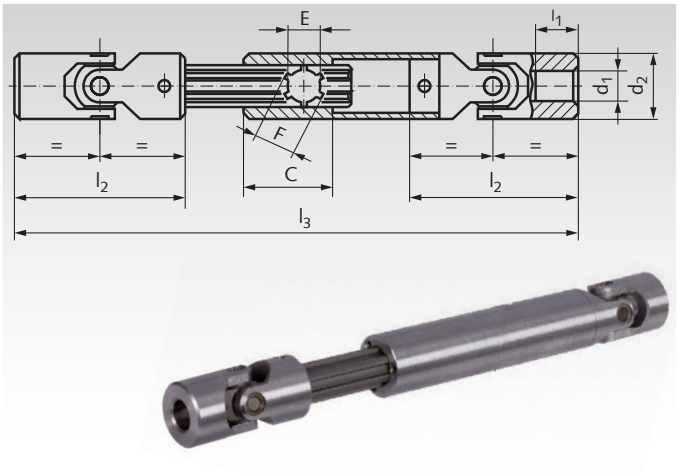

Ordering Details: e.g.: Product No. 631 820 00, slip shaft PW, 10 mm Bore

Product No.	d_1^{H7} mm	d_2 mm	l_1 mm	l_2 mm	$l_{3\ min.}$ mm	$l_{3\ max.}$ mm	C mm	E mm	F mm	permissible max. Torques in Nm at different Speeds 100 min^{-1}	200 min^{-1}	300 min^{-1}	400 min^{-1}	500 min^{-1}	700 min^{-1}	800 min^{-1}	Weight kg
631 820 00	10	22	10	45	170	230	40	11	14	25	17	14,5	13	12	11	7,5	0,37
631 826 00	12	25	11	50	200	270	45	13	16	43	25	20,5	17	15,5	13	12	0,58
631 829 00	14	29	13	56	210	280	45	13	16	68,5	43	39,5	36	33,5	28,5	26,5	0,85
631 832 00	16	32	15	65	250	350	45	16	20	86,5	84	72	57,5	51,5	41	36	1,15
631 837 00	18	37	17	72	270	370	45	16	20	156	120	96	72	60	48	-	1,56
631 840 00	20	40	19	82	290	380	45	18	22	240	168	120	96	84	60	-	2,08
631 847 00	22	47	22	95	330	430	48	21	25	300	192	144	120	96	72	-	3,33
631 850 00	25	50	26	108	350	450	48	23	28	384	240	168	144	120	96	-	3,79
631 858 00	30	58	30	122	400	510	50	26	32	432	264	192	156	132	-	-	5,59

Slip shafts with joints with needle-roller bearings PWN

Material: Steel 35SMnPb10

Max. Operating Angle per Joint 45°.

Other lengths on request.

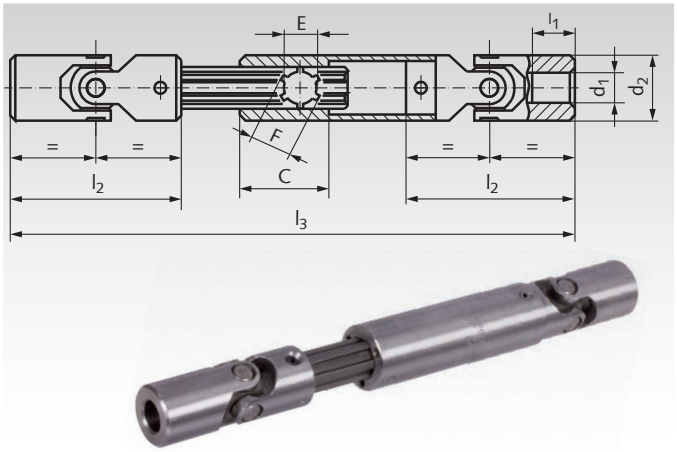

Ordering Details: e.g.: Product No. 631 920 00, slip shaft PWN, 10 mm Bore

Product No.	d_1^{H7} mm	d_2 mm	l_1 mm	l_2 mm	$l_{3\ min.}$ mm	$l_{3\ max.}$ mm	C mm	E mm	F mm	Permissible Max. Torques in Nm at different Speeds 250 min^{-1}	500 min^{-1}	1000 min^{-1}	2000 min^{-1}	3000 min^{-1}	4000 min^{-1}	Weight kg
631 920 00	10	20	18	62	170	200	40	11	14	20	15	13	10	9	8	0,33
631 925 00	14	25	20	74	220	270	45	13	16	31	26	22	20	18	16	0,58
631 932 00	16	32	24	86	250	320	45	16	20	59	50	41	36	33	29	1,15
631 937 00	18	37	17	72	270	370	45	16	20	68	55	45	41	36	32	1,56
631 940 00	20	40	30	108	290	360	45	18	22	126	108	90	72	63	59	2,08
631 947 00	22	47	22	95	330	430	48	21	25	146	119	97	79	69	64	3,33
631 950 00	25	50	38	132	350	435	48	23	28	180	153	117	99	81	77	3,79
631 963 00	30	63	45	166	400	490	50	32	38	270	243	207	171	144	126	6,00
631 970 00	35	70	35	140	500	600	70	32	38	293	249	213	178	151	-	10,00



Reworking within 24h-service possible. Custom made parts on request.

Slip shafts with joints PWR

Material: Stainless steel 1.4301.
Max. operating angle per joint 45°.
Other lengths on request.

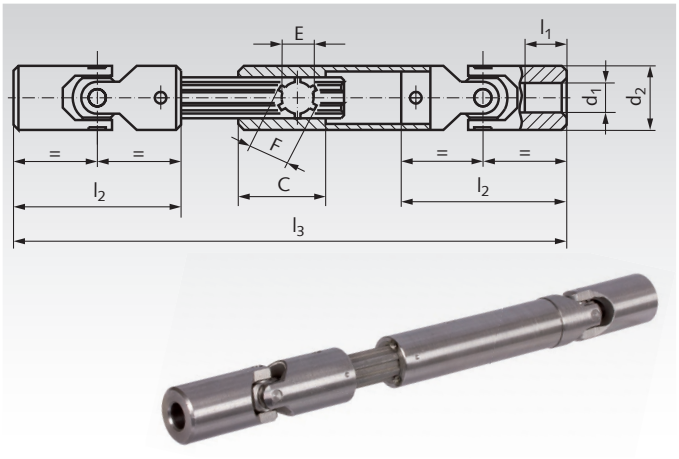

Ordering Details: e.g.: Product No. 631 998 20, Slip shaft with joints PWR, bore 10 mm

Product No.	d_1 H7 mm	d_2 mm	l_1 mm	l_2 mm	$l_{3\ min.}$ mm	$l_{3\ max.}$ mm	C mm	E mm	F mm	permissible max. Torques in Nm at different Speeds 100 min^{-1}	200 min^{-1}	300 min^{-1}	400 min^{-1}	500 min^{-1}	700 min^{-1}	800 min^{-1}	Weight kg
631 998 20	10	22	25	76	215	245	30	11	14	12,5	8,5	7	6,5	6	5,5	3,5	0,99
631 998 26	12	25	29	86	240	270	35	13	16	21,5	12,5	10	8,5	7,5	6,5	6	0,76
631 998 29	14	29	30	90	250	280	35	13	16	34	21,5	19,5	18	16,5	14	13	0,92
631 998 32	16	32	30	95	280	330	35	16	20	43	42	36	29	25,5	20,5	18	1,35
631 998 37	18	37	35	108	305	355	35	16	20	78	60	48	36	30	24	-	1,79
631 998 40	20	40	32	108	315	365	48	23	28	120	84	60	48	42	30	-	2,41
631 998 47	22	47	38	127	355	405	48	23	28	150	96	72	60	48	36	-	3,75
631 998 50	25	50	44	140	380	430	48	23	28	192	120	84	72	60	48	-	4,33

Bellows FSG (black) for Single-Universal Joints

Material: NBR, black. Hardness about 45 Shore A.
Mineral-oil resistant.

Single-fold bellows are used to protect ball and universal joints.

The shaft lengths l_1 and l_2 are estimated dimensions.

To securely fix the bellows on the joints, the connections should be fixed with hose fittings.

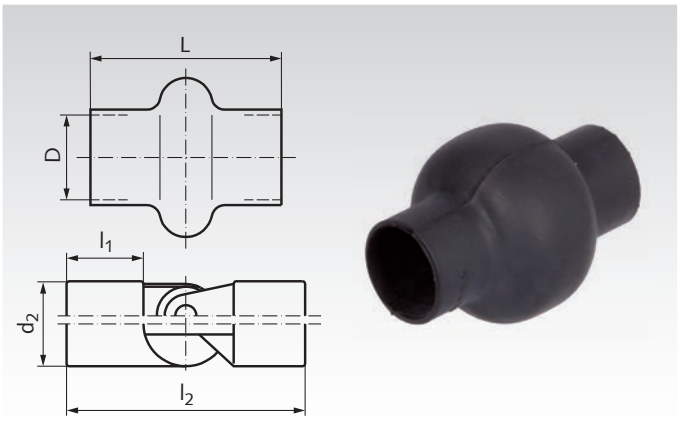

Ordering Details: e.g.: Product No. 630 516 00, Bellows FSG, inside diameter 16 mm

Product No.	Inside-Ø D mm	d_2 mm	L mm	l_1 mm	l_2 mm	Weight g
630 516 00	16	16	32	9	34	5
630 518 00	18	18	38	11	40	6
630 520 00	20	20	56	14	50	8
630 522 00	22	22	40	13	48	7
630 525 00	25	25	66	22	74	12
630 526 00	26	26	45	15	56	10
630 528 00	28	28	58	20	70	9
630 529 00	29	29	50	17	60	12
630 532 00	32	32	60	19	68	15
630 533 00	32	32	75	23	80	18
630 536 00	36	36	82	26	90	22
630 540 00	42	40	75	29	100	24
630 545 00	47	45	90	31	110	31
630 550 00	52	50	95	36	125	40
630 555 00	58	55	95	45	120	48
630 570 00	70	70	96	56	140	67



Reworking within 24h-service possible. Custom made parts on request.

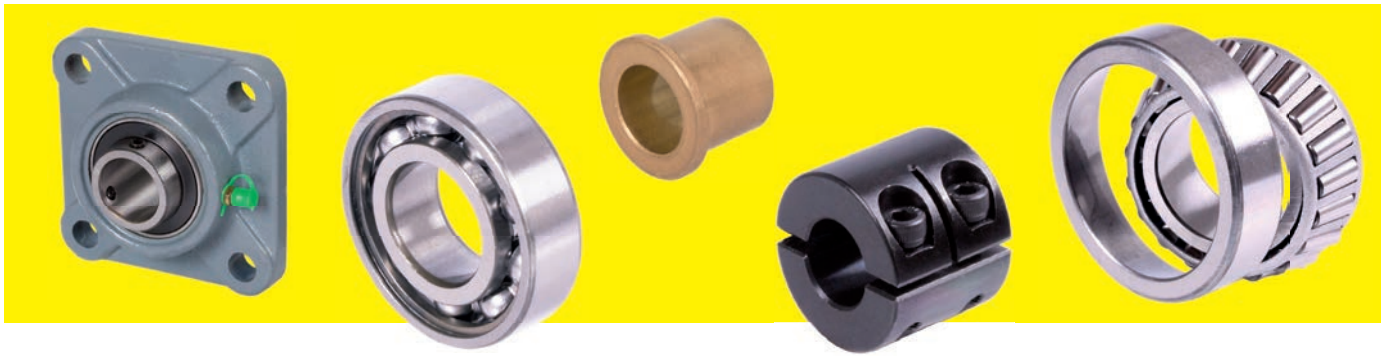

Bearing units


Thermoplastic Pillow Block Bearings igubal® KSTM
Page 418


Thermoplastic Pillow Block Bearings igubal® ESTM
Page 418


Thermoplastic Flange Bearings igubal® EFSM
Page 419


Thermoplastic Flange Bearings igubal® EFOM
Page 419


Light Duty Pillow Block Bearing HM with Bores for Drive-In Oiler
Page 420


Cap Bearing Version L, with Red Brass Bushes for Compression Lubricators (Type Stauffer)
Page 420


Heavy-Duty Pillow Block Bearings
Version A, with Red Brass Bushes for Compression Lubricators (Type Stauffer)
Page 421


Heavy-Duty Pillow Block Bearings
Version B, without Bushes, for Compression Lubricators (Type Stauffer)
Page 421


Flange Bearings Version A, with Red Brass Bushes for Compression Lubricators (Type Stauffer)
Page 422


Flange Bearings Version B, without Bushes, for Compression Lubricators (Type Stauffer)
Page 422


Flange Bearings Version B, with Red Brass Bushes for Compression Lubricators (Type Stauffer)
Page 422


Ball Pillow Block Bearings TUCP (Plastic / Stainless Steel)
Page 424


Protection Caps for Thermoplastic Pillow Bearings (Plastic)
Page 424


Ball Flange Bearings TUCF (Plastic / Stainless Steel)
Page 425


Ball Flange Bearings TUCFL (Plastic / Stainless Steel)
Page 425


Ball Pillow Block Bearings UCP (Grey Cast Iron)
Page 426


Ball Pillow Block Bearings BBP (Two-Part Steel Sheet, Zinc Plated)
Page 426


Ball Flange Bearings UCF (Grey Cast Iron)
Page 427


Ball Flange Bearings UCFL (Grey Cast Iron)
Page 427


Ball Flange Bearings UCFA (Grey Cast Iron)
Page 428


Ball Flange Bearings BPF (Two-Part Steel Sheet, Zinc Plated)
Page 428

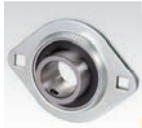
Ball Flange Bearings BPFL (Two-Part Steel Sheet, Zinc Plated)
Page 428


Ball Pillow Block Bearings SSUCP (Stainless Steel)
Page 429


Ball Pillow Block Bearings SSBPP (Stainless Steel)
Page 429


Ball Flange Bearings SSUCF (Stainless Steel)
Page 430


Ball Flange Bearings SSUCFL (Stainless Steel)
Page 430


Ball Flange Bearings SSBPF (Stainless Steel)
Page 431


Ball Flange Bearings SSBPFL (Stainless Steel)
Page 431


Pillow Block Bearing Units BK, for Fixed Side
Page 432


Pillow Block Bearing Units BF, for Support Side
Page 432


Pillow Block Bearing Units EK, for Fixed Side
Page 433


Pillow Block Bearing Units EF, for Support Side
Page 433


Flange Bearing Units FK, for Fixed Side
Page 434


Flange Bearing Units FF, for Support Side
Page 434

Roller Bearings



Single Row Ball Bearings from SKF®

Page 436



Single Row Ball Bearings 2Z with Shields, from SKF®

Page 436



Single Row Ball Bearings 2RS with Seals, from SKF®

Page 436



Single Row Ball Bearings ZZ with Shields, from MÄDLER®

Page 438



Single Row Ball Bearings 2RS with Seals, from MÄDLER®

Page 438



Angular Contact Ball Bearings from SKF®

Page 440



Self aligning Ball Bearings from SKF®

Page 440



Cylindrical Roller Bearings from SKF®

Page 441



Spherical Roller Bearings from SKF®

Page 441



Tapered Roller Bearings from SKF®

Page 442



Radial Shaft Seals Design A

Page 443

Sintered Bronze Bushes



Bushes Version J Similar to DIN 1850 (DIN 4379 Version C) Made From Sintered Bronze For Plain Bearings

Page 445



Flange Bushes Version V Similar to DIN 1850 (DIN 4379 Version F) Made From Sintered Bronze For Plain Bearings

Page 446

Sintered Bronze Raw Material



Raw Material Made From Sintered Bronze with Bore for Plain Bearing Production

Page 446



Raw Material Made From Sintered Bronze without Bore for Plain Bearing Production

Page 446

Slotted Bushes



Cylindrical Bushes, Slotted (without any lubrication)

Page 447



Flange Bushes, Slotted (without any lubrication)

Page 447

Plastic Bushes



Bushes BP made from Polyamide 6.6 Die Cast for Plain Bearings -40°C to +80°C

Page 448



Bushes BBP made from Polyamide 6.6 Die Cast for Plain Bearings, -40°C to +80°C

Page 448



Cylindrical Bushes, plastic EP22™ -50°C to +170°C

Page 449



Flange Bushes, plastic EP22™, -50°C to +170°C

Page 449



Cylindrical Bushes, plastic EP43™, -40°C to +240°C

Page 450



Flange Bushes, plastic EP43™, -40°C to +240°C

Page 450

Drill Bushes



Cylindrical Drill Bushes DIN 179 Version A

Page 451



Cylindrical Flanged Drill Bushes DIN 172 Version A

Page 451

Adjusting Rings / Set Collars, Clamp collars / Shaft Collars



Adjusting Rings made from Steel, Steel Zinc-plated and Stainless Steel

Page 452



Clamp Collars, Slottet and 2-Part, from Steel burnished, Stainless Steel and Aluminium

Page 454



Clamp Collars, Double Wide, Slottet and 2-Part from Steel burnished and Stainless Steel

Page 456



Clamp Collars Slotted, with Thread, from Steel burnished and Stainless Steel

Page 457

Thermoplastic Pillow Block Bearings igubal® KSTM, connection measures like DIN 12240-4 (DIN 648) series K

Material spherical ball: iglidur® W300, yellowish.
Material housing: igumid G, black.

- Maintenance-free, silent running and anti-vibrating.
- High strength at very low weight.
- Resistant against corrosion and many chemicals.
- Electrical and thermal isolating.
- The shaft must rotate inside the bore of the spherical ball. With a metal shaft, a sliding speed up to 30 m/min. may be possible. The spherical ball may only compensate shaft misalignement.

Temperature range: -30° to +80°C.

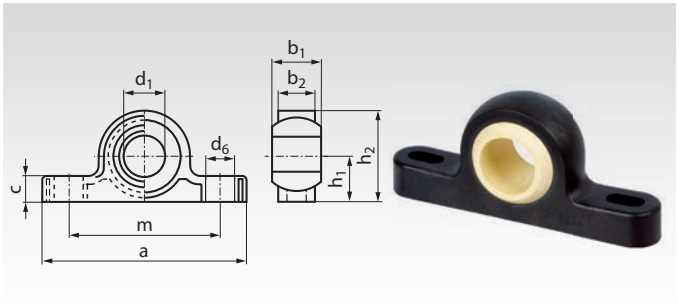

Ordering Details: e.g.: Product No. 620 550 05, Pillow Block igubal KSTM, 5mm

Product No. KSTM	d_1^{E10} mm	h_1 mm	h_2 mm	b_1 mm	b_2 mm	a mm	m mm	c mm	d_6 mm	Load Rating radial* static N	Load Rating axial static N	Tilting angle α °	Weight g
620 550 05	5	7	14	8	6	34	26,3	4,0	3,3 x 4,6	350	300	30	1,7
620 550 06	6	10	18	9	7	43	34,5	5,5	4,5 x 6,0	550	300	29	2,9
620 550 08	8	10	20	12	9	47	35,5	6,0	4,5 x 7,0	650	400	25	4,6
620 550 10	10	14	26	14	10,5	62	48,5	7,5	5,5 x 8,0	750	500	25	8,6
620 550 12	12	14	28	16	12	65	49,5	8,5	5,5 x 9,0	1100	600	25	11,8
620 550 16	16	18	36	21	15	86	65,4	10,5	6,6 x 12	1500	1000	23	23,7
620 550 20	20	22	44	25	18	98	73	13	9,0 x 14	2350	1300	23	40,0
620 550 25	25	27	54	31	22	124	94	16	9,0 x 17	3300	1600	22	75,3
620 550 30	30	32	64	37	25	139	105	17	11 x 20	4050	2100	22	116,8

* At short term, the radial load may be twice as high.

Other versions or sizes on request.

Thermoplastic Pillow Block Bearings igubal® ESTM, connection measures like DIN 12240-4 (DIN 648) series E

Material spherical ball: iglidur® W300, yellowish.
Material housing: igumid G, black.

- Maintenance-free, silent running and anti-vibrating.
- High strength at very low weight.
- Resistant against corrosion and many chemicals.
- Electrical and thermal isolating.
- The shaft must rotate inside the bore of the spherical ball. With a metal shaft, a sliding speed up to 30 m/min. may be possible. The spherical ball may only compensate shaft misalignement.

Temperature range: -30° to +80°C.

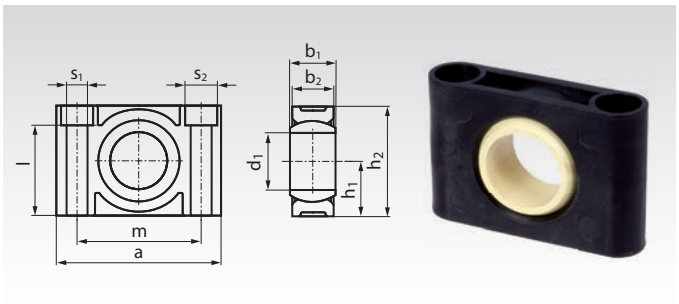

Ordering Details: e.g.: Product No. 620 551 08, Pillow Block igubal ESTM, 8mm

Product No. ESTM	d_1^{E10} mm	h_1 mm	h_2 mm	b_1 mm	b_2 mm	a mm	m mm	s_1 mm	s_2 mm	l mm	Load rating* radial push static N	Load rating* radial pull static N	Load rating* axial static N	Tilting angle α °	Weight g
620 551 08	8	9,5	19	8	9	31	22	4,5	-	-	2150	1250	300	22	5,0
620 551 10	10	11	22	9	10	36	26	5,5	-	-	2650	1700	350	22	7,1
620 551 12	12	13	26	10	10	38	28	5,5	-	-	3250	2250	375	22	9,0
620 551 16	16	17	34	13	13	50	37	6,6	10,6	27,6	4250	3350	550	22	17,5
620 551 20	20	20	40	16	16	62	46	9	14	31,4	5750	4250	700	22	27,4
620 551 25	25	24	48	20	18	72	54	9	14	39,4	9250	6750	1150	20	50,8
620 551 30	30	28	56	22	22	86	64	11	17	45,4	8250	5000	1250	20	79,7

* At short term, the load may be twice as high.

Other versions or sizes on request.

Thermoplastic Flange Bearings igubal® EFSM, with 4 Mounting Holes

Material spherical ball: iglidur® W300, yellowish.
Material housing: igumid G, black.

- Maintenance-free, silent running and anti-vibrating.
- High strength at very low weight.
- Resistant against corrosion and many chemicals.
- Electrical and thermal isolating.
- The shaft must rotate inside the bore of the spherical ball. With a metal shaft, a sliding speed up to 30 m/min. may be possible. The spherical ball may only compensate shaft misalignement.

Temperature range: -30° to +80°C.

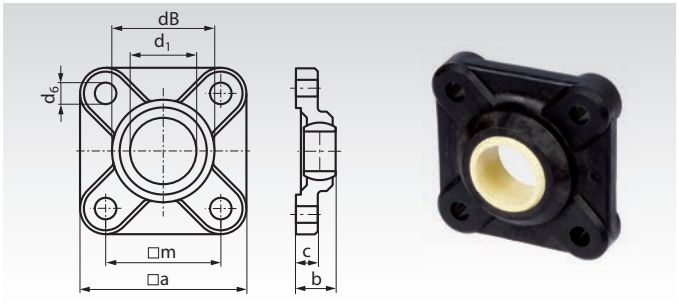

Ordering Details: e.g.: Product No. 621 550 04, Flange Bearing igubal EFSM, 4mm

Product No. EFSM	d_1^{E10} mm	b mm	dB mm	a mm	$m^{\pm 0,1}$ mm	$c^{\pm 0,1}$ mm	d_6 mm	Load Rating* radial static N	Load Rating* axial static N	Tilting angle α °	Weight g
621 550 04	4	8,5	14	25	17	4,5	3,2	500	100	28	2,6
621 550 05	5	8,5	14	25	17	4,5	3,2	500	150	29	2,7
621 550 06	6	8,5	14	25	17	4,5	3,2	500	150	25	2,8
621 550 08	8	10,5	18	33	22	5,5	4,3	700	225	25	5,9
621 550 10	10	12	21,9	38	26	6,5	5,3	1000	350	25	9,1
621 550 12	12	13	25	40	28	7	5,3	1250	425	21	11
621 550 15	15	15,5	30	49	34	8,5	6,4	1500	550	20	20,2
621 550 16	16	16,5	32	52	36	9	6,4	1600	675	27	23,3
621 550 17	17	18	35	54	38	10	6,4	1700	800	21	27,9
621 550 20	20	20	40	65	45	11	8,4	2000	1000	19	45
621 550 25	25	25	48,5	74	52	14	8,4	2800	1200	15	76
621 550 30	30	26	54,5	85	60	15	10,5	3000	1400	14	101

* At short term, the load may be twice as high.

Other versions or sizes on request.

Thermoplastic Flange Bearings igubal® EFOM, with 2 Mounting Holes

Material spherical ball: iglidur® W300, yellowish.
Material housing: igumid G, black.

- Maintenance-free, silent running and anti-vibrating.
- High strength at very low weight.
- Resistant against corrosion and many chemicals.
- Electrical and thermal isolating.
- The shaft must rotate inside the bore of the spherical ball. With a metal shaft, a sliding speed up to 30 m/min. may be possible. The spherical ball may only compensate shaft misalignement.

Temperature range: -30° to +80°C.

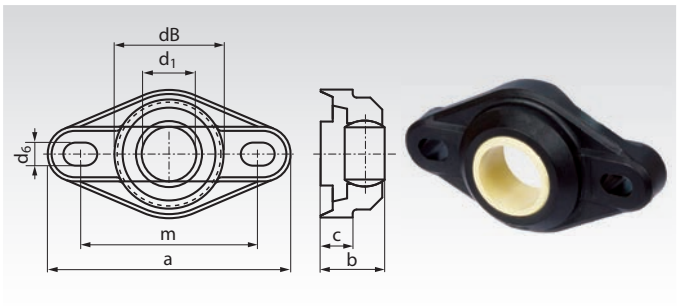

Ordering Details: e.g.: Product No. 621 551 04, Flange Bearing igubal EFOM, 8mm

Product No. EFOM	d_1^{E10} mm	b mm	dB mm	a mm	h mm	$m^{\pm 0,1}$ mm	c mm	d_6 mm	Load Rating* radial static N	Load Rating* axial static N	Tilting angle α °	Weight g
621 551 04	4	8	14	33,8	16	24	4,5	3,2 x 5,0	375	200	28	1,9
621 551 05	5	8,5	14	33,8	16	24	4,5	3,2 x 5,0	375	200	29	2,3
621 551 06	6	8,5	14	33,8	16	24	4,5	3,2 x 5,0	400	250	25	1,8
621 551 08	8	10,5	18	44,2	22	31	5,5	4,3 x 6,5	550	350	25	4,1
621 551 10	10	12	22,2	52	26	36	6,5	5,3 x 8,0	1000	425	25	6,8
621 551 12	12	13	25	56,7	31	41	7	5,3 x 8,0	1100	550	21	8,9
621 551 15	15	15,5	29,8	68,6	36	50	8,5	6,4 x 10,0	1200	650	20	15,0
621 551 16	16	17,5	32	72,6	38	53	10	6,4 x 10,1	1400	700	27	17,7
621 551 17	17	18	34,8	74,6	41	55	10	6,4 x 10,2	1600	900	21	24,9
621 551 20	20	20	40	89	47	65	11	8,4 x 12,5	2750	900	19	32,8
621 551 25	25	25	48,5	101	58,5	75	14	8,4 x 12,6	3000	1500	15	58,5
621 551 30	30	26	55	118	65	87,5	15	10,5 x 16,0	3250	1750	14	78,9

* At short term, the load may be twice as high.

Other versions or sizes on request.

Light-Duty Pillow Block Bearings HM

Material: Grey Cast Iron.
Bore tolerance: ISO D9.
With Bores for Drive-In Oiler

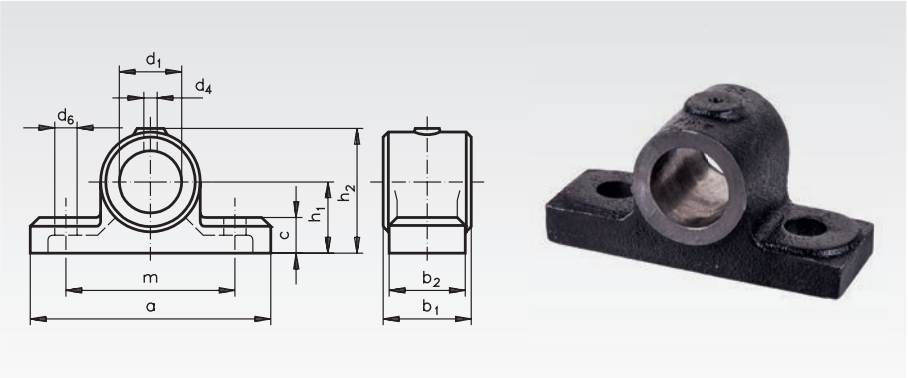

Ordering Details: e.g.: Product No. 620 015 00, Pillow Block Bearing HM, 15 mm Bore

Product No.	d_1 mm	h_1* mm	h_2* mm	b_1 mm	a mm	b_2* mm	m mm	c mm	d_6* mm	d_4 mm	Weight kg
620 015 00	15	30	51	42	95	35	65	18,5	9x14**	5	0,6
620 020 00	20	30	51	42	95	35	65	18,5	9x14**	5	0,5
620 025 00	25	35	61	50	116	40	74	17,5	13	5	0,66
620 030 00	30	35	61	50	116	40	74	17,5	15	5	0,57
620 035 00	35	43	77	55	130	45	85	24	17	6	1,2
620 040 00	40	48	81	63	145	50	95	24	18	6	1,4

* Approx. dimensions (rough cast surfaces).
** Slot hole.

Cap Bearings DIN 505 Version L, with Red Brass Bush

Material: Grey Cast Iron.
Bush Rg7 (G-CuSn7ZnPb).
Bore Tolerance: ISO D10.
For compression lubricators type Stauffer.

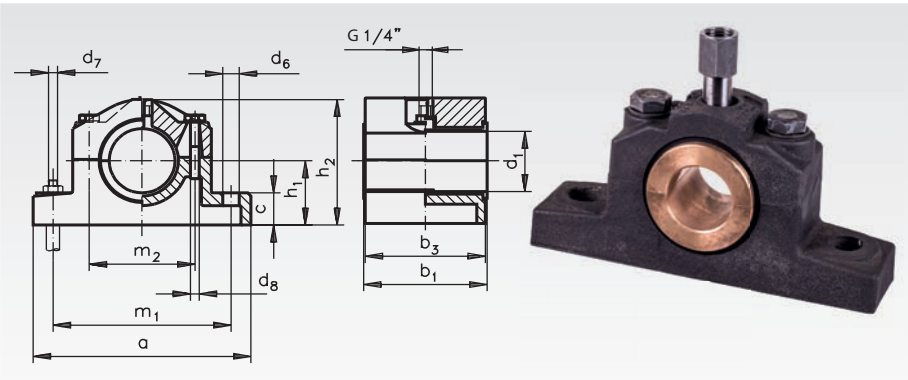

Ordering Details: e.g.: Product No.620 325 00, Cap Bearing DIN 505, 25 mm Bore

Product No.	d_1 mm	h_1 mm	h_2 mm	b_1 mm	a mm	b_3 mm	c mm	d_6 mm	d_7 mm	d_8 mm	m_1 mm	m_2 mm	Weight kg
620 325 00	25	40	78	45	165	40	22	15	M12	M10	125	65	1,6
620 330 00	30	40	78	45	165	40	22	15	M12	M10	125	65	1,6
620 335 00	35	50	95	50	180	45	25	15	M12	M10	140	75	2,25
620 340 00	40	50	95	50	180	45	25	15	M12	M10	140	75	2,25
620 345 00	45	60	114	55	210	50	30	19	M16	M12	160	90	3,25
620 350 00	50	60	114	55	210	50	30	19	M16	M12	160	90	3,25
620 360 00	60	70	132	60	225	55	35	19	M16	M12	175	100	4,35
620 370 00	70	80	154	65	270	60	40	24	M20	M16	210	120	7,1
620 380 00	80	90	170	75	290	70	45	24	M20	M16	230	130	10,2

Compression lubricators page 586.

Heavy-Duty Pillow Block Bearings DIN 504 Design A, with Red Brass Bush

Material: Grey Cast Iron.
Bush Rg7 (G-CuSn7ZnPb).

Bore Tolerance: ISO D10.

For compression lubricators type Stauffer.

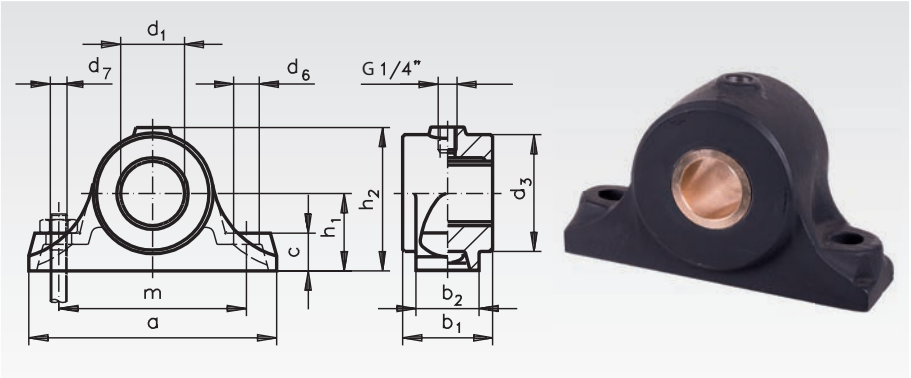

Ordering Details: e.g.: Product No. 620 130 00, Pillow Block Bearing DIN 504 A, 30 mm Bore

Product No.	d_1 mm	h_1 mm	$h_{2\ max.}$ mm	b_1 mm	d_3 mm	a mm	b_2 mm	c mm	m mm	d_6 mm	d_7 mm	Weight kg
620 130 00	30	50	95	60	80	160	45	25	120	15	M12	3,0
620 140 00	40	60	110	70	90	190	50	30	140	19	M16	4,2
620 150 00	50	70	125	80	100	220	55	35	160	24	M20	5,5
620 160 00	60	80	145	90	120	240	60	35	180	24	M20	8,3
620 170 00	70	90	165	100	140	270	70	45	210	28	M24	11,6
620 180 00	80	100	185	100	160	300	80	45	240	28	M24	17,0

Heavy-Duty Pillow Block Bearings DIN 504 Design B, without Bush

Material: Grey Cast Iron.

Bore Tolerance: ISO D7.

For compression lubricators type Stauffer.

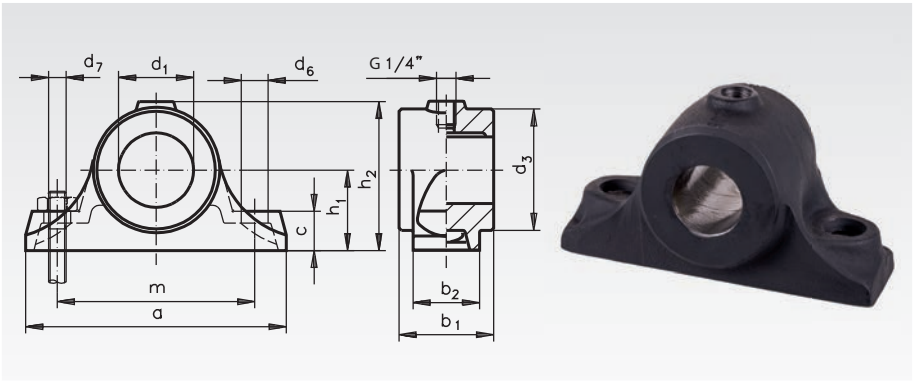

Ordering Details: e.g.: Product No. 620 220 00, Pillow Block Bearing DIN 504 B, 20 mm Bore

Product No.	d_1 mm	h_1 mm	$h_{2\ max.}$ mm	b_1 mm	d_3 mm	a mm	b_2 mm	c mm	m mm	d_6 mm	d_7 mm	Weight kg
620 220 00	20	30	56	50	45	110	35	18	75	12	M10	1,3
620 225 00	25	40	75	60	60	140	40	25	100	15	M12	2,0
620 230 00	30	40	75	60	60	140	40	25	100	15	M12	2,0
620 235 00	35	50	95	60	80	160	45	25	120	15	M12	3,0
620 240 00	40	50	95	60	80	160	45	25	120	15	M12	3,0
620 245 00	45	60	110	70	90	190	50	30	140	19	M16	4,2
620 250 00	50	60	110	70	90	190	50	30	140	19	M16	4,2
620 260 00	60	70	125	80	100	220	55	35	160	24	M20	5,5
620 270 00	70	80	145	90	120	240	60	35	180	24	M20	8,3
620 280 00	80	90	165	100	140	270	70	45	210	28	M24	11,6

Compression lubricators (type Stauffer) page 586.

Flange Bearings DIN 502 Design A, with Red Brass Bush

Material: Grey Cast Iron.
Bush Rg7 (G-CuSn7ZnPb).

Bore Tolerance: ISO D10.

For compression lubricators type Stauffer.

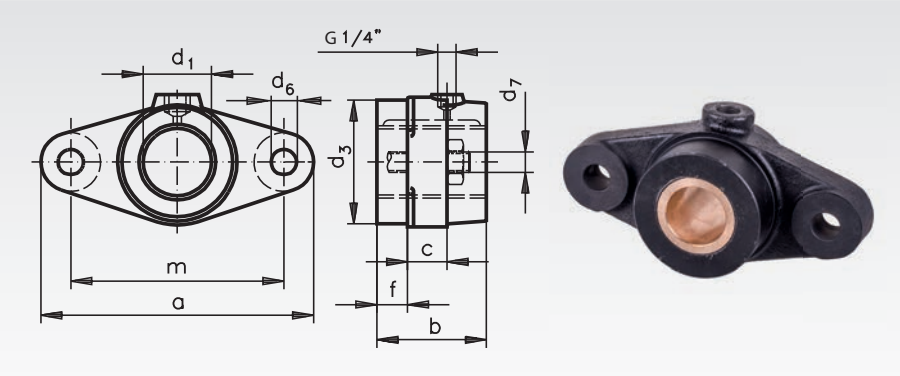

Ordering Details: e.g.: Product No. 621 025 00, Flange Bearing DIN 502 A, 25 mm Bore

Product No.	d_1 mm	b mm	d_3^{h9} mm	f mm	a mm	c mm	m mm	d_6 mm	d_7 mm	Weight kg
621 025 00	25	60	65	20	155	20	120	14	M12	1,4
621 030 00	30	60	65	20	155	20	120	14	M12	1,4
621 040 00	40	70	80	20	180	25	140	18	M16	3,0
621 050 00	50	80	90	20	210	30	160	22	M20	4,2

Flange Bearings DIN 502 Design B, without Bush

Material: Grey Cast Iron.

Bore Tolerance: ISO D7.

For compression lubricators type Stauffer

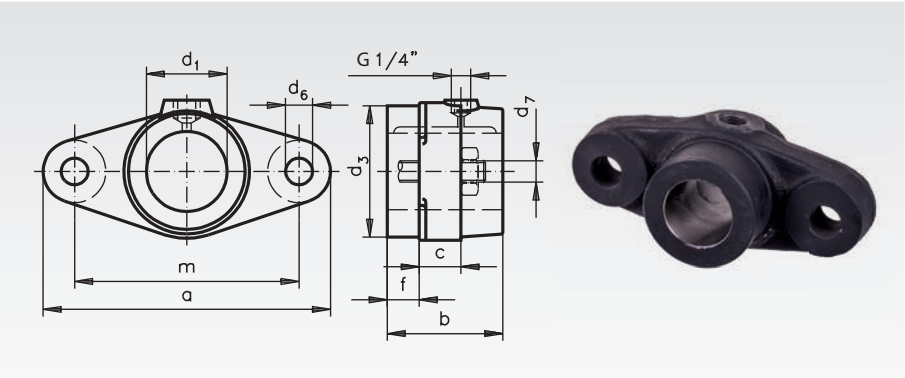

Ordering Details: e.g.: Product No. 621 125 00, Flange bearing DIN 502 B, 25 mm Bore

Product No.	d_1 mm	b mm	d_3^{h9} mm	f mm	a mm	c mm	m mm	d_6 mm	d_7 mm	Weight kg
621 125 00	25	60	50	20	135	20	100	14	M12	1,2
621 130 00	30	60	50	20	135	20	100	14	M12	1,2
621 135 00	35	60	65	20	155	20	120	14	M12	1,4
621 140 00	40	60	65	20	155	20	120	14	M12	1,4

Flange Bearing DIN 503 Design A, with Red Brass Bush

Material: Grey Cast Iron.
Bush Rg7 (G-CuSn7ZnPb).

Bore Tolerance: ISO D10.

For compression lubricators type Stauffer.

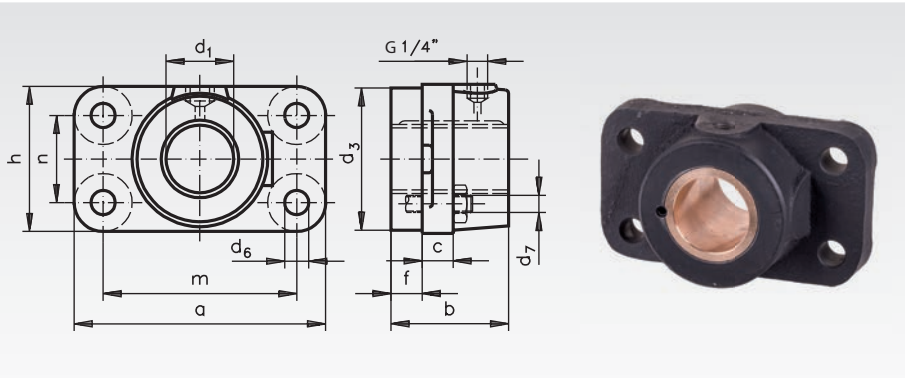

Ordering Details: e.g.: Product No. 621 240 00, Flange Bearing DIN 503 A, 40 mm Bore

Product No.	d_1 mm	b mm	d_3^{h9} mm	f mm	a mm	h mm	c mm	m mm	n mm	d_6 mm	d_7 mm	Weight kg
621 240 00	40	70	80	20	145	85	20	110	50	14	M12	3,1
621 250 00	50	80	100	20	175	105	25	130	60	18	M16	5,5
621 260 00	60	90	120	25	195	125	25	150	80	18	M16	8,1
621 270 00	70	100	140	25	220	150	30	170	100	22	M20	12,2
621 280 00	80	100	160	30	240	170	30	190	120	22	M20	14,9

Adjusting rings and clamping collars page 452.

Silver steel and precision shafts steel page 478.
Compression lubricators page 586.

Technical Explanations for Ball Pillow Block Bearings and Ball Flange Bearings on Page 426-428

Bearings: The nominal inside diameters correspond with the standard dimensions of the 6200 series bearings. The outer ring is spherical and allows an angular misalignment of +/- 2°.

Housings: The one-part housings are made from massive grey cast iron and the two-part ones are drawn from steel sheet. The grey cast iron housings are that rigidly built, that the full load capacity of the bearing can be used.

Materials: Only high-quality materials are used for housing bearing, housing and all other components.
Bearing: Bearing steel 100Cr6
Cast housing: GGL20 DIN 1691
Sheet-metal housing: St10-03 DIN 1623
Seal: synth. nitrile rubber (NBR)

Sealing: All housing bearings are supplied with an efficient, heat and oil resitant rubber seal. The constructive design of the seal varies with the different bearing types.

Maintenance: Due to the perfect sealing, all bearing types are usually maintenance free. In special application they can, however be relubricated. See lubrication.

Temperatures: Bearings and housings made from cast or steel sheet can be used in continuous operation from -30°C to +100°C. Bearings for higher temperatures on request.

Mounting on the shaft: The housing bearings are supplied with longer inner ring and adjusting screw. The fixation on the shaft depends on the effective axial shifting force of the inner ring. The stability mainly depends on the quality and the tolerance zone of of the shaft. To facilitate the assembly, the inner rings are - other than the norm - produced with a plus tolerance.

Tolerances of roller bearings:

Nominal Ø of Bore d^{H7} mm	Tol. of Bore d µm	Inner Ring Bi µm
> 10 - 18	+18 0	0 -120
> 18 - 30	+21 0	0 -120
> 30 - 50	+25 0	0 -120
> 50 - 80	+30 0	0 -120

Tolerances of outer rings:

Nominal Ø of Outer Rings D mm	Outer Rings D mm
> 30 - 50	0 -11
> 50 - 80	0 -13
> 80 - 120	0 -15
> 120 - 150	0 -18

Tolerances of Cast Housings according to ISO 8062:

Nominal Ø of Bore d mm	Tolerances of the connecting dimensions UCP h mm	UCF i mm	UCFL, UCFA e mm
12 - 50	± 0,15	± 0,5	± 0,7

Lubrication: All housing bearings are filled with a high-grade lithium-soap grease. In most mounting situations this lubricant-filling guarantees maintenance-free operation. In especially robust operating conditions with higher loads, speeds, temperatures, dirt etc. relubricating at shorter intervals may be required, depending on the application.

For relubrication we recommend using lithium-based grease. Under no circumstances use soda saponification.

Load bearing rating: The radial static and dynamic load bea ring ratings are stated at the individual bearings (axial = 20% of radial).

Speed and load: The permissible speed is directly connected to the load and the play at bearing bore and shaft diamterer

Ball Pillow Block Bearings TUCP, Thermoplastic Housing with Stainless Steel Bearing

Material: Housing: Thermoplast PBT, on choice black or white.
Rolling bearing: Stainless steel 1.4125 (X105CrMo17, AISI 440 C), lubricated with grease FM 222 for food processing machinery, with registration FDA, CIFA, KPF2K-20, NSF H1.

The rolling bearing can be swiveled when mounting to compensate shaft misalignement. The shaft will get fastened with 2 setscrews. Lubricated for life at normal operating conditions. Re-lubricating is possible. Delivery with stainless steel grease nipple.

Temperature range: -20°C to +90°C (for short time up to +120°C).

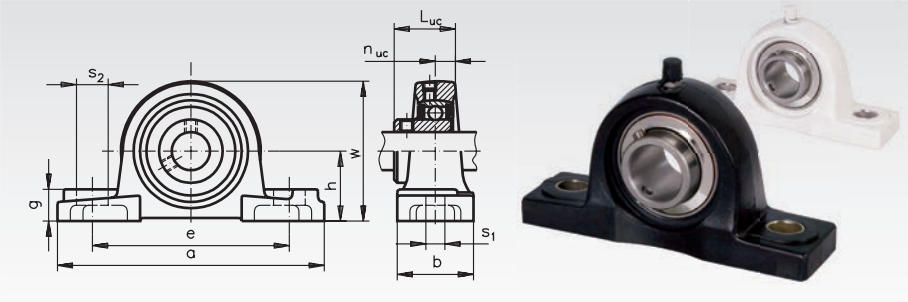

Ordering Details: e.g.: Product No. 625 551 12, Ball Pillow Block Bearing TUCP 201, black, Bore 12mm

Product No. Black	Product No. White	TUCP No.	Bore mm	h mm	a mm	e mm	b mm	s_1 mm	s_2 mm	g mm	w mm	L_{uc} mm	n_{uc} mm	Housing Load Rating radial* kN	Housing Load Rating axial** kN	Weight kg
625 551 12	**625 561 12**	201	12	33,3	127	95	38	11	14	14,2	65,5	31,0	12,7	7,7	5,0	0,30
625 551 15	**625 561 15**	202	15	33,3	127	95	38	11	14	14,2	65,5	31,0	12,7	7,7	5,0	0,30
625 551 17	**625 561 17**	203	17	33,3	127	95	38	11	14	14,2	65,5	31,0	12,7	7,7	5,0	0,30
625 551 20	**625 561 20**	204	20	33,3	127	95	38	11	14	14,2	65,5	31,0	12,7	7,7	5,0	0,28
625 551 25	**625 561 25**	205	25	36,5	140,5	105	38	11	14	14,5	71,0	34,0	14,3	10,0	8,1	0,34
625 551 30	**625 561 30**	206	30	42,9	163	119	46	14	18	17,8	84,0	38,1	15,9	10,6	5,8	0,52
625 551 35	**625 561 35**	207	35	47,6	170	127	48	14	18	18,0	94,5	42,9	17,5	10,8	7,5	0,73
625 551 40	**625 561 40**	208	40	49,2	184	137	54	14	18	19,5	99,0	49,2	19,0	11,1	8,5	1,00
625 551 45	**625 561 45**	209	45	54,0	192	146	54	17	20	23,0	106,0	49,2	19,0	11,4	9,0	1,15
625 551 50	**625 561 50**	210	50	57,2	206	159	60	17	20	23,0	114,0	51,6	19,0	11,8	9,6	1,34

* Maximum radial load if axial force = 0.
** Maximum axial load if radial force = 0.

Protection Caps for Thermoplastic Pillow Bearings TUCP, TUCF and TUCFL

Material: Thermoplast PBT, on choice black or white.

Open Design with sealing for shaft side or closed design.

The caps fit only on the one bearing side with the setscrews. They can get clipped on by hand by the customer.

Temperature range: -20°C to +90°C (for short time up to +120°C).



Ordering Details: e.g.: Product No. 625 552 17, Protection Cap, black, Open Design, for Bearing Size 203

Product No. Black	Product No. White	Design	for bearing size	Bore mm	Ø D mm	Length L mm	Weight g
625 552 17	-	open	203	17	50	23	10
625 552 20	**625 562 20**	open	204	20	50	23	10
625 552 25	**625 562 25**	open	205	25	55	25	15
625 552 30	**625 562 30**	open	206	30	64	30	20
625 552 35	**625 562 35**	open	207	35	74,5	32	20
625 552 40	**625 562 40**	open	208	40	84	37	30
625 552 45	**625 562 45**	open	209	45	89	41	30
625 552 50	**625 562 50**	open	210	50	94	47	35
625 553 20	**625 563 20**	closed	201 - 204	-	50	23	10
625 553 25	**625 563 25**	closed	205	-	55	25	10
625 553 30	**625 563 30**	closed	206	-	64	30	15
625 553 35	**625 563 35**	closed	207	-	74,5	32	20
625 553 40	**625 563 40**	closed	208	-	84	37	30
625 553 45	**625 563 45**	closed	209	-	89	41	30
625 553 50	**625 563 50**	closed	210	-	94	47	35

Ball Flange Bearings TUCF, Thermoplastic Housing with Stainless Steel Bearing

Material: Housing: Thermoplast PBT, on choice black or white.
Rolling bearing: Stainless steel 1.4125 (X105CrMo17, AISI 440 C), lubricated with grease FM 222 for food processing machinery, with registration FDA, CIFA, KPF2K-20, NSF H1. The rolling bearing can be swiveled when mounting to compensate shaft misalignement. The shaft will get fastened with 2 setscrews. Lubricated for life at normal operating conditions. Re-lubricating is possible. Delivery with stainless steel grease nipple.
Temperature range: -20°C to +90°C (for short time up to +120°C).

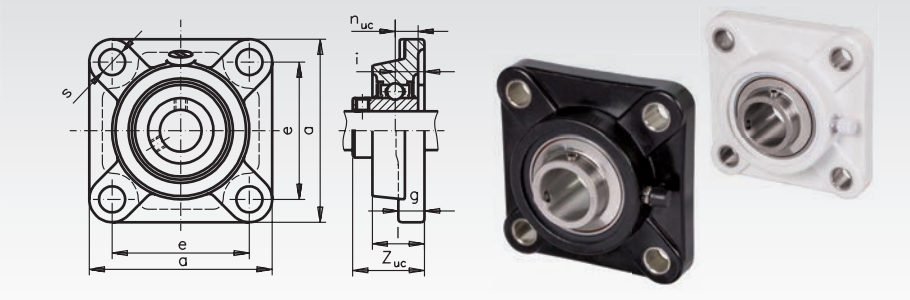

Ordering Details: e.g.: Product No. 626 550 17, Ball Flange Bearing TUCF 203, black, Bore 17mm

Product No. Black	Product No. White	TUCF No.	Bore mm	a mm	e mm	i mm	g mm	l mm	s mm	Z_{uc} mm	n_{uc} mm	Housing Load Rating radial* kN	Housing Load Rating axial** kN	Weight kg
626 550 12	**626 560 12**	201	12	86	63,5	18	13,4	27,8	11	36,3	12,7	16	3,7	0,30
626 550 15	**626 560 15**	202	15	86	63,5	18	13,4	27,8	11	36,3	12,7	16	3,7	0,30
626 550 17	**626 560 17**	203	17	86	63,5	18	13,4	27,8	11	36,3	12,7	16	3,7	0,30
626 550 20	**626 560 20**	204	20	86	63,5	18	13,4	27,8	11	36,3	12,7	16	3,7	0,28
626 550 25	**626 560 25**	205	25	95	70	17	14,0	28,0	11	36,7	14,3	13	3,4	0,35
626 550 30	**626 560 30**	206	30	107	83	19,2	14,3	31,5	11	41,4	15,9	18	3,4	0,50
626 550 35	**626 560 35**	207	35	118	92	21,5	15,5	34,8	13	46,9	17,5	18,5	3,5	0,74
626 550 40	**626 560 40**	208	40	130	102	23	17,0	37,5	14	53,2	19	19,1	3,8	0,98
626 550 45	**626 560 45**	209	45	137	105	24	19,0	41,0	17	54,2	19	19,4	3,9	1,12
626 550 50	**626 560 50**	210	50	143	111	25	21,0	43,0	17	57,6	19	19,7	4,0	1,30

* Maximum radial load if axial force = 0.
** Maximum axial load if radial force = 0.

Ball Flange Bearings TUCFL, Thermoplastic Housing with Stainless Steel Bearing

Material: Housing: Thermoplast PBT, on choice black or white.
Rolling bearing: Stainless steel 1.4125 (X105CrMo17, AISI 440 C), lubricated with grease FM 222 for food processing machinery, with registration FDA, CIFA, KPF2K-20, NSF H1. The rolling bearing can be swiveled when mounting to compensate shaft misalignement. The shaft will get fastened with 2 setscrews. Lubricated for life at normal operating conditions. Re-lubricating is possible. Delivery with stainless steel grease nipple.
Temperature range: -20°C to +90°C (for short time up to +120°C).

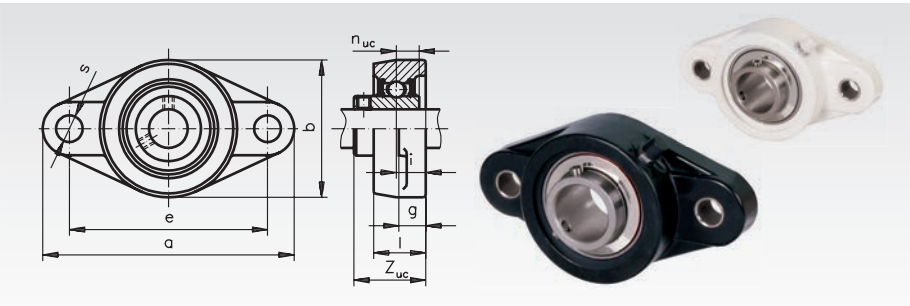

Ordering Details: e.g.: Product No. 626 551 17, Ball Flange Bearing TUCFL 203, black, Bore 17mm

Product No. Black	Product No. White	TUCFL No.	Bore mm	a mm	b mm	e mm	i mm	g mm	l mm	s mm	Z_{uc} mm	n_{uc} mm	Housing Load Rating* vertical kN	Housing Load Rating* horizontal kN	Weight kg
626 551 12	**626 561 12**	201	12	113	65	90	15,4	11,4	26,5	11	33,7	12,7	8,5	11,8	0,26
626 551 15	**626 561 15**	202	15	113	65	90	15,4	11,4	26,5	11	33,7	12,7	8,5	11,8	0,26
626 551 17	**626 561 17**	203	17	113	65	90	15,4	11,4	26,5	11	33,7	12,7	8,5	11,8	0,26
626 551 20	**626 561 20**	204	20	113	65	90	15,4	11,4	26,5	11	33,7	12,7	8,5	11,8	0,24
626 551 25	**626 561 25**	205	25	131	69,5	99	17	13,5	29,1	11	36,7	14,3	11,1	11,4	0,30
626 551 30	**626 561 30**	206	30	148	80	117	19	13,3	30,5	11	41,2	15,9	14,2	16,5	0,45
626 551 35	**626 561 35**	207	35	164	90	130	18	16,1	32,8	13	43,4	17,5	14,9	16,9	0,64
626 551 40	**626 561 40**	208	40	176	100	144	21,5	20	37,5	14	51,7	19	15,2	17,4	0,89
626 551 45	**626 561 45**	209	45	188	108	148	24	21	41	17	54,2	19	15,4	17,6	1,02
626 551 50	**626 561 50**	210	50	197	115	157	25	21	43	17	57,6	19	15,7	18,0	1,21

* Not recommended for axial force.

Ball Pillow Block Bearings UCP (Grey Cast Iron)

Material: Housing from grey cast iron. Rolling bearing from bearing steel.

The rolling bearing can be swiveled when mounting to compensate shaft misalignement. The shaft will get fastened with 2 setscrews. Lubricated for life at normal operating conditions. Re-lubricating is possible.

Technical explanations page 423.

Delivery with grease nipple.

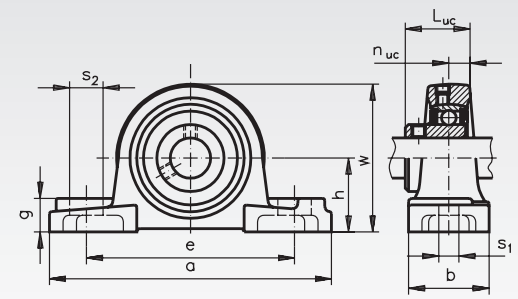



Ordering Details: e.g.: Product No. 625 112 00, Ball Pillow Block Bearing UCP 201, Bore 12mm

Product No.	UCP No.	Bore mm	h mm	a mm	e mm	b mm	s_1 mm	s_2 mm	g mm	w mm	L_{uc} mm	n_{uc} mm	Bearing-Load Rating* dyn. C kN	stat. C_0 kN	Weight kg
625 112 00	201	12	30,2	127	95	38	13	19	14	62	31,0	12,7	9,9	6,2	0,61
625 115 00	202	15	30,2	127	95	38	13	19	14	62	31,0	12,7	9,9	6,2	0,61
625 117 00	203	17	30,2	127	95	38	13	19	14	62	31,0	12,7	9,9	6,0	0,61
625 120 00	204	20	33,3	127	95	38	13	19	14	65	31,0	12,7	9,9	6,0	0,65
625 125 00	205	25	36,5	140	105	38	13	19	15	71	34,1	14,3	10,8	7,0	0,79
625 130 00	206	30	42,9	163	121	46	17	21	17	82	38,1	15,9	15,1	10,0	1,27
625 135 00	207	35	47,6	167	127	47	17	21	18	92	42,9	17,5	19,9	13,7	1,56
625 140 00	208	40	49,2	178	136	52	17	21	18	97	49,2	19,0	22,6	15,7	1,97
625 145 00	209	45	54,0	189	146	54	17	21	21	105	49,2	19,0	25,2	17,8	2,27
625 150 00	210	50	57,2	206	159	60	20	23	21	113	51,6	19,0	27,1	19,7	2,70
625 155 00	211	55	63,5	217	171	59	20	25	24	123	55,6	22,2	33,4	29,2	3,02
625 160 00	212	60	69,8	240	183	69	20	25	26	135	65,1	25,4	47,8	33,0	4,80
625 165 00	213	65	76,2	263	203	68	25	30	28	149	65,1	25,4	44,0	40,0	5,14
625 170 00	214	70	79,4	266	210	69	25	30	28	155	74,6	30,2	46,8	45,0	5,59
625 175 00	215	75	82,6	273	217	74	25	30	28	163	77,8	33,3	50,9	49,3	6,47
625 180 00	216	80	88,9	290	231	77	25	30	33	174	82,6	33,3	55,0	53,3	7,27

* Maximum radial load if axial force = 0. The axial load rating is approx. 20% of the radial load rating.

Ball Pillow Block Bearings BPP (Two-Part Steel Sheet, Zinc-Plated)

Material: Housing from two-part steel sheets, zinc-plated. Rolling bearing from bearing steel.

The rolling bearing can be swiveled when mounting to compensate shaft misalignement. The shaft will get fastened with 2 setscrews. Lubricated for life at normal operating conditions. Re-lubricating is not possible.

Technical explanations page 423.

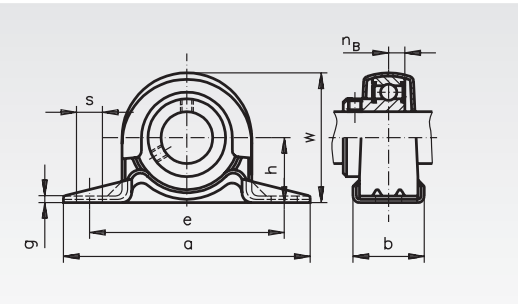



Ordering Details: e.g.: Product No. 625 212 00, Ball Pillow Block Bearing BPP 201, Bore 12mm

Product No.	BPP No.	Bore mm	h mm	a mm	e mm	b mm	s mm	g mm	w mm	n_B mm	Permissible Housing Load kN	Bearing-Load Rating* dyn. C kN	stat. C_0 kN	Weight kg
625 212 00	201	12	22,2	86	68	25	9,5	3	43,8	6	2,16	7,4	4,5	0,16
625 215 00	202	15	22,2	86	68	25	9,5	3	43,8	6	2,16	7,4	4,5	0,16
625 217 00	203	17	22,2	86	68	25	9,5	3	43,8	6	2,16	7,4	4,5	0,16
625 220 00	204	20	25,4	99	76	32	9,5	3	50,5	7	2,62	9,9	6,2	0,23
625 225 00	205	25	28,6	108	86	32	11,5	4	56,6	7,5	3,72	10,8	7,0	0,28
625 230 00	206	30	33,3	117	95	38	11,5	4	66,3	8	4,41	15,1	10,0	0,47
625 235 00	207	35	39,7	129	106	42	11,5	5	78	8,5	4,90	19,9	13,7	0,60

* Maximum radial load if axial force = 0. Regard the housing load. The axial load rating is approx. 20% of the radial load rating.

Ball Flange Bearings UCF (Grey Cast Iron)

Material: Housing from grey cast iron. Rolling bearing from bearing steel.

The rolling bearing can be swiveled when mounting to compensate shaft misalignement. The shaft will get fastened with 2 setscrews. Lubricated for life at normal operating conditions. Re-lubricating is possible.

Technical explanations page 423.

Delivery with grease nipple.

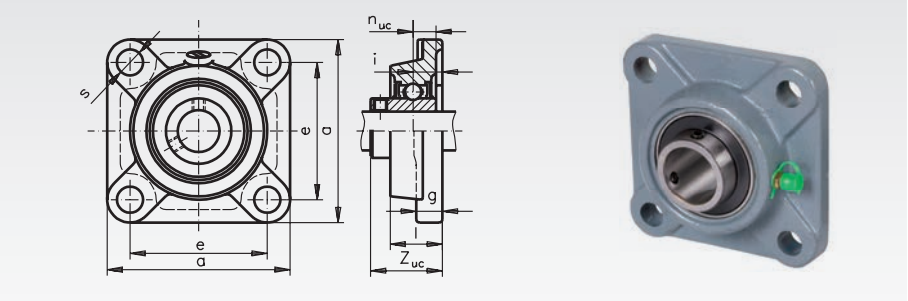

Ordering Details: e.g.: Product No. 626 012 00, Ball Flange Bearing UCF 201, Bore 12mm

Product No.	UCF No.	Bore mm	a mm	e mm	i mm	g mm	l mm	s mm	Z_{uc} mm	n_{uc} mm	Bearing-Load Rating* dyn. C kN	stat. C_0 kN	Weight kg
626 012 00	201	12	86	64	15	12	25,5	12	33,3	12,7	9,9	6,2	0,62
626 015 00	202	15	86	64	15	12	25,5	12	33,3	12,7	9,9	6,2	0,62
626 017 00	203	17	86	64	15	12	25,5	12	33,3	12,7	9,9	6,2	0,62
626 020 00	204	20	86	64	15	12	25,5	12	33,3	12,7	9,9	6,2	0,59
626 025 00	205	25	95	70	16	13	27,0	12	34,1	14,3	10,8	7,0	0,82
626 030 00	206	30	108	83	18	14	31,0	12	38,1	15,9	15,1	10,0	1,00
626 035 00	207	35	117	92	19	16	34,0	14	42,9	17,5	19,9	13,7	1,40
626 040 00	208	40	130	102	21	16	36,0	16	49,2	19,0	22,6	15,7	2,00
626 045 00	209	45	137	105	22	18	38,0	16	49,2	19,0	25,2	17,8	2,20
626 050 00	210	50	143	111	22	18	40,0	16	51,6	19,0	27,1	19,7	2,40
626 055 00	211	55	162	130	25	20	43,0	19	55,6	22,2	33,4	29,2	3,08
626 060 00	212	60	175	143	29	20	48,0	19	65,1	25,4	47,8	33,0	4,80
626 065 00	213	65	187	149	30	22	50,0	19	65,1	25,4	44,0	40,0	4,78
626 070 00	214	70	193	152	31	22	54,0	19	74,6	30,2	46,8	45,0	5,32
626 075 00	215	75	200	159	34	22	56,0	19	77,8	33,3	50,9	49,3	6,17
626 080 00	216	80	208	165	34	22	58,0	23	82,6	33,3	55,0	53,3	7,03

* Maximum radial load if axial force = 0. The axial load rating is approx. 20% of the radial load rating.

Ball Flange Bearings UCFL (Grey Cast Iron)

Material: Housing from grey cast iron. Rolling bearing from bearing steel.

The rolling bearing can be swiveled when mounting to compensate shaft misalignement. The shaft will get fastened with 2 setscrews. Lubricated for life at normal operating conditions. Re-lubricating is possible.

Technical explanations page 423.

Delivery with grease nipple.

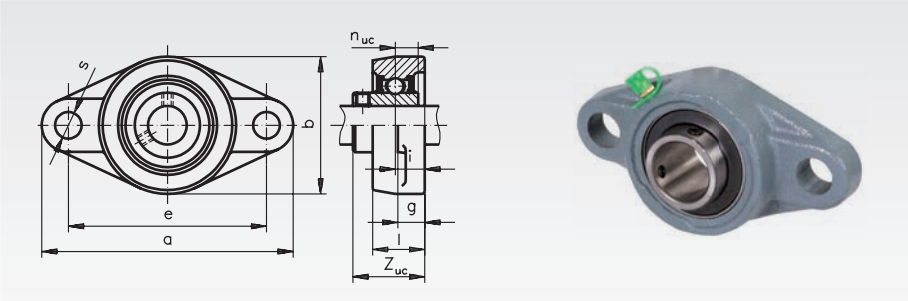

Ordering Details: e.g.: Product No. 626 112 00, Ball Flange Bearing UCFL 201, Bore 12mm

Product No.	UCFL No.	Bore mm	a mm	b mm	e mm	i mm	g mm	l mm	s mm	Z_{uc} mm	n_{uc} mm	Bearing-Load Rating* dyn. C kN	stat. C_0 kN	Weight kg
626 112 00	201	12	113	60	90	15	11	25,5	12	33,3	12,7	9,9	6,2	0,48
626 115 00	202	15	113	60	90	15	11	25,5	12	33,3	12,7	9,9	6,2	0,48
626 117 00	203	17	113	60	90	15	11	25,5	12	33,3	12,7	9,9	6,2	0,48
626 120 00	204	20	113	60	90	15	11	25,5	12	33,3	12,7	9,9	6,2	0,45
626 125 00	205	25	130	68	99	16	13	27	16	35,7	14,3	10,8	7,0	0,60
626 130 00	206	30	148	80	117	18	13	31	16	40,2	15,9	15,1	10,0	0,90
626 135 00	207	35	161	90	130	19	15	34	16	44,1	17,5	19,9	13,7	1,20
626 140 00	208	40	175	100	144	21	15	36	16	51,2	19	22,6	15,7	1,60
626 145 00	209	45	188	108	148	22	16	38	19	52,2	19	25,2	17,8	1,90
626 150 00	210	50	197	115	157	22	16	40	19	54,6	19	27,1	19,7	2,20

* Maximum radial load if axial force = 0. The axial load rating is approx. 20% of the radial load rating.

Ball Flange Bearings UCFA (Grey Cast Iron)

Material: Housing from grey cast iron.
Rolling bearing from bearing steel.

With 2 mounting holes, one of them slotted.

The rolling bearing can be swiveled when mounting to compensate shaft misalignement. The shaft will get fastened with 2 setscrews. Lubricated for life at normal operating conditions. Re-lubricating is possible. Technical explanations page 423.

Delivery with grease nipple.

Ordering Details: e.g.: Product No. 626 312 00, Ball Flange Bearing UCFA 201, Bore 12mm

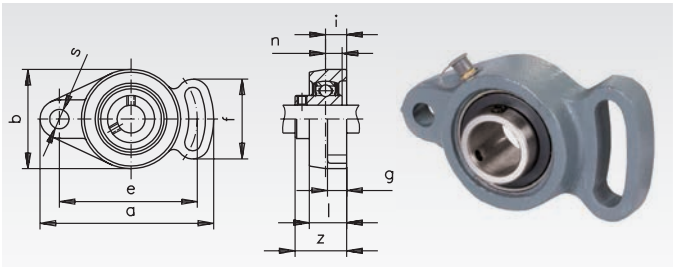

Product No.	UCFA No.	Bore mm	a mm	b mm	e mm	i mm	g mm	l mm	s mm	f mm	Z_{uc} mm	n_{uc} mm	Bearing-Load Rating* dyn. C kN	stat. C_0 kN	Weight kg
626 312 00	201	12	101	60	78	15	12	25,5	10	53	33,3	12,7	9,9	6,2	0,47
626 315 00	202	15	101	60	78	15	12	25,5	10	53	33,3	12,7	9,9	6,2	0,47
626 317 00	203	17	101	60	78	15	12	25,5	10	53	33,3	12,7	9,9	6,2	0,47
626 320 00	204	20	101	60	78	15	12	25,5	10	53	33,3	12,7	9,9	6,2	0,47
626 325 00	205	25	125	68	98	16	14	27	12	65	35,7	14,3	10,8	7,0	0,68
626 330 00	206	30	143	80	117	18	14	31	12	72	40,2	15,9	15,1	10,0	1,00
626 335 00	207	35	161	90	130	19	16	34	15	82	44,4	17,5	19,9	13,7	1,50
626 340 00	208	40	175	100	144	21	16	36	15	87	51,2	19	22,6	15,7	1,90
626 345 00	209	45	181	108	148	22	18	38	15	90	52,2	19	25,2	17,8	2,03
626 350 00	210	50	190	115	157	22	18	40	15	94	54,6	19	27,1	19,7	2,38

* Maximum radial load if axial force = 0. The axial load rating is approx. 20% of the radial load rating.

Ball Flange Bearings BPF (Two-Part Steel Sheet, Zinc Plated)

Material: Housing from two-part steel sheets, zinc-plated.
Rolling bearing from bearing steel.

The rolling bearing can be swiveled when mounting to compensate shaft misalignement. The shaft will get fastened with 2 setscrews. Lubricated for life at normal operating conditions. Re-lubricating is not possible.

Technical explanations page 423.

Ordering Details: e.g.: Product No. 626 412 00, Ball Flange Bearing BPF 201, Bore 12mm

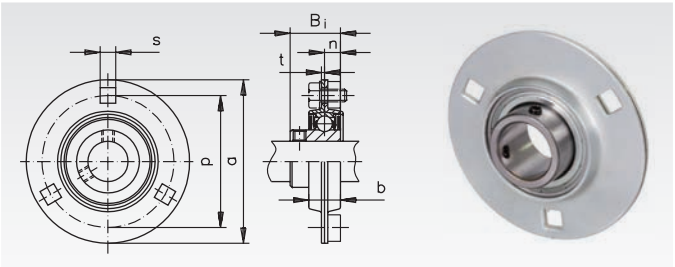

Product No.	BPF No.	Bore mm	a mm	p mm	t mm	b mm	s mm	B_i mm	n mm	Permissible Housing Load kN	Bearing-Load Rating* dyn. C kN	stat. C_0 kN	Weight kg
626 412 00	201	12	81	63,5	2	14	7,1	22	6	2,65	7,4	4,5	0,27
626 415 00	202	15	81	63,5	2	14	7,1	22	6	2,65	7,4	4,5	0,27
626 417 00	203	17	81	63,5	2	14	7,1	22	6	2,65	7,4	4,5	0,27
626 420 00	204	20	90	71,5	2	16	9	25	7	3,09	9,9	6,2	0,33
626 425 00	205	25	95	76	2	18	9	27	7,5	3,53	10,8	7,0	0,38
626 430 00	206	30	113	90,5	2,5	19	11	30	8	4,90	15,1	10,0	0,62
626 435 00	207	35	122	100	2,5	22	11	32	8,5	6,23	19,9	13,7	0,82

* Maximum radial load if axial force = 0. Regard the housing load. The axial load rating is approx. 20% of the radial load rating.

Ball Flange Bearings BPFL (Two-Part Steel Sheet, Zinc-Plated)

Material: Housing from two-part steel sheets, zinc-plated.
Rolling bearing from bearing steel.

With 2 mounting holes.

The rolling bearing can be swiveled when mounting to compensate shaft misalignement. The shaft will get fastened with 2 setscrews. Lubricated for life at normal operating conditions. Re-lubricating is not possible.

Technical explanations page 423.

Ordering Details: e.g.: Product No. 626 512 00, Ball Flange Bearing BPFL 201, Bore 12mm

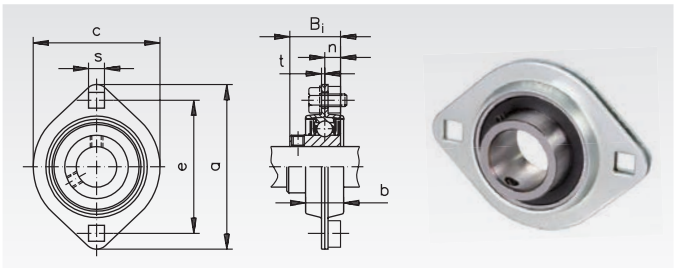

Product No.	BPFL No.	Bore mm	a mm	e mm	t mm	b mm	c mm	s mm	B_i mm	n mm	Permissible Housing Load kN	Bearing-Load Rating* dyn. C kN	stat. C_0 kN	Weight kg
626 512 00	201	12	81	63,5	2	14	59	7,1	22	6	2,65	7,4	4,5	0,19
626 515 00	202	15	81	63,5	2	14	59	7,1	22	6	2,65	7,4	4,5	0,19
626 517 00	203	17	81	63,5	2	14	59	7,1	22	6	2,65	7,4	4,5	0,19
626 520 00	204	20	90	71,5	2	16	67	9	25	7	3,09	9,9	6,2	0,24
626 525 00	205	25	95	76,0	2	18	71	9	27	7,5	3,53	10,8	7,0	0,28
626 530 00	206	30	113	90,5	2,5	19	84	11	30	8	4,90	15,1	10,0	0,38
626 535 00	207	35	122	100	2,5	22	94	11	32	8,5	6,23	19,9	13,7	0,58

* Maximum radial load if axial force = 0. Regard the housing load. The axial load rating is approx. 20% of the radial load rating.

Ball Pillow Block Bearings SSUCP, Stainless Steel

Material: Housing: Stainless steel 1.4305 (X5CrNi18-10, AISI 304).
Rolling bearing: Stainless steel 1.4125 (X105CrMo17, AISI 440 C), lubricated with grease FM 222 for food processing machinery, with registration FDA, CIFA, KPF2K-20, NSF H1.

The rolling bearing can be swiveled when mounting to compensate shaft misalignement. The shaft will get fastened with 2 setscrews. Lubricated for life at normal operating conditions. Re-lubricating is possible.

Delivery with stainless steel grease nipple.

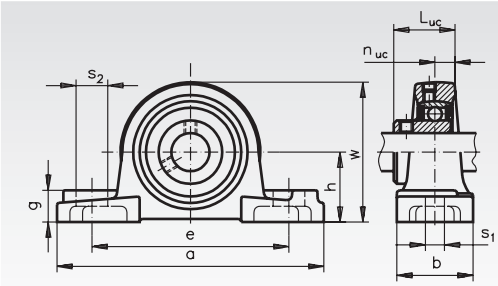



Ordering Details: e.g.: Product No. 625 991 12, Ball Pillow Block Bearing SSUCP 201, Bore 12mm

Product No. Stainless	SSUCP No.	Bore mm	h mm	a mm	e mm	b mm	s_1 mm	s_2 mm	g mm	w mm	L_{uc} mm	n_{uc} mm	Bearing-Load Rating* dyn. C kN	stat. C_0 kN	Weight kg
625 991 12	201	12	33,3	127	95	38	13	19	15	65	31	12,7	12,8	6,7	0,84
625 991 15	202	15	33,3	127	95	38	13	19	15	65	31	12,7	12,8	6,7	0,82
625 991 17	203	17	33,3	127	95	38	13	19	15	65	31	12,7	12,8	6,7	0,81
625 991 20	204	20	33,3	127	95	38	13	19	15	65	31	12,7	12,8	6,7	0,81
625 991 25	205	25	36,5	140	105	38	13	16	16	70	34	14,3	14,0	7,9	0,99
625 991 30	206	30	42,9	163	121	48	17	21	18	83	38,1	15,9	19,5	11,3	1,62
625 991 35	207	35	47,6	167	127	48	17	21	19	94	42,9	17,5	25,7	15,3	2,08
625 991 40	208	40	49,2	184	137	54	17	25	19	100	49,2	19	29,5	18,2	2,65
625 991 45	209	45	54,0	190	146	54	17	22	20	108	49,2	19	31,7	20,7	2,90
625 991 50	210	50	57,2	206	159	60	20	25	22	114	51,6	19	35,1	23,2	2,59

* Maximum radial load if axial force = 0.
The axial load rating is approx. 20% of the radial load rating.

Ball Pillow Block Bearings SSBPP, Two-Part Sheet, Stainless Steel

Material: Housing from two-part sheets: Stainless steel 1.4305 (X5CrNi18-10, AISI 304).
Rolling bearing: Stainless steel 1.4125 (X105CrMo17, AISI 440 C), lubricated with grease FM 222 for food processing machinery, with registration FDA, CIFA, KPF2K-20, NSF H1.

The rolling bearing can be swiveled when mounting to compensate shaft misalignement. The shaft will get fastened with 2 setscrews. Lubricated for life at normal operating conditions. Re-lubricating is not possible.

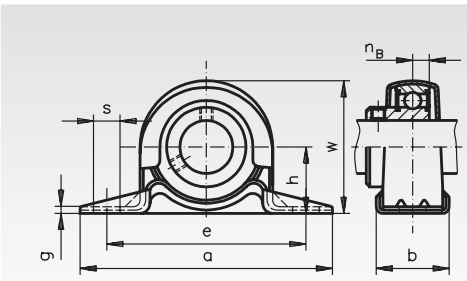



Ordering Details: e.g.: Product No. 625 992 12, Ball Pillow Block Bearing SSBPP 201

Product No.	SSBPP No.	Bore mm	h mm	a mm	e mm	b mm	s mm	g mm	w mm	n_B mm	Permissible Housing Load kN	Bearing-Load Rating* dyn. C kN	stat. C_0 kN	Weight kg
625 992 12	201	12	22,2	86	68	25	9,5	3,5	43,8	6	2,16	9,6	4,8	0,19
625 992 15	202	15	22,2	86	68	25	9,5	3,5	43,8	6	2,16	9,6	4,8	0,19
625 992 17	203	17	22,2	86	68	25	9,5	3,5	43,8	6	2,16	9,6	4,8	0,19
625 992 20	204	20	25,4	98	76	32	9,5	3,5	50,5	7	2,62	12,9	6,7	0,23
625 992 25	205	25	28,6	108	86	32	11,5	4	56,6	7,5	3,72	14,0	7,9	0,32
625 992 30	206	30	33,3	117	95	38	11,5	4	66,3	8	4,41	19,5	11,3	0,50
625 992 35	207	35	39,7	130	106	42	11	5	78	8,5	4,90	25,7	15,3	0,60

* Maximum radial load if axial force = 0. Regard the housing load. The axial load rating is approx. 20% of the radial load rating.

Ball Flange Bearings SSUCF, Stainless Steel

Material: Housing: Stainless steel 1.4305 (X5CrNi18-10, AISI 304).
Rolling bearing: Stainless steel 1.4125 (X105CrMo17, AISI 440 C), lubricated with grease FM 222 for food processing machinery, with registration FDA, CIFA, KPF2K-20, NSF H1.

The rolling bearing can be swiveled when mounting to compensate shaft misalignement. The shaft will get fastened with 2 setscrews. Lubricated for life at normal operating conditions. Re-lubricating is possible.

Delivery with stainless steel grease nipple.

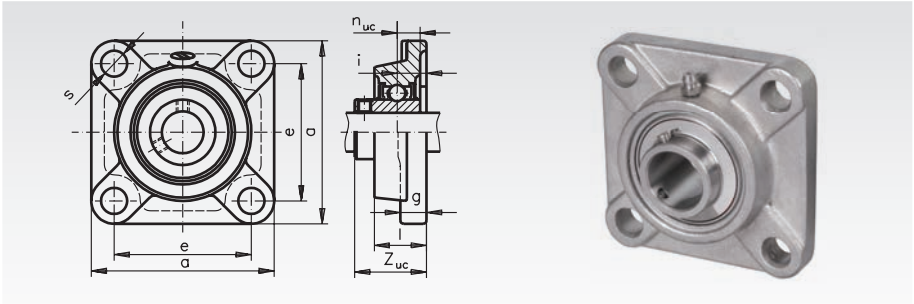

Ordering Details: e.g.: Product No. 626 990 12, Ball Flange Bearing SSUCF 201, Bore 12mm

Product No. Stainless	SSUCF No.	Bore mm	a mm	e mm	i mm	g mm	l mm	s mm	Z_{uc} mm	n_{uc} mm	Bearing-Load Rating* dyn. C kN	stat. C_0 kN	Weight kg
626 990 12	201	12	86	64	15	12	25,5	12	33,3	12,7	12,8	6,7	0,84
626 990 15	202	15	86	64	15	12	25,5	12	33,3	12,7	12,8	6,7	0,82
626 990 17	203	17	86	64	15	12	25,5	12	33,3	12,7	12,8	6,7	0,81
626 990 20	204	20	86	64	15	12	25,5	12	33,3	12,7	12,8	6,7	0,79
626 990 25	205	25	95	70	16	14	27	12	35,7	14,3	14,0	7,9	1,02
626 990 30	206	30	108	83	18	14	31	12	40,2	15,9	19,5	11,3	1,42
626 990 35	207	35	117	92	19	16	34	14	44,4	17,5	25,7	15,3	1,98
626 990 40	208	40	130	102	21	16	36	16	51,2	19	29,5	18,2	2,55
626 990 45	209	45	137	105	22	18	38	16	52,2	19	31,7	20,7	3,00
626 990 50	210	50	143	111	22	18	40	16	54,6	19	35,1	23,2	3,29

* Maximum radial load if axial force = 0.
The axial load rating is approx. 20% of the radial load rating.

Ball Flange Bearings SSUCFL, Stainless Steel

Material: Housing: Stainless steel 1.4305 (X5CrNi18-10, AISI 304).
Rolling bearing: Stainless steel 1.4125 (X105CrMo17, AISI 440 C), lubricated with grease FM 222 for food processing machinery, with registration FDA, CIFA, KPF2K-20, NSF H1.

The rolling bearing can be swiveled when mounting to compensate shaft misalignement. The shaft will get fastened with 2 setscrews. Lubricated for life at normal operating conditions. Re-lubricating is possible.

Delivery with stainless steel grease nipple.

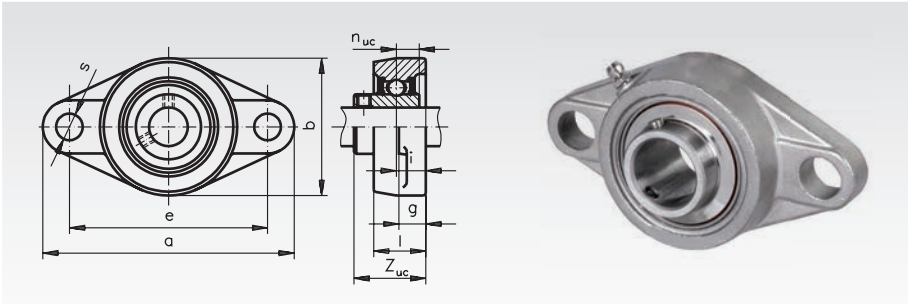

Ordering Details: e.g.: Product No. 626 991 12, Ball Flange Bearing SSUCFL 201, Bore 12mm

Product No. Stainless	SSUCFL No.	Bore mm	a mm	b mm	e mm	i mm	g mm	l mm	s mm	Z_{uc} mm	n_{uc} mm	Bearing-Load Rating* dyn. C kN	stat. C_0 kN	Weight kg
626 991 12	201	12	113	60	90	15	12	25,5	12	33,3	12,7	12,8	6,7	0,70
626 991 15	202	15	113	60	90	15	12	25,5	12	33,3	12,7	12,8	6,7	0,68
626 991 17	203	17	113	60	90	15	12	25,5	12	33,3	12,7	12,8	6,7	0,67
626 991 20	204	20	113	60	90	15	12	25,5	12	33,3	12,7	12,8	6,7	0,65
626 991 25	205	25	125	68	99	16	14	27	16	35,7	14,3	14,0	7,9	0,83
626 991 30	206	30	141	80	117	18	14	31	16	40,2	15,9	19,5	11,3	1,26
626 991 35	207	35	157	90	130	19	16	34	16	44,4	17,5	25,7	15,3	1,68
626 991 40	208	40	172	100	144	21	16	36	16	51,2	19	29,5	18,2	2,25
626 991 45	209	45	179	108	148	22	18	38	19	52,2	19	31,7	20,7	2,60
626 991 50	210	50	189	115	157	22	18	40	19	54,6	19	35,1	23,2	2,99

* Maximum radial load if axial force = 0.
The axial load rating is approx. 20% of the radial load rating.

Ball Flange Bearings SSBPF, Two-Part Steel Sheet, Stainless Steel

Material: Housing from two-part sheets: Stainless steel 1.4305 (X5CrNi18-10, AISI 304). Rolling bearing: Stainless steel 1.4125 (X105CrMo17, AISI 440 C), lubricated with grease FM 222 for food processing machinery, with registration FDA, CIFA, KPF2K-20, NSF H1.

STAINLESS

The rolling bearing can be swiveled when mounting to compensate shaft misalignement. The shaft will get fastened with 2 setscrews. Lubricated for life at normal operating conditions. Re-lubricating is not possible.

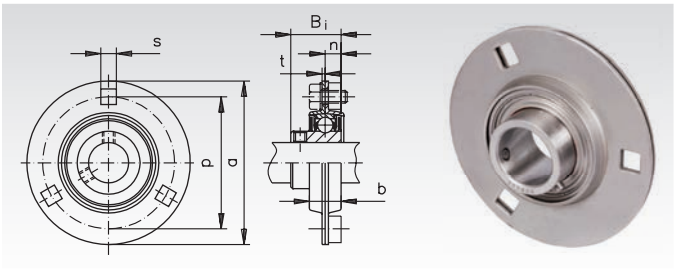

Ordering Details: e.g.: Product No. 626 994 12, Ball Flange Bearing SSBPF 201

Product No.	SSBPF No.	Bore mm	a mm	p mm	t mm	b mm	s mm	B_i mm	n mm	Permissible Housing Load kN	Bearing-Load Rating* dyn. C kN	stat. C_0 kN	Weight kg
626 994 12	201	12	81	63,5	2	14	7,1	22	6	2,65	9,6	4,8	0,27
626 994 15	202	15	81	63,5	2	14	7,1	22	6	2,65	9,6	4,8	0,27
626 994 17	203	17	81	63,5	2	14	7,1	22	6	2,65	9,6	4,8	0,27
626 994 20	204	20	90	71,5	2	16	9	25	7	3,09	12,9	6,7	0,33
626 994 25	205	25	95	76	2	18	9	27	7,5	3,53	14,0	7,9	0,38
626 994 30	206	30	113	90,5	2,6	19	11	30	8	4,90	19,5	11,3	0,62
626 994 35	207	35	122	100	2,6	22	11	32	8,5	6,23	25,7	15,3	0,82

* Maximum radial load if axial force = 0. Regard the housing load. The axial load rating is approx. 20% of the radial load rating.

Ball Flange Bearings SSBPFL, Two-Part Steel Sheet, Stainless Steel

Material: Housing from two-part sheets: Stainless steel 1.4305 (X5CrNi18-10, AISI 304). Rolling bearing: Stainless steel 1.4125 (X105CrMo17, AISI 440 C), lubricated with grease FM 222 for food processing machinery, with registration FDA, CIFA, KPF2K-20, NSF H1.

STAINLESS

The rolling bearing can be swiveled when mounting to compensate shaft misalignement. The shaft will get fastened with 2 setscrews. Lubricated for life at normal operating conditions. Re-lubricating is not possible.

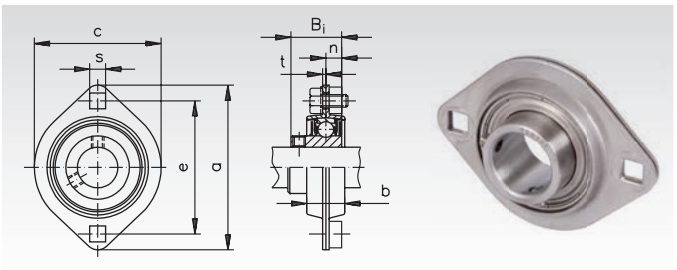

Ordering Details: e.g.: Product No. 626 995 12, Ball Flange Bearing SSBPFL 201

Product No.	SSBPFL No.	Bore mm	a mm	e mm	t mm	b mm	c mm	s mm	B_i mm	n mm	Permissible Housing Load kN	Bearing-Load Rating* dyn. C kN	stat. C_0 kN	Weight kg
626 995 12	201	12	81	63,5	2	14	59	7,1	22	6	2,65	9,6	4,8	0,19
626 995 15	202	15	81	63,5	2	14	59	7,1	22	6	2,65	9,6	4,8	0,19
626 995 17	203	17	81	63,5	2	14	59	7,1	22	6	2,65	9,6	4,8	0,19
626 995 20	204	20	90	71,5	2	16	67	9	25	7	3,09	12,9	6,7	0,24
626 995 25	205	25	95	76,0	2	18	71	9	27	7,5	3,53	14,0	7,9	0,28
626 995 30	206	30	113	90,5	2,6	19	84	11	30	8	4,90	19,5	11,3	0,38
626 995 35	207	35	123	100	2,6	20	94	11	32	8,5	6,23	25,7	15,3	0,58

* Maximum radial load if axial force = 0. Regard the housing load. The axial load rating is approx. 20% of the radial load rating.

Pillow Block Bearing Units BK, for Fixed Side

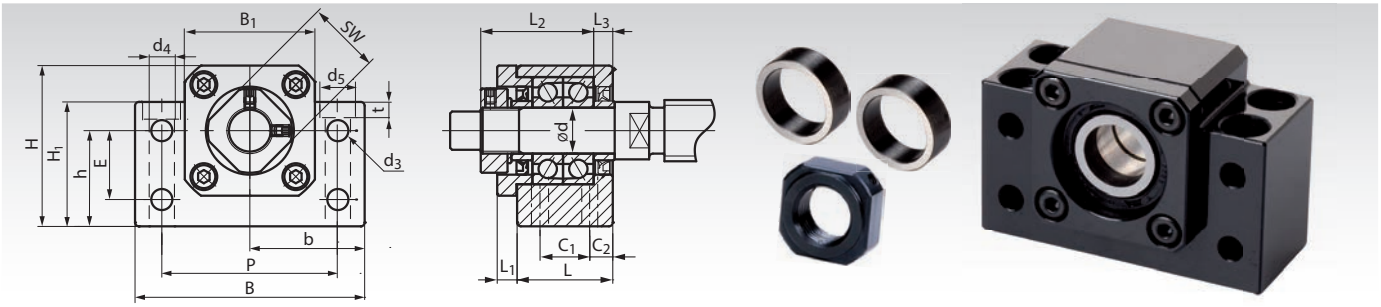

Material: Housing from steel, all surfaces machined, burnished. On request: nickel plated. Rolling bearing from bearing steel.

Ready-to-install housing bearing unit for trapezoidal and ballscrew spindle drives, for the fixed side. With two angular contact ball bearings, lightly preloaded, with seals. With 8 mounting holes.

Locknut and distance bushes are included. Due to the standard dimensions, these units can also replace parts of other suppliers.

Spindle reworking on request (see page 435).
Matching counterpart for support side: Pillow Block Bearing BF.

Ordering Details: e.g.: Product No. 642 001 10, Ball Pillow Block Bearing Unit BK 10, Bore 10mm

Product No.	Type	d mm	L mm	L_1 mm	L_2 mm	L_3 mm	B mm	H mm	$b^{\pm0,02}$ mm	$h^{\pm0,02}$ mm	B_1 mm	H_1 mm	E mm	P mm	C_1 mm	C_2 mm	d_3 mm	d_4 mm	d_5 mm	t mm	SW mm	Weight kg
642 001 10	BK 10	10	25	5	29,5	5	60	39	30	22	34	32,5	15	46	13	6	5,5	6,3	10,5	6,5	16	0,39
642 001 12	BK 12	12	25	5	29,5	5	60	42	30	25	34	32,5	18	46	13	6	5,5	6,3	10,5	1,5	19	0,41
642 001 15	BK 15	15	27	6	32	6	70	47	35	28	38	38	18	54	15	6	5,5	6,3	10,5	6,5	22	0,57
642 001 17	BK 17	17	35	9	44	7	86	63	43	39	48	55	28	68	19	8	6,6	8,7	14,0	8,6	24	1,27
642 001 20	BK 20	20	35	8	43	8	88	59	44	34	50	50	22	70	19	8	6,6	8,7	14,0	8,5	30	1,19
642 001 25	BK 25	25	42	12	54	9	106	79	53	48	62	70	33	85	22	10	9	10,7	17,5	10,8	35	2,30
642 001 30	BK 30	30	45	14	61	9	128	88	64	51	74	78	33	102	23	11	11	13,7	20	13	40	3,32
642 001 35	BK 35	35	50	14	67	12	140	95	70	52	86	79	35	114	26	12	11	13,7	20	13	50	4,33
642 001 40	BK 40	40	61	18	76	15	160	109	80	60	98	90	37	130	33	14	14	17,7	26	17,5	50	6,50

Pillow Block Bearing Units BF, for Support Side

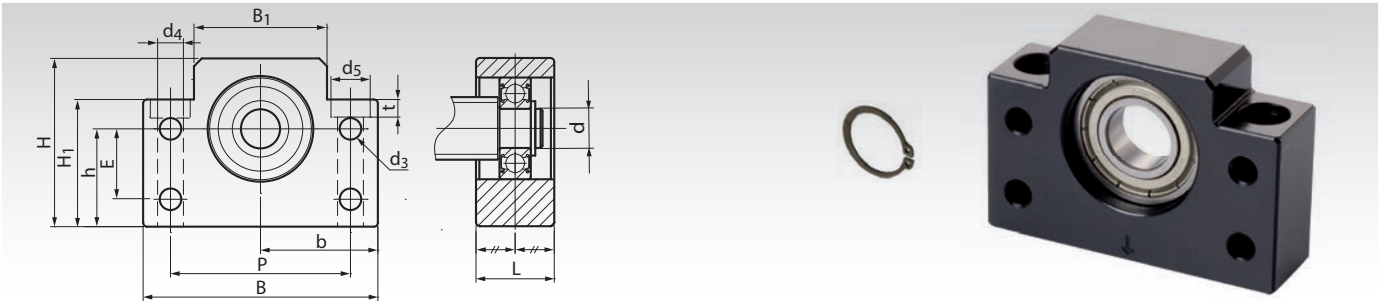

Material: Housing from steel, all surfaces machined, burnished. On request: nickel plated. Rolling bearing from bearing steel.

Ready-to-install housing bearing unit for trapezoidal and ballscrew spindle drives, for the support side. With one movable single row deep groove ball bearing with shields (2Z). With 6 mounting holes.

Retaining ring for fixing on the spindle end is included. Due to the standard dimensions, these units can also replace parts of other suppliers.

Spindle reworking on request (see page 435).
Matching counterpart for fixed side: Pillow Block Bearing BK.

Ordering Details: e.g.: Product No. 642 002 10, Ball Pillow Block Bearing Unit BF 10, Bore 8mm

Product No.	Type	d mm	L mm	B mm	H mm	$b^{\pm0,02}$ mm	$h^{\pm0,02}$ mm	B_1 mm	H_1 mm	E mm	P mm	d_3 mm	d_4 mm	d_5 mm	t mm	Weight kg
642 002 10	BF 10	8	20	60	39	30	22	34	32,5	15	46	5,5	6,3	10,8	5,0	0,29
642 002 12	BF 12	10	20	60	43	30	25	34	32,5	18	46	5,5	6,3	10,8	1,5	0,30
642 002 15	BF 15	15	20	70	48	35	28	40	38	18	54	5,5	6,3	11	6,5	0,38
642 002 17	BF 17	17	23	86	64	43	39	50	55	28	68	6,6	8,7	14	8,6	0,74
642 002 20	BF 20	20	26	88	60	44	34	52	50	22	70	6,6	8,7	14	8,6	0,76
642 002 25	BF 25	25	30	106	80	53	48	64	70	33	85	9	10,7	17,5	11	1,42
642 002 30	BF 30	30	32	128	89	64	51	76	78	33	102	11	13,7	20	13	1,97
642 002 35	BF 35	35	32	140	96	70	52	88	79	35	114	11	13,7	20	13	2,22
642 002 40	BF 40	40	37	160	110	80	60	100	90	37	130	14	17,7	26	17,5	3,27



Nickel plated on request.

Pillow Block Bearing Units EK, for Fixed Side

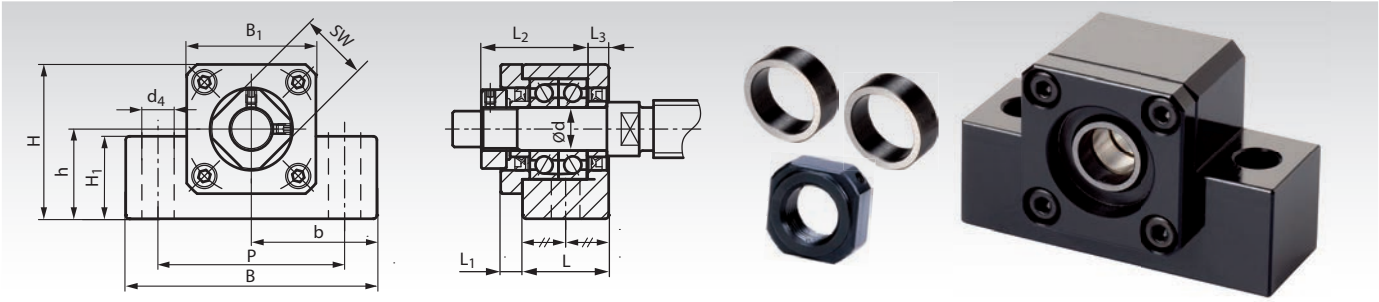

Material: Housing from steel, all surfaces machined, burnished. On request: nickel plated. Rolling bearing from bearing steel.

Ready-to-install housing bearing unit for trapezoidal and ballscrew spindle drives, for the fixed side. With two angular contact ball bearings, lightly preloaded, with seals. With 2 mounting holes.

Locknut and distance bushes are included. Due to the standard dimensions, these units can also replace parts of other suppliers.

Spindle reworking on request (see page 435).
Matching counterpart for support side: Pillow Block Bearing EF.

Ordering Details: e.g.: Product No. 642 003 06, Ball Pillow Block Bearing Unit EK 6, Bore 6mm

Product No.	Type	d mm	L mm	L_1 mm	L_2 mm	L_3 mm	B mm	H mm	$b^{\pm0,02}$ mm	$h^{\pm0,02}$ mm	B_1 mm	H_1 mm	P mm	d_4 mm	SW mm	Weight kg
642 003 06	EK 06	6	20	5,5	22	3,5	42	25	21	13	20	12	30	5,2	12	0,14
642 003 08	EK 08	8	23	7	26	4	52	32	26	17	27	16	38	6,3	14	0,24
642 003 10	EK 10	10	24	6	29,5	6	70	43	35	25	36	24	52	9	16	0,46
642 003 12	EK 12	12	24	6	29,5	6	70	43	35	25	36	24	52	9	19	0,44
642 003 15	EK 15	15	25	6	32	5	80	50	40	30	40	25	60	11	22	0,55
642 003 20	EK 20	20	42	10	50	10	95	58	47,5	30	56	25	75	11	30	1,35

Pillow Block Bearing Units EF, for Support Side

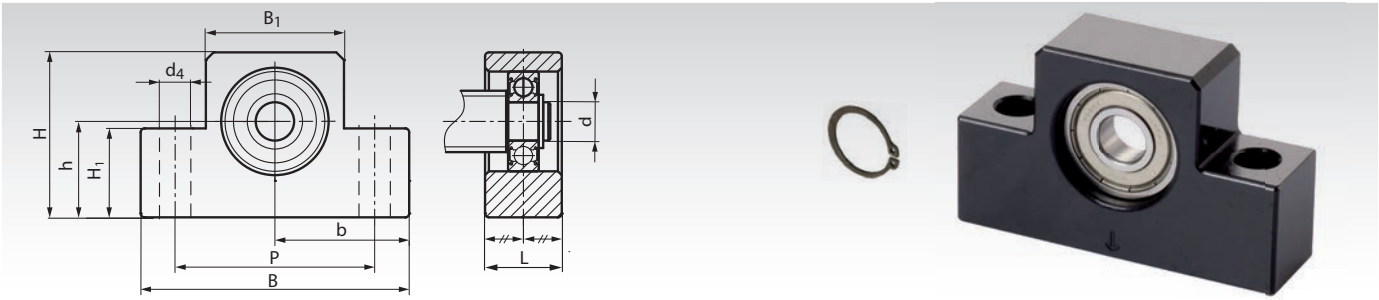

Material: Housing from steel, all surfaces machined, burnished. On request: nickel plated. Rolling bearing from bearing steel.

Ready-to-install housing bearing unit for trapezoidal and ballscrew spindle drives, for the support side. With one movable single row deep groove ball bearing with shields (2Z). With 2 mounting holes.

Retaining ring for fixing on the spindle end is included. Due to the standard dimensions, these units can also replace parts of other suppliers.

Spindle reworking on request (see page 435).
Matching counterpart for fixed side: Pillow Block Bearing EK.

Ordering Details: e.g.: Product No. 642 004 06, Ball Pillow Block Bearing Unit EF 6, Bore 6mm

Product No.	Type	d mm	L mm	B mm	H mm	$b^{\pm0,02}$ mm	$h^{\pm0,02}$ mm	B_1 mm	H_1 mm	P mm	d_4 mm	Weight kg
642 004 06	EF 06	6	12	42	25	21	13	20	12	30	5,2	0,07
642 004 08	EF 08	6	14	52	32	26	17	27	16	38	6,3	0,13
642 004 10	EF 10	8	20	70	43	35	25	36	24	52	9	0,33
642 004 12	EF 12	10	20	70	43	35	25	36	24	52	9	0,32
642 004 15	EF 15	15	20	80	49	40	30	41	25	60	9	0,38
642 004 20	EF 20	20	26	95	58	47,5	30	56	25	75	11	0,63



Nickel plated on request.

Flange Bearing Units FK, for Fixed Side

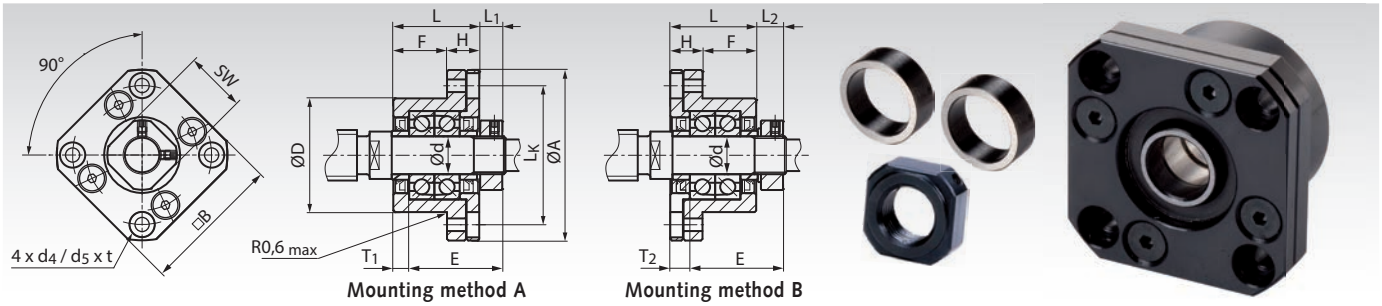

Material: Housing from steel, all surfaces machined, burnished. On request: nickel plated. Rolling bearing from bearing steel.

Ready-to-install housing bearing unit for trapezoidal and ballscrew spindle drives, for the fixed side. With two angular contact ball bearings, lightly preloaded, with seals. With 4 mounting holes.

Locknut and distance bushes are included. Due to the standard dimensions, these units can also replace parts of other suppliers.

Spindle reworking on request (see page 435).
Matching counterpart for support side: Flange Bearing FF.

Ordering Details: e.g.: Product No. 642 005 06, Flange Bearing Unit FK 6, Bore 6mm

Product No.	Type	d mm	L mm	H mm	F mm	E mm	D^{g6} mm	A mm	L_k mm	B mm	L_1 mm	T_1 mm	L_2 mm	T_2 mm	d_4 mm	d_5 mm	t mm	SW mm	Weight kg
642 005 06	FK 06	6	20	7	13	22	22	36	28	28	5,5	3,5	6,5	4,5	3,4	6	3,3	12	0,08
642 005 08	FK 08	8	23	9	14	26	28	43	35	35	7,0	4	8	5	3,4	6	3,3	14	0,15
642 005 10	FK 10	10	27	10	17	29,5	34	52	42	42	7,3	5	8,5	6	4,5	8	4	16	0,21
642 005 12	FK 12	12	27	10	17	29,5	36	54	44	44	7,3	5	8,5	6	4,5	8	4	19	0,22
642 005 15	FK 15	15	32	15	17	36	40	63	50	52	9,8	6	12	8	5,5	9,5	6	22	0,39
642 005 17	FK 17	17	45	22	23	47	50	77	62	61	11,0	9	14	12	6,6	11	10	24	0,85
642 005 20	FK 20	20	52	22	30	50	57	85	70	68	7,8	10	12	14	6,5	11	10	30	1,09
642 005 25	FK 25	25	57	27	30	60	63	98	80	79	12,8	10	20	17	9	15	13	35	1,49
642 005 30	FK 30	30	62	30	32	61	75	117	95	93	10,8	12	17	18	11	17,5	15	40	2,32

Flange Bearing Units FF, for Support Side

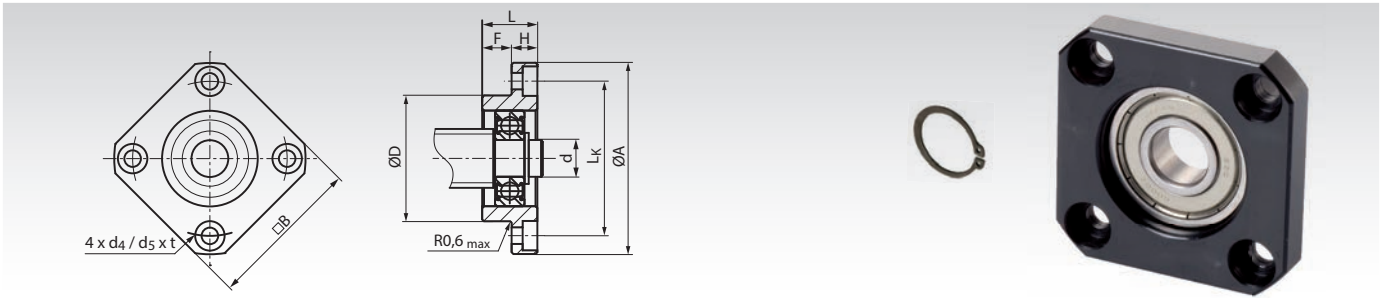

Material: Housing from steel, all surfaces machined, burnished. On request: nickel plated. Rolling bearing from bearing steel.

Ready-to-install housing bearing unit for trapezoidal and ballscrew spindle drives, for the support side. With one movable single row deep groove ball bearing with shields (2Z). With 4 mounting holes.

Retaining ring for fixing on the spindle end is included. Due to the standard dimensions, these units can also replace parts of other suppliers.

Spindle reworking on request (see page 435).
Matching counterpart for fixed side: Flange Bearing FK.

Ordering Details: e.g.: Product No. 642 006 06, Flange Bearing Unit FF 6, Bore 6mm

Product No.	Type	d mm	L mm	H mm	F mm	D^{g6} mm	A mm	L_k mm	B mm	d_4 mm	d_5 mm	t mm	Weight kg
642 006 06	FF 06	6	10	6	4	22	36	28	28	3,4	6,0	3,3	0,04
642 006 10	FF 10	8	12	7	5	28	43	35	35	3,4	6,0	3,3	0,07
642 006 12	FF 12	10	15	7	8	34	52	42	42	4,2	8	4,4	0,11
642 006 15	FF 15	15	17	9	8	40	63	50	52	5,2	9,5	5,4	0,20
642 006 17	FF 17	17	20	11	9	50	77	62	61	6,6	11	8,6	0,35
642 006 20	FF 20	20	20	11	9	57	85	70	68	6,3	11	6,5	0,27
642 006 25	FF 25	25	24	14	10	63	98	80	79	8,7	14	8,6	0,67
642 006 30	FF 30	30	27	18	9	75	117	95	93	10,7	17,5	10,8	1,07



Nickel plated on request.

Shaft Reworking and Bearing Load Data for Spindle Bearing Units BK, EK and FK (Fixed Side)

Shaft Reworking:
At ***MÄDLER®***, trapezoidal and ballscrew spindles can get reworked, fitting to the bearing units. The spindle reworking in the drawing is just a recommendation. Due to the customer´s request, the length L_5 could be shorter or longer and the shaft end could get a keyway DIN 6885.

Bearing Load Data:
The loading rates and speed limits shown in the table are the limits just for the bearings. The limits of the spindles are much lower, depending on the diameter, length and material.

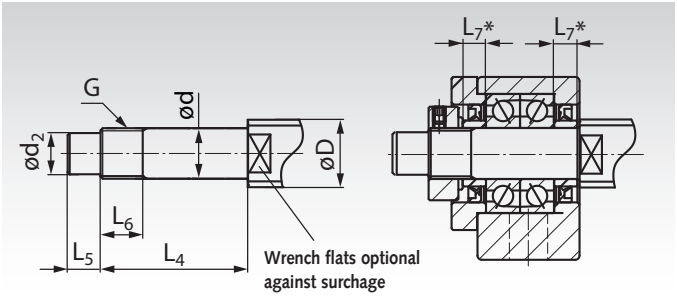

Recommendated Shaft Reworking for Fixed Side Units

Bearing-Unit Type	Spindle-Ø D KGT mm	TR mm	dg6 mm	d2h7 mm	L4±0,2 mm	L5±0,2 mm	G mm	L6±0,2 mm	L7 1) mm
EK 06 / FK 06	8	10*	6	4	28	8	M6x0,75	8	5
EK 08 / FK 08	10/12	12*/14	8	6	32	9	M8x1	10	5,5
BK 10	12/14/15	16	10	8	36	15	M10x1	16	5,5
EK 10 / FK 10	12/14/15	16	10	8	36	15	M10x1	11	5,5
BK 12	14/15/16	18	12	10	36	15	M12x1	14	5,5
EK 12 / FK 12	14/15/16	18	12	10	36	15	M12x1	11	5,5
BK 15	18/20	20*/24	15	12	40	20	M15x1	12	6
EK 15	18/20	20*/24	15	12	47	20	M15x1	13	10
FK 15	18/20	20*/24	15	12	47	20	M15x1	13	10
BK 17 / FK 17	20/25	24/28	17	15	53	23	M17x1	17	7
BK 20	25/28/30	30/36	20	17	53	25	M20x1	15	8
EK 20 / FK 20	25/28/30	30/36	20	17	62	25	M20x1	17	11
BK 25	30/32/36	36	25	20	65	30	M25x1,5	18	9
FK 25	30/32/36	36	25	20	76	30	M25x1,5	20	15
BK 30 / FK 30	36/40	36*/40	30	25	72	38	M30x1,5	25	9
BK 35	45	36*/40	35	30	81	45	M35x1,5	28	12
BK 40	50	50	40	35	93	50	M40x1,5	35	15

Bearing Load Data

Bearing Type	Load rating axial dyn.C kN	stat.C0 kN	Speed limit min-1
706 A P5	2,03	0,80	46.400
708 A P5	3,35	1,45	35.200
7000 A P5	5,0	2,34	29.440
7000 A P5	5,0	2,34	29.440
7001 A P5	5,4	2,71	25.760
7001 A P5	5,4	2,71	25.760
7002 A P5	3,2	2,36	22.080
7002 A P5	3,2	2,36	22.080
7002 A P5	3,2	2,36	22.080
7203 A P5	10,1	5,45	18.400
7004 A P5	10,3	6,10	16.560
7204 A P5	13,6	7,55	15.640
7205 A P5	15,4	9,45	13.800
7205 A P5	15,4	9,45	13.800
7206 A P5	21,3	13,6	11.040
7207 A P5	28,2	18,5	9.660
7208 A P5	33,5	23,3	8.832

1) The matching distance bushes are included in the scope of delivery of bearing units BK, EK and FK.
* A rest of the thread grooves may remain visible.

Shaft Reworking and Bearing Load Data for Spindle Bearing Units BF, EF and FF (Support Side)

Shaft Reworking:
At ***MÄDLER®***, trapezoidal and ballscrew spindles can get reworked, fitting to the bearing units. The spindle reworking in the drawing is just a recommendation. Due to the customer´s request, the length L_8 could be shorter or longer and the shaft end could get a keyway DIN 6885.

Bearing Load Data:
The loading rates and speed limits shown in the table are the limits just for the bearings. The limits of the spindles are much lower, depending on the diameter, length and material.

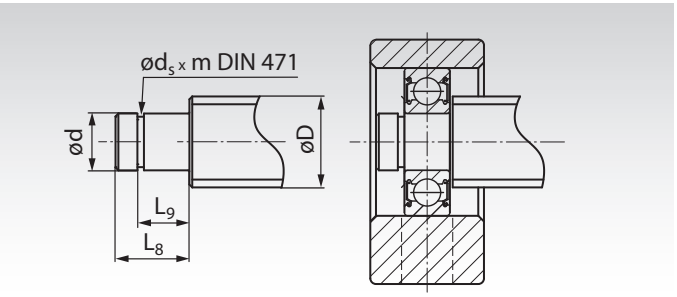

Recommendated Shaft Reworking for Support Side Units

Bearing-Unit Type	Spindle-Ø D KGT mm	TR mm	dg6 mm	ds-0,15 mm	L8±0,2 mm	L9±0,2 mm	mH13 mm	DIN 471 1) mm
EF 06 / FF 06	8	10*	6	5,7	9	6,8	0,8	6
EF 08	10/12	10*/12	6	5,7	9	6,8	0,8	6
BF 10 / EF 10 / FF 10	12/14/15	12*/14	8	7,6	10	7,9	0,9	8
BF 12 / EF 12 / FF 12	14/15/16	16/18	10	9,6	11	9,15	1,15	10
BF 15 / EF 15 / FF 15	18/20	20*/24	15	14,3	13	10,15	1,15	15
BF 17 / FF 17	20/25	24/28	17	16,2	16	13,15	1,15	17
BF 20	25/28/30	30/36	20	19,0	16	13,15	1,15	20
EF 20 / FF 20	25/28/30	30/36	20	19,0	19	15,35	1,35	20
BF 25 / FF 25	30/32/36	36	25	23,9	20	16,35	1,35	25
BF 30 / FF 30	36/40	36*/40	30	28,6	21	17,75	1,75	30
BF 35	40/45	36/40	35	33	22	18,75	1,75	35
BF 40	50	50	40	38	23	19,95	1,95	40

Bearing Load Data

Bearing Type	Load rating axial dyn.C kN	stat.C0 kN	Speed limit min-1
606-2Z	2,3	0,8	37.000
606-2Z	2,3	0,8	37.000
608-2Z	3,3	1,4	34.000
6000-2Z	4,6	2,0	31.000
6002-2Z	5,6	2,8	23.000
6203-2Z	9,6	4,8	17.000
6004-2Z	9,4	5,0	15.000
6204-2Z	12,8	6,7	14.000
6205-2Z	14,0	7,9	12.000
6206-2Z	19,5	11,3	9.500
6207-2Z	16,0	10,4	9.000
6208-2Z	29,5	18,0	8.000

1) The retaining ring DIN 471 is included in the scope of delivery of bearing units BF, EF and FF.
* A rest of the thread grooves may remain visible.

Single Row Deep Groove Ball Bearings SKF®, inner diameter 3 - 17 mm

Material: Bearing steel.

- Standard ball bearings in premium-quality.
- Most common bearing type.
- Usable for high speed.
- Insensitive in use and maintenance.
- On choice: Open, with friction-free metal shields 2Z (= ZZ) or with contacting rubber NBR seals 2RS1 / 2RSH.

Temperature range: -30°C to +90°C (for short time up to +110°C).
Clearance CN: Normal bearing play. **Clearance C3:** Greater play.

Other versions or other bearing types on request.



Orderung Details: e.g.: Product No., quantity

Product No. Clearance CN	Product No. Clearance C3	Main dimensions d mm	D mm	B mm	Version	Load rating radial dyn.C kN	stat.C_0 kN	P_u* kN	Speed base min^{-1}	Speed limit min^{-1}	Weight g
623-2Z-SKF	623-2Z-C3-SKF	3	10	4	shielded on both sides	0,54	0,18	0,007	130.000	60.000	1,5
624-2Z-SKF	624-2Z-C3-SKF	4	13	5	shielded on both sides	0,94	0,29	0,012	110.000	53.000	3,1
625-SKF	-	5	16	5	open	1,14	0,38	0,016	95.000	60.000	5
625-2Z-SKF	625-2Z-C3-SKF	5	16	5	shielded on both sides	1,14	0,38	0,016	95.000	48.000	5
625-2RS1-SKF	-	5	16	5	sealed on both sides	1,14	0,38	0,016	95.000	48.000	5
626-SKF	626-C3-SKF	6	19	6	open	2,34	0,95	0,04	80.000	50.000	8,4
626-2Z-SKF	626-2Z-C3-SKF	6	19	6	shielded on both sides	2,34	0,95	0,04	80.000	40.000	8,4
626-2RSH-SKF	626-2RSH-C3-SKF	6	19	6	sealed on both sides	2,34	0,95	0,04	-	24.000	8,4
607-2Z-SKF	607-2Z-C3-SKF	7	19	6	shielded on both sides	2,34	0,95	0,04	85.000	43.000	7,5
607-2RSH-SKF	607-2RSH-C3-SKF	7	19	6	sealed on both sides	2,34	0,95	0,04	-	24.000	7,5
627-2Z-SKF	627-2Z-C3-SKF	7	22	7	shielded on both sides	3,45	1,37	0,057	70.000	36.000	13
627-2RSH-SKF	627-2RSH-C3-SKF	7	22	7	sealed on both sides	3,45	1,37	0,057	-	22.000	12
608-SKF	-	8	22	7	open	3,45	1,37	0,057	75.000	48.000	12
608-2Z-SKF	608-2Z-C3-SKF	8	22	7	shielded on both sides	3,45	1,37	0,057	75.000	38.000	12
608-2RSH-SKF	608-2RSH-C3-SKF	8	22	7	sealed on both sides	3,45	1,37	0,057	-	22.000	12
609-2Z-SKF	609-2Z-C3-SKF	9	24	7	shielded on both sides	3,9	1,66	0,071	70.000	34.000	14
609-2RSH-SKF	609-2RSH-C3-SKF	9	24	7	sealed on both sides	3,9	1,66	0,071	-	19.000	14
629-2Z-SKF	629-2Z-C3-SKF	9	26	8	shielded on both sides	4,75	1,96	0,083	60.000	30.000	20
629-2RSH-SKF	629-2RSH-C3-SKF	9	26	8	sealed on both sides	4,75	1,96	0,083	-	19.000	20
61800-SKF	-	10	19	5	open	1,38	0,59	0,025	80.000	48.000	5,5
61800-2Z-SKF	-	10	19	5	shielded on both sides	1,38	0,59	0,025	80.000	38.000	5,5
61800-2RS1-SKF	-	10	19	5	sealed on both sides	1,38	0,59	0,025	-	22.000	5,5
6000-SKF	6000-C3-SKF	10	26	8	open	4,75	1,96	0,083	67.000	40.000	19
6000-2Z-SKF	6000-2Z-C3-SKF	10	26	8	shielded on both sides	4,75	1,96	0,083	67.000	34.000	19
6000-2RSH-SKF	6000-2RSH-C3-SKF	10	26	8	sealed on both sides	4,75	1,96	0,083	-	19.000	19
6200-SKF	6200-C3-SKF	10	30	9	open	5,4	2,36	0,1	56.000	34.000	32
6200-2Z-SKF	6200-2Z-C3-SKF	10	30	9	shielded on both sides	5,4	2,36	0,1	56.000	28.000	32
6200-2RSH-SKF	6200-2RSH-C3-SKF	10	30	9	sealed on both sides	5,4	2,36	0,1	-	17.000	32
6300-2Z-SKF	6300-2Z-C3-SKF	10	35	11	shielded on both sides	8,52	3,4	0,143	50.000	26.000	53
6300-2RSH-SKF	6300-2RSH-C3-SKF	10	35	11	sealed on both sides	8,52	3,4	0,143	-	15.000	53
61801-SKF	-	12	21	5	open	1,43	0,67	0,028	70.000	43.000	6,3
61801-2Z-SKF	-	12	21	5	shielded on both sides	1,43	0,67	0,028	70.000	36.000	6,3
61801-2RS1-SKF	-	12	21	5	sealed on both sides	1,43	0,67	0,028	-	20.000	6,3
6001-SKF	6001-C3-SKF	12	28	8	open	5,4	2,36	0,1	60.000	38.000	22
6001-2Z-SKF	6001-2Z-C3-SKF	12	28	8	shielded on both sides	5,4	2,36	0,1	60.000	30.000	22
6001-2RSH-SKF	6001-2RSH-C3-SKF	12	28	8	sealed on both sides	5,4	2,36	0,1	-	17.000	22
6201-SKF	6201-C3-SKF	12	32	10	open	7,28	3,1	0,132	50.000	32.000	37
6201-2Z-SKF	6201-2Z-C3-SKF	12	32	10	shielded on both sides	7,28	3,1	0,132	50.000	26.000	37
6201-2RSH-SKF	6201-2RSH-C3-SKF	12	32	10	sealed on both sides	7,28	3,1	0,132	-	15.000	37
6301-2Z-SKF	6301-2Z-C3-SKF	12	37	12	shielded on both sides	10,1	4,15	0,176	45.000	22.000	60
6301-2RSH-SKF	6301-2RSH-C3-SKF	12	37	12	sealed on both sides	10,1	4,15	0,176	-	14.000	60
61802-2Z-SKF	-	15	24	5	shielded on both sides	1,56	0,8	0,034	60.000	30.000	7,4
61802-2RS1-SKF	-	15	24	5	sealed on both sides	1,56	0,8	0,034	-	17.000	7,4
6002-SKF	6002-C3-SKF	15	32	9	open	5,85	2,85	0,12	50.000	32.000	30
6002-2Z-SKF	6002-2Z-C3-SKF	15	32	9	shielded on both sides	5,85	2,85	0,12	50.000	26.000	30
6002-2RSH-SKF	6002-2RSH-C3-SKF	15	32	9	sealed on both sides	5,85	2,85	0,12	-	14.000	30
6202-SKF	6202-C3-SKF	15	35	11	open	8,06	3,75	0,16	43.000	28.000	45
6202-2Z-SKF	6202-2Z-C3-SKF	15	35	11	shielded on both sides	8,06	3,75	0,16	43.000	22.000	45
6202-2RSH-SKF	6202-2RSH-C3-SKF	15	35	11	sealed on both sides	8,06	3,75	0,16	-	13.000	45
6302-SKF	6302-C3-SKF	15	42	13	open	11,9	5,4	0,228	38.000	24.000	82
6302-2Z-SKF	6302-2Z-C3-SKF	15	42	13	shielded on both sides	11,9	5,4	0,228	38.000	19.000	82
6302-2RSH-SKF	6302-2RSH-C3-SKF	15	42	13	sealed on both sides	11,9	5,4	0,228	-	12.000	82
61803-2Z-SKF	-	17	26	5	shielded on both sides	1,68	0,93	0,039	56.000	28.000	8,2
61803-2RS1-SKF	-	17	26	5	sealed on both sides	1,68	0,93	0,039	-	16.000	8,2
6003-SKF	6003-C3-SKF	17	35	10	open	6,37	3,25	0,137	45.000	28.000	39
6003-2Z-SKF	6003-2Z-C3-SKF	17	35	10	shielded on both sides	6,37	3,25	0,137	45.000	22.000	39
6003-2RSH-SKF	6003-2RSH-C3-SKF	17	35	10	sealed on both sides	6,37	3,25	0,137	-	13.000	39
6203-SKF	6203-C3-SKF	17	40	12	open	9,95	4,75	0,2	38.000	24.000	65
6203-2Z-SKF	6203-2Z-C3-SKF	17	40	12	shielded on both sides	9,95	4,75	0,2	38.000	19.000	65
6203-2RSH-SKF	6203-2RSH-C3-SKF	17	40	12	sealed on both sides	9,95	4,75	0,2	-	12.000	65
6303-SKF	6303-C3-SKF	17	47	14	open	14,3	6,55	0,275	34.000	22.000	120
6303-2Z-SKF	6303-2Z-C3-SKF	17	47	14	shielded on both sides	14,3	6,55	0,275	34.000	17.000	120
6303-2RSH-SKF	6303-2RSH-C3-SKF	17	47	14	sealed on both sides	14,3	6,55	0,275	-	11.000	120

* Fatigue load limit.

Single Row Deep Groove Ball Bearings SKF®, inner diameter 20 - 50 mm

Material: Bearing steel.

- Standard ball bearings in premium-quality.
- Most common bearing type.
- Usable for high speed.
- Insensitive in use and maintenance.
- On choice: Open, with friction-free metal shields 2Z (= ZZ) or with contacting rubber NBR seals 2RS1 / 2RSH.

Temperature range: -30°C to +90°C (for short time up to +110°C).
Clearance CN: Normal bearing play. **Clearance C3:** Greater play.

Other versions or other bearing types on request.



Orderung Details: e.g.: product No., quantity

Product No. Clearance CN	Product No. Clearance C3	Main dimensions d mm	D mm	B mm	Version	Load rating radial dyn.C kN	stat.C_0 kN	P_u* kN	Speed base min^{-1}	Speed limit min^{-1}	Weight g
6004-SKF	6004-C3-SKF	20	42	12	open	9,95	5	0,212	38.000	24.000	69
6004-2Z-SKF	6004-2Z-C3-SKF	20	42	12	shielded on both sides	9,95	5	0,212	38.000	19.000	69
6004-2RSH-SKF	6004-2RSH-C3-SKF	20	42	12	sealed on both sides	9,95	5	0,212	-	11.000	69
6204-SKF	6204-C3-SKF	20	47	14	open	13,5	6,55	0,28	32.000	20.000	110
6204-2Z-SKF	6204-2Z-C3-SKF	20	47	14	shielded on both sides	13,5	6,55	0,28	32.000	17.000	110
6204-2RSH-SKF	6204-2RSH-C3-SKF	20	47	14	sealed on both sides	13,5	6,55	0,28	-	10.000	110
6304-SKF	6304-C3-SKF	20	52	15	open	16,8	7,8	0,335	30.000	19.000	140
6304-2Z-SKF	6304-2Z-C3-SKF	20	52	15	shielded on both sides	16,8	7,8	0,335	30.000	15.000	140
6304-2RSH-SKF	6304-2RSH-C3-SKF	20	52	15	sealed on both sides	16,8	7,8	0,335	-	9.500	140
6005-SKF	6005-C3-SKF	25	47	12	open	11,9	6,55	0,275	32.000	20.000	80
6005-2Z-SKF	6005-2Z-C3-SKF	25	47	12	shielded on both sides	11,9	6,55	0,275	32.000	16.000	80
6005-2RSH-SKF	6005-2RSH-C3-SKF	25	47	12	sealed on both sides	11,9	6,55	0,275	-	9.500	80
6205-SKF	6205-C3-SKF	25	52	15	open	14,8	7,8	0,335	28.000	18.000	130
6205-2Z-SKF	6205-2Z-C3-SKF	25	52	15	shielded on both sides	14,8	7,8	0,335	28.000	14.000	130
6205-2RSH-SKF	6205-2RSH-C3-SKF	25	52	15	sealed on both sides	14,8	7,8	0,335	-	8.500	130
6305-SKF	6305-C3-SKF	25	62	17	open	23,4	11,6	0,49	24.000	16.000	230
6305-2Z-SKF	6305-C3-SKF	25	62	17	shielded on both sides	23,4	11,6	0,49	24.000	13.000	230
6305-2RS1-SKF	6305-2RS1-C3-SKF	25	62	17	sealed on both sides	23,4	11,6	0,49	-	7.500	230
6006-SKF	6006-C3-SKF	30	55	13	open	13,8	8,3	0,355	28.000	17.000	120
6006-2Z-SKF	6006-2Z-C3-SKF	30	55	13	shielded on both sides	13,8	8,3	0,355	28.000	14.000	120
6006-2RS1-SKF	6006-2RS1-C3-SKF	30	55	13	sealed on both sides	13,8	8,3	0,355	-	8.000	120
6206-SKF	6206-C3-SKF	30	62	16	open	20,3	11,2	0,475	24.000	15.000	200
6206-2Z-SKF	6206-2Z-C3-SKF	30	62	16	shielded on both sides	20,3	11,2	0,475	24.000	12.000	200
6206-2RS1-SKF	6206-2RS1-C3-SKF	30	62	16	sealed on both sides	20,3	11,2	0,475	-	7.500	200
6306-SKF	6306-C3-SKF	30	72	19	open	29,6	16	0,67	20.000	13.000	350
6306-2Z-SKF	6306-2Z-C3-SKF	30	72	19	shielded on both sides	29,6	16	0,67	20.000	11.000	350
6306-2RS1-SKF	6306-2RS1-C3-SKF	30	72	19	sealed on both sides	29,6	16	0,67	-	6.300	350
6007-SKF	6007-C3-SKF	35	62	14	open	16,8	10,2	0,44	24.000	15.000	160
6007-2Z-SKF	6007-2Z-C3-SKF	35	62	14	shielded on both sides	16,8	10,2	0,44	24.000	12.000	160
6007-2RS1-SKF	6007-2RS1-C3-SKF	35	62	14	sealed on both sides	16,8	10,2	0,44	-	7.000	160
6207-SKF	6207-C3-SKF	35	72	17	open	27	15,3	0,66	20.000	13.000	290
6207-2Z-SKF	6207-2Z-C3-SKF	35	72	17	shielded on both sides	27	15,3	0,66	20.000	10.000	290
6207-2RS1-SKF	6207-2RS1-C3-SKF	35	72	17	sealed on both sides	27	15,3	0,66	-	6.300	290
6307-SKF	6307-C3-SKF	35	80	21	open	35,1	19	0,82	19.000	12.000	460
6307-2Z-SKF	6307-2Z-C3-SKF	35	80	21	shielded on both sides	35,1	19	0,82	19.000	9.500	460
6307-2RS1-SKF	6307-2RS1-C3-SKF	35	80	21	sealed on both sides	35,1	19	0,82	-	6.000	460
6008-SKF	6008-C3-SKF	40	68	15	open	17,8	11,6	0,49	22.000	14.000	190
6008-2Z-SKF	6008-2Z-C3-SKF	40	68	15	shielded on both sides	17,8	11,6	0,49	22.000	11.000	190
6008-2RS1-SKF	6008-2RS1-C3-SKF	40	68	15	sealed on both sides	17,8	11,6	0,49	-	6.300	190
6208-SKF	6208-C3-SKF	40	80	18	open	32,5	19	0,8	18.000	11.000	370
6208-2Z-SKF	6208-2Z-C3-SKF	40	80	18	shielded on both sides	32,5	19	0,8	18.000	9.000	370
6208-2RS1-SKF	6208-2RS1-C3-SKF	40	80	18	sealed on both sides	32,5	19	0,8	-	5.600	370
6308-SKF	6308-C3-SKF	40	90	23	open	42,3	24	1,02	17.000	11.000	630
6308-2Z-SKF	6308-2Z-C3-SKF	40	90	23	shielded on both sides	42,3	24	1,02	17.000	8.500	630
6308-2RS1-SKF	6308-2RS1-C3-SKF	40	90	23	sealed on both sides	42,3	24	1,02	-	5.000	630
6009-SKF	6009-C3-SKF	45	75	16	open	22,1	14,6	0,64	20.000	12.000	250
6009-2Z-SKF	6009-2Z-C3-SKF	45	75	16	shielded on both sides	22,1	14,6	0,64	20.000	10.000	250
6009-2RS1-SKF	6009-2RS1-C3-SKF	45	75	16	sealed on both sides	22,1	14,6	0,64	-	5.600	250
6209-SKF	6209-C3-SKF	45	85	19	open	35,1	21,6	0,92	17.000	11.000	410
6209-2Z-SKF	6209-2Z-C3-SKF	45	85	19	shielded on both sides	35,1	21,6	0,92	17.000	8.500	410
6209-2RS1-SKF	6209-2RS1-C3-SKF	45	85	19	sealed on both sides	35,1	21,6	0,92	-	5.000	410
6309-SKF	6309-C3-SKF	45	100	25	open	55,3	31,5	1,34	15.000	9.500	830
6309-2Z-SKF	6309-2Z-C3-SKF	45	100	25	shielded on both sides	55,3	31,5	1,34	15.000	7.500	830
6309-2RS1-SKF	6309-2RS1-C3-SKF	45	100	25	sealed on both sides	55,3	31,5	1,34	-	4.500	830
6010-SKF	6010-C3-SKF	50	80	16	open	22,9	16	0,71	18.000	11.000	260
6010-2Z-SKF	6010-2Z-C3-SKF	50	80	16	shielded on both sides	22,9	16	0,71	18.000	9.000	260
6010-2RS1-SKF	6010-2RS1-C3-SKF	50	80	16	sealed on both sides	22,9	16	0,71	-	5.000	260
6210-SKF	6210-C3-SKF	50	90	20	open	37,1	23,2	0,98	15.000	10.000	460
6210-2Z-SKF	6210-2Z-C3-SKF	50	90	20	shielded on both sides	37,1	23,2	0,98	15.000	8.000	460
6210-2RS1-SKF	6210-2RS1-C3-SKF	50	90	20	sealed on both sides	37,1	23,2	0,98	-	4.800	460
6310-SKF	6310-C3-SKF	50	110	27	open	65	38	1,6	13.000	8.500	1050
6310-2Z-SKF	6310-2Z-C3-SKF	50	110	27	shielded on both sides	65	38	1,6	13.000	6.700	1050
6310-2RS1-SKF	6310-2RS1-C3-SKF	50	110	27	sealed on both sides	65	38	1,6	-	4.300	1050

* Fatigue load limit.

Single Row Deep Groove Ball Bearings *MÄDLER*®, inner diameter 3 - 17 mm

Material: Bearing steel.

- Standard ball bearings in high quality.
- Most common bearing type.
- Usable for high speed.
- Insensitive in use and maintenance.
- On choice: With friction-free metal shields ZZ (= 2Z) or with contacting rubber seals 2RS.

Temperature range: -30°C to +90°C (for short time up to +110°C).
Clearance CN: Normal bearing play. **Clearance C3:** Greater play.

Other versions or other bearing types on request.



Orderung Details: e.g.: Product No., quantity

Product No. Clearance CN	Product No. Clearance C3	Main dimensions d mm	D mm	B mm	Version	Load rating radial dyn.C kN	stat.C_0 kN	Speed limit min^{-1}	Weight g
623-ZZ-MAE	623-ZZ-C3-MAE	3	10	4	shielded on both sides	0,63	0,22	50.000	1,7
624-ZZ-MAE	624-ZZ-C3-MAE	4	13	5	shielded on both sides	1,30	0,49	40.000	3,0
625-ZZ-MAE	625-ZZ-C3-MAE	5	16	5	shielded on both sides	1,73	0,67	36.000	4,9
625-2RS-MAE	625-2RS-C3-MAE	5	16	5	sealed on both sides	1,73	0,67	25.000	4,9
626-ZZ-MAE	626-ZZ-C3-MAE	6	19	6	shielded on both sides	2,34	0,89	32.000	7,9
626-2RS-MAE	626-2RS-C3-MAE	6	19	6	sealed on both sides	2,34	0,89	22.000	7,9
607-ZZ-MAE	607-ZZ-C3-MAE	7	19	6	shielded on both sides	2,34	0,89	36.000	7,5
607-2RS-MAE	607-2RS-C3-MAE	7	19	6	sealed on both sides	2,34	0,89	22.000	7,5
627-ZZ-MAE	-	7	22	7	shielded on both sides	3,30	1,37	30.000	12,9
627-2RS-MAE	-	7	22	7	sealed on both sides	3,30	1,37	20.000	12,9
608-ZZ-MAE	608-ZZ-C3-MAE	8	22	7	shielded on both sides	3,30	1,37	34.000	12,2
608-2RS-MAE	608-2RS-C3-MAE	8	22	7	sealed on both sides	3,30	1,37	20.000	12,2
609-ZZ-MAE	-	9	24	7	shielded on both sides	3,35	1,43	32.000	14,7
609-2RS-MAE	-	9	24	7	sealed on both sides	3,35	1,43	19.000	14,7
629-ZZ-MAE	-	9	26	8	shielded on both sides	4,55	1,97	28.000	19,3
629-2RS-MAE	-	9	26	8	sealed on both sides	4,55	1,97	18.000	19,3
61800-ZZ-MAE	61800-ZZ-C3-MAE	10	19	5	shielded on both sides	1,72	0,84	24.000	5,5
61800-2RS-MAE	61800-2RS-C3-MAE	10	19	5	sealed on both sides	1,72	0,84	17.000	5,5
61900-ZZ-MAE	61900-ZZ-C3-MAE	10	22	6	shielded on both sides	2,70	1,27	22.000	10
61900-2RS-MAE	61900-2RS-C3-MAE	10	22	6	sealed on both sides	2,70	1,27	15.500	10
6000-ZZ-MAE	6000-ZZ-C3-MAE	10	26	8	shielded on both sides	4,55	1,97	31.000	19
6000-2RS-MAE	6000-2RS-C3-MAE	10	26	8	sealed on both sides	4,55	1,97	19.000	19
6200-ZZ-MAE	6200-ZZ-C3-MAE	10	30	9	shielded on both sides	5,10	2,39	24.000	32
6200-2RS-MAE	6200-2RS-C3-MAE	10	30	9	sealed on both sides	5,10	2,39	17.000	32
6300-ZZ-MAE	-	10	35	11	shielded on both sides	8,10	3,47	22.000	53
6300-2RS-MAE	-	10	35	11	sealed on both sides	8,10	3,47	15.000	53
61801-ZZ-MAE	61801-ZZ-C3-MAE	12	21	5	shielded on both sides	1,92	1,04	20.000	6,3
61801-2RS-MAE	61801-2RS-C3-MAE	12	21	5	sealed on both sides	1,92	1,04	14.000	6,3
61901-ZZ-MAE	-	12	24	6	shielded on both sides	2,89	1,46	20.000	10
61901-2RS-MAE	-	12	24	6	sealed on both sides	2,89	1,46	14.000	10
6001-ZZ-MAE	6001-ZZ-C3-MAE	12	28	8	shielded on both sides	5,10	2,84	27.000	22
6001-2RS-MAE	6001-2RS-C3-MAE	12	28	8	sealed on both sides	5,10	2,84	17.000	22
6201-ZZ-MAE	6201-ZZ-C3-MAE	12	32	10	shielded on both sides	6,80	3,06	22.000	37
6201-2RS-MAE	6201-2RS-C3-MAE	12	32	10	sealed on both sides	6,80	3,06	15.000	37
6301-ZZ-MAE	-	12	37	12	shielded on both sides	9,70	5,09	20.000	60
6301-2RS-MAE	-	12	37	12	sealed on both sides	9,70	5,09	14.000	60
61802-ZZ-MAE	61802-ZZ-C3-MAE	15	24	5	shielded on both sides	2,07	1,26	17.000	7,4
61802-2RS-MAE	61802-2RS-C3-MAE	15	24	5	sealed on both sides	2,07	1,26	12.000	7,4
61902-ZZ-MAE	-	15	28	7	shielded on both sides	4,35	2,26	17.000	20
61902-2RS-MAE	-	15	28	7	sealed on both sides	4,35	2,26	12.000	20
6002-ZZ-MAE	6002-ZZ-C3-MAE	15	32	9	shielded on both sides	5,60	2,84	23.000	30
6002-2RS-MAE	6002-2RS-C3-MAE	15	32	9	sealed on both sides	5,60	2,84	14.000	30
6202-ZZ-MAE	6202-ZZ-C3-MAE	15	35	11	shielded on both sides	7,65	3,72	20.000	45
6202-2RS-MAE	6202-2RS-C3-MAE	15	35	11	sealed on both sides	7,65	3,72	12.000	45
6302-ZZ-MAE	-	15	42	13	shielded on both sides	11,40	5,43	17.000	82
6302-2RS-MAE	-	15	42	13	sealed on both sides	11,40	5,43	12.000	82
61803-ZZ-MAE	-	17	26	5	shielded on both sides	2,63	1,57	15.000	8,2
61803-2RS-MAE	-	17	26	5	sealed on both sides	2,63	1,57	10.500	8,2
61903-ZZ-MAE	-	17	30	7	shielded on both sides	4,60	2,55	15.000	20
61903-2RS-MAE	-	17	30	7	sealed on both sides	4,60	2,55	10.500	20
6003-ZZ-MAE	6003-ZZ-C3-MAE	17	35	10	shielded on both sides	6,00	3,25	21.000	39
6003-2RS-MAE	6003-2RS-C3-MAE	17	35	10	sealed on both sides	6,00	3,25	13.000	39
6203-ZZ-MAE	6203-ZZ-C3-MAE	17	40	12	shielded on both sides	9,55	4,79	17.000	65
6203-2RS-MAE	6203-2RS-C3-MAE	17	40	12	sealed on both sides	9,55	4,79	12.000	65
6303-ZZ-MAE	-	17	47	14	shielded on both sides	13,60	6,58	15.000	120

Single Row Deep Groove Ball Bearings *MÄDLER*®, inner diameter 20 - 50 mm

Material: Bearing steel.

- Standard ball bearings in high quality.
- Most common bearing type.
- Usable for high speed.
- Insensitive in use and maintenance.
- On choice: With friction-free metal shields ZZ (= 2Z) or with contacting rubber seals 2RS.

Temperature range: -30°C to +90°C (for short time up to +110°C).
Clearance CN: Normal bearing play. **Clearance C3:** Greater play.

Other versions or other bearing types on request.



Orderung Details: e.g.: Product No., quantity

Product No. Clearance CN	Product No. Clearance C3	Main dimensions d mm	D mm	B mm	Version	Load rating radial dyn.C kN	stat.C_0 kN	Speed limit min^{-1}	Weight g
61804-ZZ-MAE	**61804-ZZ-C3-MAE**	20	32	7	shielded on both sides	4,00	2,47	13.000	20
61804-2RS-MAE	**61804-2RS-C3-MAE**	20	32	7	sealed on both sides	4,00	2,47	9.100	20
61904-ZZ-MAE	-	20	37	9	shielded on both sides	6,40	3,70	12.000	40
61904-2RS-MAE	-	20	37	9	sealed on both sides	6,40	3,70	8.400	40
6004-ZZ-MAE	**6004-ZZ-C3-MAE**	20	42	12	shielded on both sides	9,40	5,03	15.000	69
6004-2RS-MAE	**6004-2RS-C3-MAE**	20	42	12	sealed on both sides	9,40	5,03	11.000	69
6204-ZZ-MAE	**6204-ZZ-C3-MAE**	20	47	14	shielded on both sides	12,8	6,65	14.000	110
6204-2RS-MAE	**6204-2RS-C3-MAE**	20	47	14	sealed on both sides	12,8	6,65	10.000	110
6304-ZZ-MAE	**6304-ZZ-C3-MAE**	20	52	15	shielded on both sides	15,9	7,88	13.000	140
6304-2RS-MAE	**6304-2RS-C3-MAE**	20	52	15	sealed on both sides	15,9	7,88	9.500	140
61805-ZZ-MAE	-	25	37	7	shielded on both sides	4,50	3,15	10.000	20
61805-2RS-MAE	-	25	37	7	sealed on both sides	4,50	3,15	7.000	20
61905-ZZ-MAE	-	25	42	9	shielded on both sides	7,05	4,55	10.000	50
61905-2RS-MAE	-	25	42	9	sealed on both sides	7,05	4,55	7.000	50
6005-ZZ-MAE	**6005-ZZ-C3-MAE**	25	47	12	shielded on both sides	10,1	5,85	13.000	80
6005-2RS-MAE	**6005-2RS-C3-MAE**	25	47	12	sealed on both sides	10,1	5,85	9.500	80
6205-ZZ-MAE	**6205-ZZ-C3-MAE**	25	52	15	shielded on both sides	14,0	7,88	12.000	130
6205-2RS-MAE	**6205-2RS-C3-MAE**	25	52	15	sealed on both sides	14,0	7,88	8.400	130
6305-ZZ-MAE	-	25	62	17	shielded on both sides	20,6	11,5	10.000	230
6305-2RS-MAE	-	25	62	17	sealed on both sides	20,6	11,5	7.000	230
61806-ZZ-MAE	-	30	42	7	shielded on both sides	4,70	3,65	9.000	30
61806-2RS-MAE	-	30	42	7	sealed on both sides	4,70	3,65	6.300	30
61906-ZZ-MAE	-	30	47	9	shielded on both sides	7,25	5,00	8.500	50
61906-2RS-MAE	-	30	47	9	sealed on both sides	7,25	5,00	6.000	50
6006-ZZ-MAE	-	30	55	13	shielded on both sides	13,2	8,30	10.000	120
6006-2RS-MAE	-	30	55	13	sealed on both sides	13,2	8,30	7.000	120
6206-ZZ-MAE	-	30	62	16	shielded on both sides	19,5	11,3	9.500	200
6206-2RS-MAE	-	30	62	16	sealed on both sides	19,5	11,3	6.500	200
6306-2RS-MAE	-	30	72	19	sealed on both sides	26,7	15,2	6.500	350
61907-ZZ-MAE	-	35	55	10	shielded on both sides	10,6	7,25	7.500	80
61907-2RS-MAE	-	35	55	10	sealed on both sides	10,6	7,25	5.300	80
6007-ZZ-MAE	-	35	62	14	shielded on both sides	16,0	10,4	9.000	160
6007-2RS-MAE	-	35	62	14	sealed on both sides	16,0	10,4	6.300	160
6207-ZZ-MAE	-	35	72	17	shielded on both sides	25,7	15,2	8.500	290
6207-2RS-MAE	-	35	72	17	sealed on both sides	25,7	15,2	6.000	290
6307-2RS-MAE	-	35	80	21	sealed on both sides	33,5	19,2	6.000	460
61908-ZZ-MAE	-	40	62	12	shielded on both sides	13,7	10,0	6.300	120
61908-2RS-MAE	-	40	62	12	sealed on both sides	13,7	10,0	4.410	120
6008-ZZ-MAE	-	40	68	15	shielded on both sides	16,8	11,8	8.500	190
6008-2RS-MAE	-	40	68	15	sealed on both sides	16,8	11,8	6.300	190
6208-ZZ-MAE	-	40	80	18	shielded on both sides	29,5	18,0	8.000	370
6208-2RS-MAE	-	40	80	18	sealed on both sides	29,5	18,0	5.600	370
6308-2RS-MAE	-	40	90	23	sealed on both sides	40,8	24,0	4.900	630
61809-ZZ-MAE	-	45	58	7	shielded on both sides	5,35	5,25	6.000	140
61809-2RS-MAE	-	45	58	7	sealed on both sides	5,35	5,25	4.200	140
6009-ZZ-MAE	-	45	75	16	shielded on both sides	21,0	14,8	8.000	250
6009-2RS-MAE	-	45	75	16	sealed on both sides	21,0	14,8	5.600	250
6209-ZZ-MAE	-	45	85	19	shielded on both sides	31,5	20,5	7.000	410
6209-2RS-MAE	-	45	85	19	sealed on both sides	31,5	20,5	4.900	410
6309-ZZ-MAE	-	45	100	25	shielded on both sides	52,8	31,8	6.300	830
6309-2RS-MAE	-	45	100	25	sealed on both sides	52,8	31,8	4.400	830
6010-ZZ-MAE	-	50	80	16	shielded on both sides	22,0	16,2	7.000	260
6010-2RS-MAE	-	50	80	16	sealed on both sides	22,0	16,2	5.000	260
6210-ZZ-MAE	-	50	90	20	shielded on both sides	35,0	23,2	6.700	460
6210-2RS-MAE	-	50	90	20	sealed on both sides	35,0	23,2	4.700	460
6310-ZZ-MAE	-	50	110	27	shielded on both sides	61,8	38,1	6.000	1050
6310-2RS-MAE	-	50	110	27	sealed on both sides	61,8	38,1	4.200	1050

Angular Contact Ball Bearings SKF®, Single Row, inner diameter 10 - 30 mm

Material: Bearing steel.

- Angular contact ball bearings in premium-quality.
- For common axial and radial load.
- Usable for high speed.
- Basic version for one bearing per bearing point (shaft end).
- A second bearing point (opposite bearing) is required.

Temperature range: -30°C to +90°C (for short time up to +110°C).

Other versions or sizes on request.

Orderung Details: e.g.: Product No., quantity

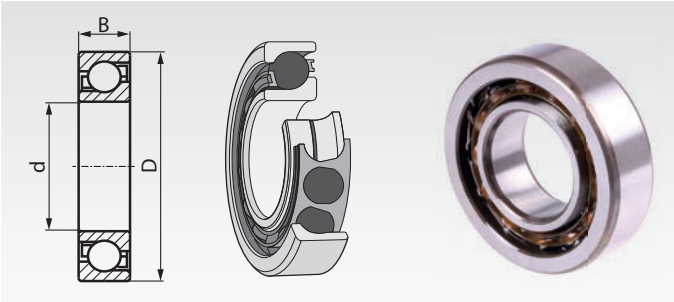

Product No.	SKF-code	Main dimensions d mm	D mm	B mm	Version	Load rating radial dyn.C kN	stat.C_o kN	P_u* kN	Speed base min^{-1}	Speed limit min^{-1}	Weight g
647 710 01	7200 BEP	10	30	9	basic	7,02	3,35	0,14	30.000	30.000	30
647 710 02	7201 BEP	12	32	10	basic	7,61	3,8	0,16	26.000	26.000	36
647 710 05	7202 BEP	15	35	11	basic	8,84	4,8	0,204	24.000	24.000	45
647 710 08	7203 BEP	17	40	12	basic	10,4	5,5	0,236	20.000	20.000	64
647 710 13	7204 BEP	20	47	14	basic	13,3	7,65	0,325	18.000	18.000	110
647 710 22	7205 BEP	25	52	15	basic	14,8	9,3	0,40	15.000	15.000	130
647 710 29	7206 BEP	30	62	16	basic	22,5	14,3	0,61	13.000	13.000	190

Supplementary designations:
B = 40° contact angle.
E = Optimized internal design.
P = Injection moulded window-type cage of glass fibre reinforced polyamide 66, ball centred.

* Fatigue load limit.

Self Aligning Ball Bearings SKF®, Double Row, inner diameter 10 - 50 mm

Material: Bearing steel.

- Self aligning ball bearings in premium-quality.
- For middle-high, common axial and radial load.
- Usable at angular displacement.
- Usable for high speed.

Temperature range: -30°C to +90°C (for short time up to +110°C).

Clearance CN: Normal bearing play. **Clearance C3:** Greater play.

Other versions or sizes on request.

Orderung Details: e.g.: Product No., quantity

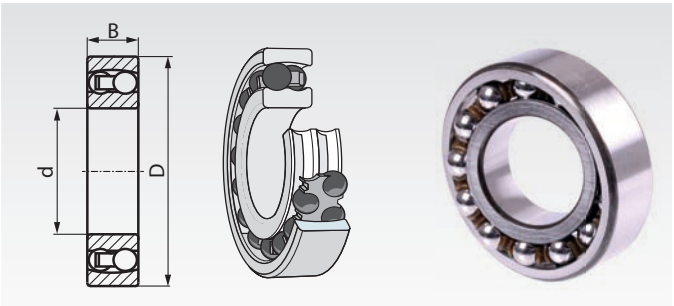

Product No. Clearance CN	SKF-Code	Product No. Clearance C3	SKF-Code	Main dimensions d mm	D mm	B mm	Version	Load radial dyn.C kN	stat.C_o kN	α* Grad	Speed limit min^{-1}	Weight g
647 730 12	1200 ETN9	-	-	10	30	9	basic, open	5,53	1,18	2,5	36.000	34
647 730 14	2200 E-2RS1TN9	-	-	10	30	14	sealed on both sides	5,53	1,18	1,5	17.000	48
647 730 16	1201 ETN9	-	-	12	32	10	basic, open	6,24	1,43	2,5	32.000	40
647 730 18	2201 E-2RS1TN9	-	-	12	32	14	sealed on both sides	6,24	1,43	1,5	16.000	53
647 730 24	1202 ETN9	**647 733 24**	1202 ETN9/C3	15	35	11	basic, open	7,41	1,76	2,5	28.000	49
647 730 26	2202 E-2RS1TN9	**647 733 26**	2202 E-2RS1TN9/C3	15	35	14	sealed on both sides	7,41	1,76	1,5	14.000	58
647 730 32	1203 ETN9	**647 733 32**	1203 ETN9/C3	17	40	12	basic, open	8,84	2,2	2,5	24.000	73
647 730 34	2203 E-2RS1TN9	-	-	17	40	16	sealed on both sides	8,84	2,2	1,5	12.000	89
647 730 40	1204 ETN9	**647 733 40**	1204 ETN9/C3	20	47	14	basic, open	12,7	3,4	2,5	20.000	120
647 730 42	2204 E-2RS1TN9	**647 733 42**	2204 E-2RS1TN9/C3	20	47	18	sealed on both sides	12,7	3,4	1,5	10.000	140
647 730 48	1205 ETN9	**647 733 48**	1205 ETN9/C3	25	52	15	basic, open	14,3	4,0	2,5	18.000	140
647 730 50	2205 E-2RS1TN9	**647 733 50**	2205 E-2RS1TN9/C3	25	52	18	sealed on both sides	14,3	4,0	1,5	9.000	160
647 730 56	1206 ETN9	**647 733 56**	1206 ETN9/C3	30	62	16	basic, open	15,6	4,65	2,5	15.000	220
647 730 58	2206 E-2RS1TN9	-	-	30	62	20	sealed on both sides	15,6	4,65	1,5	7.500	260
647 730 64	1207 ETN9	**647 733 64**	1207 ETN9/C3	35	72	17	basic, open	19,0	6,0	2,5	13.000	320
647 730 66	2207 E-2RS1TN9	**647 733 66**	2207 E-2RS1TN9/C3	35	72	23	sealed on both sides	19,0	6,0	1,5	6.300	410
647 730 72	1208 ETN9	**647 733 72**	1208 ETN9/C3	40	80	18	basic, open	19,9	6,95	2,5	11.000	420
647 730 74	2208 E-2RS1TN9	-	-	40	80	23	sealed on both sides	19,9	6,95	1,5	5.600	500
647 730 82	1209 ETN9	**647 733 82**	1209 ETN9/C3	45	85	19	basic, open	22,9	7,8	2,5	11.000	470
647 730 84	2209 E-2RS1TN9	-	-	45	85	23	sealed on both sides	22,9	7,8	1,5	5.300	530
647 730 90	1210 ETN9	**647 733 90**	1210 ETN9/C3	50	90	20	basic, open	26,5	9,15	2,5	10.000	530
647 730 92	2210 E-2RS1TN9	-	-	50	90	23	sealed on both sides	22,9	8,15	1,5	4.800	570

Supplementary designations:
E = Optimized internal design.
TN9 = Injection moulded snap-type cage of glass fibre reinforced polyamide 66, ball centred
2RS1 = Sheet steel reinforced contact seal of acrylonitrile-butadiene rubber (NBR) on both sides.
C3 = greater bearing clearance.

* Max. disalignement.

Cylindrical Roller Bearings SKF®, Single Row, inner diameter 15 - 50 mm

Material: Bearing steel.

- Cylindrical roller bearings in premium-quality.
- For high radial load.
- Displaceable in both directions (type NU) or in one direction (Type NJ).
- Usable for high speed, with groove and 3 lubrication holes.
- Easy to mount (the inner ring is loose).

Temperature range: -30°C to +90°C (for short time up to +110°C).

Clearance CN: Normal bearing play. **Clearance C3:** Greater play.

Other versions or sizes on request.

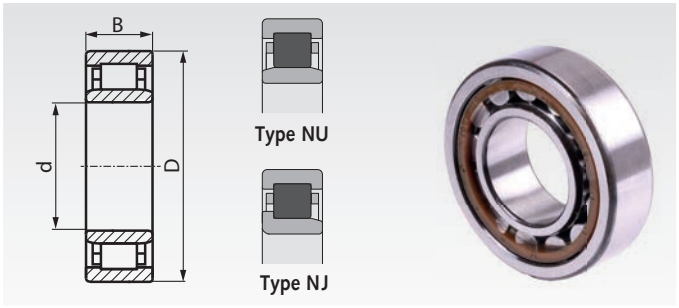

Orderung Details: e.g.: Product No., quantity

Product No. Clearance CN	SKF-Code	Product No. Clearance C3	SKF-Code	Main dimensions d mm	D mm	B mm	Displaceability of the inner ring	Load radial dyn.C kN	stat.C_o kN	s* mm	Speed limit min^{-1}	Weight g
647 750 01	NU 202 ECP	**647 753 01**	NU 202 ECP/C3	15	35	11	to both sides	12,5	10,2	1,0	26.000	47
647 750 02	NJ 202 ECP	**-**	-	15	35	11	to one side	12,5	10,2	1,0	26.000	48
647 750 03	NU 203 ECP	**647 753 03**	NU 203 ECP/C3	17	40	12	to both sides	17,2	14,3	1,0	22.000	68
647 750 04	NJ 203 ECP	**647 753 04**	NJ 203 ECP/C3	17	40	12	to one side	17,2	14,3	1,0	22.000	70
647 750 13	NU 204 ECP	**647 753 13**	NU 204 ECP/C3	20	47	14	to both sides	25,1	22,0	1,0	19.000	110
647 750 14	NJ 204 ECP	**647 753 14**	NJ 204 ECP/C3	20	47	14	to one side	25,1	22,0	1,0	19.000	110
647 750 28	NU 205 ECP	**647 753 28**	NU 205 ECP/C3	25	52	15	to both sides	28,6	27,0	1,3	16.000	130
647 750 29	NJ 205 ECP	**647 753 29**	NJ 205 ECP/C3	25	52	15	to one side	28,6	27,0	1,3	16.000	140
647 750 52	NU 206 ECP	**647 753 52**	NU 206 ECP/C3	30	62	16	to both sides	44,0	36,5	1,3	14.000	200
647 750 53	NJ 206 ECP	**647 753 53**	NJ 206 ECP/C3	30	62	16	to one side	44,0	36,5	1,3	14.000	200
647 750 62	NU 207 ECP	**647 753 62**	NU 207 ECP/C3	35	72	17	to both sides	56,0	48,0	1,3	12.000	290
647 750 63	NJ 207 ECP	**647 753 63**	NJ 207 ECP/C3	35	72	17	to one side	56,0	48,0	1,3	12.000	300
647 750 78	NU 208 ECP	**647 753 78**	NU 208 ECP/C3	40	80	18	to both sides	62,0	53,0	1,4	11.000	370
647 750 79	NJ 208 ECP	**647 753 79**	NJ 208 ECP/C3	40	80	18	to one side	62,0	53,0	1,4	11.000	390
647 750 95	NU 209 ECP	**647 753 95**	NU 209 ECP/C3	45	85	19	to both sides	69,5	64,0	1,2	9.500	430
647 750 96	NJ 209 ECP	**647 753 96**	NJ 209 ECP/C3	45	85	19	to one side	69,5	64,0	1,2	9.500	440
647 751 12	NU 210 ECP	**647 754 12**	NU 210 ECP/C3	50	90	20	to both sides	73,5	69,5	1,5	9.000	480
647 751 13	NJ 210 ECP	**647 754 13**	NJ 210 ECP/C3	50	90	20	to one side	73,5	69,5	1,5	9.000	490

Supplementary designations:
EC = Optimized internal design.
P = Injection moulded window-type cage of glass fibre reinforced polyamide 66, ball centred.
C3 = greater bearing clearance.

* Max. displacement from the middle.

Spherical Roller Bearings SKF®, Double Row, inner diameter 25 - 50 mm

Material: Bearing steel.

- Spherical roller bearings in premium-quality.
- For very high radial load and common high axial load in both directions.
- Usable at angular displacement.
- Usable for high speed, with groove and 3 lubrication holes.

Temperature range: -30°C to +150°C (for short time up to +200°C).

Clearance CN: Normal bearing play. **Clearance C3:** Greater play.

Other versions or sizes on request.

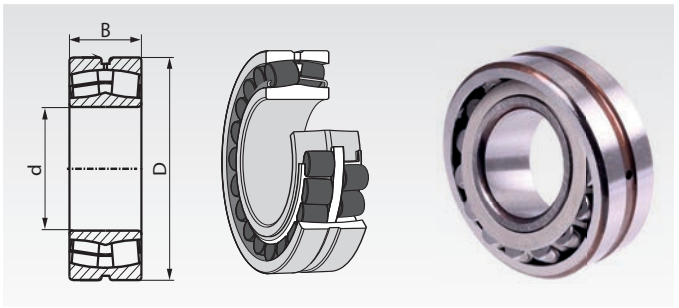

Orderung Details: e.g.: Product No., quantity

Product No. Clearance CN	SKF-Code	Product No. Clearance C3	SKF-Code	Main dimensions d mm	D mm	B mm	Load rating radial dyn.C kN	stat.C_o kN	α* Grad	P_u** kN	Speed base min^{-1}	Speed limit min^{-1}	Weight g
647 760 12	22205 E	**647 763 12**	22205 E/C3	25	52	18	49,0	44	2	4,75	13.000	17.000	260
647 760 14	22206 E	**647 763 14**	22206 E/C3	30	62	20	64,0	60	2	6,4	10.000	14.000	290
647 760 16	22207 E	**647 763 16**	22207 E/C3	35	72	23	86,5	85	2	9,3	9.000	12.000	450
647 760 18	22208 E	**647 763 18**	22208 E/C3	40	80	23	96,5	90	2	9,8	8.000	11.000	530
647 760 22	22209 E	**647 763 22**	22209 E/C3	45	85	23	102,0	98	2	10,8	7.500	10.000	580
647 760 28	22210 E	**647 763 28**	22210 E/C3	50	90	23	104,0	108	2	11,8	7.000	9.500	630

Supplementary designations:
E = Two pressed window-type steel cages, flangeless inner ring and guide ring centred on the inner ring.
C3 = greater bearing clearance.

* Max. disalignement.
** Fatigue load limit.

Tapered Roller Bearings SKF®, Single Row, inner diameter 15 - 50 mm

Material: Bearing steel.

- Tapered roller bearings in premium-quality.
- For common axial and radial load.
- Usable for low speed to middle speed.
- Easy to mount (the outer ring is loose).

Temperature range: -30°C to +90°C (for short time up to +110°C).

Other versions or sizes on request.

Orderung Details: e.g.: Product No., quantity

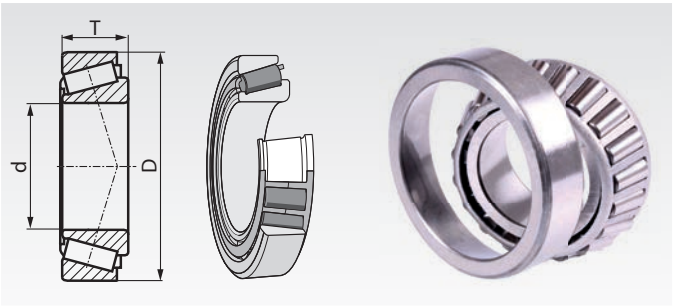

Product No.	SKF-Code	Main dimensions d mm	D mm	T mm	Version	Load rating radial dyn.C kN	stat.C_o kN	P_u* kN	Speed base min^{-1}	Speed limit min^{-1}	Weight g
647 770 10	30302 J2	15	42	14,25	standard size	22,4	20,0	2,08	13.000	18.000	95
647 770 11	30203 J2	17	40	13,25	compakt size	19,0	18,6	1,83	13.000	18.000	75
647 770 12	30303 J2	17	47	15,25	medium size	28,1	25,0	2,75	12.000	16.000	130
647 770 14	32004 X/Q	20	42	15	ISO-size	24,2	27,0	2,70	12.000	16.000	97
647 770 15	30204 J2/Q	20	47	15,25	medium size	27,5	28,0	3,00	11.000	15.000	120
647 770 16	30304 J2/Q	20	52	16,25	heavy size	34,1	32,5	3,60	11.000	14.000	170
647 770 19	32005 X/Q	25	47	15	ISO-size	27,0	32,5	3,25	11.000	14.000	110
647 770 20	30205 J2/Q	25	52	16,25	medium size	30,8	33,5	3,45	10.000	13.000	150
647 770 23	30305 J2/Q	25	62	18,25	heavy size	44,6	43,0	4,75	9.000	12.000	260
647 770 29	32006 X/Q	30	55	17	ISO-size	35,8	44,0	4,55	9.000	12.000	170
647 770 30	30206 J2/Q	30	62	17,25	medium size	40,2	44,0	4,80	8.500	11.000	230
647 770 34	30306 J2/Q	30	72	20,75	heavy size	56,1	56,0	6,40	7.500	10.000	390
647 770 39	32007 X/Q	35	62	18	ISO-size	49,0	54,0	5,85	8.500	11.000	220
647 770 41	30207 J2/Q	35	72	18,25	medium size	51,2	56,0	6,10	7.000	9.500	320
647 770 44	30307 J2/Q	35	80	22,75	heavy size	72,1	73,5	8,30	6.700	9.000	520
647 770 54	32008 X/Q	40	68	19	ISO-size	52,8	71,0	7,65	7.000	9.500	270
647 770 57	30208 J2/Q	40	80	19,75	medium size	61,6	68,0	7,65	6.300	8.500	420
647 770 61	30308 J2/Q	40	90	25,25	heavy size	85,8	95,0	10,80	6.000	8.000	720
647 770 64	32009 X/Q	45	75	20	ISO-size	58,3	80,0	8,80	6.300	8.500	340
647 770 67	30209 J2/Q	45	85	20,75	medium size	66,0	76,5	8,65	6.000	8.000	480
647 770 73	30309 J2/Q	45	100	27,25	heavy size	108,0	120,0	14,30	5.300	7.000	970
647 770 78	32010 X/Q	50	80	20	ISO-size	60,5	88,0	9,65	6.000	8.000	370
647 770 83	30210 J2/Q	50	90	21,75	medium size	76,5	91,5	10,40	5.600	7.500	540
647 770 90	30310 J2/Q	50	110	29,25	heavy size	143,0	140,0	16,60	5.300	6.300	1250

Supplementary designations:
J2 = Steel cage in special version.
X = Boundary dimensions changed to conform to ISO
Q = Optimized contact geometry and surface finish.

* Fatigue load limit.

Locknuts, Lockwashers page 515



Hook Wrenches page 516



Radial Shaft Seals Design A, for Shaft Diameter 6 to 30 mm

Material:: Elastomer: NBR.
Stiffening ring and tension spring from steel.

- According to DIN 3760 Design A respectively ISO 6194-1 figure 1 and in many additional sizes.
- Most common design, with one seal lip.
- For oil- and grease-lubricated applications.
- For high speed, sliding speed up to 14m/s.

Recommended tolerances: Housing bore H8, shaft-Ø h11,
Shaft roughness R_a 0.2 to 0.8 µm.

Temperature range: -40°C to +100°C (for short time up to +120°C).

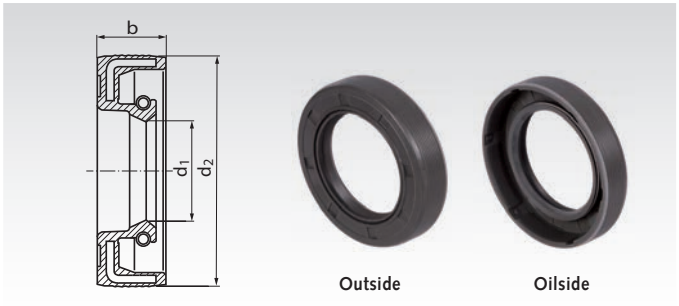

Ordering Details: e.g.: Product No. 647 900 05, Radial Shaft Seal Design A, 6x16x5mm

Product No.	d_1 mm	d_2 mm	b mm	Weight g
647 900 05	6	16	5	1,7
647 900 06	6	16	7	1,8
647 900 07	6	22	7	3,8
647 900 08	7	22	7	3,6
647 900 12	8	22	7	4,0
647 900 14	10	19	7	2,7
647 900 17	10	22	7	3,4
647 900 18	10	24	7	4,0
647 900 20	10	26	7	4,4
647 900 21	12	19	5	1,5
647 900 22	12	22	5	2,5
647 900 23	12	22	6	2,8
647 900 24	12	22	7	3,6
647 900 25	12	24	7	3,8
647 900 27	12	28	7	5,3
647 900 28	12	30	7	6,1
647 900 29	12	32	7	6,5
647 900 31	14	24	7	4,0
647 900 32	14	25	5	3,0
647 900 34	14	30	7	5,8
647 900 35	15	24	7	3,3
647 900 36	15	25	5	2,6
647 900 38	15	26	7	4,0
647 900 39	15	30	7	6,2
647 900 40	15	32	7	6,4
647 900 41	15	35	7	8,5
647 900 43	15	40	10	12,9
647 900 45	16	28	7	4,8
647 900 48	16	30	7	5,5
647 900 49	16	32	7	6,3
647 900 50	16	35	7	7,5
647 900 51	17	28	7	4,4
647 900 52	17	29	5	4,1
647 900 53	17	30	7	6,0
647 900 54	17	32	7	6,1
647 900 55	17	35	7	8,5
647 900 57	17	40	7	10,9
647 900 58	17	40	10	11,6
647 900 59	18	28	7	4,1
647 900 61	18	30	7	5,5
647 900 62	18	32	7	6,7
647 900 63	18	35	7	7,9
647 900 66	19	30	7	5,7
647 900 68	19	32	7	6,7
647 900 70	20	30	5	3,7
647 900 71	20	30	7	5,5
647 900 73	20	32	7	6,3
647 900 76	20	35	7	8,7
647 900 77	20	35	10	10,2
647 900 80	20	36	7	8,4
647 900 82	20	40	7	10,5
647 900 84	20	42	7	11,7
647 900 87	20	47	7	15,2
647 900 88	20	47	10	18,8
647 900 89	20	52	7	17,9
647 900 90	20	52	10	22,5

Product No.	d_1 mm	d_2 mm	b mm	Weight g
647 900 93	22	32	7	5,7
647 900 94	22	35	7	7,0
647 900 96	22	38	8	10,0
647 900 97	22	40	7	10,1
647 900 98	22	40	10	13,3
647 901 02	22	47	7	15,2
647 901 06	24	35	7	6,7
647 901 07	24	37	7	7,7
647 901 08	24	40	7	9,6
647 901 12	25	35	7	6,4
647 901 13	25	37	5	5,7
647 901 15	25	37	7	7,2
647 901 16	25	38	7	7,9
647 901 17	25	40	5	7,6
647 901 18	25	40	7	9,0
647 901 19	25	40	8	9,7
647 901 20	25	40	10	12,2
647 901 23	25	42	7	10,1
647 901 24	25	42	10	13,0
647 901 27	25	45	10	16,3
647 901 29	25	47	7	13,2
647 901 30	25	47	10	17,3
647 901 31	25	50	10	19,6
647 901 32	25	52	7	18,4
647 901 33	25	52	8	17,8
647 901 34	25	52	10	21,3
647 901 35	25	62	7	25,5
647 901 37	25	62	10	28,8
647 901 39	26	37	7	7,3
647 901 40	26	38	5	6,2
647 901 41	26	38	7	8,3
647 901 43	26	47	7	13,5
647 901 44	27	37	7	6,4
647 901 49	28	38	7	6,7
647 901 51	28	40	7	8,0
647 901 53	28	42	7	10,1
647 901 54	28	42	8	10,2
647 901 57	28	47	7	14,1
647 901 59	28	52	7	15,6
647 901 60	28	52	10	20,1
647 901 61	30	40	7	7,4
647 901 64	30	42	7	8,3
647 901 65	30	42	8	9,7
647 901 67	30	45	7	10,5
647 901 68	30	45	8	11,9
647 901 69	30	46	7	10,9
647 901 71	30	47	7	11,9
647 901 72	30	47	8	13,1
647 901 73	30	47	10	15,2
647 901 76	30	50	7	13,8
647 901 77	30	50	10	16,8
647 901 78	30	52	7	15,5
647 901 79	30	52	8	17,1
647 901 80	30	52	10	20,0
647 901 81	30	55	7	17,5
647 901 82	30	55	10	22,1
647 901 83	30	62	7	23,4
647 901 84	30	62	10	26,9
647 901 85	30	72	10	37,5

Radial Shaft Seals Design A, for Shaft Diameter 32 to 50 mm

Material:: Elastomer: NBR.
Stiffening ring and tension spring from steel.

- According to DIN 3760 Design A respectively ISO 6194-1 figure 1 and in many additional sizes.
- Most common design, with one seal lip.
- For oil- and grease-lubricated applications.
- For high speed, sliding speed up to 14m/s.

Recommended tolerances: Housing bore H8, shaft-Ø h11,
Shaft roughness R_a 0.2 to 0.8 µm.

Temperature range: -40°C to +100°C (for short time up to +120°C).

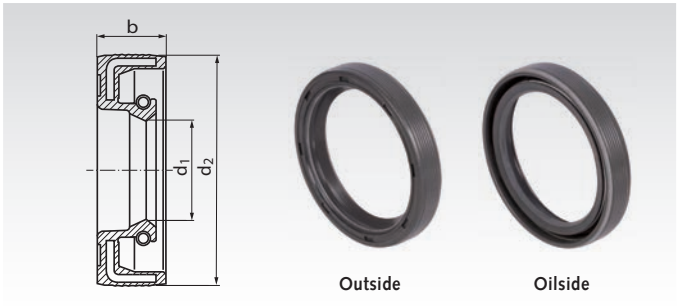

Ordering Details: e.g.: Product No. 647 901 86, Radial Shaft Seal Design A, 32x42x7mm

Product No.	d_1 mm	d_2 mm	b mm	Weight g
647 901 86	32	42	7	7,4
647 901 89	32	45	7	9,5
647 901 92	32	47	7	11,0
647 901 96	32	50	8	14,1
647 901 97	32	50	10	15,8
647 901 98	32	52	7	14,4
647 902 02	32	62	10	26,6
647 902 05	33	45	7	9,8
647 902 10	34	62	10	27,1
647 902 11	35	45	7	8,3
647 902 13	35	47	7	10,2
647 902 17	35	50	7	12,4
647 902 18	35	50	8	14,2
647 902 19	35	50	10	15,8
647 902 20	35	52	7	13,6
647 902 21	35	52	8	15,1
647 902 22	35	52	10	17,7
647 902 24	35	55	7	15,4
647 902 25	35	55	8	17,7
647 902 26	35	55	10	22,5
647 902 27	35	56	10	21,2
647 902 28	35	58	10	22,1
647 902 30	35	62	7	21,3
647 902 31	35	62	8	22,8
647 902 32	35	62	10	24,9
647 902 34	35	72	10	38,6
647 902 35	35	72	12	38,9
647 902 36	35	80	12	48,4
647 902 37	36	47	7	9,3
647 902 38	36	50	7	11,9
647 902 39	36	52	7	13,0
647 902 43	38	50	7	10,7
647 902 44	38	52	7	12,0
647 902 45	38	52	8	13,8
647 902 47	38	55	7	14,2
647 902 55	38	62	10	24,6
647 902 56	38	72	10	34,4
647 902 60	40	52	7	12,8
647 902 61	40	52	8	12,9
647 902 62	40	55	7	13,6
647 902 63	40	55	8	15,1
647 902 64	40	56	8	16,2
647 902 67	40	58	10	20,8
647 902 69	40	60	10	26,9
647 902 71	40	62	7	18,9
647 902 72	40	62	8	19,9
647 902 73	40	62	10	24,7
647 902 74	40	65	10	26,9
647 902 76	40	68	8	26,5
647 902 77	40	68	10	29,2
647 902 79	40	72	7	28,8
647 902 80	40	72	10	34,6
647 902 82	40	80	10	42,4

Product No.	d_1 mm	d_2 mm	b mm	Weight g
647 902 88	42	55	7	12,3
647 902 89	42	55	8	14,2
647 902 91	42	60	7	16,1
647 902 92	42	62	7	18,2
647 902 93	42	62	8	19,4
647 902 94	42	62	10	22,6
647 902 95	42	65	10	25,2
647 902 99	42	72	8	28,8
647 903 00	42	72	10	32,6
647 903 02	44	60	10	19,4
647 903 03	44	62	10	22,1
647 903 04	44	65	10	24,6
647 903 06	45	58	7	13,8
647 903 07	45	60	7	14,8
647 903 08	45	60	8	16,5
647 903 09	45	60	10	18,9
647 903 10	45	62	7	17,0
647 903 11	45	62	8	17,8
647 903 12	45	62	10	22,1
647 903 13	45	65	8	21,3
647 903 14	45	65	10	24,5
647 903 18	45	72	8	26,5
647 903 19	45	72	10	31,2
647 903 20	45	75	8	30,1
647 903 21	45	75	10	32,6
647 903 22	45	80	10	46,2
647 903 23	45	85	10	47,0
647 903 26	46	65	10	23,5
647 903 29	48	62	8	16,2
647 903 30	48	65	10	22,2
647 903 32	48	72	7	23,8
647 903 33	48	72	8	25,5
647 903 34	48	72	10	28,2
647 903 35	50	62	7	12,8
647 903 37	50	65	8	18,0
647 903 38	50	65	10	25,0
647 903 39	50	68	8	23,3
647 903 40	50	68	10	24,0
647 903 41	50	70	10	25,8
647 903 42	50	72	8	23,6
647 903 43	50	72	10	32,1
647 903 44	50	72	12	36,3
647 903 45	50	75	10	36,1
647 903 46	50	80	8	31,6
647 903 47	50	80	10	43,4
647 903 48	50	85	10	49,7
647 903 49	50	90	10	58,5

Other sizes and types on request.

Bushes, Design J Similar to DIN 1850 (DIN 4379 Version C) Made from Sintered Bronze

Self lubricating, oil coated, pressed ready-to-install and [1] kalibrated. After press-fitting them into a rigid bearing housing with a mounting hole H7, these bearings have a bore of H7.
Edges chamfered at 45°, at choice of the manufacturer.
The concentricity tolerance refers to d_2.
[1]) no statement regarding the surface roughness according to DIN 3141 (prenorm) can be given due to the porous structure of the sintered metal.

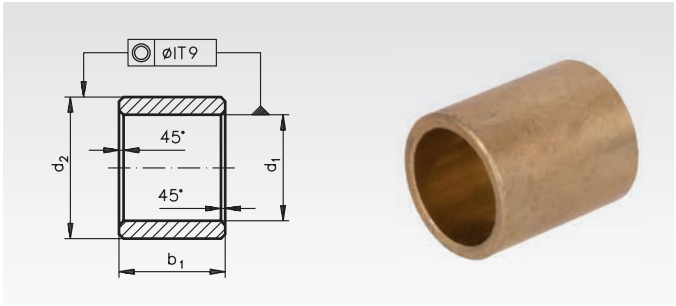

Ordering Details: e.g.: Product No. 623 302 00, Bronze Bush, 3 mm Bore

Product No.	$d_1^{F7/G7}$ mm	d_2^{s7} mm	$b_1^{\pm 0,1}$ mm	Weight g
623 302 00	3	6	4	0,56
623 303 00	3	6	6	0,86
623 304 00	4	7	4	0,70
623 306 00	4	8	4	1,01
623 306 05	5	8	8	1,64
623 308 00	5	8	10	2,05
623 309 00	5	8	16	3,28
623 309 05	6	9	6	1,42
623 311 00	6	9	10	2,37
623 311 05	6	9	12	2,84
623 311 10	6	9	16	3,79
623 312 00	6	10	6	1,96
623 313 00	6	10	10	3,27
623 313 05	6	10	12	3,92
623 313 10	6	10	16	5,23
623 313 15	6	12	6	3,41
623 316 00	8	11	8	2,40
623 316 05	8	11	12	3,60
623 317 00	8	12	8	3,37
623 318 00	8	12	12	5,05
623 318 05	8	12	20	8,42
623 321 00	10	13	10	3,63
623 322 00	10	14	16	8,08
623 323 00	10	16	10	8,20
623 325 00	12	15	12	5,11
623 326 00	12	15	20	8,52
623 327 00	12	16	12	7,06
623 328 00	12	18	12	10,70
623 328 05	12	18	16	14,27
623 328 10	12	18	20	17,83
623 331 00	14	18	22	14,78
623 331 05	14	20	12	12,85
623 332 00	14	20	14	14,99
623 335 00	15	19	20	14,30
623 336 00	15	21	16	18,16
623 339 00	16	20	16	12,15
623 340 00	16	20	20	15,28
623 341 00	16	20	25	18,95
623 341 05	16	20	32	24,26
623 342 00	16	22	16	19,18
623 343 00	16	22	20	23,95
623 343 05	16	22	30	35,93
623 346 00	18	22	18	15,14
623 347 00	18	24	18	23,83
623 348 00	18	24	28	37,09
623 349 00	18	25	18	28,59
623 351 00	20	24	32	29,79
623 352 00	20	25	16	18,92
623 352 05	20	25	20	23,65
623 353 00	20	25	25	29,58
623 353 05	20	25	30	35,48
623 354 00	20	26	20	29,22
623 354 05	20	26	25	36,53
623 354 10	20	26	30	43,83
623 354 15	20	26	32	46,75
623 355 00	20	28	25	50,49
623 356 00	22	28	22	34,85
623 358 00	25	30	20	28,94
623 359 00	25	30	25	36,20
623 359 05	25	30	30	43,44
623 359 10	25	30	40	57,92
623 359 15	25	32	20	41,94
623 360 00	25	32	25	52,43
623 360 05	25	32	30	62,92
623 360 10	25	32	32	67,11
623 360 15	25	32	40	83,89
623 362 00	28	36	28	73,07
623 363 00	30	38	20	57,21
623 364 00	30	38	24	68,65
623 365 00	30	38	30	85,80
623 365 05	30	38	40	114,40
623 366 00	30	40	30	90,82
623 367 00	32	40	32	96,87
623 369 00	35	44	28	103,60
623 370 00	35	44	35	129,90
623 371 00	35	45	35	147,26
623 372 00	36	45	36	139,20
623 374 00	40	46	32	86,82
623 374 05	40	46	40	108,53
623 375 00	40	50	25	118,30
623 376 00	40	50	40	189,31
623 377 00	45	55	45	236,67
623 378 00	45	56	45	263,11
623 379 00	50	56	32	107,04
623 379 05	50	56	50	167,25
623 380 00	50	60	32	185,13
623 380 05	50	60	40	231,42
623 381 00	50	60	50	289,27

Technical Data:

Surface pressure: max. 35 N/mm², depending on speed and diameter

Loctite bonding products (bearing adhesive) page 812.

Flange Bushes Version V Similar to DIN 1850 (DIN 4379 Shape F) Made from Sintered Bronze for Plain Bearings

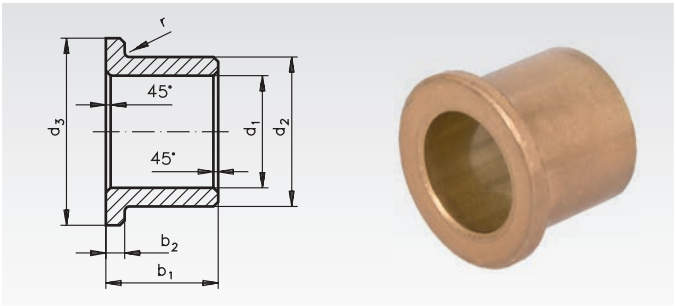

Self lubricating, oil coated, pressed ready-to-install and [1] kalibrated. After press-fitting them into a rigid bearing housing with a mounting hole H7, these bearings have a bore of H7.

Ordering Details: e.g.: Product No. 623 501 00, Flange Bronze Bush, 3 mm Bore

Product No.	d_1^{G8} mm	d_2^{s8} mm	d_3^{js13} mm	b_1^{js13} mm	b_2^{js14} mm	Weight g
623 501 00	3	6	9	4	1,5	0,92
623 502 00	3	6	9	10	1,5	1,77
623 504 00	4	8	12	4	2	1,79
623 504 05	4	8	12	12	2	3,87
623 508 00	6	10	14	6	2	3,03
623 509 00	6	10	14	10	2	4,38
623 510 00	6	10	14	16	2	6,40
623 512 00	8	12	16	8	2	4,53
623 513 00	8	12	16	12	2	6,22
623 514 00	8	12	16	16	2	7,91
623 517 00	10	13	16	10	1,5	9,08
623 518 00	10	13	16	16	1,5	6,50
623 518 05	10	15	20	10	3	9,34
623 518 10	10	16	22	10	3	11,80
623 518 15	10	16	22	16	3	16,72
623 520 00	12	15	18	12	1,5	5,89
623 521 00	12	15	18	16	1,5	7,60
623 521 05	12	17	22	20	2,5	18,33
623 522 00	12	17	22	12	3	11,71
623 523 00	12	18	24	20	3	22,91
623 524 00	14	18	22	14	2	11,10
623 527 00	16	20	24	16	2	13,96
623 528 00	16	20	24	20	2	17,17
623 528 05	16	22	28	25	3	34,71
623 529 00	16	22	28	16	3	23,95
623 530 00	16	22	28	20	3	28,63
623 532 00	18	22	26	18	2	17,10
623 533 00	18	24	30	18	3	28,97
623 534 00	20	24	28	16	2	17,03
623 535 00	20	24	28	20	2	20,70
623 535 05	20	26	32	15	3	21,77
623 536 00	20	26	32	16	3	28,94
623 537 00	20	26	32	20	3	34,45
623 538 00	20	26	32	25	3	41,69
623 538 05	20	26	32	32	3	51,94
623 539 00	20	28	35	20	4	49,67
623 540 00	25	30	35	20	2,5	33,20
623 541 00	25	30	35	25	2,5	40,38
623 541 05	25	32	39	25	3,5	64,58
623 542 00	28	33	38	22	2,5	39,96
623 542 05	28	33	38	36	2,5	62,42
623 543 00	28	36	44	22	4	72,72
623 544 00	30	38	46	20	4	71,36
623 544 05	30	38	46	25	4	85,67
623 544 10	30	38	46	30	4	99,97
623 547 00	36	45	54	28	4,5	128,44
623 547 05	36	45	54	36	4,5	159,12
623 551 00	36	45	54	22	4,5	105,42
623 550 00	40	46	52	40	3	117,83
623 552 00	40	50	60	25	5	147,26
623 552 05	40	50	60	40	5	218,27
623 555 00	50	60	70	32	5	219,32
623 555 05	50	60	70	50	5	323,46

Edges chamfered at 45°, at choice of the manufacturer.
The concentricity tolerance refers to d_2.
[1] no statement regarding the surface roughness according to DIN 3141 (prenorm) can be given due to the porous structure of the sintered metal.
Dimension r: For bores 3 - 8 mm = 0.3 mm, bores 9 - 22 mm = 0.6 mm, bores 25 - 40 mm = 0.8 mm

Raw Material of Sintered Bronze with Bore for Plain Bearing Production

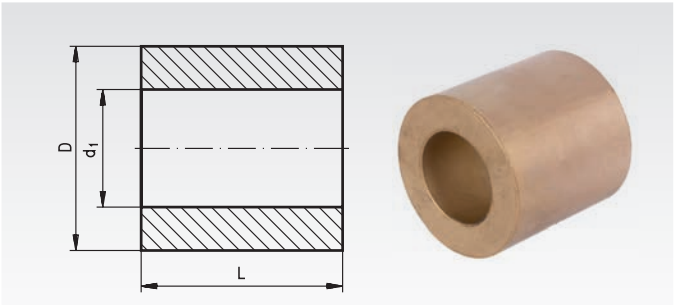

Tube of sintered bronze to be machined into plain bearings.
After machining, the work piece should be coated with lubricants.

Ordering Details: e.g.: Product No. 623 390 20, Raw Material, 38/66 x 65mm

Tube Product No.	d_1 mm	D mm	L mm	Weight kg
623 390 20	$38^{\pm1}$	$66^{\pm1,5}$	$65^{\pm2}$	0,99
623 390 25	$38^{\pm1}$	$66^{\pm1,5}$	$120^{\pm2}$	1,84
623 390 30	$45^{\pm1}$	$105^{\pm1,5}$	$120^{\pm2}$	5,68
623 390 35	$53^{\pm1}$	$85^{\pm1,5}$	$65^{\pm2}$	1,51
623 390 37	$53^{\pm1}$	$85^{\pm1,5}$	$120^{\pm2}$	2,79
623 390 38	$68^{\pm1}$	$104^{\pm1,5}$	$65^{\pm2}$	2,12
623 390 40	$68^{\pm1}$	$104^{\pm1,5}$	$120^{\pm2}$	3,91
623 390 45	$83^{\pm1}$	$123^{\pm1,5}$	$65^{\pm2}$	2,82
623 390 47	$83^{\pm1}$	$123^{\pm1,5}$	$120^{\pm2}$	5,21
623 390 48	$98^{\pm1}$	$142^{\pm1,5}$	$65^{\pm2}$	3,61
623 390 50	$98^{\pm1}$	$142^{\pm1,5}$	$120^{\pm2}$	6,66

Raw Material of Sintered Bronze without Bore for Plain Bearing Production

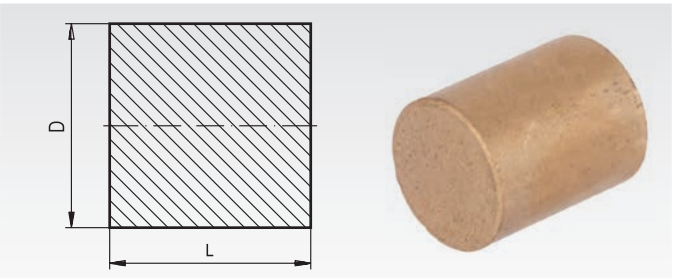

Solid material of sintered bronze to be machined into plain bearings. After machining, the work piece should be coated with lubricants.

Ordering Details: e.g.: Product No. 623 395 20, Raw Material 15 x 30 mm

Solid Material Product No.	D mm	L mm	Weight kg
623 395 20	$15^{\pm0,8}$	$30^{\pm1,5}$	0,04
623 395 23	$20^{\pm0,8}$	$25^{\pm1,5}$	0,06
623 395 25	$20^{\pm0,8}$	$50^{\pm1,5}$	0,11
623 395 27	$25^{\pm0,8}$	$25^{\pm1,5}$	0,08
623 395 30	$25^{\pm0,8}$	$50^{\pm1,5}$	0,16
623 395 33	$32^{\pm0,8}$	$40^{\pm1,5}$	0,22
623 395 35	$32^{\pm0,8}$	$80^{\pm1,5}$	0,43
623 395 40	$42^{\pm0,8}$	$50^{\pm1,5}$	0,46
623 395 43	$42^{\pm0,8}$	$100^{\pm2}$	0,92
623 395 45	$45^{\pm1}$	$90^{\pm2}$	0,96
623 395 47	$52^{\pm1}$	$60^{\pm2}$	0,82
623 395 48	$52^{\pm1}$	$120^{\pm2}$	1,64
623 395 50	$62^{\pm1,5}$	$120^{\pm2}$	2,43
623 395 55	$70^{\pm1,5}$	$120^{\pm2}$	3,09

Technical Data:

Surface pressure: max. 35 N/mm², dependent on speed and diameter.

Cylindrical Bushes, Slotted (Without Any Lubrication)

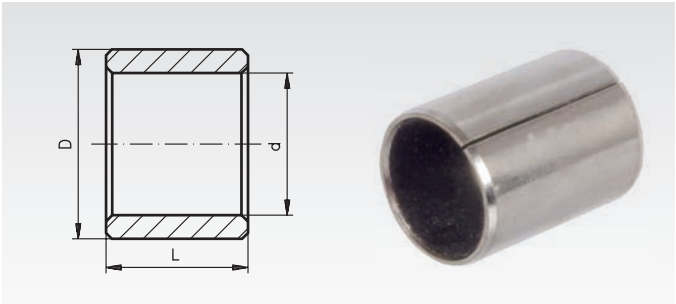

Plain bearing bush from steel sheet with multi-porous bronze layer and sliding surface from PTFE-lead-compound. Specially suited for lubrication-free running, for high loads, extrem temperatures.

Ordering Details: e.g.: Product No. 624 003 04, Cylindrical Bush, 3 mm Bore

Product No.	d x D x L mm	Weight g
624 003 04	3 x 4,5 x 4	0,1
624 003 05	3 x 4,5 x 5	0,3
624 003 06	3 x 4,5 x 6	0,4
624 004 04	4 x 5,5 x 4	0,3
624 004 06	4 x 5,5 x 6	0,6
624 004 08	4 x 5,5 x 8	0,9
624 005 05	5 x 7,0 x 5	0,7
624 005 08	5 x 7,0 x 8	1,1
624 006 05	6 x 8,0 x 5	0,7
624 006 06	6 x 8,0 x 6	0,9
624 006 10	6 x 8,0 x 10	1,7
624 007 10	7 x 9,0 x 10	1,8
624 008 06	8 x 10 x 6	1,2
624 008 08	8 x 10 x 8	1,7
624 008 10	8 x 10 x 10	2,1
624 009 10	9 x 11 x 10	2,2
624 010 06	10 x 12 x 6	1,9
624 010 08	10 x 12 x 8	2,0
624 010 10	10 x 12 x 10	2,5
624 010 12	10 x 12 x 12	2,9
624 010 15	10 x 12 x 15	3,8
624 010 20	10 x 12 x 20	5,3
624 012 06	12 x 14 x 6	1,7
624 012 08	12 x 14 x 8	2,0
624 012 10	12 x 14 x 10	3,0
624 012 12	12 x 14 x 12	3,7
624 012 15	12 x 14 x 15	4,7
624 012 20	12 x 14 x 20	6,1
624 014 10	14 x 16 x 10	3,6
624 014 20	14 x 16 x 20	7,1
624 015 10	15 x 17 x 10	3,8
624 015 12	15 x 17 x 12	4,5
624 015 15	15 x 17 x 15	5,7
624 015 20	15 x 17 x 20	7,6
624 016 10	16 x 18 x 10	4,6
624 016 15	16 x 18 x 15	6,1

Product No.	d x D x L mm	Weight g
624 016 20	16 x 18 x 20	8,1
624 016 25	16 x 18 x 25	10,1
624 018 20	18 x 20 x 20	8,9
624 020 10	20 x 23 x 10	8,8
624 020 12	20 x 23 x 12	8,8
624 020 15	20 x 23 x 15	11,6
624 020 20	20 x 23 x 20	15,1
624 020 30	20 x 23 x 30	23,0
624 022 20	22 x 25 x 20	16,6
624 024 25	24 x 27 x 25	23,8
624 025 15	25 x 28 x 15	14,2
624 025 20	25 x 28 x 20	10,0
624 025 25	25 x 28 x 25	23,9
624 025 30	25 x 28 x 30	28,4
624 025 40	25 x 28 x 40	37,3
624 026 15	26 x 30 x 15	15,6
624 026 20	26 x 30 x 20	26,1
624 026 30	26 x 30 x 30	39,0
624 028 20	28 x 32 x 20	28,8
624 028 25	28 x 32 x 25	39,0
624 030 12	30 x 34 x 12	17,5
624 030 15	30 x 34 x 15	22,9
624 030 20	30 x 34 x 20	30,9
624 030 30	30 x 34 x 30	46,1
624 030 35	30 x 34 x 35	53,0
624 032 20	32 x 36 x 20	32,0
624 032 25	32 x 36 x 25	40,2
624 035 20	35 x 39 x 20	35,4
624 035 40	35 x 39 x 40	70,8
624 038 30	38 x 42 x 30	56,9
624 040 20	40 x 44 x 20	40,0
624 040 30	40 x 44 x 30	60,2
624 040 50	40 x 44 x 50	101,5
624 050 30	50 x 55 x 30	95,0
624 050 50	50 x 55 x 50	159,9

Flange Bushes, Slotted (Without Any Lubrication)

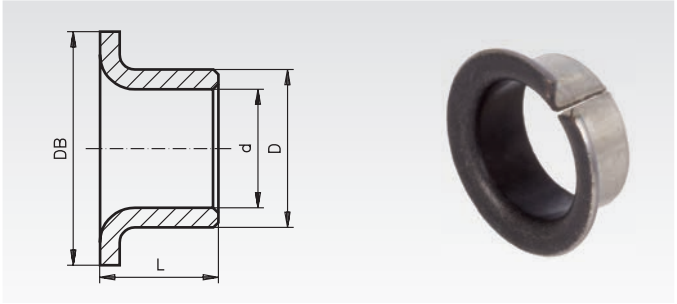

Plain bearing flange bush from steel sheet with multi-porous bronze layer and sliding surface from PTFE-lead-compound. Specially suited for lubrication-free running, for high loads, extrem temperatures.

Ordering Details: e.g.: Product No. 624 103 04, Flange Bush, 3mm Bore

Product No.	d x D / DB x L mm	Weight g
624 103 04	3 x 4,5 / 7 x 5	0,3
624 104 04	4 x 5,5 / 9 x 5,6	0,5
624 105 05	5 x 7 / 10 x 6	0,9
624 106 06	6 x 8 / 12 x 7	1,4
624 108 06	8 x 10 / 15 x 5,5	1,9
624 108 08	8 x 10 / 15 x 9,5	2,3
624 110 08	10 x 12 / 18 x 9	2,9
624 110 12	10 x 12 / 18 x 12	4,0
624 112 15	12 x 14 / 20 x 17	5,6
624 114 15	14 x 16 / 22 x 17	6,2
624 115 12	15 x 17 / 23 x 12	5,0
624 115 20	15 x 17 / 23 x 17	8,5
624 116 20	16 x 18 / 24 x 17	9,1
624 118 12	18 x 20 / 26 x 12	6,6
624 120 12	20 x 23 / 30 x 11,5	13,7
624 122 20	22 x 25 / 32 x 21,5	21,0
624 125 25	25 x 28 / 35 x 26,5	27,3
624 130 30	30 x 34 / 42 x 30	53,3
624 135 20	35 x 39 / 47 x 26	46,0
624 135 40	35 x 39 / 47 x 40	81,4
624 140 40	40 x 44 / 53 x 26	92,0
624 150 40	50 x 55 / 60 x 22	145,8

Note:

According to DIN ISO 3547 the supplied bush may be unround and with open slot. After pressing the slotted bush into an H7-bore, it usually is round and the gap (the slot) is closed.

Loctite bonding products (bearing adhesive) page 812.

Construction
Tin-plated steel back (incl. edges). Multi-porous bronze layer, sliding surface PTFE-lead-compound.

Technical data

Stat. surface pressure	max. 250 N/mm²
Dyn. bearing load	max. 56 N/mm²
Friction coefficient	von 0.03 - 0.20
Sliding speed	max. 2 m/s
Temperature range	-195°C to + 280°C
Therm. conductivity	40 W/K · m

Recommended mounting tolerances
Housing bore H7, shaft tolerance up to 55 Ø f7 above 55 Ø h8

Paired contact surface
Recommended: hardened contact surfaces with a surface roughness of R_z3 and finer.

Main characteristics
Self lubricating and maintenance free, ready to install. Perfectly suited for lower sliding speeds. Low wear, low friction coefficient, no „stick slip". Perfectly suited for circular, swivelling and partly for axial movement. Can be used at extremely high bearing loads. No moisture absorption. High corrosion resistance.

Mounting instructions
The edges of the mounting hole must be rounded or chamfered. We recommend using an arbor press for mounting. The gliding surface must not be damaged. The butt joint must be located opposite the load area. Once mounted the bearing has pressfit. Glueing is possible, but not necessary.

Application range
Where no lubrication os possible: textile machinery, controls and instruments, packing plants, electronic goods, medical equipment, paper machines, food-processing machines, brake and pump manufacturing, etc.
Where lubrication is often neglected:
agricultural and construction machinery, fork lift trucks, etc.
Where lubricants should be used sparingly:
car and motorbike manufacture, machine tool building, conveyor plants, escalator manufacture, hoisting devices, turbine manufacturing, steel construction for hydraulic engineering, etc.

Service life
The service life of the bearing depends on ambient conditions as: sliding speed, load, temperature, on-time, paired contact surface, etc. For lower wear, please regard the load and mounting instructions above, and protect the bearing from corrosive influences and large amounts of dirt.

Bushes BP, Polyamide 6.6 Die Cast

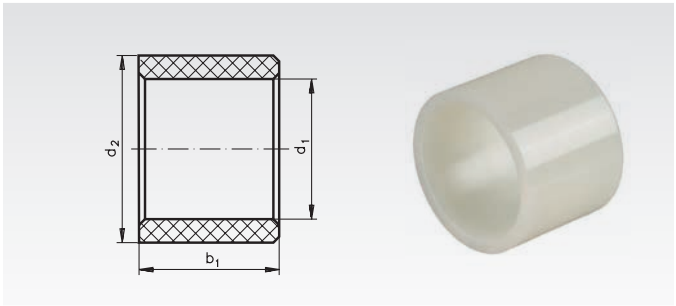

Plain bearing bush from low cost thermoplast. Low friction. Specially suited for simplier applications at normal temperatures.

Ordering Details: e.g.: Product No. 623 708 00, Bush BP, 8 mm Bore

Product No.	d_1 mm	Tolerance mm	Tolerance mm	d_2 mm	Tolerance mm	b_1 mm	Weight g
623 708 00	8	+0,06	+0,10	12	+0,10	10	1,0
623 709 00	8	+0,06	+0,10	14	+0,10	10	1,3
623 711 00	10	+0,08	+0,12	12	+0,10	10	0,5
623 712 00	10	+0,08	+0,12	14	+0,10	10	1,0
623 713 00	10	+0,08	+0,12	16	+0,12	10	1,5
623 715 00	12	+0,10	+0,14	14	+0,10	10	0,7
623 716 00	12	+0,10	+0,14	16	+0,12	10	1,0
623 717 00	12	+0,10	+0,14	18	+0,12	14	1,0
623 721 00	15	+0,12	+0,18	20	+0,12	15	2,5
623 722 00	15	+0,12	+0,18	22	+0,14	15	3,5
623 723 00	15	+0,12	+0,18	25	+0,14	15	5,5
623 725 00	16	+0,13	+0,19	20	+0,12	15	2,0
623 726 00	16	+0,13	+0,19	22	+0,14	15	3,2
623 727 00	16	+0,13	+0,19	24	+0,14	15	4,2
623 732 00	20	+0,16	+0,23	24	+0,14	15	2,5
623 733 00	20	+0,16	+0,23	25	+0,14	15	3,0
623 734 00	20	+0,16	+0,23	26	+0,14	20	5,0
623 735 00	20	+0,16	+0,23	28	+0,15	20	7,0
623 736 00	20	+0,16	+0,23	30	+0,15	20	9,0
623 740 00	25	+0,18	+0,25	30	+0,15	20	5,0
623 741 00	25	+0,18	+0,25	30	+0,15	32	7,8
623 742 00	25	+0,18	+0,25	32	+0,15	20	7,0
623 743 00	25	+0,18	+0,25	35	+0,18	20	10,5
623 746 00	28	+0,20	+0,28	32	+0,15	20	4,2
623 748 00	28	+0,20	+0,28	38	+0,18	19	11,2
623 750 00	30	+0,21	+0,30	35	+0,18	20	5,7
623 751 00	30	+0,21	+0,30	36	+0,18	30	10,5
623 752 00	30	+0,21	+0,30	40	+0,18	30	18,0
623 754 00	32	+0,22	+0,32	36	+0,18	30	7,5
623 755 00	32	+0,22	+0,32	40	+0,18	30	15,5
623 762 00	40	+0,24	+0,36	45	+0,20	40	14,5
623 763 00	40	+0,24	+0,36	48	+0,20	40	25,0
623 764 00	40	+0,24	+0,36	50	+0,20	40	32,0
623 768 00	50	+0,30	+0,43	56	+0,22	50	43,0
623 769 00	50	+0,30	+0,43	60	+0,22	50	48,5
623 771 00	54	+0,32	+0,46	62	+0,22	60	48,5
623 774 00	60	+0,34	+0,48	70	+0,24	60	68,0

Flanged Bushes BBP, Polyamide 6.6 Die Cast

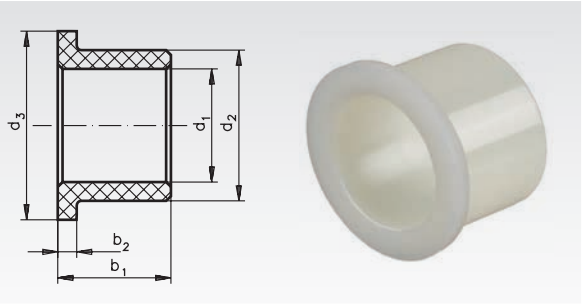

Plain bearing flange bush from low cost thermoplast. Low friction. Specially suited for simplier applications at normal temperatures.

Ordering Details: e.g.: Product No. 623 806 00, Flange Bush BBP, 6 mm Bore

Product No.	d_1 mm	Tolerance mm	Tolerance mm	d_2 mm	Tolerance mm	d_3 mm	b_2 mm	b_1 mm	Weight g
623 806 00	6	+0,06	+0,10	10	+0,10	15	1,5	8	0,8
623 808 00	8	+0,06	+0,10	12	+0,10	16	2	6	0,8
623 809 00	8	+0,06	+0,10	14	+0,10	20	2	10	1,7
623 811 00	10	+0,08	+0,12	12	+0,10	16	2	6	0,6
623 812 00	10	+0,08	+0,12	14	+0,10	20	2	10	1,3
623 813 00	10	+0,08	+0,12	16	+0,12	20	2	10	1,8
623 815 00	12	+0,10	+0,14	14	+0,10	20	2	10	1,0
623 816 00	12	+0,10	+0,14	16	+0,12	20	2	10	1,5
623 819 00	14	+0,11	+0,17	20	+0,12	30	2	24	2,8
623 825 00	16	+0,13	+0,19	20	+0,12	28	2	15	2,8
623 826 00	16	+0,13	+0,19	22	+0,14	30	2	15	4,0
623 827 00	16	+0,13	+0,19	24	+0,14	30	2	15	5,0
623 832 00	20	+0,16	+0,23	24	+0,14	30	2	15	3,0
623 833 00	20	+0,16	+0,23	25	+0,14	30	2	15	3,5
623 834 00	20	+0,16	+0,23	26	+0,14	30	2	12	3,5
623 835 00	20	+0,16	+0,23	26	+0,14	32	2	15	4,5
623 836 00	20	+0,16	+0,23	26	+0,14	32	3	20	5,8
623 837 00	20	+0,16	+0,23	30	+0,15	36	3	20	9,7
623 840 00	25	+0,18	+0,25	30	+0,15	36	3	20	6,0
623 841 00	25	+0,18	+0,25	32	+0,15	40	3	20	8,5
623 842 00	25	+0,18	+0,25	35	+0,18	45	3	20	12,7
623 843 00	25	+0,18	+0,25	35	+0,18	45	4	30	18,5
623 846 00	28	+0,20	+0,28	32	+0,15	40	4	30	8,0
623 848 00	28	+0,20	+0,28	38	+0,18	48	4	30	20,0
623 850 00	30	+0,21	+0,30	32	+0,15	40	4	30	5,0
623 851 00	30	+0,21	+0,30	35	+0,18	45	4	30	11,5
623 852 00	30	+0,21	+0,30	38	+0,18	48	4	30	17,0
623 854 00	32	+0,22	+0,32	35	+0,18	45	4	30	8,5
623 855 00	32	+0,22	+0,32	38	+0,18	48	4	30	18,5
623 856 00	32	+0,22	+0,32	40	+0,18	50	4	30	19,0
623 862 00	40	+0,24	+0,36	44	+0,20	54	5	40	16,5
623 863 00	40	+0,24	+0,36	48	+0,20	58	5	40	30,0
623 864 00	40	+0,24	+0,36	50	+0,20	60	5	40	36,0
623 868 00	50	+0,30	+0,43	56	+0,22	70	5	50	34,5
623 869 00	50	+0,30	+0,43	60	+0,22	70	5	50	52,0
623 874 00	60	+0,34	+0,48	70	+0,24	80	5	60	74,0

Description and technical data

Material: Thermoplastic polyamide 6.6.

- Low cost.
- Low friction, suitable for lubrication-free running.
- High moisture absorption, low dimension stability.

Typical for polyamide parts is the high moisture absorption. But if the bushes and flange bushings are conditioned, i.e. saturated with moisture before mounting, then usually dimensional changes due to the degree of moisture play a much smaller role than dimensional changes due to temperature.

Technical data:

Surface pressure max.:	18 N/mm², dependant on sliding speed and bearing temperature
Sliding Speed:	2 m/s
Lubrication:	usually not required
Bearing clearance:	about 0.01 mm per mm shaft-Ø
Bearing temperature:	-40°C up to +80°C.
Coefficient of linear expansion:	8 x 10^{-5}
Moisture absorption max.:	7.5%

Moisture absorption at 20°C and 50% rel. humidity: 2.4%

Mounting hole: tolerance H7.

Plain Bearings, Thermoplastic EP22™

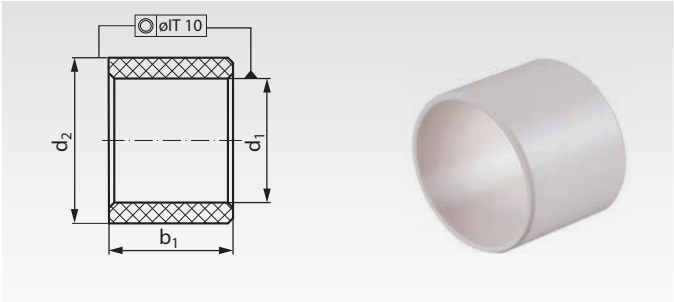

Plain bearing bush made from thermoplastic with high dimension accuracy. Low friction. Specially suited for dry-running and for use at very low up to middle high temperatures. Colour: white.

Ordering Details: e.g.: Product No. 627 208 06, Bush EP22, 8 mm Bore

Product No.	d_1 mm	d_2 mm	b_1^{h13} mm	Tolerance d_1* mm		Weight g
627 208 06	8	10	6	+0,025	+0,083	0,2
627 208 08	8	10	8	+0,025	+0,083	0,3
627 208 10	8	10	10	+0,025	+0,083	0,4
627 208 12	8	10	12	+0,025	+0,083	0,5
627 208 15	8	10	15	+0,025	+0,083	0,6
627 210 04	10	12	4	+0,025	+0,083	0,2
627 210 06	10	12	6	+0,025	+0,083	0,3
627 210 08	10	12	8	+0,025	+0,083	0,4
627 210 10	10	12	10	+0,025	+0,083	0,5
627 210 15	10	12	15	+0,025	+0,083	0,7
627 210 20	10	12	20	+0,025	+0,083	1,0
627 212 10	12	14	10	+0,032	+0,102	0,6
627 212 12	12	14	12	+0,032	+0,102	0,7
627 212 15	12	14	15	+0,032	+0,102	0,9
627 212 20	12	14	20	+0,032	+0,102	1,2
627 214 12	14	16	12	+0,032	+0,102	0,9
627 214 15	14	16	15	+0,032	+0,102	1,0
627 214 20	14	16	20	+0,032	+0,102	1,4
627 214 25	14	16	25	+0,032	+0,102	1,7
627 215 15	15	17	15	+0,032	+0,102	1,1
627 215 20	15	17	20	+0,032	+0,102	1,4
627 215 25	15	17	25	+0,032	+0,102	1,7
627 216 15	16	18	15	+0,032	+0,102	1,2
627 216 20	16	18	20	+0,032	+0,102	1,6
627 216 25	16	18	25	+0,032	+0,102	1,8
627 218 20	18	20	20	+0,032	+0,102	1,8
627 218 25	18	20	25	+0,032	+0,102	2,0
627 220 10	20	23	10	+0,040	+0,124	1,5
627 220 15	20	23	15	+0,040	+0,124	2,2
627 220 20	20	23	20	+0,040	+0,124	2,9
627 220 25	20	23	25	+0,040	+0,124	3,9
627 220 30	20	23	30	+0,040	+0,124	4,4
627 225 15	25	28	15	+0,040	+0,124	2,7
627 225 20	25	28	20	+0,040	+0,124	3,6
627 230 20	30	34	20	+0,040	+0,124	6,2
627 230 30	30	34	30	+0,040	+0,124	9,3
627 240 30	40	44	30	+0,050	+0,150	12,2
627 240 40	40	44	40	+0,050	+0,150	16,3
627 250 40	50	55	40	+0,050	+0,150	25,4
627 250 50	50	55	50	+0,050	+0,150	31,7
627 260 40	60	65	40	+0,050	+0,150	30,2
627 260 60	60	65	60	+0,050	+0,150	45,4

Flanged Plain Bearings, Thermoplastic EP22™

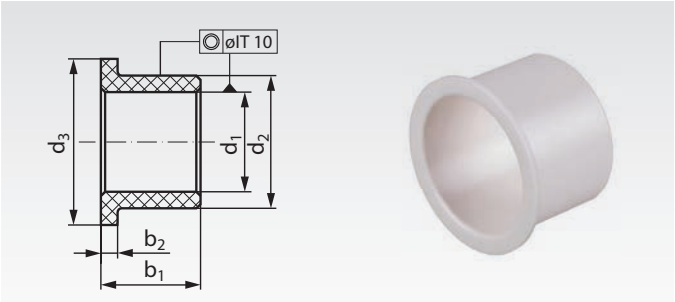

Plain bearing flange bush from thermoplastic with high dimension accuracy. Low friction. Specially suited for dry-running and for use at very low up to middle high temperatures. Colour: white.

Ordering Details: e.g.: Product No. 627 308 05, Flange Bush EP22, 8 mm Bore

Product No.	d_1 mm	d_2 mm	d_3 mm	b_1^{h13} mm	b_2^{h13} mm	Tolerance d_1* mm		Weight g
627 308 05	8	10	15	5,5	1,0	+0,025	+0,083	0,4
627 308 07	8	10	15	7,5	1,0	+0,025	+0,083	0,5
627 308 10	8	10	15	10	1,0	+0,025	+0,083	0,5
627 310 07	10	12	18	7	1,0	+0,025	+0,083	0,6
627 310 09	10	12	18	9	1,0	+0,025	+0,083	0,7
627 310 12	10	12	18	12	1,0	+0,025	+0,083	0,8
627 310 15	10	12	18	15	1,0	+0,025	+0,083	1,0
627 310 17	10	12	18	17	1,0	+0,025	+0,083	1,1
627 312 07	12	14	20	7	1,0	+0,032	+0,102	0,6
627 312 09	12	14	20	9	1,0	+0,032	+0,102	0,8
627 312 12	12	14	20	12	1,0	+0,032	+0,102	1,2
627 312 15	12	14	20	15	1,0	+0,032	+0,102	1,3
627 312 17	12	14	20	17	1,0	+0,032	+0,102	1,4
627 312 20	12	14	20	20	1,0	+0,032	+0,102	1,5
627 314 12	14	16	22	12	1,0	+0,032	+0,102	0,9
627 314 17	14	16	22	17	1,0	+0,032	+0,102	1,5
627 315 09	15	17	23	9	1,0	+0,032	+0,102	1,0
627 315 12	15	17	23	12	1,0	+0,032	+0,102	1,2
627 315 17	15	17	23	17	1,0	+0,032	+0,102	1,5
627 315 20	15	17	23	20	1,0	+0,032	+0,102	1,8
627 316 12	16	18	24	12	1,0	+0,032	+0,102	1,3
627 316 17	16	18	24	17	1,0	+0,032	+0,102	1,7
627 318 12	18	20	26	12	1,0	+0,032	+0,102	1,4
627 318 17	18	20	26	17	1,0	+0,032	+0,102	2,1
627 320 11	20	23	30	11,5	1,5	+0,040	+0,124	2,4
627 320 16	20	23	30	16,5	1,5	+0,040	+0,124	3,2
627 320 21	20	23	30	21,5	1,5	+0,040	+0,124	3,9
627 325 11	25	28	35	11,5	1,5	+0,040	+0,124	2,9
627 325 16	25	28	35	16,5	1,5	+0,040	+0,124	3,9
627 325 21	25	28	35	21,5	1,5	+0,040	+0,124	4,9
627 330 16	30	34	42	16	2,0	+0,040	+0,124	6,4
627 330 26	30	34	42	26	2,0	+0,040	+0,124	9,5
627 330 40	30	34	42	40	2,0	+0,040	+0,124	13,9
627 340 16	40	44	52	16	2,0	+0,050	+0,150	8,4
627 340 26	40	44	52	26	2,0	+0,050	+0,150	12,4
627 340 50	40	44	52	50	2,0	+0,050	+0,150	22,2
627 350 26	50	55	63	26	2,0	+0,050	+0,150	18,8
627 350 60	50	55	63	60	2,0	+0,050	+0,150	40,4
627 360 50	60	65	73	50	2,0	+0,050	+0,150	40,5
627 360 70	60	65	73	70	2,0	+0,050	+0,150	55,6

* After press-fitting in bore H7 (in toleranc center).

Description and technical data

Material: Thermoplast polybutylenterephthalat, modified (PBT + PTFE), white.

- Good price/perfomance ratio with high dimension accuracy
- Low friction, suitable also for lubrication-free running.
- Low Temperatures suited until -50°C.

Operating Conditions :
dry : very good.
oiled: good.
water: very good.

Field of application:
Domestic appliances, chemical equipment, office equipment, sports equipment, automotive (pedals, steering, axes), ...

Technical data:

Surface pressure:	max. 50 N/mm².
Sliding Speed:	max. 1,0 m/s.
pv-value for A_H/A_C=5	0,05 N/mm² x m/s.
pv-value for A_H/A_C=10	0,10 N/mm² x m/s.
pv-value for A_H/A_C=20	0,20 N/mm² x m/s.
Temperature range	-50°C to + 170°C.
Coefficient of friction	0,22 to 0,37 (dry).
Shaft surface finish	Ra 0,1 to 0,5 µm (ground).
Shaft hardness	> 200 HV.

Recommended mounting tolerances:
Housing bore H7, recommended shaft tolerance h9.

Plain Bearings, Thermoplastic EP43™

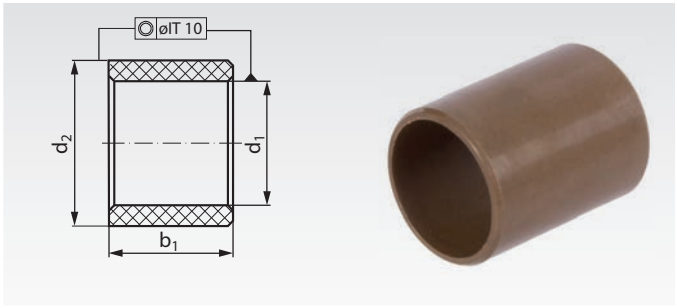

Plain bearing bush made from high sophisticated thermoplastic. Very low friction. Specially suited for dry-running and for use under water and at high temperatures. Colour: brown.

Ordering Details: e.g.: Product No. 627 008 06, Bush EP43, 8 mm Bore

Product No.	d_1 mm	d_2 mm	b_1^{h13} mm	Tolerance d_1* mm		Weight g
627 008 06	8	10	6	+0,013	+0,071	0,2
627 008 08	8	10	8	+0,013	+0,071	0,3
627 008 10	8	10	10	+0,013	+0,071	0,4
627 008 12	8	10	12	+0,013	+0,071	0,5
627 008 15	8	10	15	+0,013	+0,071	0,6
627 010 04	10	12	4	+0,013	+0,071	0,2
627 010 06	10	12	6	+0,013	+0,071	0,3
627 010 08	10	12	8	+0,013	+0,071	0,4
627 010 10	10	12	10	+0,013	+0,071	0,5
627 010 15	10	12	15	+0,013	+0,071	0,7
627 010 20	10	12	20	+0,013	+0,071	1,0
627 012 10	12	14	10	+0,016	+0,086	0,6
627 012 12	12	14	12	+0,016	+0,086	0,7
627 012 15	12	14	15	+0,016	+0,086	0,9
627 012 20	12	14	20	+0,016	+0,086	1,2
627 014 15	14	16	15	+0,016	+0,086	1,0
627 014 20	14	16	20	+0,016	+0,086	1,4
627 014 25	14	16	25	+0,016	+0,086	1,7
627 015 15	15	17	15	+0,016	+0,086	1,1
627 015 20	15	17	20	+0,016	+0,086	1,4
627 015 25	15	17	25	+0,016	+0,086	1,7
627 020 15	20	23	15	+0,020	+0,104	2,2
627 020 20	20	23	20	+0,020	+0,104	2,9
627 020 30	20	23	30	+0,020	+0,104	4,4
627 025 15	25	28	15	+0,020	+0,104	2,7
627 025 20	25	28	20	+0,020	+0,104	3,6

* After press-fitting in bore H7 (in toleranc center).

Flanged Plain Bearings, Thermoplastic EP43™

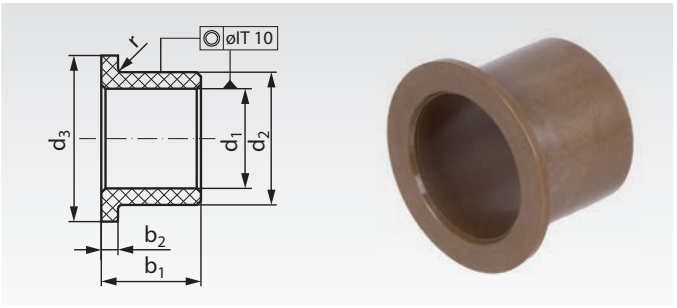

Plain bearing flange bush from high sophisticated thermoplastic. Very low friction. Specially suited for dry-running and for use under water and at high temperatures. Colour: brown.

Ordering Details: e.g.: Product No. 627 108 05, Flange Bush EP43, 8 mm Bore

Product No.	d_1 mm	d_2 mm	d_3 mm	b_1^{h13} mm	b_2^{h13} mm	r mm	Tolerance d_1* mm		Weight g
627 108 05	8	10	15	5,5	1,0	0,3	+0,013	+0,071	0,4
627 108 07	8	10	15	7,5	1,0	0,3	+0,013	+0,071	0,5
627 108 10	8	10	15	10	1,0	0,3	+0,013	+0,071	0,5
627 110 07	10	12	18	7	1,0	0,3	+0,013	+0,071	0,6
627 110 09	10	12	18	9	1,0	0,3	+0,013	+0,071	0,7
627 110 12	10	12	18	12	1,0	0,3	+0,013	+0,071	0,8
627 110 15	10	12	18	15	1,0	0,3	+0,013	+0,071	1,0
627 110 17	10	12	18	17	1,0	0,3	+0,013	+0,071	1,1
627 112 07	12	14	20	7	1,0	0,3	+0,016	+0,086	0,6
627 112 09	12	14	20	9	1,0	0,3	+0,016	+0,086	0,8
627 112 12	12	14	20	12	1,0	0,3	+0,016	+0,086	1,2
627 112 15	12	14	20	15	1,0	0,3	+0,016	+0,086	1,3
627 112 17	12	14	20	17	1,0	0,3	+0,016	+0,086	1,4
627 112 20	12	14	20	20	1,0	0,3	+0,016	+0,086	1,5
627 114 12	14	16	22	12	1,0	0,3	+0,016	+0,086	0,9
627 114 17	14	16	22	17	1,0	0,3	+0,016	+0,086	1,5
627 115 09	15	17	23	9	1,0	0,3	+0,016	+0,086	1,0
627 115 12	15	17	23	12	1,0	0,3	+0,016	+0,086	1,2
627 115 17	15	17	23	17	1,0	0,3	+0,016	+0,086	1,5
627 115 20	15	17	23	20	1,0	0,3	+0,016	+0,086	1,8
627 116 17	16	18	24	17	1,0	0,3	+0,016	+0,086	1,7
627 120 11	20	23	30	11,5	1,5	0,5	+0,020	+0,104	2,4
627 120 16	20	23	30	16,5	1,5	0,5	+0,020	+0,104	3,2
627 120 21	20	23	30	21,5	1,5	0,5	+0,020	+0,104	3,9
627 125 11	25	28	35	11,5	1,5	0,5	+0,020	+0,104	2,9
627 125 16	25	28	35	16,5	1,5	0,5	+0,020	+0,104	3,9
627 125 21	25	28	35	21,5	1,5	0,5	+0,020	+0,104	4,9

* After press-fitting in bore H7 (in toleranc center).

Description and technical data

Material: Thermoplast polyphenylensulfid, reinforced, modified (PPS + PTFE + aramid), brown.

- Good chemical and hydrolysis resistance.
- Low friction, optimised for dry running conditions.
- High dimensional stability.

Operating Conditions :
dry : very good.
oiled: good.
water: very good.

field of application:

Domestic appliances, convoyers, machinery, cash slot machines and many more.

Technical data:

Surface pressure.:	max. 83 N/mm².
Sliding Speed:	max. 1,0 m/s.
pv-value for A_H/A_C=5	0,22 N/mm² x m/s.
pv-value for A_H/A_C=10	0,90 N/mm² x m/s
pv-value for A_H/A_C=20	3,59 N/mm² x m/s .
Temperature range	-40°C to + 240°C.
Coefficient of friction	0,11 to 0,20 (dry).
Shaft surface finish	Ra 0,2 to 0,8 µm (ground).
Shaft hardness	> 200 HV.

Recommended mounting tolerances:

Housing bore H7, recommended shaft tolerance h9.

Cylindrical Drill Bushes similar to the old Standard DIN 179, Design A

Material: 1.0718
Hardened, ground to tolerance inside and outside.

Hardness: 740+80 HV10 (60+4 HRC).

Bore rounded at edge.
Mounting hole: tolerance H7.

Other dimensions and designs on request.

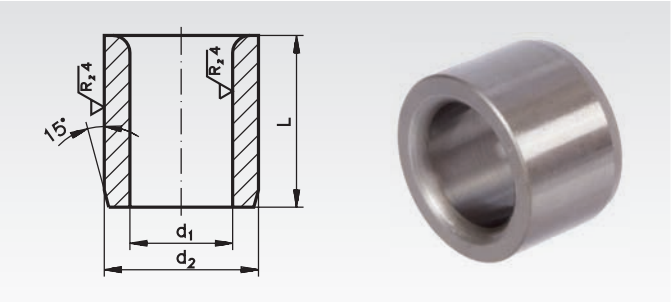

Ordering Details: e.g.: Product No. 622 204 08, Cylindrical Drill Bushes 4 x 8 mm

Product No.	d_1 F7 mm	d_2 n6 mm	L mm	Weight g
622 204 08	4	7	8	1,6
622 204 12	4	7	12	2,3
622 205 08	5	8	8	1,9
622 205 12	5	8	12	2,8
622 206 10	6	10	10	4,0
622 206 16	6	10	16	6,1
622 208 10	8	12	10	4,8
622 208 16	8	12	16	7,7
622 210 12	10	15	12	9,0
622 210 20	10	15	20	15,0
622 212 12	12	18	12	13,0
622 212 20	12	18	20	22,0
622 213 16	13	22	16	30,0
622 214 16	14	22	16	27,0
622 214 28	14	22	28	49,0
622 215 16	15	22	16	25,0
622 215 28	15	22	28	44,0
622 216 16	16	26	16	40,0
622 216 28	16	26	28	71,0
622 218 16	18	26	16	34,0
622 218 28	18	26	28	60,0
622 220 20	20	30	20	60,0
622 222 20	22	30	20	50,0
622 225 20	25	35	20	72,0
622 230 25	30	42	25	130,0

Loctite bonding products (bearing adhesive) page 812.

Cylindrical, Flanged Drill Bushes similar to the old Standard DIN 172, Design A

Material: 1.0718
Hardened, ground to tolerance inside and outside.

Hardness: 740+80 HV10 (60+4 HRC).

Bore rounded at flange side.
Mounting hole: tolerance H7.

Other dimensions and designs on request.

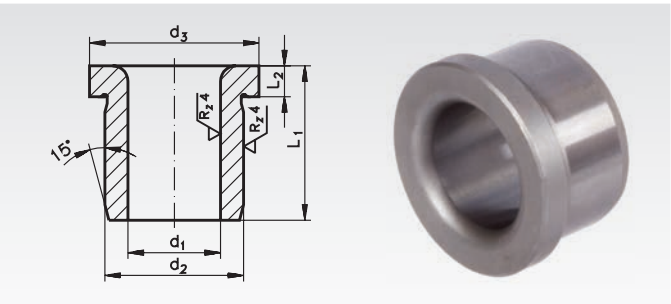

Ordering Details: e.g.: Product No. 622 104 08, Flanged Drill Bushes 4 x 8 mm

Product No.	d_1 F7 mm	d_2 n6 mm	d_3 mm	L_2 mm	L_1 mm	Weight g
622 104 08	4	7	10	2,5	8	2,3
622 104 12	4	7	10	2,5	12	3,1
622 105 08	5	8	11	2,5	8	2,6
622 105 12	5	8	11	2,5	12	3,6
622 106 10	6	10	13	3,0	10	5,0
622 106 16	6	10	13	3,0	16	7,4
622 108 10	8	12	15	3,0	10	6,1
622 108 16	8	12	15	3,0	16	9,0
622 110 12	10	15	18	3,0	12	10,7
622 110 20	10	15	18	3,0	20	16,7
622 112 12	12	18	22	4,0	12	16,5
622 112 20	12	18	22	4,0	20	25,3
622 115 16	15	22	26	4,0	16	29,0
622 116 16	16	26	30	4,0	16	46,0
622 118 16	18	26	30	4,0	16	39,0
622 120 20	20	30	34	5,0	20	67,0
622 122 20	22	30	34	5,0	20	57,0
622 126 20	26	35	39	5,0	20	74,0

Loctite bonding products (bearing adhesive) page 812.

Shaft Collars with Set Screw (Adjusting Rings) According to the Old Standard DIN 703

Material: Steel, blank.
Steel, zinc-plated.
Stainless steel 1.4305.

Heavy-duty series. With allen set screw made from steel / steel zinc-plated like DIN EN ISO 4027, but strength 12.9 or stainless steel A2. From size d_1=70mm with 2 set screws, with offset 135°.

Blank turned and kalibrated. Bores tolerance H8.
Large chamfer on one side of the outside diameter.

Temperature range: -40°C to +175°C.

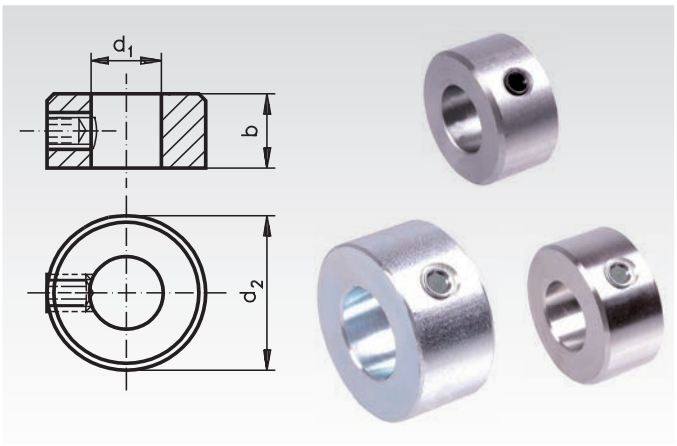

Ordering Details: e.g.: Product No. 623 220 00, Collar DIN 703, 20 mm Bore

Product No. Steel blank	Product No. Steel zinc-plated	Product No. Stainless Steel	d_1 mm	d_2 mm	b mm	Screw mm	Weight kg p.%
623 220 00	**623 882 20**	**623 992 20**	20	40	20	M8	14,6
623 225 00	**623 882 25**	**623 992 25**	25	56	22	M10	33,8
623 230 00	**623 882 30**	**623 992 30**	30	63	22	M10	41,5
623 235 00	**623 882 35**	**623 992 35**	35	70	22	M10	49,6
623 240 00	**623 882 40**	**623 992 40**	40	80	28	M12	82,7
623 245 00	**623 882 45**	**623 992 45**	45	80	28	M12	75,3
623 250 00	**623 882 50**	**623 992 50**	50	90	28	M12	96,3
623 255 00	**623 882 55**	**623 992 55**	55	90	28	M12	87,1
623 260 00	**623 882 60**	**623 992 60**	60	100	28	M12	110,0
623 265 00	**623 882 65**	**623 992 65**	65	100	28	M12	99,6
623 270 00	**623 882 70**	**623 992 70**	70	110	32	M16	141
623 275 00	**623 882 75**	**623 992 75**	75	110	32	M16	127
623 280 00	**623 882 80**	**623 992 80**	80	125	32	M16	181
623 285 00	**623 882 85**	**623 992 85**	85	125	32	M16	165
623 290 00	**623 882 90**	**623 992 90**	90	125	32	M16	148

* Size 20 is not part of the old standard DIN 703.

Other sizes and inch-sizes on request.

Shaft Collars with Set Screw (Adjusting Rings) DIN 705 A

Material: Steel, blank.
Steel, burnished.
Steel, zinc-plated.
Stainless steel 1.4305.

STAINLESS

Light-duty series. With set screw made from steel, steel zinc-plated or stainless steel. Up to size d_1=70mm with one slotted screw, DIN EN 27434. From size d_1=80mm with 2 allen screws like DIN EN ISO 4027, but strength 12.9, with offset 135°.

Blank turned and kalibrated. Bores tolerance H8. Large chamfer on one side of the outside diameter.

Temperature range: -40°C to +175°C.

Ordering Details: e.g.: Product No. 623 003 00, Collar DIN 705 A, 3 mm Bore

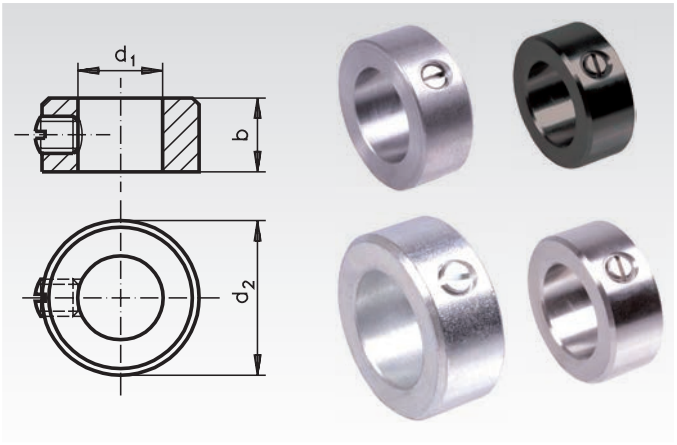

Product No. Steel blank	Product No. Steel burnished	Product No. Steel zinc-plated	Product No. Stainless steel	d_1 mm	d_2 mm	b mm	Screw mm	Weight kg p.%
623 003 00	623 890 03	623 880 03	-	3	7	5	M2	0,123
623 004 00	623 890 04	623 880 04	623 990 04	4	8	5	M2,5	0,145
623 005 00	623 890 05	623 880 05	623 990 05	5	10	6	M3	0,280
623 006 00	623 890 06	623 880 06	623 990 06	6	12	8	M4	0,548
623 007 00	623 890 07	623 880 07	623 990 07	7	12	8	M4	0,488
623 008 00	623 890 08	623 880 08	623 990 08	8	16	8	M4	0,940
623 009 00*	623 890 09*	623 880 09*	623 990 09*	9	18*	10*	M5	1,51
623 010 00	623 890 10	623 880 10	623 990 10	10	20	10	M5	1,85
623 012 00	623 890 12	623 880 12	623 990 12	12	22	12	M6	2,52
623 014 00	623 890 14	623 880 14	623 990 14	14	25	12	M6	3,17
623 015 00	623 890 15	623 880 15	623 990 15	15	25	12	M6	2,98
623 016 00	623 890 16	623 880 16	623 990 16	16	28	12	M6	3,84
623 018 00	623 890 18	623 880 18	623 990 18	18	32	14	M6	6,00
623 020 00	623 890 20	623 880 20	623 990 20	20	32	14	M6	5,30
623 022 00	623 890 22	623 880 22	623 990 22	22	36	14	M6	6,90
623 025 00	623 890 25	623 880 25	623 990 25	25	40	16	M8	9,56
623 030 00	623 890 30	623 880 30	623 990 30	30	45	16	M8	11,1
623 035 00	623 890 35	623 880 35	623 990 35	35	56	16	M8	18,7
623 040 00	623 890 40	623 880 40	623 990 40	40	63	18	M10	26,1
623 045 00	623 890 45	623 880 45	623 990 45	45	70	18	M10	31,7
623 050 00	623 890 50	623 880 50	623 990 50	50	80	18	M10	42,9
623 055 00	623 890 55	623 880 55	623 990 55	55	80	18	M10	37,3
623 060 00	623 890 60	623 880 60	-	60	90	20	M10	55,2
623 065 00	623 890 65	623 880 65	-	65	100	20	M10	70,8
623 070 00	623 890 70	623 880 70	-	70	100	20	M10	62,6
623 080 00	623 890 80	623 880 80	-	80	110	22	M12	76,8
623 090 00	623 890 90	623 880 90	-	90	125	22	M12	101,0
623 100 00	623 891 00	623 881 00	-	100	140	25	M12	147,0

* At size 9, the outer dimensions are not like DIN 705.

Other sizes and inch-sizes on request.

Shaft Collars, Clamp Collars Single-Split

Material: - Steel C45 burnished or zinc-plated, Screw steel 12.9.
- Stainless steel 1.4305, Screw stainless steel A2-70.
- Aluminium or aluminium anodized, screw stainless steel A2-70.

Features: does not damage the shaft, stronger clamping force than with set collars, even distribution of clamping forces, easy readjustment, precision honed bores.
The threads of the screws DIN 912 are covered with a layer of nylon.

Tolerance b: +0.08 mm
-0.25 mm

Temperature range: -40°C to +175°C.

Ordering Details: e.g.: Product No. 623 103 00, Clamp Collar, 3 mm Bore

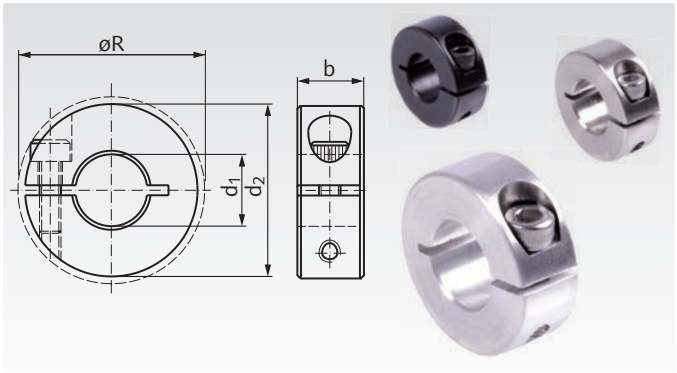

Product No. Steel burnished	Product No. Steel zinc-plated	Product No. Stainless steel	Product No. Aluminium	Product No. Alu anodized	d_1 mm	d_2 mm	$R_{max.}$ mm	b mm	Screws DIN912	Weight Steel g	Weight Aluminium g
623 103 00	**623 881 03**	**623 991 03**	**623 661 03**	**623 671 03**	3	16	20,7	9	M3 x 8	11	4
623 104 00	**623 881 04**	**623 991 04**	**623 661 04**	**623 671 04**	4	16	20,7	9	M3 x 8	11	4
623 105 00	**623 881 05**	**623 991 05**	**623 661 05**	**623 671 05**	5	16	20,7	9	M3 x 8	10	4
623 106 00	**623 881 06**	**623 991 06**	**623 661 06**	**623 671 06**	6	16	20,7	9	M3 x 8	10	4
623 107 00	**623 881 07**	**623 991 07**	**623 661 07**	**623 671 07**	7	18	22,4	9	M3 x 8	13	5
623 108 00	**623 881 08**	**623 991 08**	**623 661 08**	**623 671 08**	8	18	22,4	9	M3 x 8	12	5
623 109 00	**623 881 09**	**623 991 09**	**623 661 09**	**623 671 09**	9	24	26,0	9	M3 x 8	23	8
623 110 00	**623 881 10**	**623 991 10**	**623 661 10**	**623 671 10**	10	24	26,0	9	M3 x 8	22	8
623 111 00	**623 881 11**	**623 991 11**	**623 661 11**	**623 671 11**	11	28	31,8	11	M4 x 12	39	14
623 112 00	**623 881 12**	**623 991 12**	**623 661 12**	**623 671 12**	12	28	31,8	11	M4 x 12	38	13
623 113 00	**623 881 13**	**623 991 13**	**623 661 13**	**623 671 13**	13	30	33,9	11	M4 x 12	43	15
623 114 00	**623 881 14**	**623 991 14**	**623 661 14**	**623 671 14**	14	30	33,9	11	M4 x 12	42	15
623 115 00	**623 881 15**	**623 991 15**	**623 661 15**	**623 671 15**	15	34	39,4	13	M5 x 14	65	23
623 116 00	**623 881 16**	**623 991 16**	**623 661 16**	**623 671 16**	16	34	39,4	13	M5 x 14	63	22
623 117 00	**623 881 17**	**623 991 17**	**623 661 17**	**623 671 17**	17	36	41,2	13	M5 x 14	72	25
623 118 00	**623 881 18**	**623 991 18**	**623 661 18**	**623 671 18**	18	36	41,2	13	M5 x 14	69	24
623 119 00	**623 881 19**	**623 991 19**	**623 661 19**	**623 671 19**	19	40	46,4	15	M5 x 14	100	35
623 120 00	**623 881 20**	**623 991 20**	**623 661 20**	**623 671 20**	20	40	46,4	15	M6 x 16	97	34
623 121 00	**623 881 21**	**623 991 21**	**623 661 21**	**623 671 21**	21	42	48,1	15	M6 x 16	107	37
623 122 00	**623 881 22**	**623 991 22**	**623 661 22**	**623 671 22**	22	42	48,1	15	M6 x 16	103	36
623 123 00	**623 881 23**	**623 991 23**	**623 661 23**	**623 671 23**	23	45	50,8	15	M6 x 16	122	42
623 124 00	**623 881 24**	**623 991 24**	**623 661 24**	**623 671 24**	24	45	50,8	15	M6 x 16	117	40
623 125 00	**623 881 25**	**623 991 25**	**623 661 25**	**623 671 25**	25	45	50,8	15	M6 x 16	114	40
623 126 00	**623 881 26**	**623 991 26**	**623 661 26**	**623 671 26**	26	48	53,7	15	M6 x 18	133	46
623 128 00	**623 881 28**	**623 991 28**	**623 661 28**	**623 671 28**	28	48	53,7	15	M6 x 18	123	43
623 130 00	**623 881 30**	**623 991 30**	**623 661 30**	**623 671 30**	30	54	58,6	15	M6 x 18	163	56
623 132 00	**623 881 32**	**623 991 32**	**623 661 32**	**623 671 32**	32	54	58,6	15	M6 x 18	156	54
623 134 00	**623 881 34**	**623 991 34**	**623 661 34**	**623 671 34**	34	57	61,6	15	M6 x 18	174	60
623 135 00	**623 881 35**	**623 991 35**	**623 661 35**	**623 671 35**	35	57	61,6	15	M6 x 18	171	59
623 136 00	**623 881 36**	**623 991 36**	**623 661 36**	**623 671 36**	36	57	61,6	15	M6 x 18	163	56
623 138 00	**623 881 38**	**623 991 38**	**623 661 38**	**623 671 38**	38	60	65,0	15	M6 x 18	178	61
623 140 00	**623 881 40**	**623 991 40**	**623 661 40**	**623 671 40**	40	60	65,0	15	M6 x 18	163	56
623 142 00	**623 881 42**	**623 991 42**	**623 661 42**	**623 671 42**	42	73	79,4	19	M8 x 25	367	127
623 145 00	**623 881 45**	**623 991 45**	**623 661 45**	**623 671 45**	45	73	79,4	19	M8 x 25	344	119
623 148 00	**623 881 48**	**623 991 48**	**623 661 48**	**623 671 48**	48	78	84,2	19	M8 x 25	392	135
623 150 00	**623 881 50**	**623 991 50**	**623 661 50**	**623 671 50**	50	78	84,2	19	M8 x 25	370	128
623 155 00	**623 881 55**	**623 991 55**	-	-	55	82	88,8	19	M8 x 25	380	-
623 160 00	**623 881 60**	**623 991 60**	-	-	60	88	94,0	19	M8 x 25	425	-
623 165 00	**623 881 65**	**623 991 65**	-	-	65	93	99,8	19	M8 x 25	450	-
623 170 00	**623 881 70**	**623 991 70**	-	-	70	98	104,5	19	M8 x 25	480	-
623 175 00	**623 881 75**	**623 991 75**	-	-	75	103	109,1	19	M8 x 25	510	-
623 180 00	**623 881 80**	**623 991 80**	-	-	80	108	113,8	19	M8 x 25	535	-
623 190 00	**623 881 90**	**623 991 90**	-	-	90	130	138,1	32	M12 x 30	1730	-
623 200 00	**623 882 00**	**623 992 00**	-	-	100	140	147,6	32	M12 x 30	1890	-

Shaft Collars, Clamp Collars Double-Split

Material: - Steel C45 burnished or zinc-plated, Screws steel 12.9.
- Stainless steel 1.4305, Screws stainless steel A2-70.
- Aluminium or aluminium anodized, screws stainless steel A2-70.

Features: does not damage the shaft, stronger clamping force than with set collars, even distribution of clamping forces, easy readjustment, precision honed bores.
The threads of the screws DIN 912 are covered with a layer of nylon.

Tolerance b: +0.08 mm
-0.25 mm

Temperature range: -40°C to +175°C.

Ordering Details: e.g.: Product No. 623 403 00, Double-split Clamp Collar, 3 mm Bore

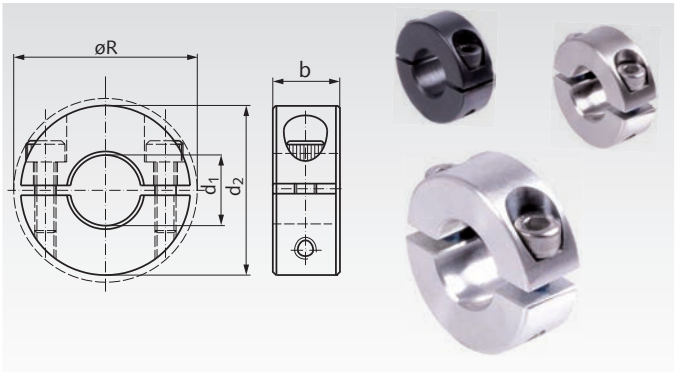

Product No. Steel burnished	Product No. Steel zinc-plated	Product No. Stainless steel	Product No. Aluminium	Product No. Alu anodized	d_1 mm	d_2 mm	$R_{max.}$ mm	b mm	Screws DIN912	Weight Steel g	Weight Aluminium g
623 403 00	623 884 03	623 994 03	623 664 03	623 674 03	3	16	20,7	9	M3 x 8	12	4
623 404 00	623 884 04	623 994 04	623 664 04	623 674 04	4	16	20,7	9	M3 x 8	11	4
623 405 00	623 884 05	623 994 05	623 664 05	623 674 05	5	16	20,7	9	M3 x 8	11	4
623 406 00	623 884 06	623 994 06	623 664 06	623 674 06	6	16	20,7	9	M3 x 8	10	3
623 407 00	623 884 07	623 994 07	623 664 07	623 674 07	7	18	22,4	9	M3 x 8	13	4
623 408 00	623 884 08	623 994 08	623 664 08	623 674 08	8	18	22,4	9	M3 x 8	12	4
623 409 00	623 884 09	623 994 09	623 664 09	623 674 09	9	24	26,0	9	M3 x 10	25	9
623 410 00	623 884 10	623 994 10	623 664 10	623 674 10	10	24	26,0	9	M3 x 10	24	8
623 411 00	623 884 11	623 994 11	623 664 11	623 674 11	11	28	31,8	11	M4 x 12	40	14
623 412 00	623 884 12	623 994 12	623 664 12	623 674 12	12	28	31,8	11	M4 x 12	39	13
623 413 00	623 884 13	623 994 13	623 664 13	623 674 13	13	30	33,9	11	M4 x 14	45	16
623 414 00	623 884 14	623 994 14	623 664 14	623 674 14	14	30	33,9	11	M4 x 14	43	15
623 415 00	623 884 15	623 994 15	623 664 15	623 674 15	15	34	39,4	13	M5 x 16	68	23
623 416 00	623 884 16	623 994 16	623 664 16	623 674 16	16	34	39,4	13	M5 x 16	65	22
623 417 00	623 884 17	623 994 17	623 664 17	623 674 17	17	36	41,2	13	M5 x 16	74	26
623 418 00	623 884 18	623 994 18	623 664 18	623 674 18	18	36	41,2	13	M5 x 16	71	24
623 419 00	623 884 19	623 994 19	623 664 19	623 674 19	19	40	46,4	15	M6 x 16	104	36
623 420 00	623 884 20	623 994 20	623 664 20	623 674 20	20	40	46,4	15	M6 x 16	101	35
623 421 00	623 884 21	623 994 21	623 664 21	623 674 21	21	42	48,1	15	M6 x 16	113	39
623 422 00	623 884 22	623 994 22	623 664 22	623 674 22	22	42	48,1	15	M6 x 16	107	37
623 423 00	623 884 23	623 994 23	623 664 23	623 674 23	23	45	50,8	15	M6 x 16	127	44
623 424 00	623 884 24	623 994 24	623 664 24	623 674 24	24	45	50,8	15	M6 x 16	122	42
623 425 00	623 884 25	623 994 25	623 664 25	623 674 25	25	45	50,8	15	M6 x 16	120	41
623 426 00	623 884 26	623 994 26	623 664 26	623 674 26	26	48	53,7	15	M6 x 16	139	48
623 428 00	623 884 28	623 994 28	623 664 28	623 674 28	28	48	53,7	15	M6 x 16	128	44
623 430 00	623 884 30	623 994 30	623 664 30	623 674 30	30	54	58,6	15	M6 x 18	171	59
623 432 00	623 884 32	623 994 32	623 664 32	623 674 32	32	54	58,6	15	M6 x 18	161	56
623 434 00	623 884 34	623 994 34	623 664 34	623 674 34	34	57	61,6	15	M6 x 18	181	62
623 435 00	623 884 35	623 994 35	623 664 35	623 674 35	35	57	61,6	15	M6 x 18	172	60
623 436 00	623 884 36	623 994 36	623 664 36	623 674 36	36	57	61,6	15	M6 x 18	169	59
623 438 00	623 884 38	623 994 38	623 664 38	623 674 38	38	60	65,0	15	M6 x 18	183	63
623 440 00	623 884 40	623 994 40	623 664 40	623 674 40	40	60	65,0	15	M6 x 18	172	59
623 442 00	623 884 42	623 994 42	623 664 42	623 674 42	42	73	79,4	19	M8 x 25	383	132
623 445 00	623 884 45	623 994 45	623 664 45	623 674 45	45	73	79,4	19	M8 x 25	360	124
623 448 00	623 884 48	623 994 48	623 664 48	623 674 48	48	78	84,2	19	M8 x 25	414	143
623 450 00	623 884 50	623 994 50	623 664 50	623 674 50	50	78	84,2	19	M8 x 25	386	133
623 455 00	623 884 55	623 994 55	-	-	55	82	88,8	19	M8 x 25	395	-
623 460 00	623 884 60	623 994 60	-	-	60	88	94,0	19	M8 x 25	440	-
623 465 00	623 884 65	623 994 65	-	-	65	93	99,8	19	M8 x 25	465	-
623 470 00	623 884 70	623 994 70	-	-	70	98	104,5	19	M8 x 25	495	-
623 475 00	623 884 75	623 994 75	-	-	75	103	109,1	19	M8 x 25	525	-
623 480 00	623 884 80	623 994 80	-	-	80	108	113,8	19	M8 x 25	550	-
623 490 00	623 884 90	623 994 90	-	-	90	130	138,1	32	M12 x 30	1730	-
623 500 00	623 885 00	623 995 00	-	-	100	140	147,6	32	M12 x 30	1890	-

Shaft Collars, Clamp Collars Double Wide, Single-Split

Material: Steel C45 burnished, screws steel 12.9.
Stainless steel 1.4305,
screws stainless steel A2-70.

Features: does not damage the shaft, stronger clamping force than with set collars, even distribution of clamping forces, easy readjustment, precision honed bores.
The threads of the screws DIN 912 are covered with a layer of nylon.

Tolerance b: +0.08 mm
-0.25 mm

Temperature range: -40°C to +175°C.

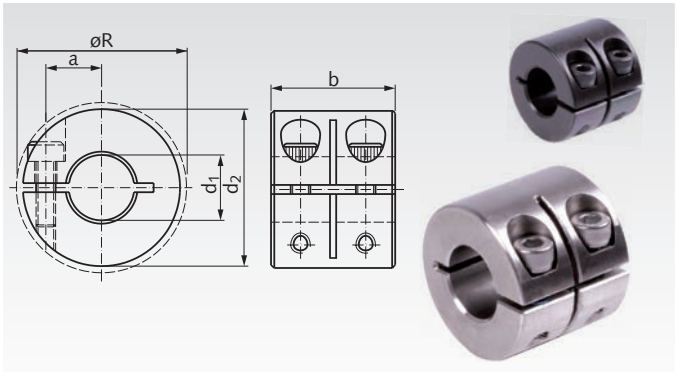

Ordering Details: e.g.: Product No. 624 106 00, Clamp Collar, 6mm

Product No. Steel	Product No. Stainless Steel	d_1 mm	d_2 mm	R mm	b mm	a mm	Screw DIN 912	Tighting Torque Steel Nm	Tighting Torque Stainless steel Nm	Weight g
624 106 00	**624 991 06**	$6^{+0,05}$	16	20,1	20	5,2	M3 x 8	2,1	1,1	20
624 108 00	**624 991 08**	$8^{+0,07}$	18	21,3	20	6,0	M3 x 8	2,1	1,1	24
624 110 00	**624 991 10**	$10^{+0,07}$	24	25,6	20	8,5	M3 x 8	2,1	1,1	48
624 112 00	**624 991 12**	$12^{+0,07}$	28	31,7	24	10,0	M4 x 12	4,6	2,5	78
624 116 00	**624 991 16**	$16^{+0,07}$	34	38,5	29	12,0	M5 x 14	9,5	5,4	130
624 120 00	**624 991 20**	$20^{+0,07}$	40	46,3	33	14,5	M6 x 16	16	9,6	202
624 125 00	**624 991 25**	$25^{+0,07}$	45	50,6	33	17,0	M6 x 16	16	9,6	240
624 130 00	**624 991 30**	$30^{+0,12}$	54	58,6	33	21,5	M6 x 18	16	9,6	342
624 140 00	**624 991 40**	$40^{+0,12}$	60	65,0	33	25,0	M6 x 18	16	9,6	344
624 150 00	**624 991 50**	$50^{+0,12}$	78	84,2	41	32,0	M8 x 25	17	13,6	772

Shaft Collars, Clamp Collars Double Wide, Double-Split

Material: Steel C45 burnished, screws steel 12.9.
Stainless steel 1.4305,
screws stainless steel A2-70.

Features: does not damage the shaft, stronger clamping force than with set collars, even distribution of clamping forces, easy readjustment, precision honed bores.
The threads of the screws DIN 912 are covered with a layer of nylon.

Tolerance b: +0.08 mm
-0.25 mm

Temperature range: -40°C to +175°C.

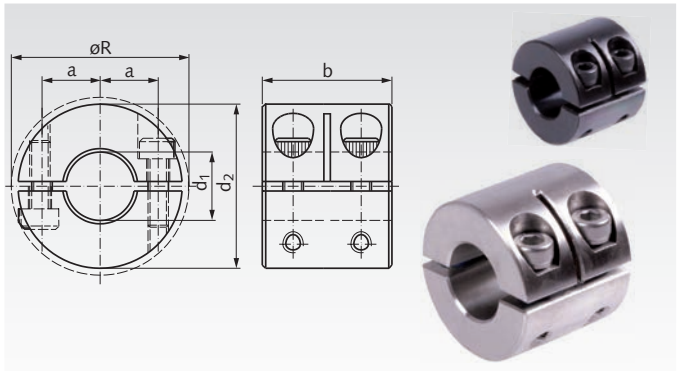

Ordering Details: e.g.: Product No. 624 406 00, Clamp Collar, 6mm

Product-No. Steel	Product-No. Stainless Steel	d_1 mm	d_2 mm	R mm	b mm	a mm	Screw DIN 912	Tighting Torque Steel Nm	Tighting Torque Stainless steel Nm	Weight g
624 406 00	**624 994 06**	$6^{+0,05}$	16	20,1	20	5,2	M3 x 8	2,1	1,1	20
624 408 00	**624 994 08**	$8^{+0,07}$	18	21,3	20	6,0	M3 x 8	2,1	1,1	24
624 410 00	**624 994 10**	$10^{+0,07}$	24	25,6	20	8,5	M3 x 8	2,1	1,1	44
624 412 00	**624 994 12**	$12^{+0,07}$	28	31,7	24	10,0	M4 x 12	4,6	2,5	76
624 416 00	**624 994 16**	$16^{+0,07}$	34	38,5	29	12,0	M5 x 14	9,5	5,4	126
624 420 00	**624 994 20**	$20^{+0,07}$	40	46,3	33	14,5	M6 x 16	16	9,6	194
624 425 00	**624 994 25**	$25^{+0,07}$	45	50,6	33	17,0	M6 x 16	16	9,6	228
624 430 00	**624 994 30**	$30^{+0,12}$	54	58,6	33	21,5	M6 x 18	16	9,6	326
624 440 00	**624 994 40**	$40^{+0,12}$	60	65,0	33	25,0	M6 x 18	16	9,6	326
624 450 00	**624 994 50**	$50^{+0,12}$	78	84,2	41	32,0	M8 x 25	17	13,6	740

Remarks to collars from steel

The black oxide on the clamping collars is formulated as part of the total performance of the product. It enhances the holding ability of the collar, it efficiently reduces slipping on the shaft, has anti-stick-slip characteristics and helps to keep the torque rating of the screw within its designed parameters. The oxide layer also provides corrosion protection.

Shaft Collars, Clamp Collars with Thread

Material: Steel C45 burnished, screws steel 12.9.
Stainless steel 1.4305,
screws stainless steel A2-70.

The threads of the screws DIN 912 are covered with a layer of nylon.

Max. speed: 4,000 min^{-1}.

Temperature range: -40°C to +175°C.

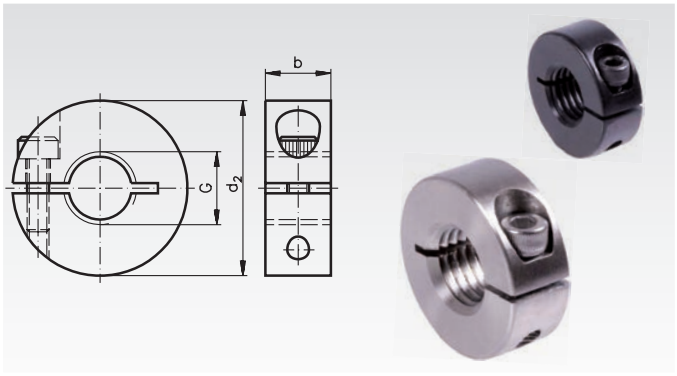

Ordering Details: e.g.: Product No. 623 604 00, Clamp Collar, M4 Thread

Product No. Steel	Product No. Stainless Steel	Thread G	pitch	d_2 mm	b mm	Screw DIN 912	Weight g
623 604 00	**623 996 04**	M4	0,7	16	9	M3 x 8	10
623 605 00	**623 996 05**	M5	0,8	16	9	M3 x 8	11
623 606 00	**623 996 06**	M6	1,0	16	9	M3 x 8	11
623 608 00	**623 996 08**	M8	1,25	18	9	M3 x 8	12
623 610 00	**623 996 10**	M10	1,5	24	9	M3 x 8	22
623 612 00	**623 996 12**	M12	1,75	28	11	M4 x 12	39
623 616 00	**623 996 16**	M16	2,0	34	13	M5 x 14	63
623 620 00	**623 996 20**	M20	2,5	40	15	M6 x 16	97
623 624 00	**623 996 24**	M24	3,0	45	15	M6 x 16	117
623 630 00	**623 996 30**	M30	3,5	54	15	M6 x 18	163

* Metric ISO-standard thread (column 1).



Quick Release Shaft Collars



Shaft Collars, Clamp Collars Double-Split, from Polyamide

on the internet at www.maedler.de

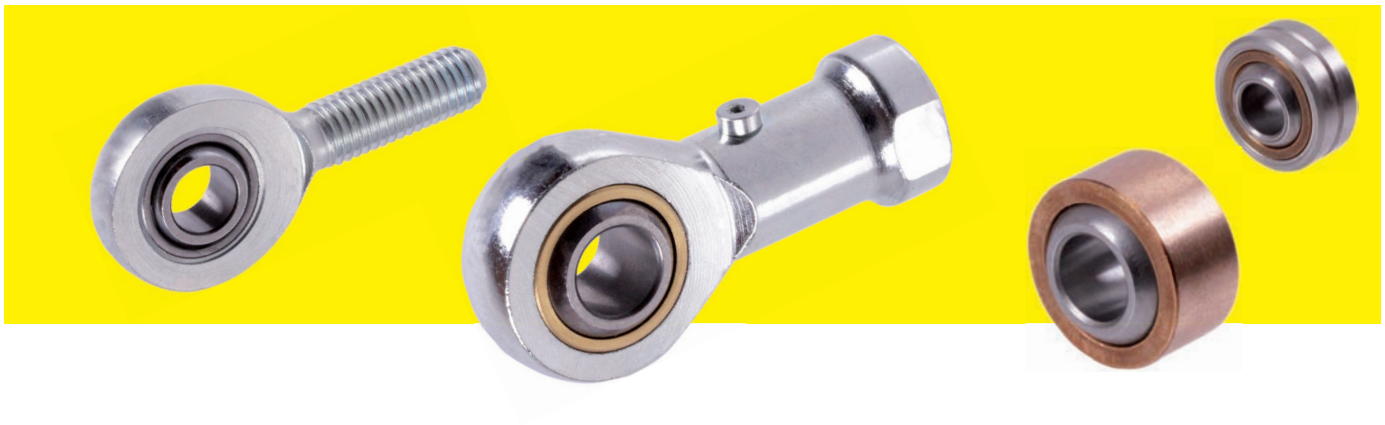

Rod ends, series K (wide version), internal and external thread



		Page
igus	Maintenance free, plastic Ø 5-20mm	461
	Lubricateable (GS), steel Ø 2-40mm	462
	Maintenance free (GT), steel Ø 4-40mm	463
STAINLESS	Maintenance free (GT-R), stainless steel Ø 5-40mm	464
	With ball bearing (BR), steel Ø 6-30mm	466
STAINLESS	With ball bearing (BR-R), stainless steel Ø 6-20mm	467

Rod ends, series E (slim version), internal and external thread



		Page
	Maintenance free (GEW, GAW), steel Ø 6-80mm	465

Rod Ends, special sizes (medium wide version), internal thread



		Page
	With ball bearing, steel, internal thread (PF), Ø 10-20mm	468

Spherical bearings, series K (wide version)



		Page
STAINLESS	Lubricateable, steel and stainless steel Ø 5-40mm	469
	Lubricateable, with outer ring, steel Ø 5-40mm	469
STAINLESS	Lubricateable, with outer ring, stainless steel Ø 5-40mm	469
	Maintenance free, steel and stainless steel Ø 5-40mm	470
	Maintenance free, with outer ring, steel Ø 5-40mm	470
STAINLESS	Maintenance free, with outer ring, stainless steel Ø 5-40mm	470

Spherical bearings, series E (slim version)



		Page
	Lubricateable, steel Ø 6-80mm	471
	Maintenance free, steel Ø 6-80mm	471
STAINLESS	Maintenance free, stainless steel Ø 6-80mm	471

Load Capacity of Rod Ends and Spherical Bearings made from steel

Radial load: The load rating depends on the load case:

Load case I (stationary or static load):
Load rating like table 1.

Load case II (fluctuating or simple dynamic load):
Load rating like table 2. Attention for types GT and GT-R:
Load ratings from table 1 may not be exceeded.

Load case III (alternating or shock load):
The load rating depends highly on the real kind of application and use. We recommend 50% of the load rating from table 2.

Axial load: The axial force may not exceed 20 % of the radial load.

Table 1: Static Load Rating C_o in kN for Load Case I

Bore Diameter of Rod End	Rod Ends with Internal Thread				Rod Ends with External Thread				Spherical bearings Series K				Series E	
mm	GS	GT	GT-R	GEW	GS	GT	GT-R	GAW	S	S...D	G	G...D	GE...DO	GE...UK
2	3	-	-	-	0,6	-	-	-	-	-	-	-	-	-
3	4,1	-	-	-	1,5	-	-	-	-	-	-	-	-	-
4	-	5,2	-	-	-	2,6	-	-	-	-	-	-	-	-
5	9,9	8	11,8	-	4,3	4,3	6,2	-	10	12,5	19,8	12,5	-	-
6	11,9	8,9	13,1	10,3	6	6	8,8	6,9	12,8	15,5	25,8	15,5	17	9
8	17,1	14,1	20,7	15,8	11	11	16,1	12,7	21,6	27,8	42,6	27,8	27,5	14,6
10	21,4	19,3	28,3	23,4	17,4	17,4	25,5	19,9	30	39	60	39	40,5	21,6
12	27	23,5	34,5	31	25,5	23,5	34,5	29	40	53,5	80	53,5	54	28,5
14	24,5	21	39,5	-	24,5	20,8	39,5	-	51,5	70	102,5	70	-	-
15	-	-	-	42,5	-	-	-	39,5	-	-	-	-	85	44
16	37	32	60,5	54,5	36,5	32	60,5	54	64,5	88	128,5	88	106	56
17	-	-	-	54,5	-	-	-	54	-	-	-	-	106	56
18	43	38,6	73	-	43	38,6	73	-	78,5	106,5	157	106,5	-	-
20	49,5	44	83	62,5	49,5	43,8	83	62,5	94,5	130	188,5	130	146	78
22	57	53	100	-	57	52,6	100	-	114	162	229	162	-	-
25	68	62	118	92	68	61,4	118	92	142	204	293	204	240	127
30	82	82	155	124	82	81,6	155	124	416	281	416	281	310	166
35	101	101	191	144	101	101	191	144	480	343	480	343	400	338
40	124	124	235	178	124	124	235	178	693	495	693	495	500	419
45	-	-	-	263	-	-	-	263	-	-	-	-	640	540
50	-	-	-	320	-	-	-	320	-	-	-	-	780	665
60	-	-	-	497	-	-	-	497	-	-	-	-	1220	1030
70	-	-	-	606	-	-	-	566	-		-	-	1560	1320
80	-	-	-	752	-	-	-	752	-	-	-	-	2000	1700

Table 2: Dynamic Load Rating C in kN for Load Case II

Bore Diameter of Rod End	Rod Ends with Internal Thread				Rod Ends with External Thread				Spherical bearings					
mm	GS	GT	GT-R	GEW	GS	GT	GT-R	GAW	S	S...D	G	G...D	GE...DO	GE...UK
2	1,1	-	-	-	1,1	-	-	-	-	-	-	-	-	-
3	1,8	-	-	-	1,8	-	-	-	-	-	-	-	-	-
4	-	0,8	-	-	-	0,8	-	-	-	-	-	-	-	-
5	2,5	7,5	7,5	-	2,5	7,5*	7,5*	-	2,5	7,5	3,3	7,5	-	-
6	3,2	9,3*	9,3	3,6	3,2	9,3*	9,3*	3,6	3,2	9,3	4,3	9,3	3,4	3,6
8	5,4	16,7*	16,7	5,8	5,4	16,7*	16,7*	5,8	5,4	16,7	7,1	16,7	5,5	5,8
10	7,5	23,4*	23,4	8,6	7,5	23,4*	23,4	8,6	7,5	23,4	10	23,4	8,1	8,6
12	10	32*	32	11,5	10	32*	32	11,5	10	32	13,5	32	10,8	11,5
14	13	42*	42*	-	13	42*	42*	-	13	42	17	42	-	-
15	-	-	-	17,5	-	-	-	17,5	-	-	-	-	17	17,5
16	16	52,5*	52,5	22,5	16	52,5*	52,5	22,5	16	62,5	21,5	62,5	21,2	22
17	-	-	-	22,5	-	-	-	22,5	-	-	-	-	21,2	22
18	19,5	64*	64	-	19,5	64*	64*	-	19,5	64	26	64	-	-
20	23,5	78*	78	31,5	23,5	78*	78	31,5	23,5	78	31,5	78	30	31
22	29	97*	97	-	29	97*	97	-	29	97	38	97	-	-
25	35	122*	122*	51	35	122*	122*	51	35	122	47	122	48	51
30	64	168*	168*	66	64	168*	168*	66	64	168	64	168	62	65
35	80	206*	206*	140	80	206*	206*	140	80	206	80	206	80	140
40	116	286*	286*	185	116	286*	286*	185	116	286	116	286	100	185
45	-	-	-	240	-	-	-	240	-	-	-	-	127	240
50	-	-	-	295	-	-	-	295	-	-	-	-	156	295
60	-	-	-	460	-	-	-	460	-	-	-	-	245	460
70	-	-	-	590	-	-	-	590	-	-	-	-	315	590
80	-	-	-	750	-	-	-	750	-	-	-	-	400	750

* Attention: The static load rating is lower. The dynamic load ratings are calculatet for the bearing, to be used for further calculations.
The static load ratings from table 1 may not be exceeded.

Permissible Speed of the Inner Ring for Rod Ends and Spherical Bearings made from steel

The effective determination of the maximum rotational speed depends on various factors and variables which cannot all be predefined by the manufacturer.
a) Load.
b) Loading case (I,II and III).
c) Type of lubrication (central lubrication system etc.).
d) Ambient temperature.
e) Environmental influences (dust etc.).

For the aforementioned reasons the manufacturer cannot determine any explicit, general values for the maximum speed of the inner ring. The values in the table were calculated assuming favourable conditions. Rod ends DIN series E (GEW and GAW) and spherical bearings DIN series E (GE...DO and GE...UK) are not suitable for higher speeds (only for alternating load).

Rod End-Bores	Rod Ends			Spherical Bearings			
	GS min^{-1}	GT** min^{-1}	GT-R** min^{-1}	S min^{-1}	S...D** min^{-1}	G min^{-1}	G...D** min^{-1}
5	1200	600	600	900	600	-	600
6	1500	530	530	760	530	1500	530
8	1200	420	420	620	420	1200	420
10	1000	350	350	500	350	1000	350
12	860	300	300	450	300	860	300
14	750	260	260	360	260	750	260
16	660	230	230	350	230	660	230
18	600	210	210	320	210	600	210
20	540	190	190	280	190	540	190
22	500	170	170	250	170	500	170
25	440	150	150	230	150	440	150
30	370	130	130	370	130	370	130
35	330	110	110	330	110	330	110
40	290	100	100	290	150	290	100

* Sizes 2, 3 and 4 mm and GS external thread 5 mm are not suitable for higher speeds.
** Speeds stated are for short-term rotary operation (not suitable for permanent rotary operation).

Tolerances for Rod Ends and Spherical Bearings

Ball Bores

Series K:
Bore tolerance H7.
Matching shaft: g6 recommended.

Series E:
Bore tolerance 0/-8µ.
Matching shaft: g7 recommended.

Outer diameter of the spherical bearing

Series K: Tolerance h6.
Housing tolerance J7 recommended.

Series E: Tolerance h5.
Housing tolerance JS7 recommended.

Thread Metric thread according to DIN 13. All external thread are rolled for high strength.

Lubrication

All rod ends and spherical bearings, wich are not declared as maintenance-free, must be lubricated. An initial lubrication before use is required. But maintenance-free parts must not be lubricated.

We recommend the following lubrication intervals:
- If the system runs at full speed during the phase of start-up wear, i.e., during the first 5 operating days, running 8 hours per day, and in a dirty operating environment, i.e., under unfavourable ambient conditions, the unit should be lubricated twice a day.
- With oscillating motion once to twice a week.
- With higher temperatures possibly once or twice a day.

We recommend high quality grease with Molykote or graphite ingrediant.

Tilting Angle

Max. tilting angle: the tilting angles stated in the table relate to the maximum permissible misalignment of the shaft axis towards the bearing

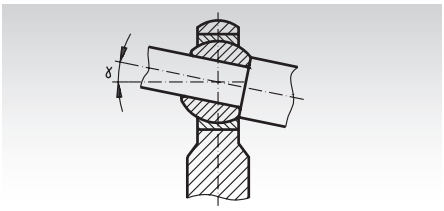

Thermoplastic Rod Ends igubal® KCRM and KCLM similar to DIN 12240-4 (DIN 648) series K, Internal Thread

Material spherical ball: iglidur® W300, yellowish.
Material housing: igumid G, black.

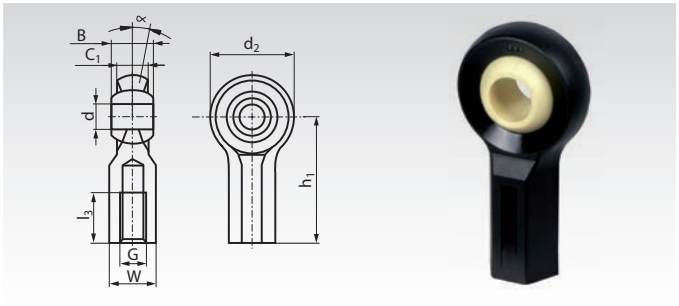

- Maintenance-free, silent running and anti-vibrating.
- High strength at very low weight.
- Resistant against corrosion and many chemicals.
- Electrical and thermal isolating.
- The counter part must rotate inside the bore of the spherical ball. With a metal bolt, a sliding speed up to 30 m/min. may be possible. The spherical ball may only compensate shaft misalignement.

Temperature range: -30° to +80°C.

IR = Internal Right-hand thread. **IL =** Internal Left-hand thread.

Ordering Details: e.g.: Product No. 632 556 05, Rod End igubal KCRM, 5mm

Product No. KCRM IR	Product No. KCLM IL	d^{E10} mm	B mm	C_1 mm	d_2 mm	h_1 mm	l_3 mm	Thread G mm	W mm	Tilting angle α °	Load Rating* radial static N	Load Rating* axial static N	Weight g
632 556 05	**632 557 05**	5	8	6	18	27	12	M5	SW9	43	600	90	4,0
632 556 06	**632 557 06**	6	9	7	20	30	13,5	M6	SW10	40	700	150	4,2
632 556 08	**632 557 08**	8	12	9	24	36	17	M8	SW13	35	1050	250	7,6
632 556 10	**632 557 10**	10	14	10,5	30	43	22	M10	SW15	35	1500	400	12,8
632 556 10F	**632 557 10F**	10	14	10,5	30	43	21	M10x1,25	SW15	35	1500	400	12,8
632 556 12	**632 557 12**	12	16	12	34	50	25	M12	SW17	35	1780	375	19
632 556 12F	**632 557 12F**	12	16	12	34	50	25	M12x1,25	SW17	35	1780	375	19
632 556 16	**632 557 16**	16	21	15	42	64	30	M16	SW20	35	1900	400	34
632 556 16F	**632 557 16F**	16	21	15	42	64	30	M16x1,5	SW20	35	1900	400	34
632 556 20	**632 557 20**	20	25	18	50	77	35	M20	SW24	35	2275	200	55
632 556 20F	**632 557 20F**	20	25	18	50	77	35	M20x1,5	SW24	35	2275	200	55

* At short term, the radial load may be twice as high.

Other versions or sizes on request.

Heavy-Duty Rod Ends GS DIN 12240-4 (DIN 648) Series K, Internal Thread

Material internal ring: Roller bearing steel 100Cr6, hardened HRC 62 ±1, ground and polished.
Material outer part: Bores 6-12 mm, free cutting steel, turned, bores 14-30 mm C22 forged, zinc-plated.
Material bearing race: Special brass CuZn40Al1.
Normal bearing clearance: 15 - 45 µ at a measuring load of 100 N. Sliding speeds up to 60 m/min. Steel on high-duty bronze, thus high radial and axial alternating loads.
Load tables pages 459 - 460.

Initial lubrication before use is required!

IR = Internal-Right hand thread. **IL =** Internal Left-hand thread.

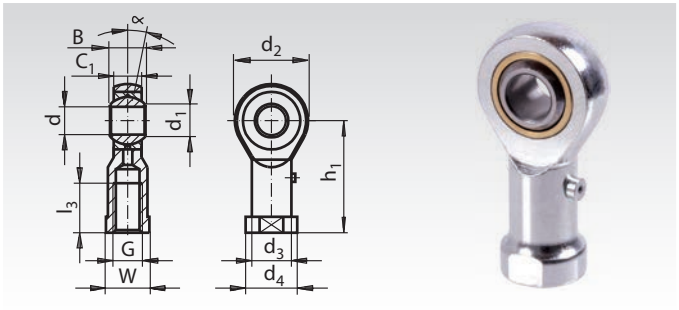

Ordering Details: e.g.: Product No. 632 002 00, Rod End GS, IR

Product No. IR	Product No. IL	d^{H7} mm	$B^{-0.1}$ mm	$C_1^{\pm 0.2}$ mm	d_1 mm	d_2 mm	d_3 mm	d_4 mm	h_1 mm	$l_3^{-1.0}$ mm	Thread ISO DIN 13 6H G mm	W mm	Tilting angle α °	Weight g
632 002 00*	**632 102 00***	2	4,5	3,6	2,6	9	3,8	4,5	16	7	M2	4	16	3
632 003 00*	**632 103 00***	3	6	4,5	5,1	14	5	6,5	21	10	M3	5,5	14	6
632 005 00	**632 105 00**	5	8	6	7,7	18	9	11	27	10	M5	9	13	86
632 006 00	**632 106 00**	6	9	6,75	8,9	20	10	13	30	12	M6	11	13	27
632 008 00	**632 108 00**	8	12	9	10,4	24	12,5	16	36	16	M8	13	14	46
632 010 00	**632 110 00**	10	14	10,5	12,9	28	15	19	43	20	M10	17	13	76
632 012 00	**632 112 00**	12	16	12	15,4	32	17,5	22	50	22	M12	19	13	115
632 014 00	**632 114 00**	14	19	13,5	16,8	36	20	25	57	25	M14	22	16	170
632 016 00	**632 116 00**	16	21	15	19,3	42	22	27	64	28	M16	22	15	230
632 018 00	**632 118 00**	18	23	16,5	21,8	46	25	31	71	32	M18x1,5	27	15	320
632 020 00	**632 120 00**	20	25	18	24,3	50	27,5	34	77	33	M20x1,5	32	14	415
632 022 00	**632 122 00**	22	28	20	25,8	54	30	37	84	37	M22x1,5	32	15	540
632 025 00	**632 125 00**	25	31	22	29,6	60	33,5	42	94	42	M24x2	36	15	750
632 030 00	**632 130 00**	30	37	25	34,8	70	40	51	110	51	M30x2	41	17	1130
632 035 00	**632 135 00**	35	43	28	37,7	80	46	58	125	56	M36x2	50	19	1600
632 040 00	**632 140 00**	40	49	35	44,2	90	57	69	142	60	M42x2	60	16	2770

* Up to size 3 without grease nipple.

Heavy-Duty Rod Ends GS DIN 12240-4 (DIN 648) Series K, External Thread

Material internal ring: Roller bearing steel 100Cr6, hardened HRC 62 ±1, ground and polished.
Material outer part: Bores 6-12 mm, free cutting steel, turned, bores 14-30 mm C22 forged, zinc-plated.
Material bearing race: Special brass CuZn40Al1.
Normal bearing clearance: 15 - 45 µ at a measuring load of 100 N. Sliding speeds up to 60 m/min. Steel on high-duty bronze, thus high radial and axial alternating loads.
Load tables pages 459 - 460.

Initial lubrication before use is required!

AR = External Right-hand thread. **AL =** External Left-hand thread.

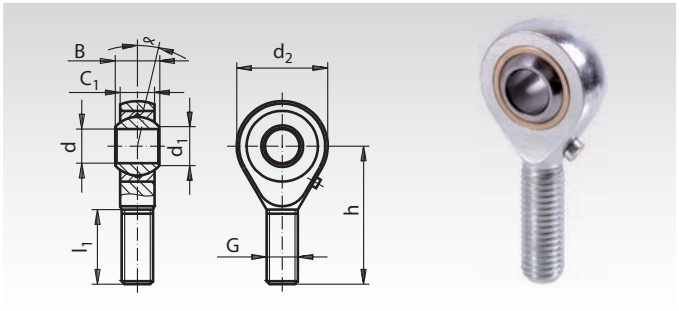

Ordering Details: e.g.: Product No. 632 202 00, Rod End GS, AR

Product No. AR	Product No. AL	d^{H7} mm	$B^{-0.1}$ mm	$C_1^{\pm 0.2}$ mm	d_1 mm	d_2 mm	h mm	$l_1^{-1.0}$ mm	Thread ISO DIN 13 6H G mm	Tilting angle α °	Weight g
632 202 00*	**632 302 00***	2	4,5	3,6	2,6	9	20	12	M2	16	3
632 203 00*	**632 303 00***	3	6	4,5	5,1	14	26	15	M3	14	6
632 205 00*	**632 305 00***	5	8	6	7,7	18	33	20	M5	13	13
632 206 00	**632 306 00**	6	9	6,75	8,9	20	36	22	M6	13	20
632 208 00	**632 308 00**	8	12	9	10,4	24	42	25	M8	14	33
632 210 00	**632 310 00**	10	14	10,5	12,9	28	48	29	M10	13	56
632 212 00	**632 312 00**	12	16	12	15,4	32	54	33	M12	13	87
632 214 00	**632 314 00**	14	19	13,5	16,8	36	60	36	M14	16	129
632 216 00	**632 316 00**	16	21	15	19,3	42	66	40	M16	15	189
632 218 00	**632 318 00**	18	23	16,5	21,8	46	72	44	M18x1,5	15	267
632 220 00	**632 320 00**	20	25	18	24,3	50	78	47	M20x1,5	14	348
632 222 00	**632 322 00**	22	28	20	25,8	54	84	51	M22x1,5	15	443
632 225 00	**632 325 00**	25	31	22	29,6	60	94	57	M24x2	15	600
632 230 00	**632 330 00**	30	37	25	34,8	70	110	71	M30x2	17	1030
632 235 00	**632 335 00**	35	43	28	37,7	80	125	73	M36x2	19	1600
632 240 00	**632 340 00**	40	49	35	44,2	90	142	78	M42x2	16	2550

* Up to size 5 without grease nipple.

Heavy-Duty Rod Ends GT DIN 12240-4 (DIN 648) Series K, Maintenance Free, Internal Thread

Material internal ring: Roller bearing steel 100Cr6, hardened HRC 62 ±1, ground and polished.
Material outer part: Bores 6-12 mm, free cutting steel, turned, bores 14-30 mm C22 forged, zinc-plated.
Material bearing race: Free cutting steel with PTFE-lining.
For high, radial and axial alternating loads.
Sliding speeds up to 10 m/min.
Load tables pages 459 - 460.

IR = Internal Right-hand thread. **IL =** Internal Left-hand thread.

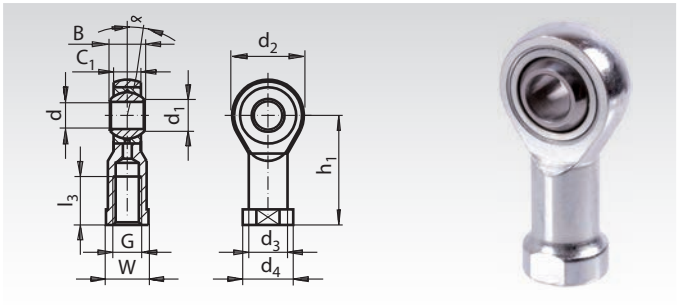

Ordering Details: e.g.: Product No. 632 604 00, Rod End GT, IR

Product No. IR	Product No. IL	d^{H7} mm	$B^{-0.1}$ mm	$C_1^{\pm 0.2}$ mm	d_1 mm	d_2 mm	d_3 mm	d_4 mm	h_1 mm	$l_3^{-1.0}$ mm	Thread ISO DIN 13 6H G mm	W mm	Tilting angle α °	Weight g
632 604 00	**632 704 00**	4	7	5,25	6,5	14	7,8	9,5	24	12	M4	8	14	11
632 605 00	**632 705 00**	5	8	6	7,7	18	9	11	27	10	M5	9	13	18
632 606 00	**632 706 00**	6	9	6,75	8,9	20	10	13	30	12	M6	11	13	27
632 608 00	**632 708 00**	8	12	9	10,4	24	12,5	16	36	16	M8	13	14	46
632 610 00	**632 710 00**	10	14	10,5	12,9	28	15	19	43	20	M10	17	13	76
632 612 00	**632 712 00**	12	16	12	15,4	32	17,5	22	50	22	M12	19	13	115
632 614 00	**632 714 00**	14	19	13,5	16,8	36	20	25	57	25	M14	22	16	170
632 616 00	**632 716 00**	16	21	15	19,3	42	22	27	64	28	M16	22	15	230
632 618 00	**632 718 00**	18	23	16,5	21,8	46	25	31	71	32	M18x1,5	27	15	320
632 620 00	**632 720 00**	20	25	18	24,3	50	27,5	34	77	33	M20x1,5	32	14	415
632 622 00	**632 722 00**	22	28	20	25,8	54	30	37	84	37	M22x1,5	32	15	540
632 625 00	**632 725 00**	25	31	22	29,6	60	33,5	42	94	42	M24x2	36	15	750
632 630 00	**632 730 00**	30	37	25	34,8	70	40	51	110	51	M30x2	41	17	1130
632 635 00	**632 735 00**	35	43	28	37,7	80	46	58	125	56	M36x2	50	19	1600
632 640 00	**632 740 00**	40	49	35	44,2	90	57	69	142	60	M42x2	60	16	2770

Heavy-Duty Rod Ends GT DIN 12240-4 (DIN 648) Series K, Maintenance Free, External Thread

Material internal ring: Roller bearing steel 100Cr6, hardened HRC 62 ±1, ground and polished.
Material outer part: Bores 6-12 mm, free cutting steel, turned, bores 14-30 mm C22 forged, zinc-plated.
Material bearing race: Free cutting steel with PTFE-lining.
For high, radial and axial alternating loads.
Sliding speeds up to 10 m/min.
Load tables pages 459 - 460.

AR = External Right-hand thread. **AL =** External Left-hand thread.

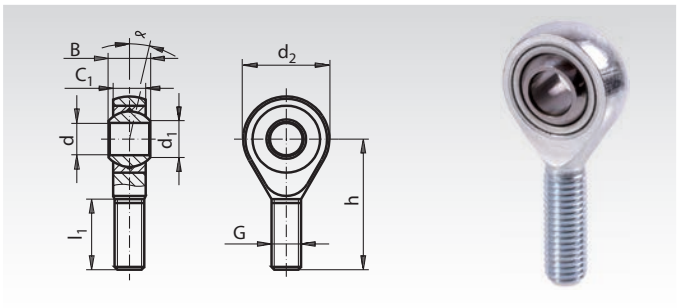

Ordering Details: e.g.: Product No. 632 804 00, Rod End GT, AR

Product No. AR	Product No. AL	d^{H7} mm	$B^{-0.1}$ mm	$C_1^{\pm 0,2}$ mm	d_1 mm	d_2 mm	h mm	$l_1^{-1.0}$ mm	Thread ISO DIN 13 6H G mm	Tilting angle α °	Weight g
632 804 00	**632 904 00**	4	7	5,25	6,5	14	30	19	M4	14	9
632 805 00	**632 905 00**	5	8	6	7,7	18	33	20	M5	13	13
632 806 00	**632 906 00**	6	9	6,75	8,9	20	36	22	M6	13	20
632 808 00	**632 908 00**	8	12	9	10,4	24	42	25	M8	14	33
632 810 00	**632 910 00**	10	14	10,5	12,9	28	48	29	M10	13	56
632 812 00	**632 912 00**	12	16	12	15,4	32	54	33	M12	13	87
632 814 00	**632 914 00**	14	19	13,5	16,8	36	60	38	M14	16	129
632 816 00	**632 916 00**	16	21	15	19,3	42	66	40	M16	15	189
632 818 00	**632 918 00**	18	23	16,5	21,8	46	72	44	M18x1,5	15	267
632 820 00	**632 920 00**	20	25	18	24,3	50	78	47	M20x1,5	14	348
632 822 00	**632 922 00**	22	28	20	25,8	54	84	51	M22x1,5	15	443
632 825 00	**632 925 00**	25	31	22	29,6	60	94	57	M24x2	15	600
632 830 00	**632 930 00**	30	37	25	34,8	70	110	71	M30x2	17	1030
632 835 00	**632 935 00**	35	43	28	37,7	80	125	73	M36x2	19	1600
632 840 00	**632 940 00**	40	49	35	44,2	90	142	78	M42x2	16	2570

Heavy-Duty Rod Ends GT-R DIN 12240-4 (DIN 648) Series K, Maintenance Free, Stainless Steel, Internal Thread

Material:
Rod End: Stainless steel 1.4057.
(forged piece)
Thread rolled, surface clear stained.
Ball: Stainless steel 1.4034, hardened, all sides ground, bearing surface super finish.
Bearing Shell: Stainless steel 1.4571 with PTFE-lining.

Tolerances and load tables page 459 - 460.

IR = Internal Right-hand thread. **IL =** Internal Left-hand thread.

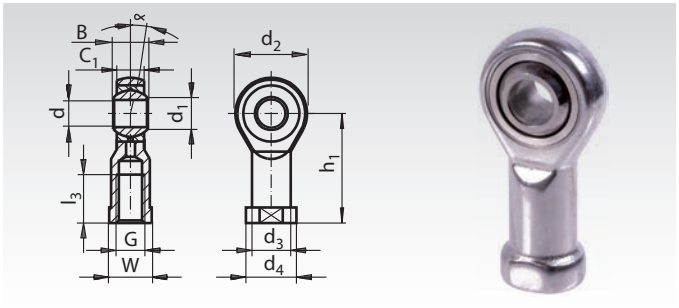

Ordering Details: e.g.: Product No. 632 996 05, Rod End GT-R, IR Stainless

Product No. IR	Product No. IL	d^{H7} mm	$B^{-0.1}$ mm	$C_1^{\pm 0.2}$ mm	d_1 mm	d_2 mm	d_3 mm	d_4 mm	h_1 mm	$l_3^{-1.0}$ mm	Thread ISO DIN 13 6H G mm	W mm	Tilting angle α °	Weight g
632 996 05	**632 997 05**	5	8	6	7,7	18	9	11	27	10	M5	9	13	18
632 996 06	**632 997 06**	6	9	6,75	8,9	20	10	13	30	12	M6	11	13	27
632 996 08	**632 997 08**	8	12	9	10,4	24	12,5	16	36	16	M8	13	14	46
632 996 10	**632 997 10**	10	14	10,5	12,9	28	15	19	43	20	M10	17	13	76
632 996 12	**632 997 12**	12	16	12	15,4	32	17,5	22	50	22	M12	19	13	115
632 996 14	**632 997 14**	14	19	13,5	16,8	36	20	25	57	25	M14	22	16	170
632 996 16	**632 997 16**	16	21	15	19,3	42	22	27	64	28	M16	22	15	230
632 996 18	**632 997 18**	18	23	16,5	21,8	46	25	31	71	32	M18x1,5	27	15	320
632 996 20	**632 997 20**	20	25	18	24,3	50	27,5	34	77	33	M20x1,5	32	14	415
632 996 22	**632 997 22**	22	28	20	25,8	54	30	37	84	37	M22x1,5	32	15	540
632 996 25	**632 997 25**	25	31	22	29,6	60	33,5	42	94	42	M24x2	36	15	750
632 996 30	**632 997 30**	30	37	25	34,8	70	40	50	110	51	M30x2	41	17	1130
632 996 35	**632 997 35**	35	43	28	37,7	80	46	58	125	56	M36x2	50	19	1600
632 996 40	**632 997 40**	40	49	35	44,2	90	57	69	142	60	M42x2	60	16	2770

Heavy-Duty Rod Ends GT-R DIN 12240-4 (DIN 648) Series K, Maintenance Free, Stainless Steel, External Thread

Material:
Rod End: Stainless steel 1.4057.
(forged piece)
Thread rolled, surface clear stained.
Ball: Stainless steel 1.4034, hardened, all sides ground, bearing surface super finish.
Bearing Shell: Stainless steel 1.4571 with PTFE-lining.

Tolerances and load tables page 459 - 460.

AR = External Right-hand thread. **AL =** External Left-hand thread.

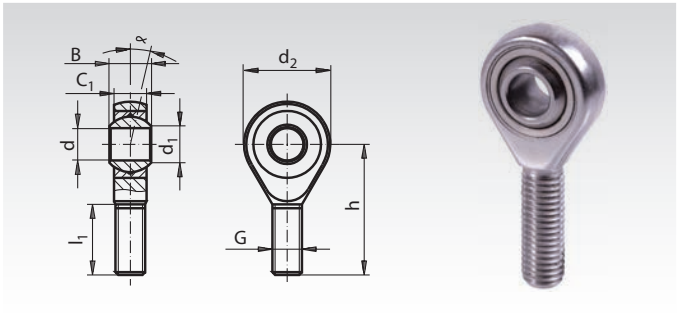

Ordering Details: e.g.: Product No. 632 998 05, Rod End GT-R, AR Stainless

Product No. AR	Product No. AL	d^{H7} mm	$B^{-0.1}$ mm	$C_1^{\pm 0,2}$ mm	d_1 mm	d_2 mm	h mm	$l_1^{-1.0}$ mm	Thread ISO DIN 13 6H G mm	Tilting angle α °	Weight g
632 998 05	**632 999 05**	5	8	6	7,7	18	33	20	M5	13	13
632 998 06	**632 999 06**	6	9	6,75	8,9	20	36	22	M6	13	20
632 998 08	**632 999 08**	8	12	9	10,4	24	42	25	M8	14	33
632 998 10	**632 999 10**	10	14	10,5	12,9	28	48	29	M10	13	56
632 998 12	**632 999 12**	12	16	12	15,4	32	54	33	M12	13	87
632 998 14	**632 999 14**	14	19	13,5	16,8	36	60	38	M14	16	129
632 998 16	**632 999 16**	16	21	15	19,3	42	66	40	M16	15	189
632 998 18	**632 999 18**	18	23	16,5	21,8	46	72	44	M18x1,5	15	267
632 998 20	**632 999 20**	20	25	18	24,3	50	78	47	M20x1,5	14	348
632 998 22	**632 999 22**	22	28	20	25,8	54	84	51	M22x1,5	15	443
632 998 25	**632 999 25**	25	31	22	29,6	60	94	57	M24x2	15	600
632 998 30	**632 999 30**	30	37	25	34,8	70	110	71	M30x2	17	1030
632 998 35	**632 999 35**	35	43	28	37,7	80	125	73	M36x2	19	1600
632 998 40	**632 999 40**	40	49	35	44,2	90	142	78	M42x2	16	2570

Threaded bars with metric thread and fine thread page 510.
Loctite thread locking and bonding products page 811.

Rod Ends GEW DIN 12240-4 (DIN 648) Series E, Maintenance Free, Internal Thread

Material:
Housing: up to size 10 free cutting steel 9SMnPb28K, turned, from size 12 heat-treated steel C45, forged.
Bearing: maintenance-free steel/PTFE bearing.
Tribological pairing: hard chrome - steel/PTFE

Tolerances and load tables page 459 - 460.

Application: For pivoting motions (alternating load).
Not for higher speeds.

IR = **I**nternal **R**ight-hand thread. **IL** = **I**nternal **L**eft-hand thread.

Ordering Details: e.g.: Product No. 634 106 00, Rod End GEW, IR

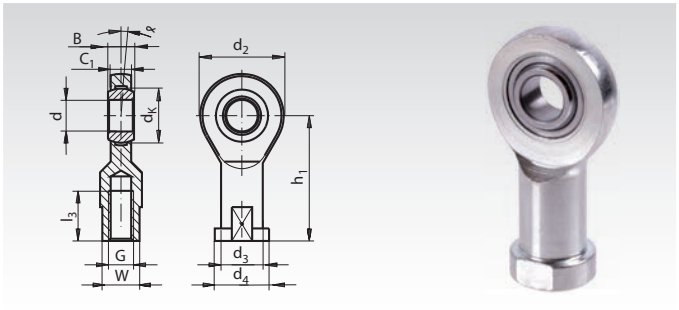

Product No. IR	Product No. IL	d mm	B mm	C_1 mm	d_2 mm	d_3 mm	d_4 mm	d_K mm	h_1 mm	l_3 mm	Thread ISO DIN 13 6H G mm	W mm	Tilting angle α °	Weight g
634 106 00	**634 306 00**	6	6	4,4	20	10	13	10	30	12	M6	11	13	21
634 108 00	**634 308 00**	8	8	6	24	12,5	16	13	36	16	M8	14	15	38
634 110 00	**634 310 00**	10	9	7	28	15	19	16	43	20	M10	17	12	60
634 112 00	**634 312 00**	12	10	8	34	17,5	22	18	50	22	M12	19	11	96
634 115 00	**634 315 00**	15	12	10	40	21	26	22	61	29	M14	22	8	180
634 116 00	**634 316 00**	16	14	11	46	24	30	25	67	33	M16	27	10	220
634 117 00	**634 317 00**	17	14	11	46	24	30	25	67	33	M16	27	10	220
634 120 00	**634 320 00**	20	16	13	53	27,5	35	29	77	38	M20x1,5	32	9	350
634 125 00	**634 325 00**	25	20	17	64	33,5	42	35,5	94	48	M24x2	36	7	640
634 130 00	**634 330 00**	30	22	19	73	40	50	40,7	110	56	M30x2	41	6	930
634 135 00	**634 335 00**	35	25	21	82	47	58	47	125	60	M36x3	50	6	1300
634 140 00	**634 340 00**	40	28	23	92	52	65	53	142	65	M39x3	55	7	2000
634 145 00	**634 345 00**	45	32	27	102	58	70	60	145	65	M42x3	60	7	2500
634 150 00	**634 350 00**	50	35	30	112	62	75	66	160	68	M45x3	65	6	3500
634 160 00	**634 360 00**	60	44	38	135	70	88	80	175	70	M52x3	75	6	5550
634 170 00	**634 370 00**	70	49	42	160	80	98	92	200	80	M56x4	85	6	8600
634 180 00	**634 380 00**	80	55	47	180	95	110	105	235	85	M64x4	100	6	12000

Rod Ends GAW DIN 12240-4 (DIN 648) Series E, Maintenance Free, External Thread

Material:
Housing: up to size 10 Free cutting steel 9SMnPb28K, turned, from size 12 heat-treated steel C45, forged.
Bearing: maintenance-free steel/PTFE bearing.
Tribological pairing: hard chrome - steel/PTFE.

Tolerances and load tables page 459 - 460.

Application: For pivoting motions (alternating load).
Not for higher speeds.

AR = **E**xtern**a**l **R**ight-hand thread. **AL** = **E**xternal **L**eft-hand thread.

Ordering Details: e.g.: Product No. 634 606 00, Rod End GAW, ER

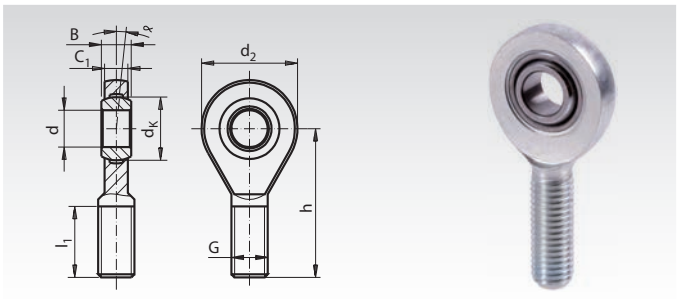

Product No. AR	Product No. AL	d mm	B mm	C_1 mm	d_2 mm	d_K mm	h mm	l_1 mm	Thread ISO DIN 13 6H G mm	Tilting angle α °	Weight g
634 606 00	**634 806 00**	6	6	4,4	20	10	36	18	M6	13	16
634 608 00	**634 808 00**	8	8	6	24	13	42	22	M8	15	28
634 610 00	**634 810 00**	10	9	7	28	16	48	26	M10	12	50
634 612 00	**634 812 00**	12	10	8	34	18	54	28	M12	11	86
634 615 00	**634 815 00**	15	12	10	40	22	63	34	M14	8	140
634 616 00	**634 816 00**	16	14	11	46	25	69	36	M16	10	190
634 617 00	**634 817 00**	17	14	11	46	25	69	36	M16	10	190
634 620 00	**634 820 00**	20	16	13	53	29	78	43	M20x1,5	9	320
634 625 00	**634 825 00**	25	20	17	64	35,5	94	53	M24x2	7	560
634 630 00	**634 830 00**	30	22	19	73	40,7	110	65	M30x2	6	890
634 635 00	**634 835 00**	35	25	21	82	47	140	82	M36x3	6	1400
634 640 00	**634 840 00**	40	28	23	92	53	150	86	M39x3	7	1800
634 645 00	**634 845 00**	45	32	27	102	60	163	94	M42x3	7	2610
634 650 00	**634 850 00**	50	35	30	112	66	185	107	M45x3	6	3450
634 660 00	**634 860 00**	60	44	38	135	80	210	115	M52x3	6	5900
634 670 00	**634 870 00**	70	49	42	160	92	235	125	M56x4	6	8200
634 680 00	**634 880 00**	80	55	47	180	105	270	140	M64x4	6	12000

Threaded bars with metric thread and fine thread page 510.
Loctite thread locking and bonding products page 811.

Heavy-Duty Rod Ends BR with Spherical Bearing DIN 12240-4 (DIN 648) Series K, Internal Thread

Material rod end: Alloyed, case-hardened steel (forged piece) quenched and tempered, bearing race hardened, ground and lapped. Thread rolled/cut, surface zinc-plated and chromatised.
Material inner ring: Bearing steel hardened, precisely honed.
Lubricant: Aluminium-complex-soap-grease, approval according to NSF H1, -45°C to +120°C. Special grease if required.

Rod end with low friction ball bearing, long-term lubricated, sealed with cover plates, with high load rating.

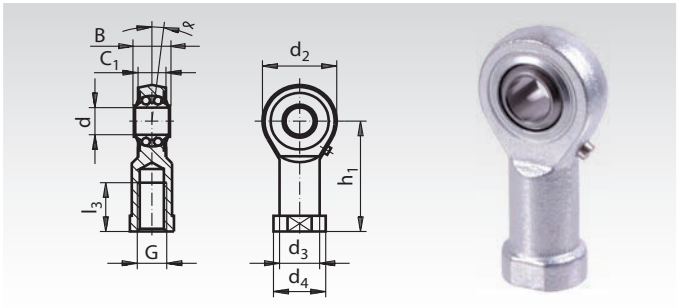

IR = Internal Right-hand thread. **IL =** Internal Left-hand thread.

Ordering Details: e.g.: Product No. 632 406 00, Rod End BR, IR

Product No. IR	Product No. IL	d^{H7} mm	$B^{-0,1}$ mm	C_1 mm	d_2 mm	d_3 mm	d_4 mm	h_1 mm	l_3 mm	G mm	α °	Load Rating [kN] dynam. C	static C_0	Calculation Factors* Y	Y_0	Speed n_{max} min^{-1}	Weight g
632 406 00	**632 456 00**	6	9	6,75	20	10	13	30	12	M6	8	2,8	0,65	2,09	2,19	1350	23
632 408 00	**632 458 00**	8	12	9	24	12,5	16	36	16	M8	8,5	4,0	1,0	1,8	1,89	1300	41
632 410 00	**632 460 00**	10	14	10,5	28	15	19	43	20	M10	8	4,5	1,5	1,9	1,81	1225	66
632 412 00	**632 462 00**	12	16	12	32	17,5	22	50	22	M12	7,5	5,0	1,8	1,74	1,82	1125	100
632 414 00	**632 464 00**	14	19	13,5	36	20	25	57	25	M14	6	5,6	2,0	2,36	2,48	1025	150
632 416 00	**632 466 00**	16	21	15	42	22	27	64	28	M16	8	6,3	2,4	2,24	2,35	975	199
632 418 00	**632 468 00**	18	23	16,5	46	25	31	71	32	M18x1,5	8,5	7,1	2,9	2,21	2,31	900	278
632 420 00	**632 470 00**	20	25	18	50	27,5	34	77	33	M20x1,5	7	7,9	3,5	2,46	2,58	825	352
632 422 00	**632 472 00**	22	28	20	54	30	38	84	37	M22x1,5	8	9,3	4,0	2,35	2,24	725	470
632 425 00	**632 475 00**	25	31	22	64	30	35	94	42	M24x2	5	11,0	5,7	2,02	2,12	600	583
632 430 00	**632 480 00**	30	37	25	70	40	50	110	51	M30x2	7,5	14,2	7,5	2,24	2,35	450	925

* Calculation see page 468.

Heavy-Duty Rod Ends BR with Spherical Bearing DIN 12240-4 (DIN 648) Series K, External Thread

Material rod end: Alloyed, case-hardened steel (forged piece) quenched and tempered, bearing race hardened, ground and lapped. Thread rolled/cut, surface zinc-plated and chromatised.
Material inner ring: Bearing steel hardened, precisely honed.
Lubricant: Aluminium-complex-soap-grease, approval according to NSF H1, -45°C to +120°C. Special grease if required.

Basically without friction, long-term lubrication, sealed with cover plates, offer small dimensions, large pivoting angle and high load rating.

AR = External Right-hand thread. **AL =** External Left-hand thread.

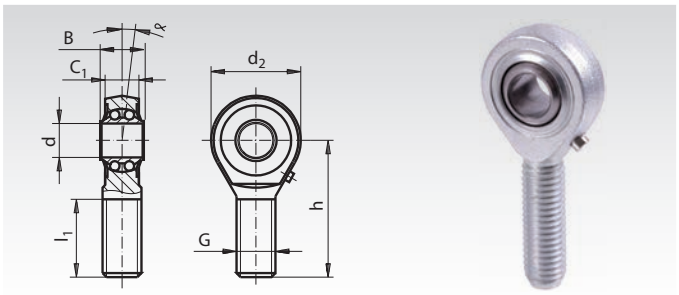

Ordering Details: e.g.: Product No. 632 506 00, Rod End BR, AR

Product No. AR	Product No. AL	d^{H7} mm	$B^{-0,1}$ mm	C_1 mm	d_2 mm	h mm	l_1 mm	G mm	α °	Load Rating [kN] dynam. C	static C_0	Calculation Factors* Y	Y_0	Speed n_{max} min^{-1}	Weight g
632 506 00	**632 556 00**	6	9	6,75	20	36	22	M6	8	2,8	0,65	2,09	2,19	1350	18
632 508 00	**632 558 00**	8	12	9	24	42	25	M8	8,5	4,0	1,0	1,8	1,89	1300	33
632 510 00	**632 560 00**	10	14	10,5	28	48	29	M10	8	4,5	1,5	1,9	1,81	1225	57
632 512 00	**632 562 00**	12	16	12	32	54	33	M12	7,5	5,0	1,8	1,74	1,82	1125	81
632 514 00	**632 564 00**	14	19	13,5	36	60	36	M14	6	5,6	2,0	2,36	2,48	1025	122
632 516 00	**632 566 00**	16	21	15	42	66	40	M16	8	6,3	2,4	2,24	2,35	975	166
632 518 00	**632 568 00**	18	23	16,5	46	72	44	M18x1,5	8,5	7,1	2,9	2,21	2,31	900	241
632 520 00	**632 570 00**	20	25	18	50	78	47	M20x1,5	7	7,9	3,5	2,46	2,58	825	303
632 522 00	**632 572 00**	22	28	20	54	84	51	M22x1,5	8	9,3	4,0	2,35	2,24	725	391
632 525 00	**632 575 00**	25	31	22	64	94	57	M24x2	5	11,0	5,7	2,02	2,12	600	598
632 530 00	**632 580 00**	30	37	25	70	110	66	M30x2	7,5	14,2	7,5	2,24	2,35	450	825

* Calculation see page 468.

Threaded bars with metric thread and fine thread page 510.
Loctite thread locking and bonding products page 811.

Heavy-Duty Rod Ends BR-R with Spherical Bearing DIN 12240-4 Series K, Stainless Steel, Internal Thread

Material rod end: Stainless steel, forged, hardened. Bearing race superfinished.

Material inner ring and rollers: Stainless steel, hardened, superfinished.
Lubricant: Aluminium-complex-soap-grease, approval according to NSF H1, -45°C to +120°C. Special grease if required.

Basically without friction, long-term lubrication, sealed with cover plates, offer small dimensions, large pivoting angle and high load rating.

IR = Internal Right-hand thread. **IL =** Internal Left-hand thread.

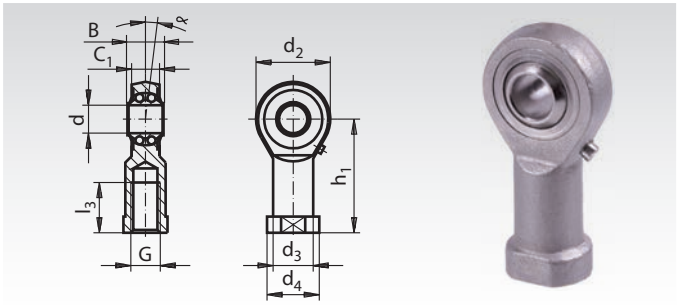

Ordering Details: e.g.: Product No. 632 994 06, Rod End BR-R, IR

Product No. IR	Product No. IL	d^{H7} mm	$B^{-0,1}$ mm	C_1 mm	d_2 mm	d_3 mm	d_4 mm	h_1 mm	l_3 mm	G mm	α °	Load Rating [kN] dynam. C	static C_0	Calculation Factors* Y	Y_0	Speed n_{max} min^{-1}	Weight g
632 994 06	**632 994 56**	6	9	6,75	20	10	13	30	12	M6	8	1,9	0,5	2,09	2,19	1350	24
632 994 08	**632 994 58**	8	12	9	24	12,5	16	36	16	M8	8,5	2,8	0,7	1,8	1,89	1300	44
632 994 10	**632 994 60**	10	14	10,5	28	15	19	43	20	M10	8	3,1	1,0	1,9	1,81	1225	72
632 994 12	**632 994 62**	12	16	12	32	17,5	22	50	22	M12	7,5	3,5	1,3	1,74	1,82	1125	107
632 994 16	**632 994 66**	16	21	15	42	22	27	64	28	M16	8	4,3	1,6	2,24	2,35	975	224
632 994 20	**632 994 70**	20	25	18	50	27,5	34	77	33	M20x1,5	7	5,4	2,3	2,46	2,58	825	367

* Calculation see page 468.

Heavy-Duty Rod Ends BR with Spherical Bearing DIN 12240-4 Series K, Stainless Steel, External Thread

Material rod end: Stainless steel, forged, hardened. Bearing race superfinished, thread rolled.

Material inner ring and rollers: Stainless steel, hardened, superfinished
Lubricant: Aluminium-complex-soap-grease, approval according to NSF H1, -45°C to +120°C. Special grease if required.

Basically without friction, long-term lubrication, sealed with cover plates, offer small dimensions, large pivoting angle and high load rating.

AR = External Right-hand thread. **AL =** External Left-hand thread.

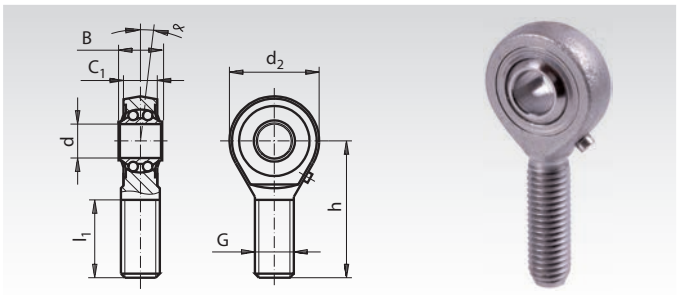

Ordering Details: e.g.: Product No. 632 995 06, Rod End BR-R, AR

Product No. AR	Product No. AL	d^{H7} mm	$B^{-0,1}$ mm	C_1 mm	d_2 mm	h mm	l_1 mm	G mm	α °	Load Rating [kN] dynam. C	static C_0	Calculation Factors* Y	Y_0	Speed n_{max} min^{-1}	Weight g
632 995 08	**632 995 58**	8	12	9	24	42	25	M8	8,5	2,8	0,7	1,8	1,89	1300	36
632 995 10	**632 995 60**	10	14	10,5	28	48	29	M10	8	3,1	1,0	1,9	1,81	1225	60
632 995 12	**632 995 62**	12	16	12	32	54	33	M12	7,5	3,5	1,3	1,74	1,82	1125	87
632 995 16	**632 995 66**	16	21	15	42	66	40	M16	8	4,3	1,6	2,24	2,35	975	190
632 995 20	**632 995 70**	20	25	18	50	78	47	M20x1,5	7	5,4	2,3	2,46	2,58	825	338

* Calculation see page 468.

Threaded bars with metric thread and Fine thread page 510.
Loctite thread locking and bonding products page 811.

Heavy-Duty Rod Ends PF with Integral Spherical Bearing

Material rod end: Alloyed, case-hardened steel (forged) quenched and tempered, bearing race hardened, ground and lapped. Thread rolled/cut, surface zinc-plated and chromatised.
Material inner ring: Bearing steel hardened, precisely turned.
Lubricant: Aluminium-complex-soap-grease, approval according to NSF H1, -45°C to +120°C. Special grease if required.

Short design with internal thread.

Threaded bars with metric ISO thread and ISO fine thread page 510.

IR = **I**nternal **R**ight-hand thread. **IL** = **I**nternal **L**eft-hand thread.

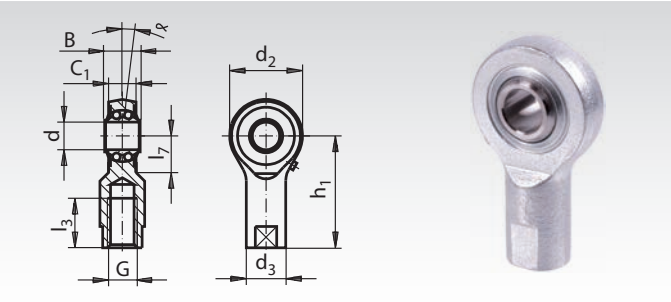

Ordering Details: e.g.: Product No. 634 410 00, Rod End PF

Product No. IR	Product No. IL	d_1 [1] mm	B^{h12} mm	C_1 mm	d_2 mm	d_3 mm	h_1 mm	l_3 mm	l_7 mm	G mm	α °	Bearing loads [kN] dynam. C	static C_0	Calculation-Factors Y	Y_0	Speed $n_{max.}$	Weight g
634 410 00	**634 460 00**	10	13	9	30	15	38	17	14,5	M8	7	2,6	1,0	1,90	1,81	1225	63
634 415 00	**634 465 00**	15	16,5	12	40	19	51	24	20	M12	7	5,0	1,9	2,30	2,41	1025	143
634 420 00	**634 470 00**	20	20,5	15	48	22	65	32	22	M16	6,5	6,1	3,0	2,34	2,45	850	223

[1] Tolerance DIN 620.
* in min^{-1}

Inner Rings - Tolerances DIN 620

Nominal dimension range of the bore d_1 mm		Tolerance in µm	
above	up to	min.	max.
0,6	2,5	-8	+1
2,5	10	-8	+1
10	18	-8	+1
18	30	-9	+1
30	50	-11	+1

Rough Calculation for Rod Ends/Ball Bearing Type

β = half the pivoting angle in °
C = dynamic load rating in N
C_0 = static load rating in N
F_a = axial load in N ($F_a \le 0.2\ F_r$)
F_r = radial load in N
n = speed or pivoting frequency in min^{-1}
P = dynamic equivalent radial load in N
(for self-aligning ball bearing $P = F_r + Y \cdot F_a$)
(for self-aligning roller bearing $P = F_r + 9.5 \cdot F_a$)
P_0 = Static equivalent radial load in N
(for self-aligning ball bearing $P_0 = F_r + Y_0 \cdot F_a$)
(for self-aligning roller bearing $P_0 = F_r + 5 \cdot F_a$)
Y = axial factor, dynamic
Y_0 = axial factor, static

Nominal Service Life L_n (n)

Rotating:

$$Lh_{rot} = 10^6 \frac{\left(\frac{C}{P}\right)^z}{60 \cdot n} [h]$$

Oscillating:

$$Lh_{osz.} = 10^6 \frac{\left(\frac{C}{P \sqrt[3]{\frac{\beta}{90}}}\right)^z}{60 \cdot n} [h]$$

z = 3 for self-aligning ball bearing
z = 3.33 for self-aligning roller bearing

Conditions: Pivoting angle $\beta \ge 3°$
For pivoting angle $\beta < 3°$ we recommend the use of rod ends with slide bearings.

Static load stationary: $P_0 \le C_0$ [N]

Loctite thread locking and bonding products page 811.

Spherical Bearings Series K, Steel or Stainless Steel, re-lubricateable

Material standard: Inner ring bearing steel 100Cr6, hardened, ground and polished. Bearing shell special bronze CuSn8.

Material stainless: Inner ring stainless steel 1.4034, hardened, ground and polished. Bearing shell special bronze CuSn8.

- DIN 12240-1 (DIN 648), series K (wide shape).
- Re-lubricateable (from size 6 with lubrication hole).
- Initial lubrication before use is required.
- Suitable for higher speeds.
- Without additional outer ring.

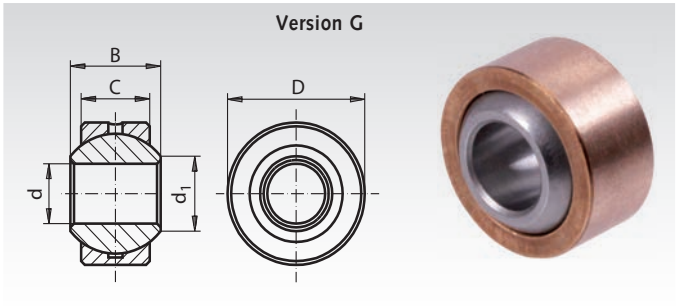

Ordering Details: e.g.: Product No. 633 205 00, Spherical Bearing, Series K, Steel, re-lubricateable, 5mm

Product No. Standard	Product No. Stainless	d^{H7} mm	$B^{-0,1}$ mm	$C^{-0,1}$ mm	$D^{-0,012}$ mm	d_1 mm	α °	Load Rating [kN] dynam. C	Load Rating [kN] static C_0	Speed n_{max} min^{-1}	Weight g
633 205 00*	**633 992 05**	5	8	6	13	7,7	13	3,3	19,8	-	5
633 206 00	**633 992 06**	6	9	6,75	16	8,9	13	4,3	25,8	1500	9
633 208 00	**633 992 08**	8	12	9	19	10,4	14	7,1	42,6	1200	16
633 210 00	**633 992 10**	10	14	10,5	22	12,9	13	10	60	1000	25
633 212 00	**633 992 12**	12	16	12	26	15,4	13	13,5	80	860	40
633 214 00	**633 992 14**	14	19	13,5	28	16,8	16	17	103	750	51
633 216 00	**633 992 16**	16	21	15	32	19,3	15	21,5	129	660	76
633 218 00	**633 992 18**	18	23	16,5	35	21,8	15	26	157	600	97
633 220 00	**633 992 20**	20	25	18	40	24,3	14	31,5	189	540	141
633 222 00	**633 992 22**	22	28	20	42	25,8	15	38	229	500	168
633 225 00	**633 992 25**	25	31	22	47	29,6	15	47	293	440	231
633 230 00	**633 992 30**	30	37	25	55	34,8	17	64	416	370	362
633 235 00	**633 992 35**	35	43	28	62	37,7	19	80	480	330	502
633 240 00	**633 992 40**	40	49	35	72	44,2	16	116	693	290	832

* Without lubrication bore.

Spherical Bearings Series K, Steel or Stainless Steel, re-lubricateable, with Outer Ring

Material standard: Inner ring bearing steel 100Cr6, hardened, ground and polished. Bearing shell special bronze CuSn8. Outer ring steel 9SMnPb28K, zinc plated.

Material stainless: Inner ring stainless steel 1.4034, hardened, ground and polished. Bearing shell special bronze CuSn8. Outer ring stainless steel 1.4305.

- DIN 12240-1 (DIN 648), series K (wide shape).
- Re-lubricateable, initial lubrication before use is required.
- Suitable for higher speeds.
- With additional outer ring.

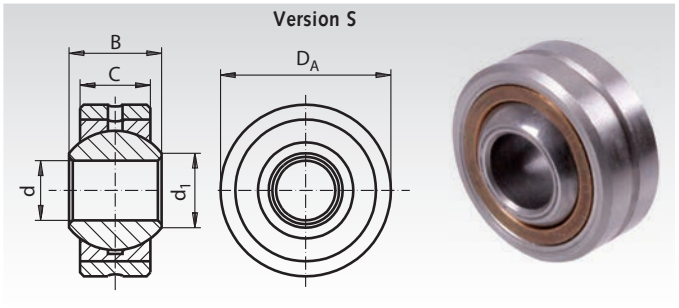

Ordering Details: e.g.: Product No. 633 005 00, Spherical Bearing, Series K, Steel, re-lubricateable, with Outer Ring, 5mm

Product No. Standard	Product No. Stainless	d^{H7} mm	$B^{-0,1}$ mm	$C^{-0,1}$ mm	$D_A^{-0,012}$ mm	d_1 mm	α °	Load Rating [kN] dynam. C	Load Rating [kN] static C_0	Speed n_{max} min^{-1}	Weight g
633 005 00	**633 990 05**	5	8	6	16	7,7	13	3,3	19,8	1200	8
633 006 00	**633 990 06**	6	9	6,75	18	8,9	13	4,3	25,8	1500	12
633 008 00	**633 990 08**	8	12	9	22	10,4	14	7,1	42,6	1200	23
633 010 00	**633 990 10**	10	14	10,5	26	12,9	13	10	60	1000	38
633 012 00	**633 990 12**	12	16	12	30	15,4	13	13,5	80	860	58
633 014 00	**633 990 14**	14	19	13,5	34	16,8	16	17	103	750	83
633 016 00	**633 990 16**	16	21	15	38	19,3	15	21,5	129	660	115
633 018 00	**633 990 18**	18	23	16,5	42	21,8	15	26	157	600	150
633 020 00	**633 990 20**	20	25	18	46	24,3	14	31,5	189	540	200
633 022 00	**633 990 22**	22	28	20	50	25,8	15	38	229	500	270
633 025 00	**633 990 25**	25	31	22	56	29,6	15	47	293	440	375
633 030 00	**633 990 30**	30	37	25	66	34,8	17	64	416	370	540
633 035 00	**633 990 35**	35	43	28	78	37,7	19	80	480	330	850
633 040 00	**633 990 40**	40	49	35	87	44,2	16	116	693	290	1400

Spherical Bearings Series K, Steel or Stainless Steel, maintenance-free

Material standard: Inner ring bearing steel 100Cr6, hardened, ground and polished. Bearing shell steel 9SMnPb28K, zinc plated, with PTFE-lining.

Material stainless: Inner ring stainless steel 1.4034, hardened, ground and polished. Bearing shell stainless steel 1.4571, with PTFE-lining.

- DIN 12240-1 (DIN 648), series K (wide shape).
- Maintenance-free.
- Suitable for high dynamic loads.
- Without additional outer ring.

Version G..D

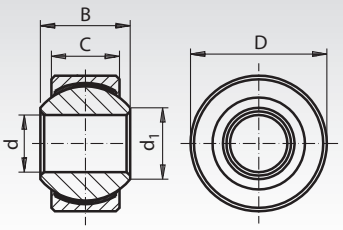



Ordering Details: e.g.: Product No. 633 305 00, Spherical Bearing, Series K, Steel, maintenance-free, 5mm

Product No. Standard	Product No. Stainless	d^{H7} mm	$B^{-0,1}$ mm	$C^{-0,1}$ mm	$D^{-0,012}$ mm	d_1 mm	α °	Load Rating [kN] dynam. C	static C_0	Speed n_{max} min^{-1}	Weight g
633 305 00	**633 993 05**	5	8	6	13	7,7	13	7,5	12,5	600	6
633 306 00	**633 993 06**	6	9	6,75	16	8,9	13	9,3	15,5	530	9
633 308 00	**633 993 08**	8	12	9	19	10,4	14	16,7	27,8	420	17
633 310 00	**633 993 10**	10	14	10,5	22	12,9	13	23,4	39	350	26
633 312 00	**633 993 12**	12	16	12	26	15,4	13	32	53,5	300	41
633 314 00	**633 993 14**	14	19	13,5	28	16,8	16	42	70	260	56
633 316 00	**633 993 16**	16	21	15	32	19,3	15	52,5	88	230	75
633 318 00	**633 993 18**	18	23	16,5	35	21,8	15	64	107	210	97
633 320 00	**633 993 20**	20	25	18	40	24,3	14	78	130	190	142
633 322 00	**633 993 22**	22	28	20	42	25,8	15	97	162	170	169
633 325 00	**633 993 25**	25	31	22	47	29,6	15	122	204	150	230
633 330 00	**633 993 30**	30	37	25	55	34,8	17	168	281	130	369
633 335 00	**633 993 35**	35	43	28	62	37,7	19	206	343	110	505
633 340 00	**633 993 40**	40	49	35	72	44,2	16	286	495	100	832

Spherical Bearings Series K, Steel or Stainless Steel, maintenance-free, with Outer Ring

Material standard: Inner ring bearing steel 100Cr6, hardened, ground and polished. Outer ring and bearing shell steel, zinc plated. With PTFE-lining.

Material stainless: Inner ring stainless steel 1.4034, hardened, ground and polished. Bearing shell stainless steel 1.4571 with PTFE-lining. Outer ring stainless steel 1.4305.

- DIN 12240-1 (DIN 648), series K (wide shape).
- Maintenance-free.
- Suitable for high dynamic loads.
- With additional outer ring.

Version S..D

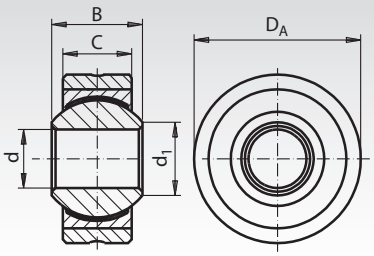



Ordering Details: e.g.: Product No. 633 105 00, Spherical Bearing, Series K, Steel, maintenance-free, with Outer Ring 5mm

Product No. Standard	Product No. Stainless	d^{H7} mm	$B^{-0,1}$ mm	$C^{-0,1}$ mm	$D_A^{-0,012}$ mm	d_1 mm	α °	Load Rating [kN] dynam. C	static C_0	Speed n_{max} min^{-1}	Weight g
633 105 00	**633 991 05**	5	8	6	16	7,7	13	7,5	12,5	600	8
633 106 00	**633 991 06**	6	9	6,75	18	8,9	13	9,3	15,5	530	12
633 108 00	**633 991 08**	8	12	9	22	10,4	14	16,7	27,8	420	23
633 110 00	**633 991 10**	10	14	10,5	26	12,9	13	23,4	39	350	38
633 112 00	**633 991 12**	12	16	12	30	15,4	13	32	53,5	300	58
633 114 00	**633 991 14**	14	19	13,5	34	16,8	16	42	70	260	83
633 116 00	**633 991 16**	16	21	15	38	19,3	15	52,5	88	230	115
633 118 00	**633 991 18**	18	23	16,5	42	21,8	15	64	107	210	150
633 120 00	**633 991 20**	20	25	18	46	24,3	14	78	130	190	200
633 122 00	**633 991 22**	22	28	20	50	25,8	15	97	162	170	270
633 125 00	**633 991 25**	25	31	22	56	29,6	15	122	204	150	375
633 130 00	**633 991 30**	30	37	25	66	34,8	17	168	281	130	540
633 135 00	**633 991 35**	35	43	28	78	37,7	19	206	343	110	850
633 140 00	**633 991 40**	40	49	35	87	44,2	16	286	495	100	1400

Spherical Bearings Series E, Steel, re-lubricateable

Material: Inner ring and bearing shell from bearing steel 100Cr6, hardened, ground and phosphated. Treated with molybdenum disulfide. Bearing shell (outer ring) cut.

- DIN 12240-1 (DIN 648), series E (slim shape).
- Re-lubricateable (from size 15 with lubrication hole).
- Initial lubrication before use is required.
- Suitable for high, alternating loads.
- Sliding speed up to 60 m/min.

Version GE..DO

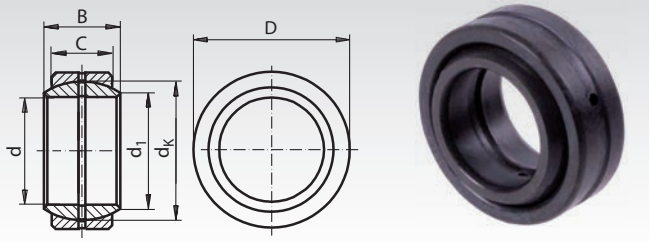

Ordering Details: e.g.: Product No. 633 606 00, Spherical Bearing, Series E, re-lubricateable, 6mm

Product No. Standard	d mm	B* mm	C mm	D mm	d_1 mm	d_k mm	Tilting Angel α °	Weight g
633 606 00**	$6^{-0,008}$	6	4	$14^{-0,008}$	8,0	10	13	4
633 608 00**	$8^{-0,008}$	8	5	$16^{-0,008}$	10,2	13	15	7
633 610 00**	$10^{-0,008}$	9	6	$19^{-0,009}$	13,2	16	12	11
633 612 00**	$12^{-0,008}$	10	7	$22^{-0,009}$	14,9	18	11	17
633 615 00	$15^{-0,008}$	12	9	$26^{-0,009}$	18,4	22	8	26
633 616 00	$16^{-0,008}$	14	10	$30^{-0,009}$	20,7	25	10	40
633 617 00	$17^{-0,008}$	14	10	$30^{-0,009}$	20,7	25	10	40
633 620 00	$20^{-0,010}$	16	12	$35^{-0,011}$	24,1	29	9	64
633 625 00	$25^{-0,010}$	20	16	$42^{-0,011}$	29,3	35,5	7	115
633 630 00	$30^{-0,010}$	22	18	$47^{-0,011}$	34,2	40,7	6	149
633 635 00	$35^{-0,012}$	25	20	$5^{-0,013}$	39,7	47	6	228
633 640 00	$40^{-0,012}$	28	22	$62^{-0,013}$	45,0	53	7	318
633 645 00	$45^{-0,012}$	32	25	$68^{-0,013}$	50,7	60	7	421
633 650 00	$50^{-0,012}$	35	28	$75^{-0,013}$	55,9	66	6	562
633 660 00	$60^{-0,015}$	44	36	$90^{-0,015}$	66,8	80	6	1030
633 670 00	$70^{-0,015}$	49	40	$105^{-0,015}$	77,8	92	6	1570
633 680 00	$80^{-0,015}$	55	45	$120^{-0,015}$	89,4	105	6	2320

* Outer ring tolerance before cutting. ** Up to size 12 without lubrication bore. Technical tables page 459 - 460.

Spherical Bearings Series E, Steel or Stainless Steel, maintenance-free

Material standard: Inner ring bearing steel 100Cr6, hardened, ground, polished and hard chromed. Bearing shell from bearing steel, 100Cr6 with PTFE-lining. From size 35 in 2RS-version (sealed on both sides).

Material stainless: Inner ring stainless steel 1.4125 (from size 45 stainless steel 1.4112), hardened, ground and polished. Bearing shell stainless steel 1.4571, with PTFE-lining.

- DIN 12240-1 (DIN 648), series E (slim shape).
- Maintenance-free.
- Suitable for high unidirectional load.
- Sliding speed up to 10 m/min.

Version GE..UK

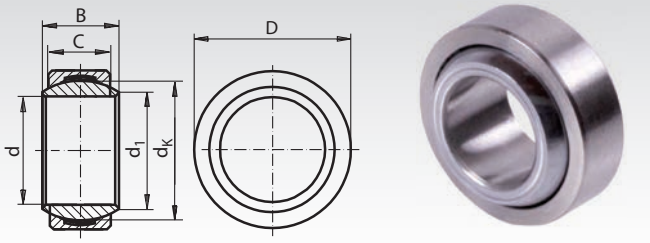

Ordering Details: e.g.: Product No. 633 706 00, Spherical Bearing, Series E, maintenance-free, 6mm

Product No. Standard	Product No. Stainless	d mm	B mm	C mm	D mm	d_1 mm	d_K mm	Tilting Angel α °	Weight g
633 706 00	**633 997 06**	$6^{-0,008}$	6	4	$14^{-0,008}$	8,0	10	13	4
633 708 00	**633 997 08**	$8^{-0,008}$	8	5	$16^{-0,008}$	10,2	13	15	7
633 710 00	**633 997 10**	$10^{-0,008}$	9	6	$19^{-0,009}$	13,2	16	12	11
633 712 00	**633 997 12**	$12^{-0,008}$	10	7	$22^{-0,009}$	14,9	18	11	17
633 715 00	**633 997 15**	$15^{-0,008}$	12	9	$26^{-0,009}$	18,4	22	8	26
633 716 00	**633 997 16**	$16^{-0,008}$	14	10	$30^{-0,009}$	20,7	25	10	40
633 717 00	**633 997 17**	$17^{-0,008}$	14	10	$30^{-0,009}$	20,7	25	10	40
633 720 00	**633 997 20**	$20^{-0,010}$	16	12	$35^{-0,011}$	24,1	29	9	64
633 725 00	**633 997 25**	$25^{-0,010}$	20	16	$42^{-0,011}$	29,3	35,5	7	115
633 730 00	**633 997 30**	$30^{-0,010}$	22	18	$47^{-0,011}$	34,2	40,7	6	149
633 735 00*	**633 997 35**	$35^{-0,012}$	25	20	$55^{-0,013}$	39,8	47	6	228
633 740 00*	**633 997 40**	$40^{-0,012}$	28	22	$62^{-0,013}$	45,0	53	7	318
633 745 00*	**633 997 45**	$45^{-0,012}$	32	25	$68^{-0,013}$	50,8	60	7	421
633 750 00*	**633 997 50**	$50^{-0,015}$	35	28	$75^{-0,013}$	56,0	66	6	532
633 760 00*	**633 997 60**	$60^{-0,015}$	44	36	$90^{-0,015}$	66,8	80	6	1030
633 770 00*	**633 997 70**	$70^{-0,015}$	49	40	$105^{-0,015}$	77,9	92	6	1570
633 780 00*	**633 997 80**	$80^{-0,015}$	55	45	$120^{-0,015}$	89,4	105	6	2320

* From size 35 in 2RS-version (sealed on both sides).

Technical tables page 459 - 460.

Clevis Joints similar DIN 71752, Aluminium, KL

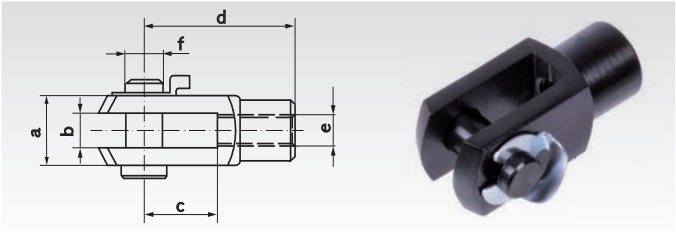

Material: Clevis and bolt aluminium, anodized black.
With KL-Retainer from steel, bright zinc plated.

Ordering Details: e.g.: Product No. 637 660 01, Clevis joint 4 x 8, Aluminium, KL

Product No. KL right	Product No. SL right	Size mm	a mm	b mm	c mm	d mm	e mm	f mm	Weight g
637 660 01	637 664 01	4 x 8	8	4	8	16	M4	4	2,2
637 660 02	637 664 02	4 x 16	8	4	16	24	M4	4	2,9
637 660 03	637 664 03	5 x 10	10	5	10	20	M5	5	4,2
637 660 05	637 664 05	6 x 12	12	6	12	24	M6	6	7,2
637 660 07	637 664 07	8 x 16	16	8	16	32	M8	8	16,8
637 660 09	637 664 09	10 x 20	20	10	20	40	M10	10	33,3
637 660 11	637 664 11	12 x 24	24	12	24	48	M12	12	54,4
637 660 13	637 664 13	14 x 28	27	14	28	56	M14	14	78,1
637 660 15	637 664 15	16 x 32	32	16	32	64	M16	16	121,2

Clevis Joints similar DIN 71752, Aluminium, SL

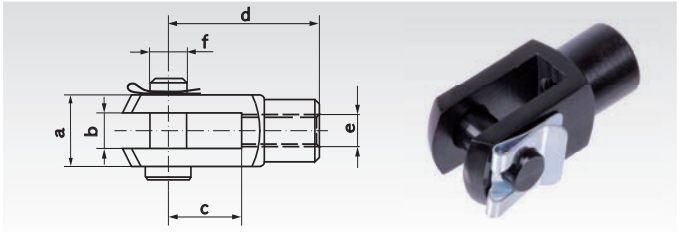

Material: Clevis and bolt aluminium, anodized black.
With SL-Retainer from steel, bright zinc plated.

Ordering Details: e.g.: Product No. 637 664 01, Clevis joint 4 x 8, Aluminium, SL

Clevises similar DIN 71752, Aluminium

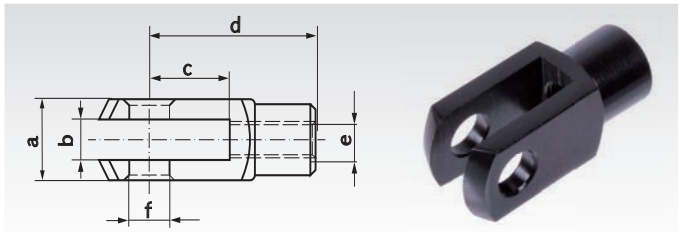

Material: Aluminium, anodized black.
To be used with ES bolt or customer´s bolt.

Ordering Details: e.g.: Product No. 637 662 01, Clevis 4 x 8, Aluminium

Snap-On-Bolts type ES

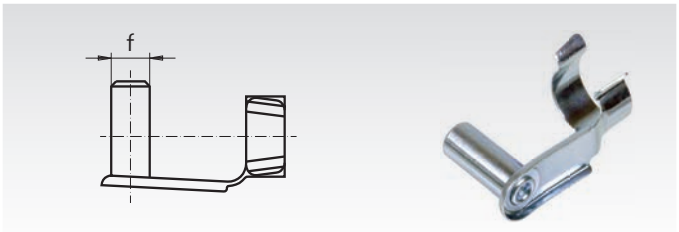

Material: Steel, bright zinc plated.
ES bolt and clevis can be used as fork joint.

Ordering Details: e.g.: Product No. 637 401 00, ES Bolt for Clevis 4 x 8

Product No. Clevis	Product No. ES Bolt	Size mm	a mm	b mm	c mm	d mm	e mm	f mm	Weight Clevis g	Weiht Bolt g
637 662 01	637 401 00	4 x 8	8	4	8	16	M4	4	1,7	1,5
637 662 02	637 402 00	4 x 16	8	4	16	24	M4	4	2,4	2,6
637 662 03	637 403 00	5 x 10	10	5	10	20	M5	5	3,1	2,7
637 662 05	637 405 00	6 x 12	12	6	12	24	M6	6	5,2	4,6
637 662 07	637 407 00	8 x 16	16	8	16	32	M8	8	12,7	10,4
637 662 09	637 409 00	10 x 20	20	10	20	40	M10	10	25,4	19
637 662 11	637 411 00	12 x 24	24	12	24	48	M12	12	41,6	33,5
637 662 13	637 413 00	14 x 28	27	14	28	56	M14	14	61,2	45
637 662 15	637 415 00	16 x 32	32	16	32	64	M16	16	96,9	70

Clevises GD with Rotating Shaft



Bolt Sets KL



Bolt Sets SL



on the internet at www.maedler.de

Clevis Joints similar DIN 71752, Stainless

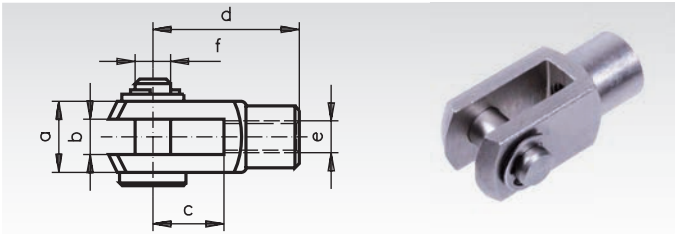

Material: Stainless Steel 1.4305.
Design A: With bolt and circlip.

Ordering Details: e.g.: Product No. 637 990 01, Clevis DIN 71752, A 4 x 8, Right Hand, Stainless

Product No. A Right	Product No. G Right	Size mm	a mm	b mm	c mm	d mm	e mm	f mm	Weights A g	Weights G g
637 990 01	637 992 01	4 x 8	8	4	8	16	M4	4	6	5
637 990 02	637 992 02	4 x 16	8	4	16	24	M4	4	8	7
637 990 03	637 992 03	5 x 10	10	5	10	20	M5	5	10	9
637 990 04	637 992 04	5 x 20	10	5	20	30	M5	5	14	13
637 990 05	637 992 05	6 x 12	12	6	12	24	M6	6	16	15
637 990 06	637 992 06	6 x 24	12	6	24	36	M6	6	23	22
637 990 07	637 992 07	8 x 16	16	8	16	32	M8	8	38	37
637 990 08	637 992 08	8 x 32	16	8	32	48	M8	8	55	54
637 990 09	637 992 09	10 x 20	20	10	20	40	M10	10	80	74
637 990 10	637 992 10	10 x 40	20	10	40	60	M10	10	120	116
637 990 11	637 992 11	12 x 24	24	12	24	48	M12	12	125	121
637 990 12	637 992 12	12 x 48	24	12	48	72	M12	12	180	175
637 990 13	637 992 13	14 x 28	27	14	28	56	M14	14	190	178
637 990 14	637 992 14	14 x 56	27	14	56	85	M14	14	265	258
637 990 15	637 992 15	16 x 32	32	16	32	64	M16	16	300	282
637 990 16	637 992 16	16 x 64	32	16	64	96	M16	16	430	410

Clevises similar DIN 71752, Stainless

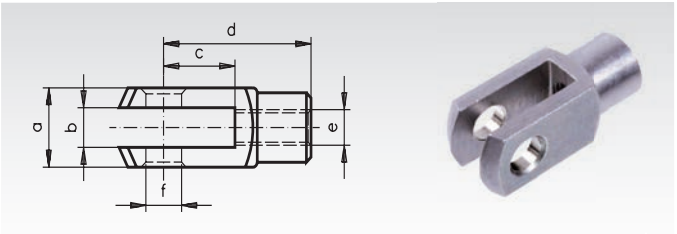

Material: Stainless steel 1.4305.
Design G: Without bolt.

Ordering Details: e.g.: Product No. 637 992 01, Clevis DIN 71752, G 4 x 8, Right Hand, Stainless

Clevis Joints DIN 71752, Steel

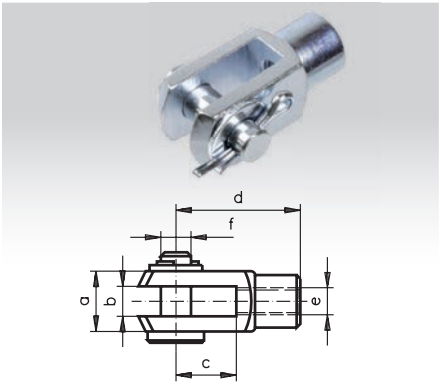

Material: Steel zinc-plated.
Design A: with split pin.

Ordering Details: e.g.: Product No. 637 001 00, Clevis DIN 71752, A 4 x 8 Right Hand

Clevises DIN 71752, Steel

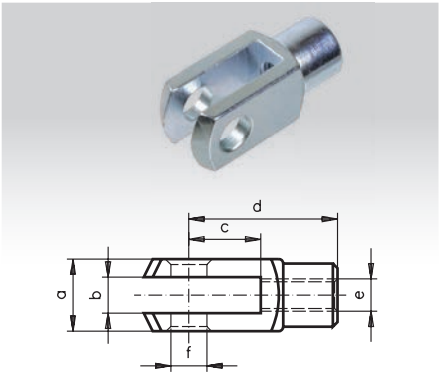

Material: Steel zinc-plated.
Design G: without bolt.

Ordering Details: e.g.: Product No. 637 201 00, Clevis DIN 71752, G 4 x 8 Right Hand

Snap-On-Bolts type ES, Steel

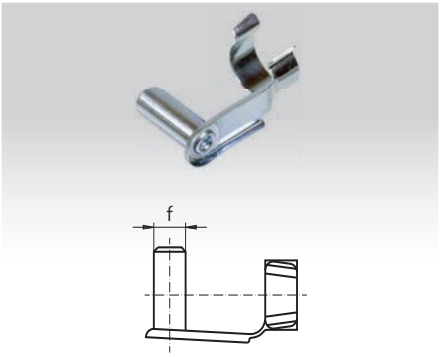

Material: Steel zinc-plated.
ES-Standard 01

Ordering Details: e.g.: Product No. 637 401 00, ES Pin, for G 4 x 8

Product No. A Right	Product No. A Left	Product No. G Right	Product No. G Left	Product No. ES Bolt	Size mm	a mm	b mm	c mm	d mm	e mm	f mm	Weights A g	Weights G g	Weights ES g
637 001 00	637 101 00	637 201 00	637 301 00	637 401 00	4 x 8	8	4	8	16	M4	4	6	5	1,5
637 002 00	637 102 00	637 202 00	637 302 00	637 402 00	4 x 16	8	4	16	24	M4	4	8	7	2,6
637 003 00	637 103 00	637 203 00	637 303 00	637 403 00	5 x 10	10	5	10	20	M5	5	10	9	2,7
637 004 00	637 104 00	637 204 00	637 304 00	637 404 00	5 x 20	10	5	20	30	M5	5	14	13	2,9
637 005 00	637 105 00	637 205 00	637 305 00	637 405 00	6 x 12	12	6	12	24	M6	6	16	15	4,6
637 006 00	637 106 00	637 206 00	637 306 00	637 406 00	6 x 24	12	6	24	36	M6	6	23	22	5
637 007 00	637 107 00	637 207 00	637 307 00	637 407 00	8 x 16	16	8	16	32	M8	8	38	37	10,4
637 008 00	637 108 00	637 208 00	637 308 00	637 408 00	8 x 32	16	8	32	48	M8	8	55	54	11,5
637 009 00	637 109 00	637 209 00	637 309 00	637 409 00	10 x 20	20	10	20	40	M10	10	80	74	19
637 010 00	637 110 00	637 210 00	637 310 00	637 410 00	10 x 40	20	10	40	60	M10	10	120	116	20,3
637 011 00	637 111 00	637 211 00	637 311 00	637 411 00	12 x 24	24	12	24	48	M12	12	125	121	33,5
637 012 00	637 112 00	637 212 00	637 312 00	637 412 00	12 x 48	24	12	48	72	M12	12	180	175	34,5
637 013 00	637 113 00	637 213 00	637 313 00	637 413 00	14 x 28	27	14	28	56	M14	14	190	178	45
637 014 00	637 114 00	637 214 00	637 314 00	637 414 00	14 x 56	27	14	56	85	M14	14	265	258	50
637 015 00	637 115 00	637 215 00	637 315 00	637 415 00	16 x 32	32	16	32	64	M16	16	300	282	70
637 016 00	637 116 00	637 216 00	637 316 00	637 416 00	16 x 64	32	16	64	96	M16	16	430	410	80

Clevis with ES-bolt can be used as fork joint.

Clevis Joints DIN 71752, External Thread, Zinc-Plated

Material: Steel, zinc-plated.

Design A: Right-handed thread, with bolt and split pin.

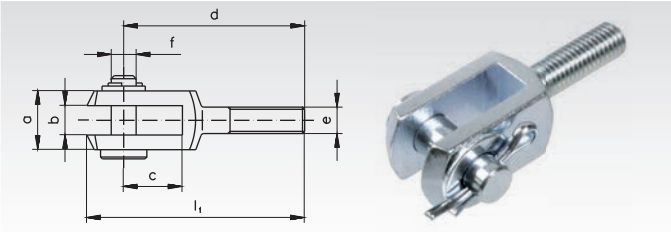

Ordering Details: e.g.: Product No. 637 705 00, Clevis Joint DIN 71752, A, External Thread

Product No. A Right	Size mm	a mm	b mm	c mm	d mm	e mm	f mm	$l_1^{\pm 0,5}$ mm	Weight g
637 705 00	6 x 12	12	6	12	37	M6	6	44	16
637 707 00	8 x 16	16	8	16	47	M8	8	57	38
637 709 00	10 x 20	20	10	20	57	M10	10	69	74
637 711 00	12 x 24	24	12	24	68	M12	12	82	126
637 713 00	14 x 28	27	14	28	78	M14	14	94	183
637 715 00	16 x 32	32	16	32	89	M16	16	108	306

Clevises DIN 71752, External Thread, Zinc Plated

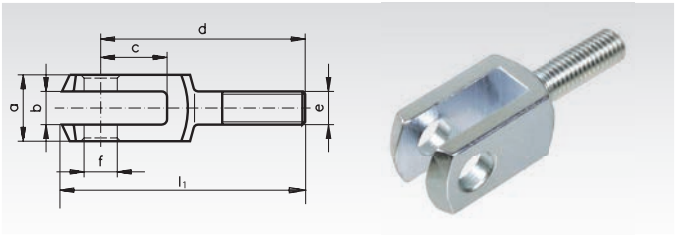

Material: Steel, zinc-plated.

Design G: Right-handed thread, without bolt.

Ordering Details: e.g.: Product No. 637 505 00, Clevis DIN 71752, G, External Thread

Snap-On-Bolts type ES

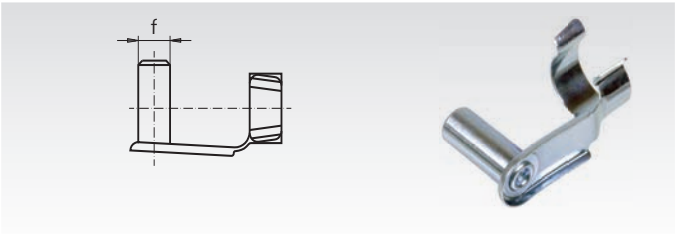

Material: Steel, zinc-plated.

ES bolt and clevis can be used as fork joint.

Ordering Details: e.g.: Product No. 637 405 00, ES Bolt for Clevis 6 x 12

Product No. Clevis	Product No. ES Bolt	Size mm	a mm	b mm	c mm	d mm	e mm	f mm	$l_1^{\pm 0,5}$ mm	Weight Clevis g	Weight ES Bolt g
637 505 00	**637 405 00**	6 x 12	12	6	12	37	M6	6	44	15	14,6
637 507 00	**637 407 00**	8 x 16	16	8	16	47	M8	8	57	36	10,4
637 509 00	**637 409 00**	10 x 20	20	10	20	57	M10	10	69	68	19,0
637 511 00	**637 411 00**	12 x 24	24	12	24	68	M12	12	82	122	33,5
637 513 00	**637 413 00**	14 x 28	27	14	28	78	M14	14	94	171	45,0
637 515 00	**637 415 00**	16 x 32	32	16	32	89	M16	16	108	288	70,0

Mating Pieces with Internal Thread for Clevis Joints DIN 71752, Zinc Plated

Material: Steel zinc-plated.

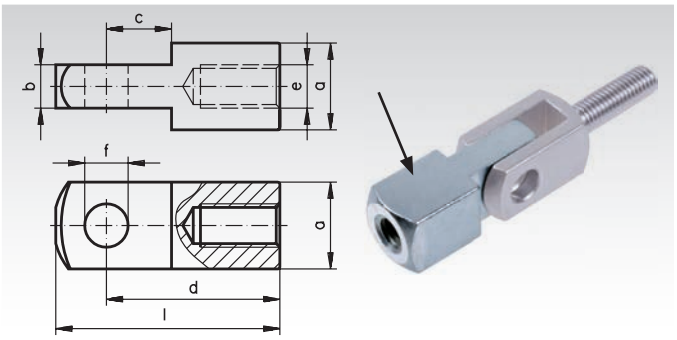

Ordering Details: e.g.: Product No. 637 605 00, Mating piece with Internal Thread, Right-Hand

Product No.	Size mm	a mm	b mm	c mm	d mm	e mm	f mm	$l_1^{\pm 0,5}$ mm	Weight g
637 605 00	6 x 12	12	6	9	24	M6	6	31	21
637 607 00	8 x 16	16	8	12	32	M8	8	42	51
637 609 00	10 x 20	20	10	15	40	M10	10	52	98
637 611 00	12 x 24	24	12	18	48	M12	12	62	168
637 613 00	14 x 28	27	14	21	56	M14	14	72	247
637 615 00	16 x 32	32	16	24	64	M16	16	83	397

Angle Joints DIN 71802, zinc-plated

Material: Steel zinc-plated.

Form C: With threaded bolt and hexagon nut, ball stud hardened.

Form CS: With threaded bolt, hexagon nut and circlip. Ball stud hardened.

Right = Right-hand thread in the socket.

Left = Left-hand thread in the socket.

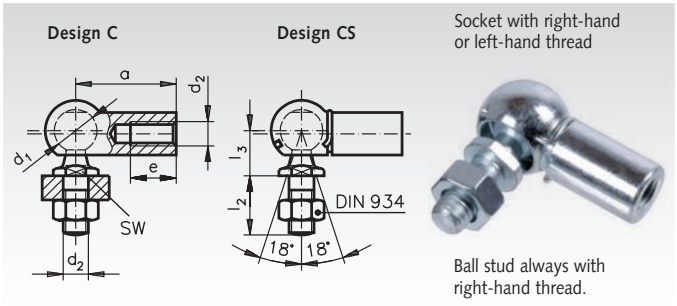

Ordering Details: e.g.: Product No. 636 405 00, Angle Joint DIN 71802, C 8, Right Hand

Product-No. C Rigth	Product-No. CS Right	Product-No. C Left	Product-No. CS Left	$d_1^{H9/h9}$ mm	d_2 mm	SW^{h14} mm	$a^{+0,3}$ mm	e mm	$l_3^{\pm3}$ mm	$l_2^{\pm0,3}$ mm	Pivoting Angle C Degrees	Pivoting Angle CS* Degrees	Weight g
636 405 00	**636 605 00**	**636 505 00**	**636 705 00**	8	M5	7	22	10,2	9	10,2	18°	18°/10°	15,2
636 406 00	**636 606 00**	**636 506 00**	**636 706 00**	10	M6	8	25	11,5	11	12,5	18°	18°/15°	25,2
636 408 00	**636 608 00**	**636 508 00**	**636 708 00**	13	M8	11	30	14	13	16,5	18°	18°/15°	53,1
636 410 00	**636 610 00**	**636 510 00**	**636 710 00**	16	M10	13	35	15,5	16	20	18°	18°/15°	103,8
636 414 00	**636 614 00**	**636 514 00**	**636 714 00**	19	M14x1,5	16	45	21,5	20	28	18°	18°/15°	220,9

* Pivoting angle reduced by circlip.

Angle Joints DIN 71802, Stainless

Material: Stainless steel 1.4305.

Design CS: With threaded bolt, hexagon nut and circlip.

Right = Right-hand thread in the socket.

Left = Left-hand thread in the socket.

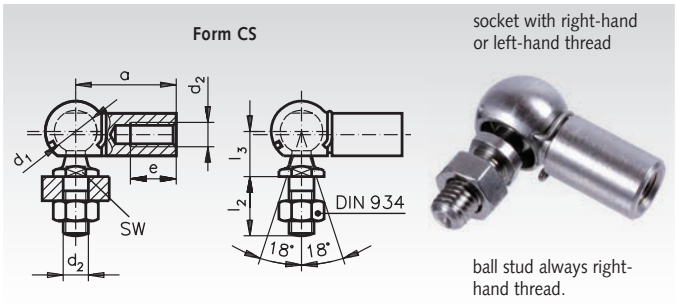

Ordering Details: e.g.: Product No. 636 996 05, Angle Joint DIN 71802, CS 8, Right Hand, Stainless

Product-No. CS Rigth	Product-No. CS Left	$d_1^{H9/h9}$ mm	d_2 mm	SW^{h14} mm	$a^{+0,3}$ mm	e mm	$l_3^{\pm3}$ mm	$l_2^{\pm0,3}$ mm	Pivoting Angle* Degrees	Weight g
636 996 05	**636 997 05**	8	M5	7	22	10,2	9	10,2	18°/10°	15,2
636 996 06	**636 997 06**	10	M6	8	25	11,5	11	12,5	18°/15°	25,2
636 996 08	**636 997 08**	13	M8	11	30	14	13	16,5	18°/15°	53,1
636 996 10	**636 997 10**	16	M10	13	35	15,5	16	20	18°/15°	103,8
636 996 14	**636 997 14**	19	M14x1,5	16	45	21,5	20	28	18°/15°	220,9

* Pivoting angle reduced by circlip.

Sealing Cap for Angle Joints DIN 71802

Material: Neoprene.

The sealing caps have delivered an optimal performance used with joints in very dirty or dusty environment. They also offer good protection against spray water and steam. Temperature range: -30°C to +110°C (short term 140°C).

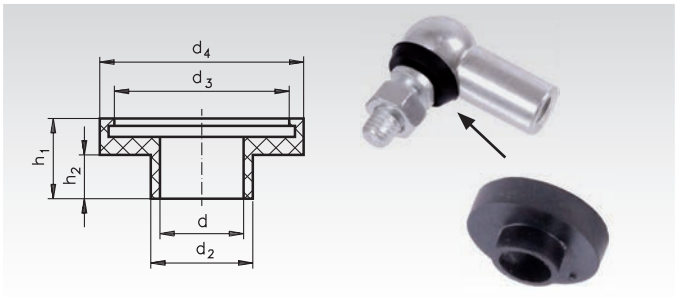

Ordering Details: e.g.: Product No. 636 775 00, Sealing Cap for d_1 8 mm

Product No.	for d_1 DIN 71802 mm	d mm	d_2 mm	d_3 mm	d_4 mm	h_1 mm	h_2 mm	Weight p.% Pcs. g
636 775 00	8	4	5,4	9	11,5	4,5	1,5	32
636 776 00	10	5,5	6,9	10,5	13	6,5	3,5	44
636 778 00	13	7	8,6	14	17	7,5	3,5	86
636 780 00	16	9	10,5	17,5	22	8,5	4,5	116
636 782 00	19	11	12,6	21	25,5	12,5	7	215

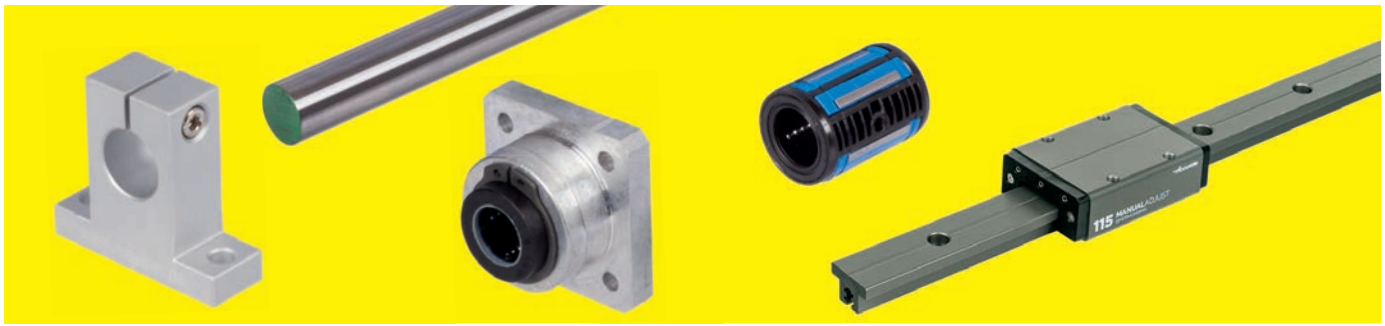

Shaft Steel

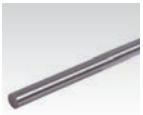
Silver Steel Material No. 1.2210 (115CrV3) according to DIN 175 (h9) ground and polished
Page 477

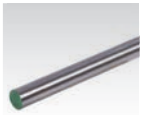
Shaft Steel Hardened and Ground, Material CF53 and CF 53 chromated
Page 478

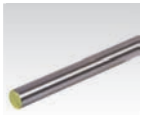
Shaft Steel Hardened and Ground, Material Stainless Steel X46 and X90
Page 478


Shaft Steel with Shaft Support
Page 479

Universal Shaft Blocks


Flange Shaft Blocks GWFL, universal use
Page 480


Flange Shaft Blocks GWF, universal use
Page 480


Shaft Blocks GWL / GWLE, universal use
Page 481

Precision Shaft Blocks and Linear Bearing Units ISO-Series 1


Shaft Blocks GW-1
Page 482


Double Shaft Blocks GWD-1
Page 482


Linear Bearings KB-1
Page 483


Linear Bearing Units KG-1
Page 483


Tandem Linear Bearing Units KGT-1
Page 486


Quadro Linear Bearing Units KGQ-1
Page 486

Precision Shaft Blocks, Shaft Supports and Linear Bearing Units ISO-Series 3


Shaft Blocks GW
Page 487


Shaft Blocks GW-3
Page 487


Double Shaft Blocks GWD-3
Page 488


Precision Housing Open and Closed
Page 493


Linear Bearings Open and Closed
Page 489


Linear Bearings Open and Closed Economy-Line
Page 491

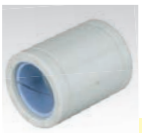
Linear Slide Bearings Open and Closed
Page 492


Linear Bearing Units KG-3-K Closed
Page 494


Linear Bearing Units KG-3-KO Open
Page 494


Linear Bearing Units KG-3-F Closed, Flange Version
Page 495


Linear Bearing Units Open and Closed
Page 496


Tandem Linear Bearing Units Open and Closed
Page 498


Quadro Linear Bearing Units Open and Closed
Page 500

Profiled Track Rollers



Profiled Track Rollers LFR

Page 502



Bolts for Profil Track Rollers

Page 503

Rail-Guide Sets



Precision Rail-Guide Sets RE and RE-ACS

Page 504

Miniature Profile-Rail Guide



Miniature Profile-Rail Guides

Page 505

Miniature Slide Units



Miniature Slide Units

Page 506

Linear motion guide



Friction guides

Page 507

Silver Steel Material Nr. 1.2210 (115CrV3) According to DIN 175 (h9) Ground and Polished

Unhardened, strength 700 - 800 N/mm².
Subsequent hardening of short silver steel workpieces up to 64 HRC is well possible.

Fixed lengths can be delivered on request.



Ordering Details: e.g.: Product No. 647 002 00, Silver Steel 2 mm, 500 mm long

Product No. 0.5 m	Product No. 1 m	Product No. 2 m	Diameter mm	Weight per m kg
647 002 00	647 102 00	647 202 00	2	0,02
647 003 00	647 103 00	647 203 00	3	0,06
647 004 00	647 104 00	647 204 00	4	0,11
647 005 00	647 105 00	647 205 00	5	0,15
647 006 00	647 106 00	647 206 00	6	0,22
647 008 00	647 108 00	647 208 00	8	0,39
-	647 110 00	647 210 00	10	0,62
-	647 112 00	647 212 00	12	0,89
-	647 114 00	647 214 00	14	1,21
-	647 115 00	647 215 00	15	1,38
-	647 116 00	647 216 00	16	1,57
-	647 117 00	647 217 00	17	1,78
-	647 118 00	647 218 00	18	2,00
-	647 119 00	647 219 00	19	2,22
-	647 120 00	647 220 00	20	2,45
-	647 125 00	647 225 00	25	3,83

Precision Shaft Steel, Hardened and Ground, on choice chromed

Material CF53: Steel 1.1213 (CF53), hardness min. 59 HRC.
Diameter tolerance: ISO h6.

Material CF53 CR: Steel 1.1213 (CF53), hardness min. 59 HRC, chrome plated 10 µm, chrome-hardness min. 800 HV, without CR(VI), suitable for food and medical industry.
Diameter tolerance: ISO h7.

Dimension-stable up to +120°C.

In lengths of 1 m and 2 m available ex stock.
Fixed lengths can be delivered on request.

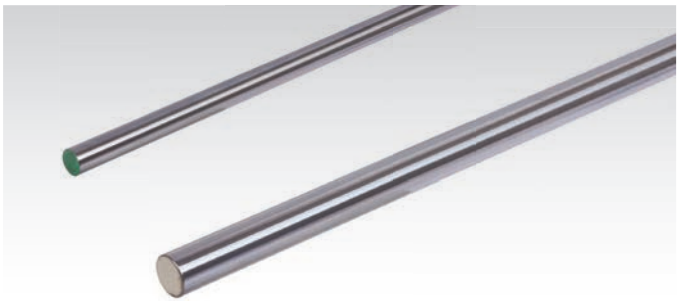

Ordering Details: e.g.: Product No. 647 405 00, Shaft Steel CF53, 5 mm, length 1 m

Product No. CF53 1 m	Product No. CF53 2 m	Product No. CF53 CR 1 m	Product No. CF 53 CR 2 m	Shaft-Diameter mm	Hardness Depth DIN 13012 mm min.	Weight Length 1m kg	Weight Length 2m kg
647 403 01*	-	-	-	3	0,4	0,059	-
647 404 01	-	-	-	4	0,4	0,098	-
647 405 00	-	647 605 00	-	5	0,4	0,154	-
647 406 00	-	647 606 00	-	6	0,4	0,222	-
647 408 00	647 508 00	647 608 00	647 708 00	8	0,4	0,394	0,788
647 410 00	647 510 00	647 610 00	647 710 00	10	0,4	0,616	1,232
647 412 00	647 512 00	647 612 00	647 712 00	12	0,6	0,888	1,776
647 414 00	647 514 00	647 614 00	647 714 00	14	0,6	1,208	2,416
647 416 00	647 516 00	647 616 00	647 716 00	16	0,6	1,578	3,156
647 420 00	647 520 00	647 620 00	647 720 00	20	0,9	2,466	4,932
647 425 00	647 525 00	647 625 00	647 725 00	25	0,9	3,853	7,706
647 430 00	647 530 00	647 630 00	647 730 00	30	0,9	5,549	11,098
647 440 00	647 540 00	647 640 00	647 740 00	40	1,5	9,864	19,728
647 450 00	647 550 00	647 650 00	647 750 00	50	1,5	15,413	30,826

* Ø 3mm made from material 100CR6.

Precision Shaft Steel, Stainless, Hardened and Ground

Material X46: Stainless Steel 1.4043 (X46Cr13), min. 52 HRC.

Material X90: Stainless Steel 1.4112 (X90CrMoV18), min. 54 HRC.

Diameter tolerance: ISO h6.

Dimension-stable up to +120°C.

In lengths of 1 m and 2 m available ex stock.
Fixed lengths can be delivered on request.



Ordering Details: e.g.: Product No. 647 992 06, Shaft Steel X46, 6 mm, length 1 m

Product No. X46 STAINLESS 1 m	Product No. X46 STAINLESS 2 m	Product No. X90 STAINLESS 1 m	Product No. X90 STAINLESS 2 m	Shaft-Diameter mm	Hardness Depth DIN 13012 mm min.	Weight Length 1m kg	Weight Length 2m kg
-	-	647 994 04	-	4	0,4	0,098	-
-	-	647 994 05	-	5	0,4	0,154	-
647 992 06	-	647 994 06	-	6	0,4	0,222	-
647 992 08	647 993 08	647 994 08	647 995 08	8	0,4	0,394	0,788
647 992 10	647 993 10	647 994 10	647 995 10	10	0,4	0,616	1,232
647 992 12	647 993 12	647 994 12	647 995 12	12	0,6	0,888	1,776
647 992 14	647 993 14	647 994 14	647 995 14	14	0,6	1,208	2,416
647 992 16	647 993 16	647 994 16	647 995 16	16	0,6	1,578	3,156
647 992 20	647 993 20	647 994 20	647 995 20	20	0,9	2,466	4,932
647 992 25	647 993 25	647 994 25	647 995 25	25	0,9	3,853	7,706
647 992 30	647 993 30	647 994 30	647 995 30	30	0,9	5,549	11,098
647 992 40	647 993 40	647 994 40	647 995 40	40	1,5	9,864	19,728
647 992 50	647 993 50	647 994 50	647 995 50	50	1,5	15,413	30,826

Dimension Tolerances for shafts with Ø-tolerance h6

		Shaft Diameter													
		3 mm	4 mm	5 mm	6 mm	8 mm	10 mm	12 mm	14 mm	16 mm	20 mm	25 mm	30 mm	40 mm	50 mm
Diameter	[µm]	0,6	-8	-8	-8	-9	-9	-11	-11	-11	-13	-13	-13	-16	-16
Straightness	[mm/m]	0,3	0,3	0,2	0,2	0,2	0,1	0,1	0,1	0,1	0,1	0,1	0,1	0,1	0,1
Roundness	[µm]	3	4	4	4	4	4	5	5	5	6	6	6	7	7
Parallelity	[µm]	4	5	5	5	6	6	8	8	8	9	9	9	11	11

Precision Shaft Steel with Shaft Support, Low Version

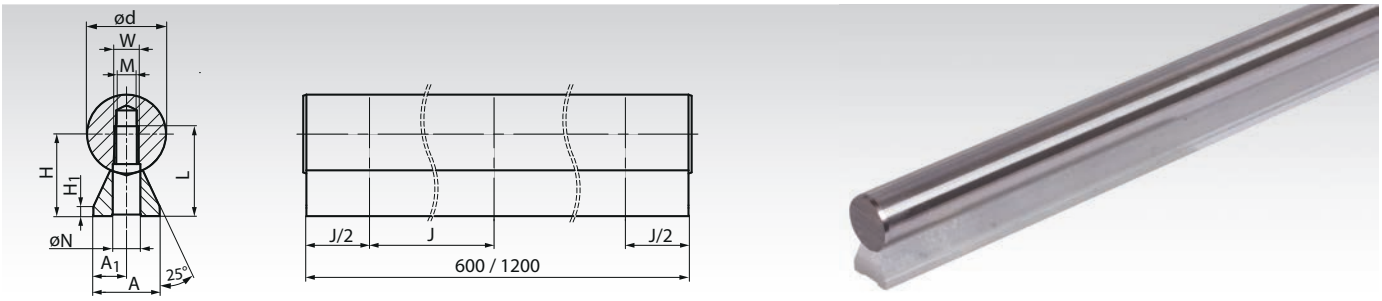

Material shaft: Steel 1.1213 (Cf53), hardened and ground, hardness 62±2 HRC, diameter tolerance ISO h6.

Material support: Extruded aluminium.

Length: Either 600 mm or 1200 mm.
Delivery without mounting screws.

Ready-to-install, supported linear shafts to be used with open linear bearings or open linear bearing units. The shafts are supported over the entire length. Unit can be shortened by the customer using an angle grinder. The shaft supports have internal threads to get mounted from the downside of the customer´s base plate. The required screw lenght depends also on the thickness of the base plate. Longer versions on request.

Ordering Details: e.g.: Product No. 647 412 05, Shaft with Support, Low Version, Ø 12 mm, Length 600 mm

Product No. Length 600 mm	Product No. Length 1200 mm	d mm	A mm	A_1 mm	$H^{\pm 0,15}$ mm	H_1 mm	J mm	M mm	N mm	L mm	W mm	Weight 600 mm g	Weight 1200 mm g
647 412 05	**647 412 06**	12	11	6	14,5	3	75	M4	4,5	15,5	5,4	660	1320
647 416 05	**647 416 06**	16	14	7	18	3	75	M5	5,5	16	7	1200	2400
647 420 05	**647 420 06**	20	17	8,5	22	3	75	M6	6,6	20	8,1	1790	3580
647 425 05	**647 425 06**	25	21	10,5	26	3	75	M8	9	25	10,3	2670	5340
647 430 05	**647 430 06**	30	23	11,5	30	3	100	M10	11	30	11	3760	7520
647 440 05	**647 440 06**	40	30	15	39	4	100	M12	13,5	38	15	6440	12880

Precision Shaft Steel with Shaft Support

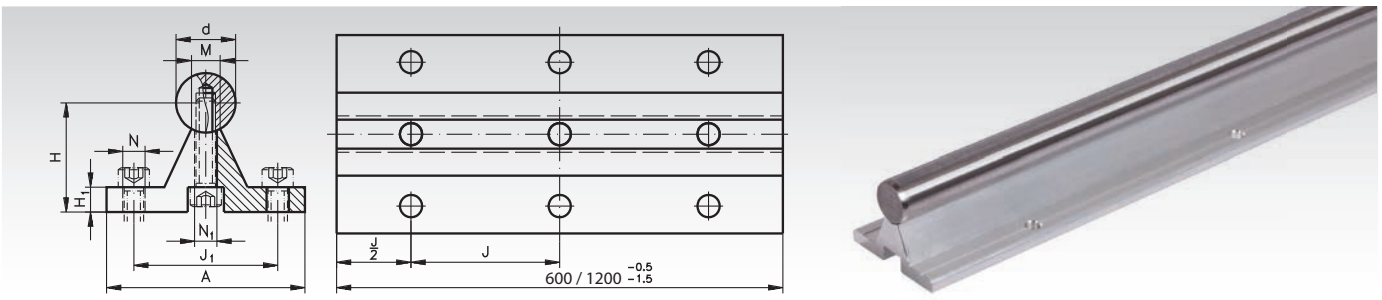

Material shaft: Steel 1.1213 (Cf53), hardened and ground, hardness 62±2 HRC, diameter tolerance ISO h6.

Material support: Extruded aluminium.

Length: Either 600 mm or 1200 mm.

Ready-to-use, mounted, supported linear shafts to be used with open linear bearings or open linear bearing units. The shafts are supported over the entire length. The shaft supports have mounting holes for mounting them on a base plate. Unit can be shortened by the customer using an angle grinder. Longer versions on request.

Ordering Details: e.g.: Product No. 647 412 03, Shaft with Support, Ø 12 mm, Length 600 mm

Product No. Length 600 mm	Product No. Length 1200 mm	d mm	A mm	$H^{\pm 0,15}$ mm	H_1 mm	J mm	J_1 mm	M mm	N mm	N_1 mm	ß Degrees	Mounting Screw DIN 912	Weight 600 mm g	Weight 1200 mm g
647 412 03	**647 412 04**	12	40	22	5	75	29	5,8	4,5	4,5	50	M4x16	1080	2160
647 416 03	**647 416 04**	16	45	26	5	100	33	7	5,5	5,5	50	M5x20	1610	3220
647 420 03	**647 420 04**	20	52	32	6	100	37	8,3	6,6	6,6	50	M6x25	2444	4888
647 425 03	**647 425 04**	25	57	36	6	120	42	10,8	6,6	9	50	M8x25	3460	6920
647 430 03	**647 430 04**	30	69	42	7	150	51	11	9	11	50	M10x30	4840	9680
647 440 03	**647 440 04**	40	73	50	8	200	55	15	9	11	50	M10x35	7820	15640
647 450 03	**647 450 04**	50	84	60	9	200	63	19	11	13,5	46	M12x40	11780	23560



Reworking within 24h-service possible. Custom made parts on request.

Flange Shaft Block GWFL universal use, low-cost type

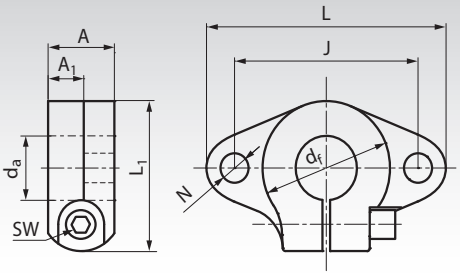



Material: Extruded Aluminium.
Clamp screw strength 8.8, Steel zinc-plated.

Universel use shaft blocks,
e.g. for flange fastening of guide shafts.

Ordering Details: e.g.: Product No. 646 405 10, Flange Shaft Block GWFL, for Shaft-Ø 10 mm

Product No.	d_a mm	L mm	A mm	A_1 mm	d_f mm	J mm	L_1 mm	N mm	Clamp-screw DIN 912	sw mm	Weight g
646 405 10	10	43	10	5	20	32	24	5,5	M4	3	13
646 405 12	12	47	13	7	25	36	28	5,5	M4	3	20
646 405 14	14	47	13	7	25	36	28	5,5	M4	3	18
646 405 16	16	50	16	8	28	40	31	5,5	M4	3	27
646 405 20	20	60	20	8	34	48	37	7	M5	4	40
646 405 25	25	70	25	10	40	56	42	7	M5	4	60
646 405 30	30	80	30	12	46	64	50	9	M6	5	110
646 405 40	40	105	40	16	56	80	67	12	M10	8	510
646 405 50	50	122	50	19	70	96	83	14	M12	10	890

Flange Shaft Blocks GWF universal use

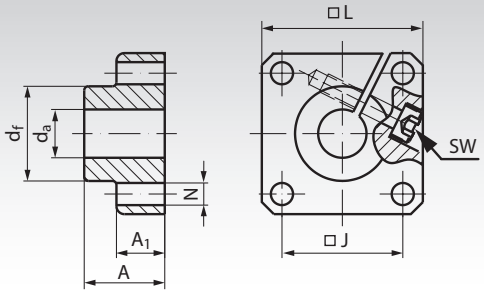



Material: Extruded aluminium.
Clamp screw strength 8.8, steel zinc-plated.

Universal use shaft blocks,
e.g. for flange connection of guide shafts.

Ordering Details: e.g.: Product No. 646 401 12, Flange Blocks for Shaft-Ø 12 mm

Product No.	d_a mm	L mm	A mm	A_1 mm	d_f mm	J mm	N^{H13} mm	Clamp-screw DIN 912	sw mm	Weight g
646 401 12	12	40	20	12	23,5	$30^{\pm 0,12}$	5,5	M4	3	60
646 401 16	16	50	20	12	27,5	$35^{\pm 0,12}$	5,5	M4	3	80
646 401 20	20	50	23	14	33,5	$38^{\pm 0,15}$	6,6	M5	4	100
646 401 25	25	60	25	16	42,0	$42^{\pm 0,15}$	6,6	M6	5	150
646 401 30	30	70	30	19	49,5	$54^{\pm 0,25}$	9,0	M8	6	300
646 401 40	40	100	40	26	65,0	$68^{\pm 0,25}$	11,0	M10	8	700
646 401 50	50	100	50	36	75,0	$75^{\pm 0,25}$	11,0	M10	8	1200

Shaft Block GWL universal use, low-cost type

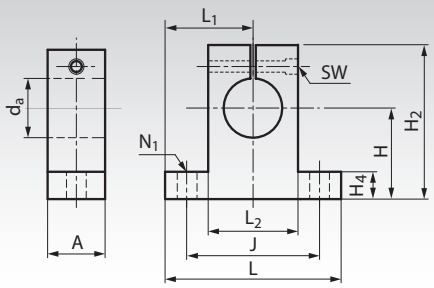



Material: Extruded Aluminium.
Clamp screw strength 8.8, Steel zinc-plated.

Universel use shaft blocks,
e.g. for fastening of guide shafts.

Ordering Details: e.g.: Product No. 646 406 08, Shaft Block GWL, for Shaft-Ø 8 mm

Product No.	d_a mm	A mm	$H^{\pm 0,02}$ mm	H_2 mm	H_4 mm	J mm	L mm	$L_1^{\pm 0,05}$ mm	L_2 mm	N_1 mm	Clamp-screw DIN 912	sw mm	Weight g
646 406 08	8	14	20	32,8	6	32	42	21	18	5,5	M4	3	24
646 406 10	10	14	20	32,8	6	32	42	21	18	5,5	M4	3	24
646 406 12	12	14	23	37,5	6	32	42	21	20	5,5	M4	3	30
646 406 14	14	14	23	37,5	6	32	42	21	20	5,5	M4	3	28
646 406 16	16	16	27	44	8	38	48	24	25	5,5	M4	3	40
646 406 20	20	20	31	51	10	45	60	30	30	6,6	M5	4	70
646 406 25	25	24	35	60	12	56	70	35	38	6,6	M6	5	130
646 406 30	30	28	42	70	12	64	84	42	44	9	M6	5	180
646 406 40	40	36	60	96	15	90	114	57	60	11	M8	6	420
646 406 50	50	40	70	120	18	100	126	63	74	14	M12	10	750

Shaft Block GWLE universal use, European Dimensions

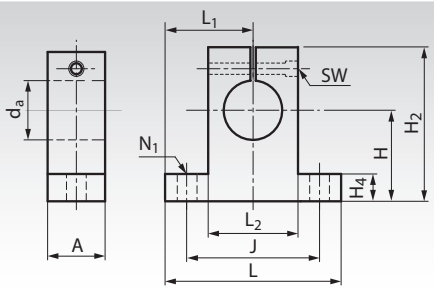



Material: Extruded Aluminium.
Clamp screw strength 8.8, Steel zinc-plated.

Universel use shaft blocks,
e.g. for fastening of guide shafts.

Ordering Details: e.g.: Product No. 646 407 08, Shaft Block GWLE, for Shaft-Ø 8 mm

Product No.	d_a mm	A mm	$H^{\pm 0,02}$ mm	H_2 mm	H_4 mm	J mm	L mm	$L_1^{\pm 0,05}$ mm	L_2 mm	N_1 mm	Clamp-screw DIN 912	sw mm	Weight g
646 407 08	8	10	15	27	5	25	32	16	16	4,5	M3	2,5	24
646 407 12	12	12	20	35	5,5	32	42	21	20	5,5	M4	3	30
646 407 16	16	16	25	42	6,5	40	50	25	26	5,5	M4	3	40
646 407 20	20	20	30	50	8	45	60	30	32	5,5	M4	3	70
646 407 25	25	25	35	58	9	60	74	37	38	6,6	M5	4	130
646 407 30	30	28	40	68	10	68	84	42	45	9	M6	5	180
646 407 40	40	32	50	86	12	86	108	54	56	11	M8	6	420
646 407 50	50	40	60	100	14	108	130	65	80	11	M8	6	750



Reworking within 24h-service possible. Custom made parts on request.

Precision Shaft Blocks GW-1 ISO Series 1

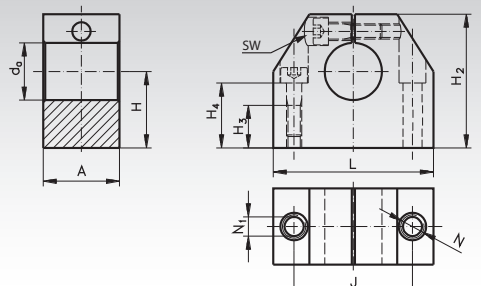

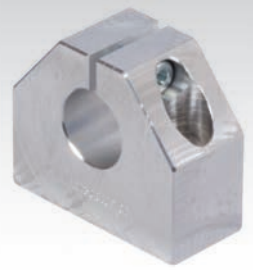

Material: Extruded aluminium.

Matching linear-bearing units of ISO Series 1.

Robust machine elements to attach the guiding shaft of the linear bearings. They allow true to size and cost efficient constructions.

Ordering Details: e.g.: Product No. 646 406 06, Precision Shaft Block GW-1, for Shaft-Ø 6 mm

Product No.	d_a mm	A mm	$H^{\pm 0,02}$ mm	H_2 mm	H_3 mm	H_4 mm	$J^{\pm 0,12}$ mm	L mm	N_1 mm	N* mm	sw mm	Weight g
646 406 06	6	16	15	27	11	13	22	32	4,2	M5	2,5	30
646 408 08	8	16	16	27	11	13	22	32	4,2	M5	2,5	30
646 410 10	10	18	18	33	13	16	27	40	5,2	M6	3	50
646 412 12	12	18	19	33	13	16	27	40	5,2	M6	3	50
646 414 14	14	20	20	38	13	18	32	45	5,2	M6	3	70
646 416 16	16	20	22	38	13	18	32	45	5,2	M6	3	70
646 420 20	20	24	25	45	18	22	39	53	6,8	M8	4	120
646 425 25	25	28	31	54	22	26	44	62	8,6	M10	5	170
646 430 30	30	30	34	60	22	29	49	67	8,6	M10	5	220
646 440 40	40	40	42	76	26	38	66	87	10,3	M12	6	480
646 450 50	50	50	50	92	34	46	80	103	14,25	M16	8	820

Shaft steel page 478.

* When mounting from above choose the next smaller screw size.

Precision Double Shaft Blocks GWD-1 ISO Series 1

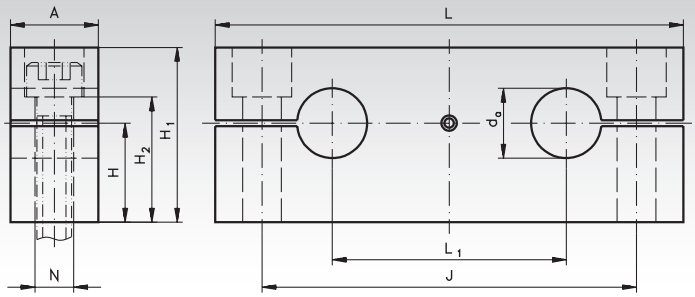



Material: Extruded aluminium.

Matching quadro linear-bearing units KGQ-1 of the ISO Series 1, page 486.

Robust machine elements to attach the guiding shafts of the linear bearings. They allow true to size and cost efficient constructions.

Ordering Details: e.g.: Product No. 646 402 12, Precision Shaft Block GWD-1 for Shaft-Ø 12 mm

Product No.	d_a mm	A mm	$H^{\pm 0,02}$ mm	H_1 mm	H_2 mm	$J^{\pm 0,02}$ mm	L mm	L_1 mm	N* mm	Weight g
646 402 12	12	15	17	30	21,5	64	80	40	6,6	80
646 402 16	16	15	19,5	35	26,5	80	96	52	6,6	110
646 402 20	20	18	22	40	29	97	115	63	9	170
646 402 25	25	20	27	50	36,5	115	136	75	11	280
646 402 30	30	20	31	56	42,5	125	146	80	11	320
646 402 40	40	25	38	70	54	160	184	97	13,5	630
646 402 50	50	30	43	80	59	180	210	107	17,5	900

Shaft steel page 478.

* For cylindrical screws with Allen screw according to DIN 912 or ISO 4762.

Linear Bearings KB-1 ISO Series 1

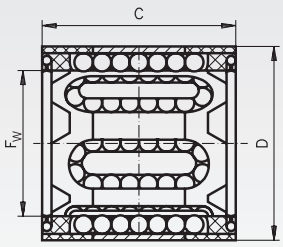

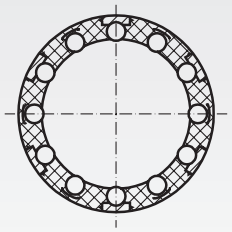





Linear bearings Series 1 of ISO standard 10285 from premium brand in top quality.

Especially compact dimensions enable a space-saving and cost efficient linear support. Easy to mount and provide automatic retention in the mounting bore. I.e., if the boring in the housing is exact, the bearing does not to be secured axially. Either with integral double-lip seal or with shields. Bearings up to FW 5mm must be lubricated before use.
All other bearings are lubricated ready-to-install.

Recommended shaft tolerance h6, housing tolerance H6 or JS6.

Ordering Details: e.g.: Product No. 646 003 03, Linear Bearing KB-1, Internal Ø 3 mm, with Shields

Product No. with Shields	Product No. with Seals	F_w	D	C	Number of Rows of Balls	Load Rating* dyn. C	Load Rating* stat. C_0	Weight
		mm	mm	mm		N	N	g
646 003 03	**646 103 03**	3	7	10	4	60	44	0,7
646 004 04	**646 104 04**	4	8	12	4	75	60	1
646 005 05	**646 105 05**	5	10	15	4	170	129	2
646 006 06	**646 106 06**	6	12	22	4	335	270	6
646 008 08	**646 108 08**	8	15	24	4	490	355	7
646 010 10	**646 110 10**	10	17	26	5	585	415	11
646 012 12	**646 112 12**	12	19	28	5	695	510	12
646 014 14	**646 114 14**	14	21	28	5	710	530	14
646 016 16	**646 116 16**	16	24	30	5	930	630	18
646 020 20	**646 120 20**	20	28	30	6	1160	800	21
646 025 25	**646 125 25**	25	35	40	7	2120	1560	47
646 030 30	**646 130 30**	30	40	50	8	3150	2700	70
646 040 40	**646 140 40**	40	52	60	8	5500	4500	130
646 050 50	**646 150 50**	50	62	70	9	6950	6300	180

* On stainless shafts, the dynamic load rating has to be reduced by 18%, the static load rating by 8%,

Shaft steel page 478.
Shaft blocks page 480

Linear Bearings Units KG-1 ISO Series 1, with a Linear Bearing

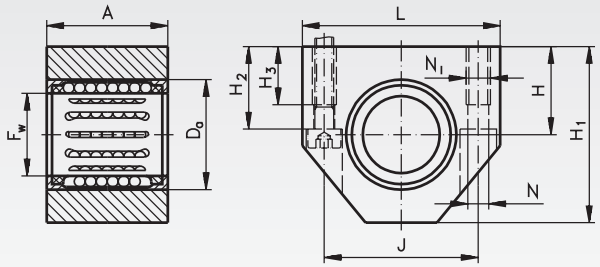

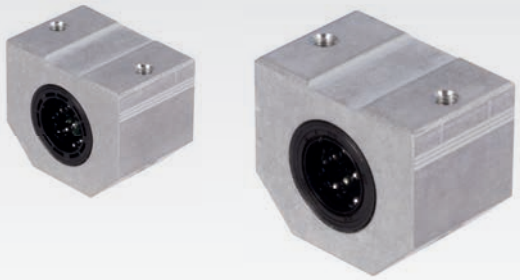

Material: Housing made from extruded aluminium with a compact linear bearing of the ISO Series 1 from premium brand in top quality.

With integral double-lip seal or with shields.
All bearings are lubricated ready-to-install.
Recommended shaft tolerance h6.

Ordering Details: e.g.: Product No. 646 506 06, Linear Bearings Unit KG-1, Internal Ø 6 mm, with Shields

Product No. with Shields	Product No. with Seals	F_w	A	D_a	$H^{\pm 0,02}$	H_1	H_2	H_3	L	J	N	N_1*	Load Rating $C_{dyn.}$	Load Rating stat. C_0	Weight	Spare Linear Bearings with Shields	Spare Linear Bearings with Seals
		mm	mm	mm	mm	mm	mm	mm	mm	mm	mm	mm	N	N	g		
646 506 06	**646 606 06**	6	22**	12	13**	27**	13	9	32	23**	3,4	M4	335	270	50	**646 006 06**	**646 106 06**
646 508 08	**646 608 08**	8	24	15	14**	27	13	9	32	23**	3,4	M4	490	355	50	**646 008 08**	**646 108 08**
646 510 10	**646 610 10**	10	26	17	16	33**	16	11	40**	29**	4,3	M5	585	415	80	**646 010 10**	**646 110 10**
646 512 12	**646 612 12**	12	28	19	17	33	16	11	40	29	4,3	M5	695	510	90	**646 012 12**	**646 112 12**
646 514 14	**646 614 14**	14	28	21	18	36,5	18	11	43	34	4,3	M5	710	530	100	**646 014 14**	**646 114 14**
646 516 16	**646 616 16**	16	30	24	19	38	18	11	45	34	4,3	M5	930	630	100	**646 016 16**	**646 116 16**
646 520 20	**646 620 20**	20	30	28	23	45	22	13	53	40	5,3	M6	1160	800	140	**646 020 20**	**646 120 20**
646 525 25	**646 625 25**	25	40	35	27	54	26	18	62	48	6,6	M8	2120	1560	250	**646 025 25**	**646 125 25**
646 530 30	**646 630 30**	30	50	40	30	60	29	18	67	53	6,6	M8	3150	2700	370	**646 030 30**	**646 130 30**
646 540 40	**646 640 40**	40	60	52	39	76	38	22	87	69	8,4	M10	5500	4500	740	**646 040 40**	**646 140 40**
646 550 50	**646 650 50**	50	70	62	47	92	46	26	103	82	10,5	M12	6950	6300	1190	**646 050 50**	**646 150 50**

* When mounting from the bottom side choose the next smaller screw size.
** Dimension not in accordance with DIN ISO 13012-1.

Shaft steel page 478. Shaft blocks page 480.

Linear Bearings KB-1 ISO Series 1, Economy-Line

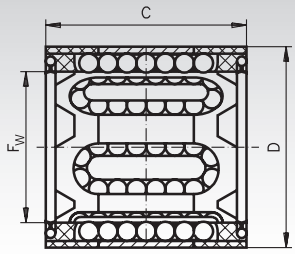

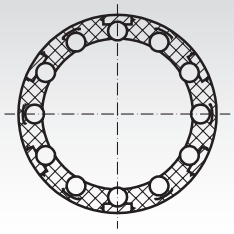



Linear bearings from reliable brand in good quality at low price.

These linear bearings can be fitted inside a customer´s housing or as spare parts for our closed Economy-Line units.

With wiping double-lip seals.

These bearings are self-aligning up to +/- 0,5°.

All bearings must be lubricated before use.
Recommended shaft tolerance h6, housing tolerance H6 or JS6.

Ordering Details: e.g.: Product No. 646 306 06, Linear Bearing KB-1 Economy-Line, Internal Ø 6mm

Product No. with seals	F_w mm	D mm	C mm	Load Rating* dyn. C N	Load Rating* stat. C_o N	Weight g
646 306 06	6	12	22	400	239	7
646 308 08	8	15	24	441	280	12
646 310 10	10	17	26	500	370	14,5
646 312 12	12	19	28	620	510	18,5
646 314 14	14	21	28	620	520	20,5
646 316 16	16	24	30	800	620	27,5
646 320 20	20	28	30	950	790	32,5
646 325 25	25	35	40	1990	1670	66
646 330 30	30	40	50	2800	2700	95
646 340 40	40	52	60	4400	4450	182
646 350 50	50	62	70	5500	6300	252

Shaft steel with shaft support page 478.
Shaft blocks page 480.

Linear Bearings Units KG-1 ISO Series 1, Economy-Line, with a Linear Bearing

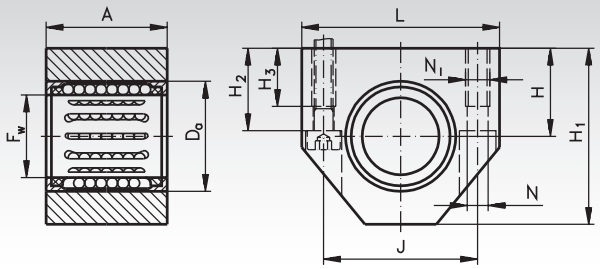



Material: Housing made from extruded aluminium with a compact linear bearing of the ISO Series 1. From reliable brand in good quality at low price. With integral double-lip seal.

All bearings are lubricated ready-to-install.
Recommended shaft tolerance h6.

Ordering Details: e.g.: Product No. 646 806 06, Linear Bearings Unit KG-1 Economy-Line, Internal Ø 6 mm

Product No. with seals	F_w mm	A mm	D_a mm	$H^{\pm 0,02}$ mm	H_1 mm	H_2 mm	H_3 mm	L mm	J mm	N mm	N_1* mm	Load Rating dyn. C N	Load Rating stat. C_0 N	Weight g	Product No. Spare Linear Bearings
646 806 06	6	22**	12	13**	27**	13	9	32	23**	3,4	M4	400	239	50	**646 306 06**
646 808 08	8	24	15	14**	27	13	9	32	23**	3,4	M4	435	280	50	**646 308 08**
646 810 10	10	26	17	16	33**	16	11	40**	29**	4,3	M5	500	370	80	**646 310 10**
646 812 12	12	28	19	17	33	16	11	40	29	4,3	M5	620	510	90	**646 312 12**
646 814 14	14	28	21	18	36,5	18	11	43	34	4,3	M5	620	520	100	**646 314 14**
646 816 16	16	30	24	19	38	18	11	45	34	4,3	M5	800	620	110	**646 316 16**
646 820 20	20	30	28	23	45	22	13	53	40	5,3	M6	950	790	150	**646 320 20**
646 825 25	25	40	35	27	54	26	18	62	48	6,6	M8	1990	1670	290	**646 325 25**
646 830 30	30	50	40	30	60	29	18	67	53	6,6	M8	2800	2700	420	**646 330 30**
646 840 40	40	60	52	39	76	38	22	87	69	8,4	M10	4400	4450	790	**646 340 40**
646 850 50	50	70	62	47	92	46	26	103	82	10,5	M12	5500	6300	1290	**646 350 50**

* When mounting from the bottom side choose the next smaller screw size.
** Dimension not in accordance with DIN ISO 13012-1.

Shaft steel page 478. Shaft blocks page 480.

Linear Bearings KB-1 ISO Series 1, Stainless

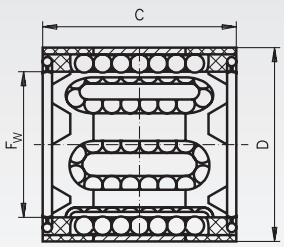

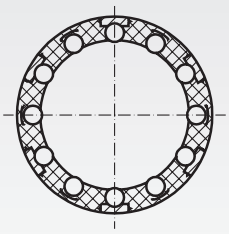





Stainless linear bearings Series 1 of ISO standard 10285 from premium brand in top quality.

Especially compact dimensions enable a space-saving and cost efficient linear support. Easy to mount and provide automatic retention in the mounting bore. I.e., if the boring in the housing is exact, the bearing does not to be secured axially. Either with integral double-lip seal or with shields. Bearings up to FW 5mm must be lubricated before use.
All other bearings are lubricated ready-to-install.

Recommended shaft tolerance h6, housing tolerance H6 or JS6.

Ordering Details: e.g.: Product No. 646 998 03, Linear Bearing KB-1, Internal Ø 3 mm, with Shields, stainless

Product No. with Shields	Product No. with Seals	F_w	D	C	Number of Rows of Balls	Load Rating* dyn. C	Load Rating* stat. C_0	Weight
		mm	mm	mm		N	N	g
646 998 03	**646 999 03**	3	7	10	4	49	40	0,7
646 998 04	**646 999 04**	4	8	12	4	62	55	1
646 998 05	**646 999 05**	5	10	15	4	139	119	2
646 998 06	**646 999 06**	6	12	22	4	275	248	6
646 998 08	**646 999 08**	8	15	24	4	402	327	7
646 998 10	**646 999 10**	10	17	26	5	480	382	11
646 998 12	**646 999 12**	12	19	28	5	570	469	12
646 998 14	**646 999 14**	14	21	28	5	582	488	14
646 998 16	**646 999 16**	16	24	30	5	763	580	18
646 998 20	**646 999 20**	20	28	30	6	951	736	21
646 998 25	**646 999 25**	25	35	40	7	1738	1435	47
646 998 30	**646 999 30**	30	40	50	8	2583	2484	70
646 998 40	**646 999 40**	40	52	60	8	4510	4140	130
646 998 50	**646 999 50**	50	62	70	9	5699	5796	180

* On stainless shafts X90.

Shaft steel page 478.
Shaft blocks page 480.

Linear Bearings Units KG-1 ISO Series 1, with a Linear Bearing, Stainless

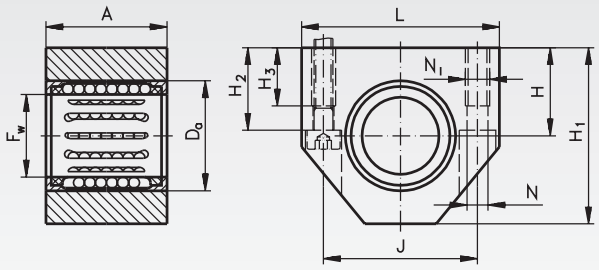





Material: Housing made from extruded aluminium with a stainless linear bearing of the ISO Series 1 from premium brand in top quality.

With integral double-lip seal or with shields.
All bearings are lubricated ready-to-install.
Recommended shaft tolerance h6.

Ordering Details: e.g.: Product No. 646 995 06, Linear Bearings Unit KG-1, Internal Ø 6 mm, with Shields, stainless

Product No. with Shields	Product No. with Seals	F_w	A	D_a	$H^{\pm 0.01}$	H_1	H_2	H_3	L	J	N	N_l*	Load Rating* dyn.C	Load Rating* stat.C_0	Weight	Spare Linear Bearings with Shields	Spare Linear Bearings with Seal
		mm	mm	mm	mm	mm	mm	mm	mm	mm	mm	mm	N	N	g		
646 995 06	**646 996 06**	6	22**	12	13**	27**	13	9	32	23**	3,4	M4	275	248	50	**646 998 06**	**646 999 06**
646 995 08	**646 996 08**	8	24	15	14**	27	13	9	32	23**	3,4	M4	402	327	50	**646 998 08**	**646 999 08**
646 995 10	**646 996 10**	10	26	17	16	33**	16	11	40**	29**	4,3	M5	480	382	80	**646 998 10**	**646 999 10**
646 995 12	**646 996 12**	12	28	19	17	33	16	11	40	29	4,3	M5	570	469	90	**646 998 12**	**646 999 12**
646 995 14	**646 996 14**	14	28	21	18	36,5	18	11	43	34	4,3	M5	582	488	100	**646 998 14**	**646 999 14**
646 995 16	**646 996 16**	16	30	24	19	38	18	11	45	34	4,3	M5	763	580	100	**646 998 16**	**646 999 16**
646 995 20	**646 996 20**	20	30	28	23	45	22	13	53	40	5,3	M6	951	736	140	**646 998 20**	**646 999 20**
646 995 25	**646 996 25**	25	40	35	27	54	26	18	62	48	6,6	M8	1738	1435	250	**646 998 25**	**646 999 25**
646 995 30	**646 996 30**	30	50	40	30	60	29	18	67	53	6,6	M8	2583	2484	370	**646 998 30**	**646 999 30**
646 995 40	**646 996 40**	40	60	52	39	76	38	22	87	69	8,4	M10	4510	4140	740	**646 998 40**	**646 999 40**
646 995 50	**646 996 50**	50	70	62	47	92	46	26	103	82	10,5	M12	5699	5796	1190	**646 998 50**	**646 999 50**

* When mounting from the bottom side choose the next smaller screw size.
** Dimension not in accordance with DIN ISO 13012-1.

Shaft steel page 478. Shaft blocks page 480.

Tandem Linear-Bearing Units KGT-1 ISO Series 1, with Two Linear Bearings

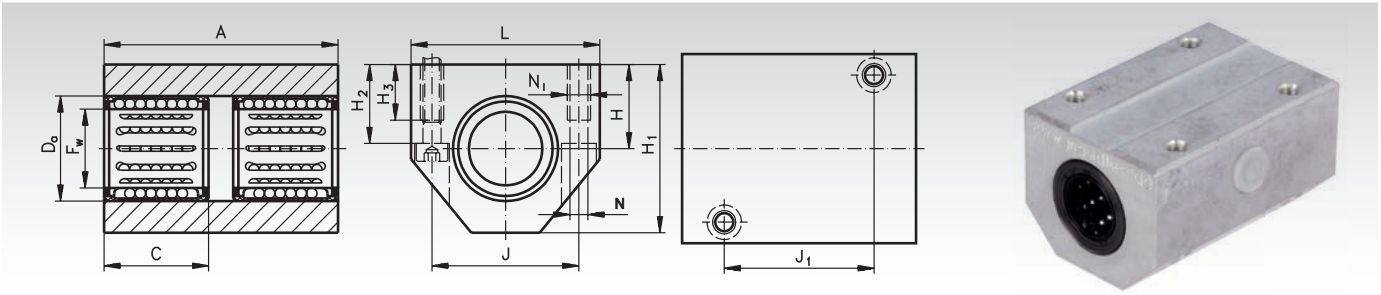

Material: Housing made from extruded aluminium with two compact linear bearings of the ISO Series 1 from premium brand in top quality. With integral double-lip seal.

All bearing are lubricated ready-to-install.

Recommended shaft tolerance h6.

Ordering Details: e.g.: Product No. 646 403 12, Linear Bearings Unit KGT-1, Internal Ø 12 mm

Product No.	F_W mm	A mm	C mm	D_a mm	$H^{\pm 0.02}$ mm	H_1 mm	H_2 mm	H_3 mm	J mm	J_1 mm	L mm	N mm	N_1* mm	Load Rating dyn. C N	Load Rating stat. C_0 N	Weight g	Spare Linear Bearing with Seal
646 403 12	12	60	28	19	17	33	16	11	29	35	40	4,3	M5	1140	1020	170	**646 112 12**
646 403 16	16	65	30	24	19	38	18	11	34	40	45	4,3	M5	1530	1270	220	**646 116 16**
646 403 20	20	65	30	28	23	45	22	13	40	45	53	5,3	M6	1900	1600	310	**646 120 20**
646 403 25	25	85	40	35	27	54	26	18	48	55	62	6,6	M8	3450	3150	540	**646 125 25**
646 403 30	30	105	50	40	30	60	29	18	53	70	67	6,6	M8	5200	5400	800	**646 130 30**
646 403 40	40	125	60	52	39	76	38	22	69	85	87	8,4	M10	9000	9000	1570	**646 140 40**
646 403 50	50	145	70	62	47	92	46	26	82	100	103	10,5	M12	11400	12700	2510	**646 150 50**

* When mounting from the bottom side choose the next smaller screw size.

Shaft steel page 478.
Shaft blocks page 480.

Quadro Linear-Bearing Units KGQ-1 ISO Series 1, with Four Linear Bearings

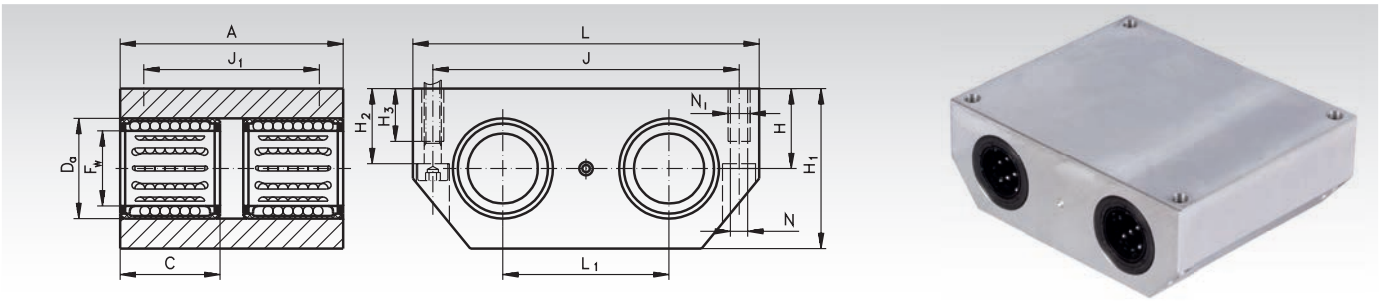

Material: Housing made from extruded aluminium with four compact linear bearings of the ISO Series 1 from premium brand in top quality. With integral double-lip seal.

All bearing are lubricated ready-to-install.

Recommended shaft tolerance h6.

Ordering Details: e.g.: Product No. 646 404 12, Linear Bearings Unit KGQ-1, Internal Ø 12 mm

Product No.	F_W mm	A mm	C mm	D_a mm	$H^{\pm 0.02}$ mm	H_1 mm	H_2 mm	H_3 mm	J mm	J_1 mm	L mm	L_1 mm	N mm	N_1* mm	Load Rating dyn. C N	Load Rating stat. C_0 N	Weight g	Spare Linear Bearing with Seal
646 404 12	12	70	28	19	15	30	14	11	69	59	80	40	4,3	M5	1860	2040	380	**646 112 12**
646 404 16	16	80	30	24	17,5	35	16,5	11	86	70	96	52	4,3	M5	2500	2550	570	**646 116 16**
646 404 20	20	85	30	28	20	40	19	13	103	73	115	63	5,3	M6	3100	3200	820	**646 120 20**
646 404 25	25	100	40	35	25	50	24	18	123	87	136	75	6,6	M8	5600	6300	1430	**646 125 25**
646 404 30	30	130	50	40	28	56	27	18	133	117	146	80	6,6	M8	8500	10800	2150	**646 130 30**
646 404 40	40	150	60	52	35	70	34	22	166	132	184	97	8,4	M10	14600	18000	3830	**646 140 40**
646 404 50	50	175	70	62	40	80	39	26	189	154	210	107	10,5	M12	18600	25500	5400	**646 150 50**

* When mounting from the bottom side choose the next smaller screw size.

Shaft steel page 478.
Shaft blocks page 480.

Precision Shaft Blocks GW ISO Series 3

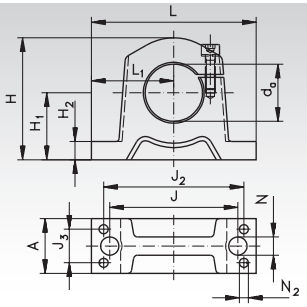



Material: Extruded aluminium.

Light Design, matching linear-bearing units of ISO Series 3.

Robust machine elements to attach the guiding shafts of the linear bearings. They allow true to size and cost efficient constructions.

Ordering Details: e.g.: Product No. 646 408 00, Precision Shaft Block GW, for Shaft-Ø 8 mm

Product No.	d_a mm	A mm	$H_1^{\pm 0.01}$ mm	H_2 mm	H mm	J mm	J_2 mm	J_3 mm	L mm	L_1 mm	N mm	N_2 mm	Weight g
646 408 00	8	10	15	5,5	25	25	35	5	45	22,5	4,3	2,7	12
646 412 00	12	12	20	6	32,5	32	42	6	52	26	5,3	3,2	23
646 416 00	16	15	20	7	35,5	40	46	7,5	56	28	5,3	4,3	34
646 420 00	20	20	25	8	43,5	45	58	10	70	35	5,3	5,3	65
646 425 00	25	28	30	10	53	60	68	16	80	40	6,4	6,4	140
646 430 00	30	30	35	10	63	68	76	18	88	44	8,4	6,4	200
646 440 00	40	36	45	12	81	86	94	22	108	54	10,5	8,4	470
646 450 00	50	49	50	14	92,5	108	116	30	135	67,5	10,5	10,5	680

Shaft steel page 478.

Precision Shaft Blocks GW-3 ISO Series 3

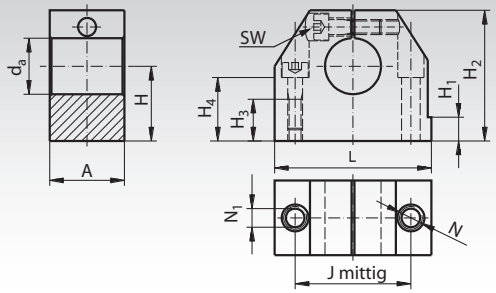



Material: Extruded aluminium.

Matching linear-bearing units of ISO Series 3.

Robust machine elements to attach the guiding shafts of the linear bearings. They allow true to size and cost efficient constructions.

Ordering Details: e.g.: Product No. 646 412 01, Precision Shaft Block GW-3, for Shaft-Ø 12 mm

Product No.	d_a mm	A mm	$H^{\pm 0.02}$ mm	H_1 mm	H_2 mm	H_3 mm	H_4 mm	$J^{\pm 0,12}$ mm	L mm	N_1 mm	N* mm	sw mm	Weight g
646 412 01	12	20	20	6	35	13	16,5	30	43	5,2	M6	3	60
646 416 01	16	24	25	7	42	18	21	38	53	6,8	M8	4	110
646 420 01	20	30	30	7,5	50	22	25	42	60	8,6	M10	5	170
646 425 01	25	38	35	8,5	61	26	30	56	78	10,3	M12	6	340
646 430 01	30	40	40	9,5	70	26	34	64	87	10,3	M12	6	460
646 440 01	40	48	50	11	90	34	44	82	108	14,25	M16	8	900
646 450 01	50	58	60	11	105	43	49	100	132	17,5	M20	10	1450

* When mounting from the bottom side choose the next smaller screw size.

Shaft steel page 478.

Precision Double Shaft Blocks GWD-3 ISO Series 3

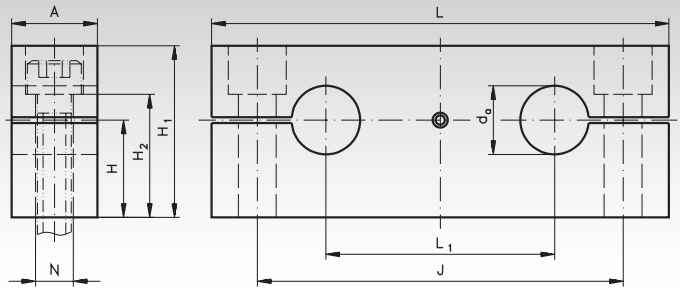



Material: Extruded aluminium.

Matching quadro linear-bearing units KGQ-3 of the ISO Series 3, page 500.

Robust machine elements to attach the guiding shafts of the linear bearings. They allow true to size and cost efficient constructions.

Ordering Details: e.g.: Product No. 646 412 02, Precision Shaft Block GWD-3 for Shaft-Ø 12 mm

Product No.	d_a mm	A mm	H±0,02 mm	H_1 mm	H_2 mm	J±0,02 mm	L mm	L_1 mm	N* mm	Weight g
646 412 02	12	14	18	32	23,5	70	85	42	6,6	90
646 416 02	16	18	20	37	26,5	82	100	54	9	140
646 420 02	20	20	25	46	32,5	108	130	72	11	250
646 425 02	25	25	30	56	40	132	160	88	13,5	470
646 430 02	30	25	35	64	48	150	180	96	13,5	620
646 440 02	40	30	44	80	59	190	230	122	17,5	1150
646 450 02	50	30	52	96	75	240	280	152	17,5	1700

* For cylindrical screws with Allen screw according to DIN 912 or ISO 4762.

Shaft steel page 478.



Collars

page 452





Retaining Rings

DIN 471 / DIN 472

page 514



Linear Bearings KB-3 ISO Series 3, Closed Design

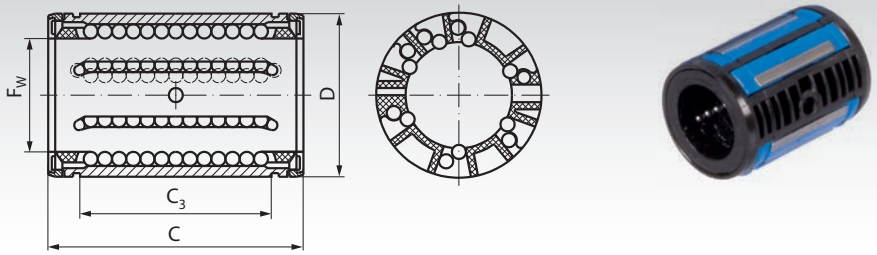



Linear bearings series 3 of ISO standard 10285 from premium brand in top quality.

High load-bearing capacity, due to the asymmetric position of the rows of balls and the specially shaped raceway segments. These linear bearings can be fitted inside a closed or open housing and are thus adjustable.

With shields or wiping double-lip seals.
Bearings with FW 5mm must be lubricated before use.
All other bearings are lubricated ready-to-install.

Recommended shaft tolerance h6, housing tolerance H6 or JS6.

Stainless version on request.

Ordering Details: e.g.: Product No. 646 005 00, Linear Bearing KB-3, Internal Ø 5 mm, with Shields

Product No. with Shields	Product No. with Seals	F_w mm	D mm	C mm	C_3 mm	Number of Rows of Balls	Load Rating dyn. C N	Load Rating stat. C_o N	Weight g	Product No. Retaining Ring DIN 471 Page 514	Weight g
646 005 00	**646 105 00**	5	12	22	12	4	280	210	5	**617 412 00**	0,5
646 008 00	**646 108 00**	8	16	25	14	4	490	355	9	**617 416 00**	0,8
646 012 00	**646 112 00**	12	22	32	20	6	1160	980	16	**617 422 00**	1,7
646 016 00	**646 116 00**	16	26	36	22	6	1500	1290	21	**617 426 00**	2,1
646 020 00	**646 120 00**	20	32	45	28	7	2240	2040	43	**617 432 00**	3,6
646 025 00	**646 125 00**	25	40	58	40	7	3350	3350	85	**617 440 00**	6,3
646 030 00	**646 130 00**	30	47	68	48	7	5600	5700	130	**617 447 00**	7,8
646 040 00	**646 140 00**	40	62	80	56	7	9000	8150	260	**617 462 00**	14,4
646 050 00	**646 150 00**	50	75	100	72	7	13400	12200	460	**617 475 00**	21,0

Shaft steel page 478. Shaft blocks page 487. Precision housings page 493.

Linear Bearings KB-3-0 ISO Series 3, Open Design

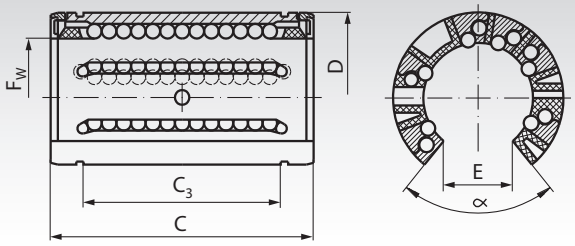



Linear bearings series 3 of ISO standard 10285 from premium brand in top quality.

High load-bearing capacity, due to the asymmetric position of the rows of balls and the specially shaped raceway segments.

With shields or wiping double-lip seals.
All bearings are lubricated ready-to-install.

Recommended shaft tolerance h6, housing tolerance H6 or JS6.

Stainless version on request.

Ordering Details: e.g.: Product No. 646 012 01, Linear Bearing KB-3-0, Internal Ø 12 mm, with Shields

Product No. with Shields	Product No. with Seals	F_w mm	D mm	C mm	C_3 mm	E mm	α Degrees	Load Rating in N dyn. C	Load Rating in N stat. C_0	Weight g
646 012 01	**646 112 01**	12	22	32	20	7,6	78	1160	980	13
646 016 01	**646 116 01**	16	26	36	22	10,4	78	1500	1290	17
646 020 01	**646 120 01**	20	32	45	28	10,8	60	2240	2040	36
646 025 01	**646 125 01**	25	40	58	40	13,2	60	3350	3350	71
646 030 01	**646 130 01**	30	47	68	48	14,2	50	5600	5700	114
646 040 01	**646 140 01**	40	62	80	56	18,7	50	9000	8150	230
646 050 01	**646 150 01**	50	75	100	72	23,6	50	13400	12200	390

Shaft steel with shaft support page 479. Precision housings page 493.

Linear Bearings KB-3-A ISO Series 3, Self-Aligning, Closed Design

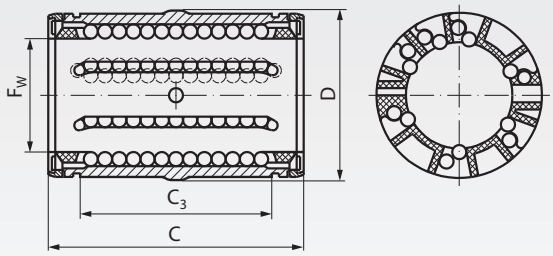



Self-aligning linear bearings series 3 of ISO standard 10285 from premium brand in top quality.

High load-bearing capacity, due to the asymmetric position of the rows of balls and the specially shaped raceway segments. These linear bearings can be fitted inside a closed or slotted housing and are thus adjustable.

With wiping double-lip seals.

These bearings are self-aligning up to +/- 0,5°.
All bearings are lubricated ready-to-install.

Recommended shaft tolerance h6, housing tolerance H6 or JS6.

Stainless version on request.

Ordering Details: e.g.: Product No. 646 112 06, Linear Bearing KB-3-A, Internal Ø 12 mm

Product No. with Seals	F_w mm	D mm	$C^{-0,02}$ mm	$C_3^{-0,02}$ mm	Load rating dyn. C N	Load rating stat. C_o N	Weight g	Product No. Retaining Ring DIN 471 Page 514	Weight g
646 112 06	12	22	32	20,3	1080	815	15	**617 422 00**	1,7
646 116 06	16	26	36	22,3	1320	865	20	**617 426 00**	2,1
646 120 06	20	32	45	28,3	2000	1370	42	**617 432 00**	3,6
646 125 06	25	40	58	40,4	2900	2040	83	**617 440 00**	6,3
646 130 06	30	47	68	48,4	4650	3250	130	**617 447 00**	7,8
646 140 06	40	62	80	56,3	7800	5200	260	**617 462 00**	14,4
646 150 06	50	75	100	72,3	11200	6950	440	**617 475 00**	21,0

Shaft steel page 478. Shaft blocks page 487.
Precision housings page 493.

Linear Bearings KB-3-A-0 ISO Series 3, Self-Aligning, Open Design

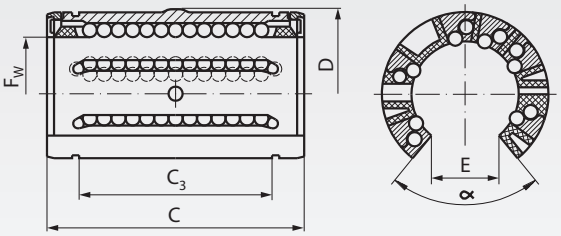



Self-aligning linear bearings series 3 of ISO standard 10285 from premium brand in top quality.

High load-bearing capacity, due to the asymmetric position of the rows of balls and the specially shaped raceway segments.

With wiping double-lip seals.

These bearings are self-aligning up to +/- 0,5°.
All bearings are lubricated ready-to-install.

Recommended shaft tolerance h6, housing tolerance H6 or JS6.

Stainless version on request.

Ordering Details: e.g.: Product No. 646 112 07, Linear Bearing KB-3-A-0, Internal Ø 12 mm

Product No. with Seals	F_w mm	D mm	$C^{-0,02}$ mm	$C_3^{-0,02}$ mm	E mm	α °	Load rating dyn. C N	Load rating stat. C_0 N	Weight g
646 112 07	12	22	32	20,3	7,6	78	1080	815	12
646 116 07	16	26	36	22,3	10,4	78	1320	865	16
646 120 07	20	32	45	28,3	10,8	60	2000	1370	35
646 125 07	25	40	58	40,4	13,2	60	2900	2040	70
646 130 07	30	47	68	48,4	14,2	50	4650	3250	110
646 140 07	40	62	80	56,3	18,7	50	7800	5200	220
646 150 07	50	75	100	72,3	23,6	50	11200	6950	370

Shaft steel with shaft support page 479.
Precision housings page 493.

Linear Bearings KB-3 ISO Series 3, Economy-Line, Closed Design

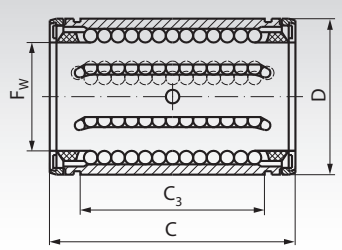

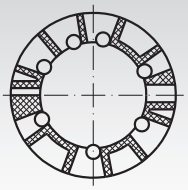



Linear bearings from reliable brand in good quality at low price.

These linear bearings can be fitted inside a customer´s housing or as spare parts for our closed Economy-Line units.

With wiping double-lip seals.

These bearings are self-aligning up to +/- 0,5°.

All bearings must be lubricated before use.
Recommended shaft tolerance h6, housing tolerance H6 or JS6.

Ordering Details: e.g.: Product No. 646 112 02, Linear Bearing KB-3, Economy-Line, Internal Ø 12 mm

Product No. with Seals	F_w mm	D mm	$C^{-0,02}$ mm	$C_3^{-0,02}$ mm	Load rating dyn. C N	Load rating stat. C_o N	Weight g	Product No. Retaining Ring DIN 471 Page 514	Weight g
646 112 02	12	22	32	20,3	1020	1290	16	**617 422 00**	1,7
646 116 02	16	26	36	22,3	1250	1550	21	**617 426 00**	2,1
646 120 02	20	32	45	28,3	2090	2630	43	**617 432 00**	3,6
646 125 02	25	40	58	40,4	3780	4720	85	**617 440 00**	6,3
646 130 02	30	47	68	48,4	5470	6810	130	**617 447 00**	7,8
646 140 02	40	62	80	56,3	6590	8230	260	**617 462 00**	14,4
646 150 02	50	75	100	72,3	10800	13500	460	**617 475 00**	21,0

Shaft steel page 478. Shaft blocks page 487.
Precision housings page 493.

Linear Bearings KB-3-0 ISO Series 3, Economy-Line, Open Design

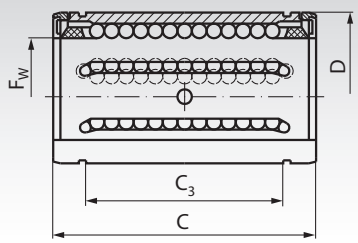

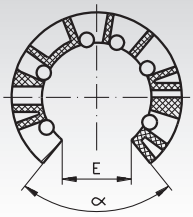



Linear bearings from reliable brand in good quality at low price.

These linear bearings can be fitted inside a customer´s housing or as spare parts for our open Economy-Line units.

With wiping double-lip seals.

These bearings are self-aligning up to +/- 0,5°.

All bearings must be lubricated before use.
Recommended shaft tolerance h6, housing tolerance H6 or JS6.

Ordering Details: e.g.: Product No. 646 112 03, Linear Bearing KB-3, Economy-Line, Open Design, Internal Ø 12 mm

Product No. with Seals	F_w mm	D mm	$C^{-0,02}$ mm	$C_3^{-0,02}$ mm	E mm	α °	Load rating dyn. C N	Load rating stat. C_0 N	Weight g
646 112 03	12	22	32	20,3	6,5	66	1020	1290	13
646 116 03	16	26	36	22,3	9,0	68	1250	1550	17
646 120 03	20	32	45	28,3	9,0	55	2090	2630	36
646 125 03	25	40	58	40,4	11,5	57	3780	4720	71
646 130 03	30	47	68	48,4	14,0	57	5470	6810	114
646 140 03	40	62	80	56,3	19,5	56	6590	8230	230
646 150 03	50	75	100	72,3	22,5	54	10800	13500	390

Shaft steel with shaft support page 479.
Precision housings page 493.

Linear Slide Bearings PO-3 Made from Plastic, ISO Series 3, Closed Design

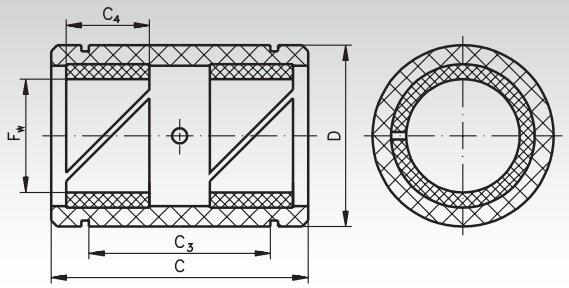



External dimensions like ISO Series 3 from premium brand in top quality. The sliding material is polyacetal with a specific polyethylene. The linear slide bearings should be specifically chosen if, due to unusual operating conditions, linear bearings cannot be used.

Linear slide bearings feature the same mounting and securing options as the linear bearings of the ISO Series 3 and can be fitted in the same housings.

Tolerances: Mounting hole H6, shaft h6.

Temperature range: -40°C to +80°C.

Ordering Details: e.g.: Product No. 646 205 00, Linear Slide Bearings PO-3, Internal Ø 5 mm

Product No. Closed	F_w mm	D mm	C mm	C_3 mm	C_4 mm	Load Rating dyn. C at 0.1m/s N	Load Rating dyn. C at 4m/s N	Load Rating static C_0 N	Weight g	Product No. Retaining Ring DIN 471 Page 514	Weight g
646 205 00	5	12	22	12	7	280	7	980	3	**617 412 00**	0,5
646 208 00	8	16	25	14	8	510	13	1800	5	**617 416 00**	0,8
646 212 00	12	22	32	20	10	965	24	3350	12	**617 422 00**	1,7
646 216 00	16	26	36	22	12	1530	38	5400	16	**617 426 00**	2,1
646 220 00	20	32	45	28	15	2400	60	8300	30	**617 432 00**	3,6
646 225 00	25	40	58	40	20	4000	100	14000	60	**617 440 00**	6,3
646 230 00	30	47	68	48	23	5500	137	19300	90	**617 447 00**	7,8
646 240 00	40	62	80	56	25	8000	200	28000	200	**617 462 00**	14,4
646 250 00	50	75	100	72	30	12000	300	41500	340	**617 475 00**	21,0

Shaft steel page 478. Shaft blocks page 487.
Precision housings page 493.

Linear Slide Bearings PO-3-0 Made from Plastic, ISO Series 3, Open Design

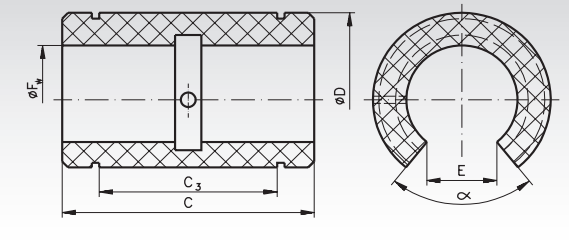



External dimensions like ISO Series 3 from premium brand in top quality. The sliding material is polyacetal with a specific polyethylene. The linear slide bearings should be specifically chosen if, due to unusual operating conditions, linear bearings cannot be used.

Linear slide bearings feature the same mounting and securing options as the linear bearings of the ISO Series 3 and can be fitted in the same housings.

Tolerances: Mounting hole H6, shaft h6.

Temperature range: -40°C to +80°C.

Ordering Details: e.g.: Product No. 646 212 01, Linear Slide Bearings PO-3-0, Internal Ø 12 mm

Product No. Open	F_w mm	D mm	C mm	C_3 mm	E mm	α Degrees	Load Rating dyn. C at 0.1m/s N	Load Rating dyn. C at 4m/s N	Load Rating static C_0 N	Weight g
646 212 01	12	22	32	20	7,6	78	965	24	3350	8
646 216 01	16	26	36	22	10,4	78	1530	38	5400	12
646 220 01	20	32	45	28	10,8	60	2400	60	8300	23
646 225 01	25	40	58	40	13,2	60	4000	100	14000	45
646 230 01	30	47	68	48	14,2	50	5500	137	19300	70
646 240 01	40	62	80	56	18,7	50	8000	200	28000	150
646 250 01	50	75	100	72	23,6	50	12000	300	41500	260

Shaft steel with shaft support page 479.
Precision housings page 493.

Precision Housings KG for Linear Bearings of Closed Design, ISO Series 3

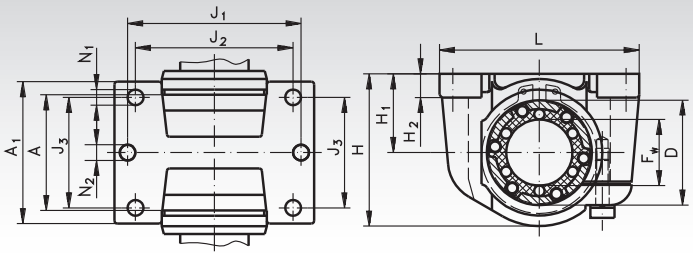





Linear bearing (spherical bearing or sliding bush) and retaining rings have to be ordered separately.

Material: Aluminium die-cast.

Light housing for linear bearings of closed design, ISO Series 3 (linear bearing has to be ordered separately).

The housings can be mounted standing, upside-down or horizontally. The bearing is secured in the housing against axial and radial movement with a grease nipple.
At the slotted housing, the desired radial clearance can be set with an adjusting screw during the mounting.

Ordering Details: e.g.: Product No. 646 508 00, Precision Housing KG, D = 16 mm, Closed

Product No. Closed	Product No. Slotted	F_w	D	A	A_1	H	$H_1^{\pm 0,01}$	H_2	J_1	J_2	J_3	L	N_1	N_2	Weight	Product No. Matching Spherical Bearing or Slide Bearing	Product No. Retaining Ring DIN 471	Weight
		Dimensions in mm													g	Spher. Bear. / Spher. Bear. / Slide Bear.	Page 514	g
646 508 00	**646 608 00**	8	16	14	27	28	15	5,5	35	25	20	45	3,2	5,3	18	**646 008 00/ 646 108 00/ 646 208 00**	**617 416 00**	0,8
646 512 00	**646 612 00**	12	22	20	31	34,5	18	6	42	32	23	52	4,3	5,3	38	**646 012 00/ 646 112 00/ 646 212 00**	**617 422 00**	1,7
646 516 00	**646 616 00**	16	26	22	34,5	40,5	22	7	46	40	26	56	4,3	5,3	54	**646 016 00/ 646 116 00/ 646 216 00**	**617 426 00**	2,1
646 520 00	**646 620 00**	20	32	28	41	48	25	8	58	45	32	70	4,3	6,4	100	**646 020 00/ 646 120 00/ 646 220 00**	**617 432 00**	3,6
646 525 00	**646 625 00**	25	40	40	52	58	30	10	68	60	40	80	5,3	6,4	200	**646 025 00/ 646 125 00/ 646 225 00**	**617 440 00**	6,3
646 530 00	**646 630 00**	30	47	48	59	67	35	10	76	68	45	88	6,4	6,4	300	**646 030 00/ 646 130 00/ 646 230 00**	**617 447 00**	7,8
646 540 00	**646 640 00**	40	62	56	74	85	45	12	94	86	58	108	8,4	8,4	460	**646 040 00/ 646 140 00/ 646 240 00**	**617 462 00**	14,4
646 550 00	**646 650 00**	50	75	72	66	99	50	14	116	108	50	135	8,4	10,5	750	**646 050 00/ 646 150 00/ 646 250 00**	**617 475 00**	21,0

Shaft steel page 478. Shaft blocks page 487.

Precision Housings KG-0 for Linear Bearings of Open Design, ISO Series 3

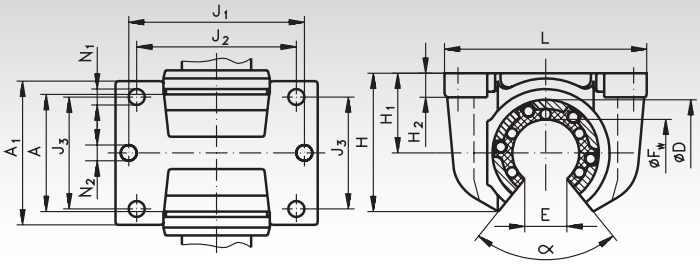

Linear bearing (spherical bearing or sliding bush) have to be ordered separately.



Material: Aluminium die-cast.

Light housing for linear bearings of open design, ISO Series 3 (linear bearing has to be ordered separately).

The housings can be mounted standing, upside-down or horizontally. The bearing is secured in the housing against axial and radial movement with a grease nipple.

Ordering Details: e.g.: Product No. 646 512 01, Precision Housing KG-O, D = 22 mm, Open

Product-No. Open	F_w mm	D mm	A mm	A_1 mm	$H^{\pm 0,01}$ mm	H_1 mm	H_2 mm	J_1 mm	J_2 mm	J_3 mm	L mm	N_1 mm	N_2 mm	E mm	α Grad	Weight g	Product-No. Matching Bearing Spher. Bear./	Spher. Bear. / Slide Bea.	
646 512 01	12	22	20	31	28	18	6	42	32	23	52	4,3	5,3	7,6	78	33	**646 012 01**	**646 112 01**	**646 212 01**
646 516 01	16	26	22	34,5	35	22	7	46	40	26	56	4,3	5,3	10,4	78	44	**646 016 01**	**646 116 01**	**646 216 01**
646 520 01	20	32	28	41	42	25	8	58	45	32	70	4,3	6,4	10,8	60	88	**646 020 01**	**646 120 01**	**646 220 01**
646 525 01	25	40	40	52	51	30	10	68	60	40	80	5,3	6,4	13,2	60	180	**646 025 01**	**646 125 01**	**646 225 01**
646 530 01	30	47	48	59	60	35	10	76	68	45	88	6,4	6,4	14,2	50	260	**646 030 01**	**646 130 01**	**646 230 01**
646 540 01	40	62	56	74	77	45	12	94	86	58	108	8,4	8,4	18,7	50	400	**646 040 01**	**646 140 01**	**646 240 01**
646 550 01	50	75	72	66	88	50	14	116	108	50	135	8,4	10,5	23,6	50	650	**646 050 01**	**646 150 01**	**646 250 01**

Shaft steel with shaft support page 479.

Linear Bearings Units KG-3-K ISO Series 3, Short Version, with Linear Bearing of Closed Design

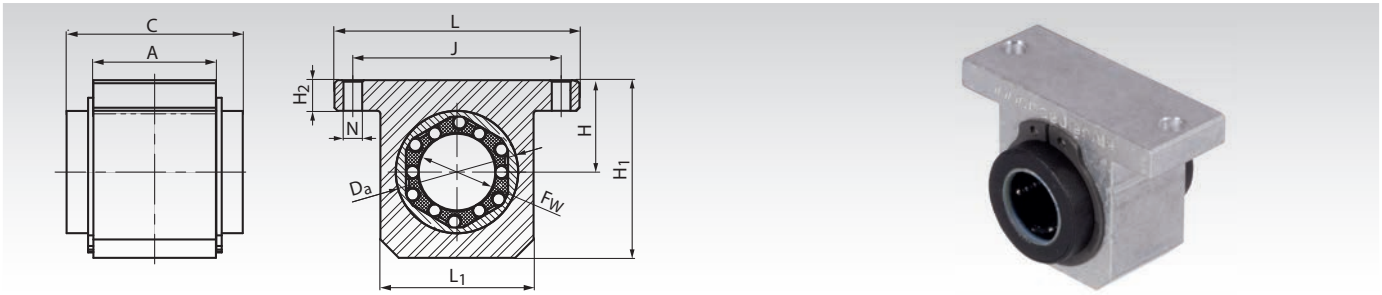

Material: Housing made from extruded aluminium with a closed linear bearing of the ISO Series 3 from reliable brand in good quality. Self-aligning capability that accommodates tilting.

All bearings are lubricated ready-to-install. Recommended shaft tolerance h6.

Spare linear bearing page 491.

Ordering Details: e.g.: Product No. 646 712 04, Linear Bearings Unit KG-3-K, Short Version, Internal Ø 12 mm

Product No. Closed	F_w mm	A mm	C mm	D_a mm	$H^{\pm 0,015}$ mm	H_1 mm	H_2 mm	J mm	L mm	L_1 mm	N mm	Load Rating dyn. C N	Load Rating stat. C_0 N	Weight g
646 712 04	12	20	32	22	18	35	6	42	52	30	5,3	1020	1290	90
646 716 04	16	22	36	26	22	40,5	7	46	56	34	5,3	1250	1550	120
646 720 04	20	28	45	32	25	48	8	58	70	40	6,4	2090	2630	250
646 725 04	25	40	58	40	30	58	10	68	80	50	6,4	3780	4720	490
646 730 04	30	48	68	47	35	67	10	76	88	58	6,4	5470	6810	780
646 740 04	40	56	80	62	45	85	12	94	108	74	8,4	6590	8230	1280
646 750 04	50	72	100	75	50	100	12	116	135	96	10,5	10800	13500	1700

Shaft steel page 478. Shaft blocks page 487.

Linear Bearings Units KG-3-KO ISO Series 3, Short Version, with Linear Bearing of Open Design

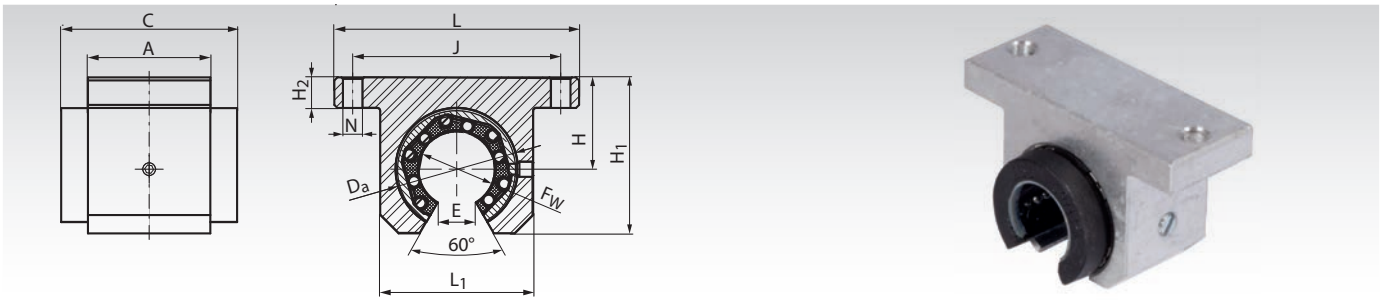

Material: Housing made from extruded aluminium with an open linear bearing of the ISO Series 3 from reliable brand in good quality. Self-aligning capability that accommodates tilting.

All bearings are lubricated ready-to-install. Recommended shaft tolerance h6.

Spare linear bearing page 491.

Ordering Details: e.g.: Product No. 646 712 05, Linear Bearings Unit KG-3-KO, Short Version, Internal Ø 12 mm

Product No. Open	F_w mm	A mm	C mm	D_a mm	$H^{\pm 0,015}$ mm	H_1 mm	H_2 mm	J mm	L mm	L_1 mm	E mm	N mm	Load Rating dyn. C N	Load Rating stat. C_0 N	Weight g
646 712 05	12	20	32	22	18	28	6	42	52	30	7,5	5,3	1020	1290	90
646 716 05	16	22	36	26	22	33,5	7	46	56	34	10	5,3	1250	1550	120
646 720 05	20	28	45	32	25	42	8	58	70	40	10	6,4	2090	2630	250
646 725 05	25	40	58	40	30	51	10	68	80	50	12,5	6,4	3780	4720	490
646 730 05	30	48	68	47	35	60	10	76	88	58	12,5	6,4	5470	6810	780
646 740 05	40	56	80	62	45	77	12	94	108	74	16,8	8,4	6590	8230	1280
646 750 05	50	72	100	75	50	93	12	116	135	96	21	10,5	10800	13500	1700

Shaft steel with shaft support page 479.

Linear Bearings Units KG-3-F ISO Series 3, Flange Version, with Linear Bearing of Closed Design

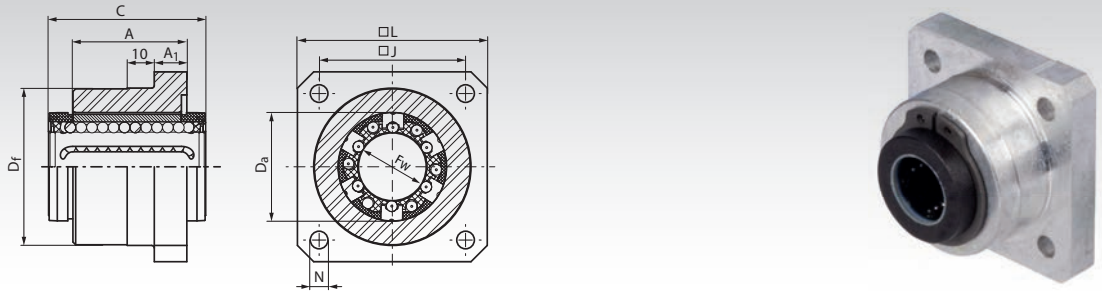

Material: Housing made from extruded aluminium with a closed linear bearing of the ISO Series 3 from reliable brand in good quality. Self-aligning capability that accommodates tilting.

All bearings are lubricated ready-to-install. Recommended shaft tolerance h6.

Spare linear bearing page 491.

Ordering Details: e.g.: Product No. 646 712 06, Linear Bearings Unit KG-3-F, Flange Version, Internal Ø 12 mm

Product No.	F_w mm	A mm	A_1 mm	C mm	D_a mm	D_f g7 mm	J mm	L mm	N mm	Load Rating dyn. C N	Load Rating stat. C_0 N	Weight g
646 712 06	12	22	6	32	22	32	30	40	5,5	1020	1290	90
646 716 06	16	24	8	36	26	38	35	50	5,5	1250	1550	120
646 720 06	20	30	10	45	32	46	42	60	6,6	2090	2630	250
646 725 06	25	42	12	58	40	58	54	70	6,6	3780	4720	490
646 730 06	30	50	14	68	47	66	60	80	9	5470	6810	780
646 740 06	40	59	16	80	62	90	78	100	11	6590	8230	1280

Shaft steel page 478. Shaft blocks page 487.

Linear Bearings Units KG-3 ISO Series 3, with Linear Bearing of Closed Design

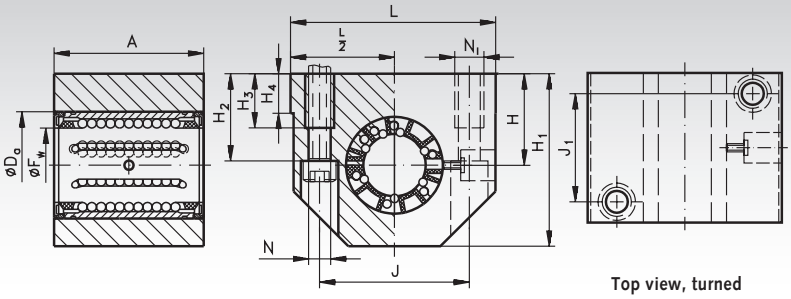

Top view, turned



Material: Housing made from extruded aluminium with a closed linear bearing of the ISO Series 3 from premium brand in top quality. With self-aligning capability that accommodates tilting.

All bearings are lubricated ready-to-install.
Recommended shaft tolerance h6.
Spare linear bearing page 490.

Ordering Details: e.g.: Product No. 646 712 00, Linear Bearings Unit KG-3, Internal Ø 12 mm

Product No. Closed	F_w mm	A mm	D_a mm	$H^{\pm 0.02}$ mm	H_1 mm	H_2 mm	H_3 mm	H_4 mm	J mm	J_1 mm	L mm	N mm	N_l* mm	Load Rating dyn. C N	Load Rating stat. C_0 N	Weight g
646 712 00	12	32	22	18	35	16,5	11	6	32	23	43	4,3	M5	1080	815	93
646 716 00	16	37	26	22	42	21	13	7	40	26	53	5,3	M6	1320	865	161
646 720 00	20	45	32	25	50	24	18	7,5	45	32	60	6,6	M8	2000	1370	225
646 725 00	25	58	40	30	61	29	22	8,5	60	40	78	8,4	M10	2900	2040	533
646 730 00	30	68	47	35	70	34	22	9,5	68	45	87	8,4	M10	4650	3250	790
646 740 00	40	80	62	45	90	44	26	11	86	58	108	10,5	M12	7800	5200	1440
646 750 00	50	100	75	50	105	49	35	11	108	50	132	13,5	M16	11200	6950	2470

* When mounting from the bottom side choose the next smaller screw size.

Shaft steel page 478. Shaft blocks page 487.

Linear Bearings Units KG-3-O ISO Series 3, with Linear Bearing of Open Design

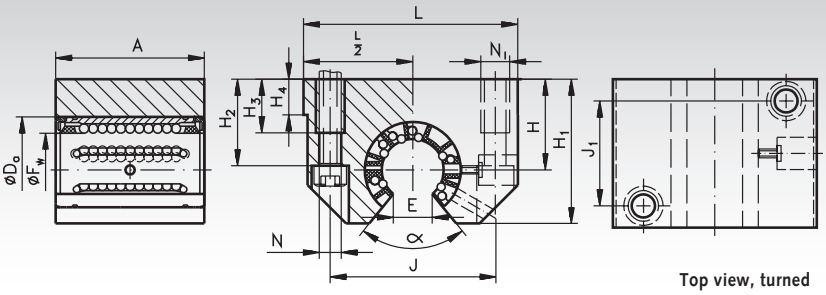

Top view, turned



Material: Housing made from extruded aluminium with an open linear bearing of the ISO Series 3 from premium brand in top quality. With self-aligning capability that accommodates tilting, adjustable clearance and double-lip seals.

All bearings are lubricated ready-to-install.
Recommended shaft tolerance h6.
Spare linear bearing page 490.

Ordering Details: e.g.: Product No. 646 712 01, Linear Bearings Unit KG-3-O, Internal Ø 12 mm

Product No. Open	F_w mm	A mm	D_a mm	$H^{\pm 0.02}$ mm	H_1 mm	H_2 mm	H_3 mm	H_4 mm	J mm	J_1 mm	L mm	N mm	N_l* mm	E mm	α Degrees	Load Rating dyn. C N	Load Rating stat. C_0 N	Weight g
646 712 01	12	32	22	18	28	16,5	11	6	32	23	43	4,3	M5	7,6	78	1080	815	74
646 716 01	16	37	26	22	35	21	13	7	40	26	53	5,3	M6	10,4	78	1320	865	132
646 720 01	20	45	32	25	42	24	18	7,5	45	32	60	6,6	M8	10,8	60	2000	1370	215
646 725 01	25	58	40	30	51	29	22	8,5	60	40	78	8,4	M10	13,2	60	2900	2040	443
646 730 01	30	68	47	35	60	34	22	9,5	68	45	87	8,4	M10	14,2	50	4650	3250	670
646 740 01	40	80	62	45	77	44	26	11	86	58	108	10,5	M12	18,7	50	7800	5200	1210
646 750 01	50	100	75	50	88	49	35	11	108	50	132	13,5	M16	23,6	50	11200	6950	2020

* When mounting from the bottom side choose the next smaller screw size.

Shaft steel with shaft support page 479.

Linear Bearings Units KG-3 ISO Series 3, Economy-Line, with Linear Bearing of Closed Design

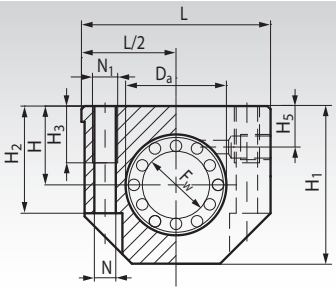

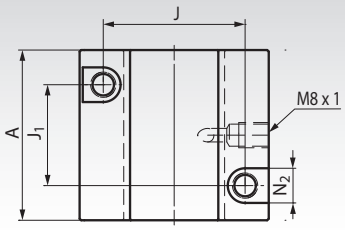

Bottom view



Material: Housing made from extruded aluminium with a closed linear bearing of the ISO Series 3 from reliable brand in good quality at low price. Self-aligning capability that accommodates tilting.

All bearings are lubricated ready-to-install.
Recommended shaft tolerance h6.
Spare linear bearing page 491.

Ordering Details: e.g.: Product No. 646 712 02, Linear Bearings Unit KG-3, Economy-Line, Internal Ø 12 mm

Product No. closed	F_w mm	A mm	D_a mm	$H^{\pm 0,02}$ mm	H_1 mm	H_2 mm	H_3 mm	H_5 mm	J mm	J_1 mm	L mm	N mm	N_1* mm	N_2 mm	Load Rating dyn. C N	Load Rating stat. C_0 N	Weight g
646 712 02	12	39	22	18	35	25	13	10	32	23	43	4,2	M5	8	1020	1290	130
646 716 02	16	43	26	22	42	30	13	12	40	26	53	5,2	M6	10	1250	1550	200
646 720 02	20	54	32	25	50	34	18	13	45	32	60	6,8	M8	11	2090	2630	330
646 725 02	25	67	40	30	60	40	22	15	60	40	78	8,6	M10	15	3780	4720	670
646 730 02	30	79	47	35	70	48	22	16	68	45	87	8,6	M10	15	5470	6810	1010
646 740 02	40	91	62	45	90	60	26	20	86	58	108	10,3	M12	18	6590	8230	1810
646 750 02	50	113	75	50	105	49	34	20	108	50	132	14,25	M16	20	10800	13500	2930

* When mounting from the bottom side choose the next smaller screw size.

Shaft steel page 478. Shaft blocks page 487.

Linear Bearings Units KG-3-O ISO Series 3, Economy-Line, with Linear Bearing of Open Design

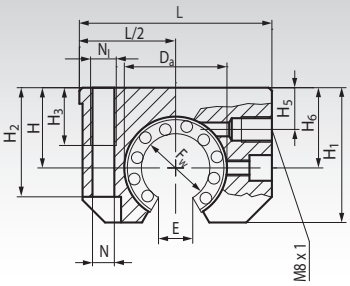

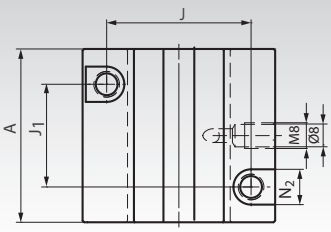

Bottom view



Material: Housing made from extruded aluminium with an open linear bearing of the ISO Series 3 from reliable brand in good quality at low price. Self-aligning capability that accommodates tilting.

All bearings are lubricated ready-to-install.
Recommended shaft tolerance h6.
Spare linear bearing page 491.

Ordering Details: e.g.: Product No. 646 712 03, Linear Bearings Unit KG-3-O, Economy-Line, Internal Ø 12 mm

Product No. open	F_w mm	A mm	D_a mm	$H^{\pm 0,02}$ mm	H_1 mm	H_2 mm	H_3 mm	H_5 mm	H_6 mm	J mm	J_1 mm	L mm	N mm	N_1* mm	N_2 mm	E mm	Load Rating dyn. C N	Load Rating stat. C_0 N	Weight g
646 712 03	12	39	22	18	28	23,5	11	8	16,7	32	23	43	4,2	M5	8	6,5	1020	1290	100
646 716 03	16	43	26	22	35	30	13	12	22,0	40	26	53	5,2	M6	10	9,0	1250	1550	170
646 720 03	20	54	32	25	42	34	18	13	25,0	45	32	60	6,8	M8	11	9,0	2090	2630	280
646 725 03	25	67	40	30	51	40	22	15	31,5	60	40	78	8,6	M10	15	11,5	3780	4720	570
646 730 03	30	79	47	35	60	48	22	16	33,0	68	45	87	8,6	M10	15	14,0	5470	6810	870
646 740 03	40	91	62	45	77	60	26	20	45,5	86	58	108	10,3	M12	28	19,5	6590	8230	1560
646 750 03	50	113	75	50	88	49	34	20	47,5	108	50	132	14,25	M16	20	22,5	10800	13500	2480

* When mounting from the bottom side choose the next smaller screw size.

Shaft steel with shaft support page 479.

Tandem Linear-Bearing Units KGT-3 ISO Series 3, with Linear Bearings of Closed Design

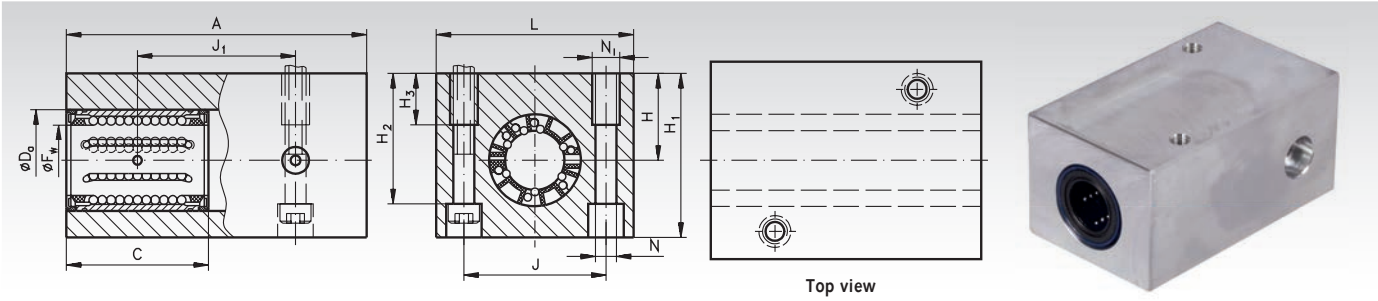

Material: Housing made from extruded aluminium with two closed linear bearings of the ISO Series 3 from premium brand in top quality. With self-aligning capability that accommodates tilting and double-lip seals.

All bearings are lubricated ready-to-install.
Recommended shaft tolerance h6.
Spare linear bearing page 490.

Ordering Details: e.g.: Product No. 646 812 00, Linear Bearings Unit KGT-3, Internal Ø 12 mm

Product No. Closed	F_w mm	A mm	C mm	D_a mm	$H^{\pm 0.01}$ mm	H_1 mm	H_2 mm	H_3 mm	J mm	J_1 mm	L mm	N mm	N_l* mm	Load Rating dyn. C N	Load Rating stat. C_0 N	Weight g
646 812 00	12	76	32	22	18	35	27	13	30	40	42	5,3	M6	1760	1630	236
646 816 00	16	84	36	26	22	41,5	33	13	36	45	50	5,3	M6	2160	1730	372
646 820 00	20	104	45	32	25	49,5	39,5	18	45	55	60	6,4	M8	3200	2750	670
646 825 00	25	130	58	40	30	59,5	47	22	54	70	74	8,4	M10	4750	4150	1236
646 830 00	30	152	68	47	35	69,5	55	26	62	85	84	10,5	M12	7500	6550	1870
646 840 00	40	176	80	62	45	89,5	71	34	80	100	108	13	M16	12700	10400	3550
646 850 00	50	224	100	75	50	99,5	81	34	100	125	130	13	M16	18300	14000	5920

* When mounting from the bottom side choose the next smaller screw size.

Shaft steel page 478. Shaft blocks page 487.

Tandem Linear-Bearing Units KGT-3-0 ISO Series 3, with Linear Bearings of Open Design

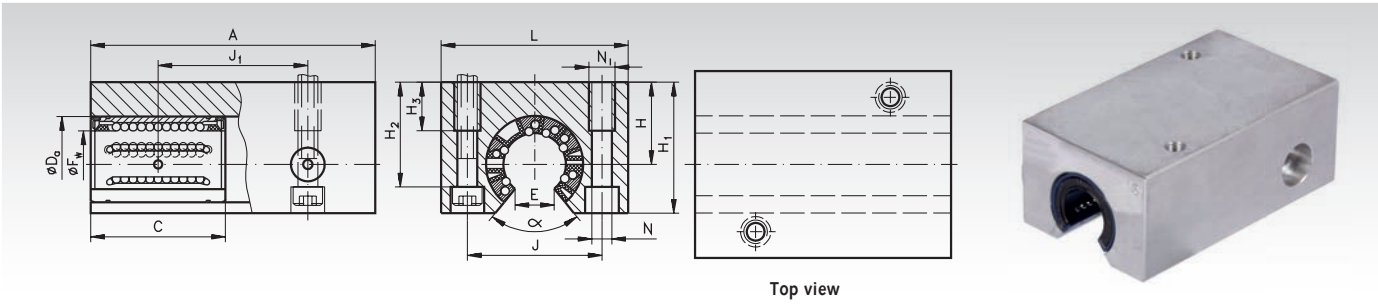

Material: Housing made from extruded aluminium with two open linear bearings of the ISO Series 3 from premium brand in top quality. With self-aligning capability that accommodates tilting and double-lip seals.

All bearings are lubricated ready-to-install.
Recommended shaft tolerance h6.
Spare linear bearing page 490.

Ordering Details: e.g.: Product No. 646 812 01, Linear Bearings Unit KGT-3-0, Internal Ø 12 mm

Product No. Open	F_w mm	A mm	C mm	D_a mm	$H^{\pm 0.02}$ mm	H_1 mm	H_2 mm	H_3 mm	J mm	J_1 mm	L mm	N mm	N_l* mm	E mm	α Degrees	Load Rating dyn. C N	Load Rating stat. C_0 N	Weight g
646 812 01	12	76	32	22	18	29	23,5	13	30	40	42	5,3	M6	7,6	78	1760	1630	178
646 816 01	16	84	36	26	22	35	28	13	36	45	50	5,3	M6	10,4	78	2160	1730	284
646 820 01	20	104	45	32	25	42	33,5	18	45	55	60	6,4	M8	10,8	60	3200	2750	620
646 825 01	25	130	58	40	30	51	40	22	54	70	74	8,4	M10	13,2	60	4750	4150	966
646 830 01	30	152	68	47	35	60	46,5	26	62	85	84	10,5	M12	14,2	50	7500	6550	1490
646 840 01	40	176	80	62	45	77	61	34	80	100	108	13	M16	18,7	50	12700	10400	2810
646 850 01	50	224	100	75	50	88	72	34	100	125	130	13	M16	23,6	50	18300	14000	4830

* When mounting from the bottom side choose the next smaller screw size.

Shaft steel with shaft support page 479.

Tandem Linear-Bearing Units KGT-3 ISO Series 3, Economy-Line, with Linear Bearings of Closed Design

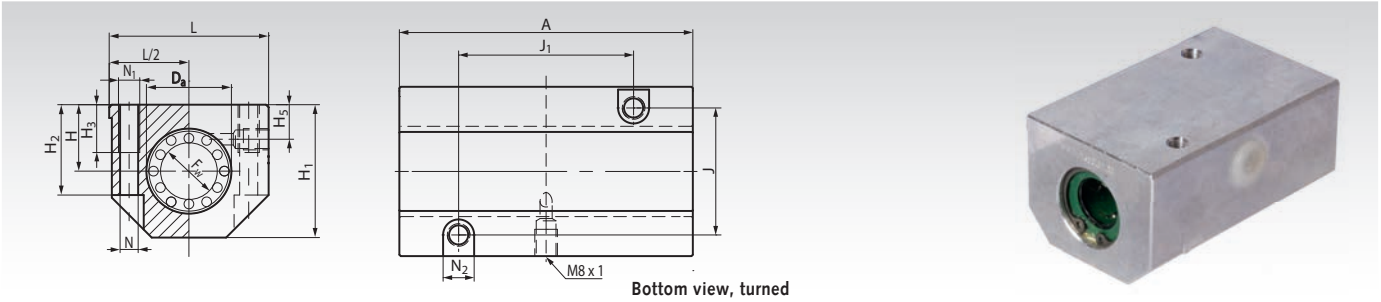

Bottom view, turned

Material: Housing made from extruded aluminium with two closed linear bearings of the ISO Series 3 from reliable brand in good quality at low price. Self-aligning capability that accommodates tilting.

All bearings are lubricated ready-to-install.
Recommended shaft tolerance h6.
Spare linear bearing page 491.

Ordering Details: e.g.: Product No. 646 812 02, Linear Bearings Unit KGT-3, Economy-Line, Internal Ø 12 mm

Product No. closed	F_w mm	A mm	D_a mm	$H^{\pm 0.02}$ mm	H_1 mm	H_2 mm	H_3 mm	J mm	J_1 mm	L mm	N mm	N_l* mm	N_2 mm	Load Rating dyn. C N	Load Rating stat. C_0 N	Weight g
646 812 02	12	76	22	18	35	25	13	30	40	43	5,2	M6	10	1660	2580	250
646 816 02	16	84	26	22	42	30	13	36	45	53	5,2	M6	10	2030	3100	410
646 820 02	20	104	32	25	50	34	18	45	55	60	6,8	M8	11	3400	5260	640
646 825 02	25	130	40	30	60	40	22	54	70	78	8,6	M10	15	6160	9440	1290
646 830 02	30	152	47	35	70	48	26	62	85	87	10,3	M12	18	8610	13620	1970
646 840 02	40	176	62	45	90	60	34	80	100	108	14,25	M16	20	10740	16460	3520
646 850 02	50	224	75	50	105	49	34	100	125	132	14,25	M16	20	17600	27000	5860

* When mounting from the bottom side choose the next smaller screw size.

Shaft steel page 478. Shaft blocks page 487.

Tandem Linear-Bearing Units KGT-3-0 ISO Series 3, Economy-Line, with Linear Bearings of Open Design

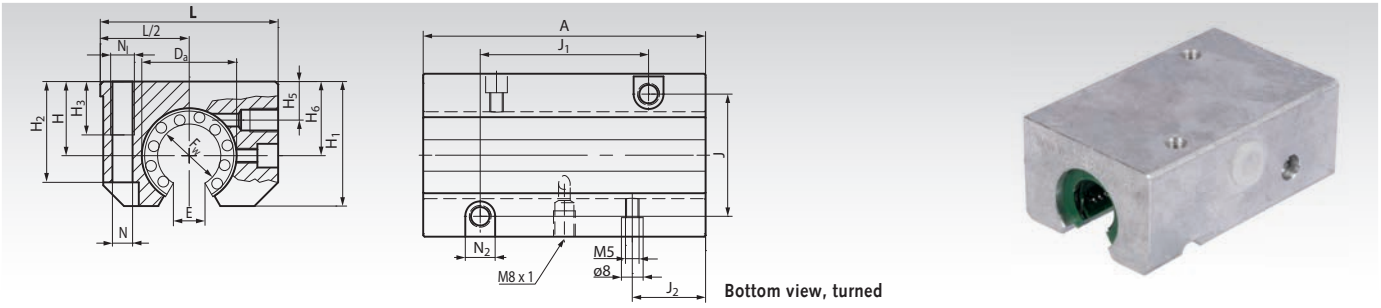

Bottom view, turned

Material: Housing made from extruded aluminium with two open linear bearings of the ISO Series 3 from reliable brand in good quality at low price. Self-aligning capability that accommodates tilting.

All bearings are lubricated ready-to-install.
Recommended shaft tolerance h6.
Spare linear bearing page 491.

Ordering Details: e.g.: Product No. 646 812 03, Linear Bearings Unit KGT-3-0, Economy-Line, Internal Ø 12 mm

Product No. open	F_w mm	A mm	D_a mm	$H^{\pm 0.02}$ mm	H_1 mm	H_2 mm	H_3 mm	H_6 mm	J mm	J_1 mm	J_2 mm	L mm	N mm	N_l* mm	N_2 mm	E mm	Load Rating dyn. C N	Load Rating stat. C_0 N	Weight g
646 812 03	12	76	22	18	30	25	13	16,7	30	40	19,5	43	5,2	M6	10	6,5	1660	2580	210
646 816 03	16	84	26	22	35	30	13	22,0	36	45	21,5	53	5,2	M6	10	9,0	2030	3100	340
646 820 03	20	104	32	25	42	34	18	25,0	45	55	27,0	60	6,8	M8	11	9,0	3400	5260	560
646 825 03	25	130	40	30	51	40	22	31,5	54	70	33,5	78	8,6	M10	15	11,5	6160	9440	1140
646 830 03	30	152	47	35	60	48	26	33,0	62	85	39,5	87	10,3	M12	18	14,0	8910	13620	1670
646 840 03	40	176	62	45	77	60	34	43,5	80	100	45,0	108	14,25	M16	20	19,5	10740	16460	3020
646 850 03	50	224	75	50	88	49	34	47,5	100	125	56,5	132	14,25	M16	20	22,5	17600	27000	5010

* When mounting from the bottom side choose the next smaller screw size.

Shaft steel with shaft support page 479.

Quadro Linear-Bearing Units KGQ-3 ISO Series 3, with Linear Bearings of Closed Design

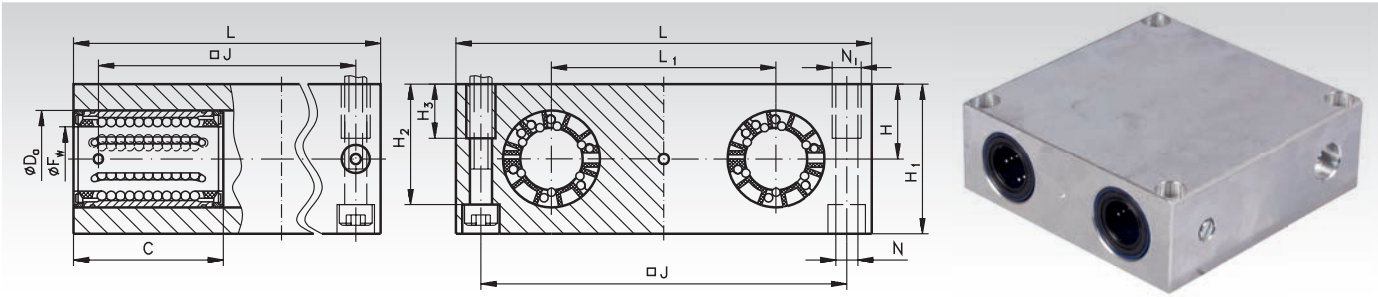

Material: Housing made from extruded aluminium with four closed linear bearings of the ISO Series 3 from premium brand in top quality. With self-aligning capability that accommodates tilting and double-lip seals.

All bearings are lubricated ready-to-install.

Recommended shaft tolerance h6.

Spare linear bearing page 490.

Ordering Details: e.g.: Product No. 646 912 00, Linear Bearings Unit KGQ-3, Internal Ø 12 mm

Product No. Closed	F_w mm	C mm	D_a mm	$H^{\pm 0.02}$ mm	H_1 mm	H_2 mm	H_3 mm	J mm	L mm	L_1 mm	N mm	N_l* mm	Load Rating dyn. C N	Load Rating stat. C_0 N	Weight g
646 912 00	12	32	22	16	32	25	13	73	85	42	5,3	M6	2850	3250	492
646 916 00	16	36	26	18	36	29	13	88	100	54	5,3	M6	3450	3450	744
646 920 00	20	45	32	23	46	37,5	18	115	130	72	6,6	M8	5200	5500	1680
646 925 00	25	58	40	28	56	45	22	140	160	88	8,4	M10	7650	8150	3022
646 930 00	30	68	47	32	64	50,5	26	158	180	96	10,5	M12	12200	12900	4270
646 940 00	40	80	62	40	80	64	34	202	230	122	13,5	M16	20800	20800	8380
646 950 00	50	100	75	48	96	80	34	250	280	152	13,5	M16	30000	28000	14990

* When mounting from the bottom side choose the next smaller screw size.

Shaft steel page 478. Shaft blocks page 487.

Quadro Linear-Bearing Units KGQ-3-0 ISO Series 3, with Linear Bearings of Open Design

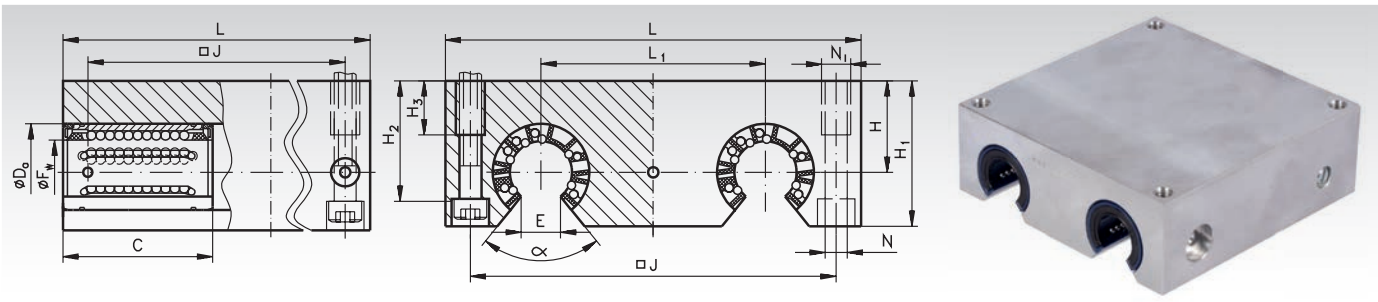

Material: Housing made from extruded aluminium with four open linear bearings of the ISO Series 3 from premium brand in top quality. With self-aligning capability that accommodates tilting and double-lip seals.

All bearings are lubricated ready to install.

Recommended shaft tolerance h6.

Spare linear bearing page 490.

Ordering Details: e.g.: Product No. 646 912 01, Linear Bearings Unit KGQ-3-0, Internal Ø 12 mm

Product No. Open	F_w mm	C mm	D_a mm	$H^{\pm 0.02}$ mm	H_1 mm	H_2 mm	H_3 mm	J mm	L mm	L_1 mm	N mm	N_l* mm	E mm	α Degrees	Load Rating dyn. C N	Load Rating stat. C_0 N	Weight g
646 912 01	12	32	22	18	30	23,4	13	73	85	42	5,3	M6	7,6	78	2850	3250	426
646 916 01	16	36	26	22	35	28,4	13	88	100	54	5,3	M6	10,4	78	3450	3450	698
646 920 01	20	45	32	25	42	33,5	18	115	130	72	6,6	M8	10,8	60	5200	5500	1420
646 925 01	25	58	40	30	51	40	22	140	160	88	8,4	M10	13,2	60	7650	8150	2572
646 930 01	30	68	47	35	60	46,5	26	158	180	96	10,5	M12	14,2	50	12200	12900	3790
646 940 01	40	80	62	45	77	61	34	202	230	122	13,5	M16	18,7	50	20800	20800	7800
646 950 01	50	100	75	55	93	77	34	250	280	152	13,5	M16	23,6	50	30000	28000	13960

* When mounting from the bottom side choose the next smaller screw size.

Shaft steel with shaft support and shaft blocks page 479.

Quadro Linear-Bearing Units KGQ-3 ISO Series 3, Economy-Line, with Linear Bearings of Closed Design

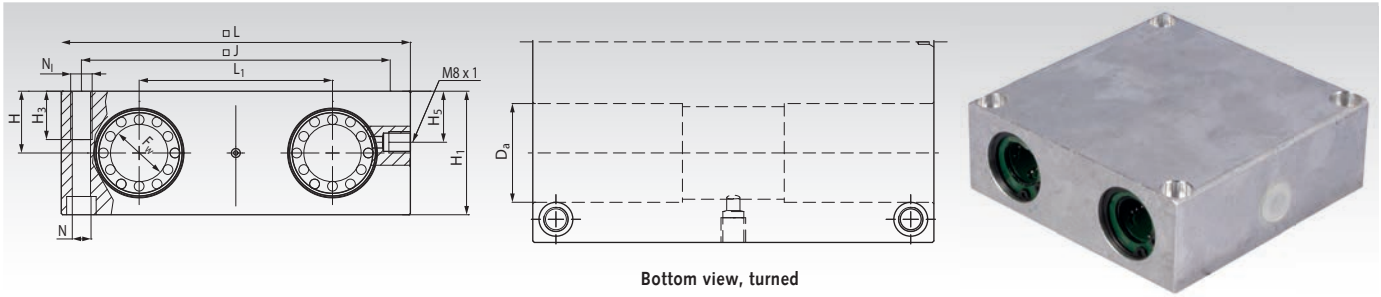

Bottom view, turned

Material: Housing made from extruded aluminium with four closed linear bearings of the ISO Series 3 from reliable brand in good quality at low price. Self-aligning capability that accommodates tilting.

All bearings are lubricated ready-to-install.
Recommended shaft tolerance h6.
Spare linear bearing page 491.

Ordering Details: e.g.: Product No. 646 912 02, Linear Bearings Unit KGQ-3, Economy-Line, Internal Ø 12 mm

Product No. closed	F_w mm	D_a mm	$H^{\pm 0.02}$ mm	H_1 mm	H_3 mm	H_5 mm	J mm	L mm	L_1 mm	N mm	N_l* mm	Load Rating dyn. C N	Load Rating stat. C_0 N	Weight g
646 912 02	12	22	16	32	13	13	73	85	42	5,3	M6	2690	5160	520
646 916 02	16	26	18	36	13	15	88	100	54	5,3	M6	3300	6200	800
646 920 02	20	32	23	46	18	19	115	130	72	6,8	M8	5510	10520	1740
646 925 02	25	40	28	56	22	24	140	160	88	9,0	M10	9980	18880	3190
646 930 02	30	47	32	64	26	27	158	180	96	10,5	M12	14440	27240	4540
646 940 02	40	62	40	80	34	35	202	230	122	13,5	M16	17390	32920	8790
646 950 02	50	75	48	96	34	40	250	280	152	13,5	M16	28510	54000	15520

* When mounting from the bottom side choose the next smaller screw size.

Shaft steel page 478. Shaft blocks page 487.

Quadro Linear-Bearing Units KGQ-3-0 ISO Series 3, Economy-Line, with Linear Bearings of Open Design

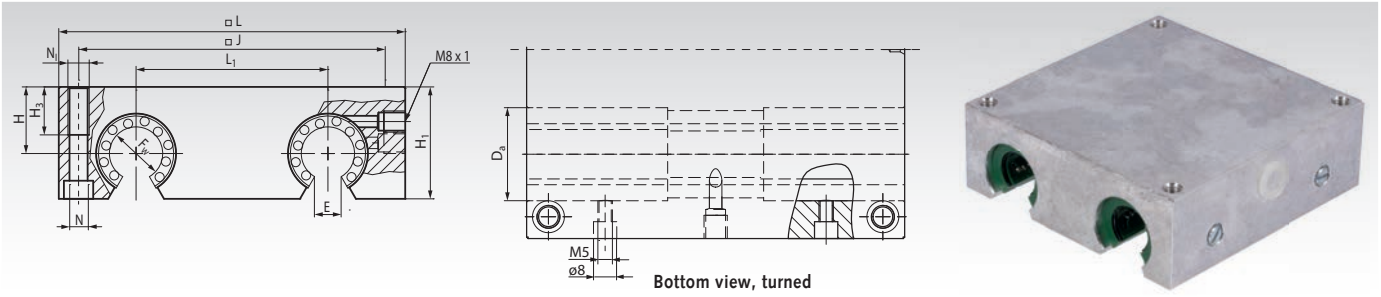

Bottom view, turned

Material: Housing made from extruded aluminium with four open linear bearings of the ISO Series 3 from reliable brand in good quality at low price. Self-aligning capability that accommodates tilting.

All bearings are lubricated ready-to-install.
Recommended shaft tolerance h6.
Spare linear bearing page 491.

Ordering Details: e.g.: Product No. 646 912 03, Linear Bearings Unit KGQ-3-0, Economy-Line, Internal Ø 12 mm

Product No. open	F_w mm	D_a mm	$H^{\pm 0.02}$ mm	H_1 mm	H_3 mm	J mm	L mm	L_1 mm	N mm	N_l* mm	E mm	Load Rating $C_{dyn.}$ N	Load Rating stat. C_0 N	Weight g
646 912 03	12	22	18	30	13	73	85	42	5,3	M6	6,5	2690	5160	470
646 916 03	16	26	22	35	13	88	100	54	5,3	M6	9,0	3300	6200	740
646 920 03	20	32	25	42	18	115	130	72	6,8	M8	9,0	5510	10520	1540
646 925 03	25	40	30	51	22	140	160	88	9,0	M10	11,5	9980	18880	2790
646 930 03	30	47	35	60	26	158	180	96	10,5	M12	14,0	14440	27240	4140
646 940 03	40	62	45	77	34	202	230	122	13,5	M16	19,5	17690	32920	8290
646 950 03	50	75	55	93	34	250	280	152	13,5	M16	22,5	28510	54000	14870

* When mounting from the bottom side choose the next smaller screw size.

Shaft steel with shaft support and shaft blocks page 479.

Profiled Track Rollers LFR

Material: Roller bearing steel 100CR6.

- Standard rollers in high quality with very strong outer ring and special groove design for 2-point contact. Pressure angle 30°.
- Integrated double-row angular contact ball bearings for common axial and high radial load.
- Usable on hardened and ground linear shaft steel with shaft support or on special linear guides.
- On choice: With friction-free metal shields 2Z or with contacting rubber seals 2RS.

Accuracy class PN DIN 620. Radial clearance approaching class CN.
Temperature range: -30°C to +90°C (for short time up to +110°C).

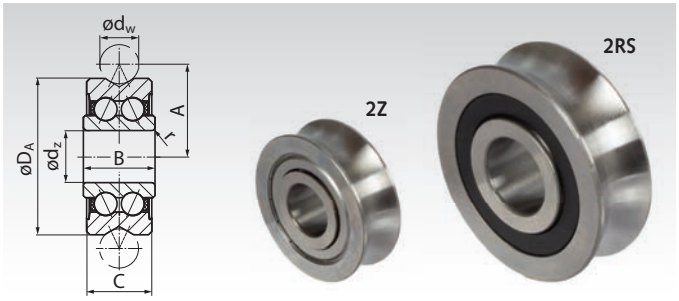

Ordering Details: e.g.: Product No. 647 801 01, Profiled Track Roller LFR50/5-4-2Z

Profiled Track Rollers LFR...-2Z with Shields

Product No.	Type	d_w mm	d_z mm	D_A mm	A mm	B mm	C mm	r mm	C_W kN	C_{W0} kN	F_{rz} kN	F_{0rz} kN	Weight g
647 801 01	LFR50/5-4-2Z	4	5	16	9	8	7	0,2	1,2	0,86	1,3	1,78	9
647 801 02	LFR50/5-6-2Z	6	5	17	10,5	8	7	0,2	1,27	0,82	1,3	1,78	10
647 801 03	LFR50/8-6-2Z	6	8	24	14	11	11	0,3	3,67	2,28	1,3	4,56	20
647 801 04	LFR5201-10-2Z	10	12	35	20,65	15,9	15,9	0,3	8,5	5,1	5,1	10,2	66
647 801 05	LFR5301-10-2Z	10	12	42	24	19	19	0,6	13	7,7	7,5	14,2	135
647 801 06	LFR5302-10-2Z	10	15	47	26,65	19	19	1,0	16,2	9,2	6,2	18,4	170
647 801 07	LFR5201-12-2Z	12	12	35	21,75	15,9	15,9	0,3	8,4	5	5,1	10	66
647 801 08	LFR5204-16-2Z	16	20	52	31,5	22,6	20,6	0,6	16,8	9,5	12,1	16,6	195
647 801 09	LFR5206-20-2Z	20	25	72	41	25,8	23,8	0,6	29,5	16,6	20,7	33,2	435
647 801 10	LFR5206-25-2Z	25	25	72	43,5	25,8	23,8	0,6	29,2	16,4	23,1	32,8	425
647 801 11	LFR5207-30-2Z	30	30	80	51	29	27	1,0	38	20,8	21,4	36,2	600
647 801 12	LFR5208-40-2Z	40	40	98	62,5	38	36	1,0	54,8	29	55	58	1100

Profiled Track Rollers LFR...-2RS with contacting Seals

Product No.	Type	d_w mm	d_z mm	D_A mm	A mm	B mm	C mm	r mm	C_W kN	C_{W0} kN	F_{rz} kN	F_{0rz} kN	Weight g
647 802 01	LFR50/5-4-2RS	4	5	16	9	8	7	0,2	1,2	0,86	1,3	1,78	9
647 802 02	LFR50/5-6-2RS	6	5	17	10,5	8	7	0,2	1,27	0,82	1,3	1,78	10
647 802 03	LFR50/8-6-2RS	6	8	24	14	11	11	0,3	3,67	2,28	1,3	4,56	20
647 802 04	LFR5201-10-2RS	10	12	35	20,65	15,9	15,9	0,3	8,5	5,1	5,1	10,2	66
647 802 05	LFR5301-10-2RS	10	12	42	24	19	19	0,6	13	7,7	7,5	14,2	135
647 802 06	LFR5302-10-2RS	10	15	47	26,65	19	19	1,0	16,2	9,2	6,2	18,4	170
647 802 07	LFR5201-12-2RS	12	12	35	21,75	15,9	15,9	0,3	8,4	5	5,1	10	66
647 802 08	LFR5204-16-2RS	16	20	52	31,5	22,6	20,6	0,6	16,8	9,5	12,1	16,6	195
647 802 09	LFR5206-20-2RS	20	25	72	41	25,8	23,8	0,6	29,5	16,6	20,7	33,2	435
647 802 10	LFR5206-25-2RS	25	25	72	43,5	25,8	23,8	0,6	29,2	16,4	23,1	32,8	425
647 802 11	LFR5207-30-2RS	30	30	80	51	29	27	1,0	38	20,8	21,4	36,2	600
647 802 12	LFR5208-40-2RS	40	40	98	62,5	38	36	1,0	54,8	29	55	58	1100

C_w = effective dynamical bearing load rate, taking account of the deformation of the outer ring.
C_{0w} = effective statical bearing load rate, taking account of the deformation of the outer ring.
F_{rz} = max. dynamical radial load, regarding the breaking strength of the outer ring.
F_{0rz} = max. statical radial load, regarding the breaking strength of the outer ring.

Assignment of Profiled Track Rollers and Bolts, related to Linear Shaft Diameter d_w and Bolt Diameter d_z

d_w	d_z	D_A	Track Roller with Shields		Track Roller with Seals		Zentric Bolt		Eccentric Bolt	
mm	mm	mm	**Product No.**	Type	**Product No.**	Type	**Product No.**	Type	**Artikel-Nr.**	Type
4	5	16	**647 801 01**	LFR50/5-4-2Z	**647 802 01**	LFR50/5-4-2RS	**647 803 01**	LFZ5	**647 804 01**	LFE5
6	5	17	**647 801 02**	LFR50/5-6-2Z	**647 802 02**	LFR50/5-6-2RS	**647 803 01**	LFZ5	**647 804 01**	LFE5
6	8	24	**647 801 03**	LFR50/8-6-2Z	**647 802 03**	LFR50/8-6-2RS	**647 803 03**	LFZ8	**647 804 03**	LFE8
10	12	35	**647 801 04**	LFR5201-10-2Z	**647 802 04**	LFR5201-10-2RS	**647 803 04**	LFZ12	**647 804 04**	LFE12
10	12	42	**647 801 05**	LFR5301-10-2Z	**647 802 05**	LFR5301-10-2RS	**647 803 05**	LFZ12/M12	**647 804 05**	LFE12/M12
10	15	47	**647 801 06**	LFR5302-10-2Z	**647 802 06**	LFR5302-10-2RS	**647 803 06**	LFZ15	**647 804 06**	LFE15
12	12	35	**647 801 07**	LFR5201-12-2Z	**647 802 07**	LFR5201-12-2RS	**647 803 07**	LFZ12x45A1	**647 804 07**	LFE12x45A1
16	20	52	**647 801 08**	LFR5204-16-2Z	**647 802 08**	LFR5204-16-2RS	**647 803 08**	LFZ20x67A1	**647 804 08**	LFE20x67A1
20	25	72	**647 801 09**	LFR5206-20-2Z	**647 802 09**	LFR5206-20-2RS	**647 803 09**	LFZ25x82A1	**647 804 09**	LFE25x82A1
25	25	72	**647 801 10**	LFR5206-25-2Z	**647 802 10**	LFR5206-25-2RS	**647 803 09**	LFZ25x82A1	**647 804 09**	LFE25x82A1
30	30	80	**647 801 11**	LFR5207-30-2Z	**647 802 11**	LFR5207-30-2RS	**647 803 11**	LFZ30x95A1	**647 804 11**	LFE30x95A1
40	40	98	**647 801 12**	LFR5208-40-2Z	**647 802 12**	LFR5208-40-2RS	**647 803 12**	LFZ40x107A1	**647 804 12**	LFE40x107A1

Centric Bolts LFZ for Profil Track Rollers

Material: Heat-treated steel, burnished.

- Centric bolt for mounting profil track rollers on fixed position.
- Normally, a carriage has four rollers: On one side two rollers with centric bolts on fixed position. On the other side two rollers on eccentric bolts, so that they can get adjusted clearance-free.
- The assignment of the bolt to the profil track roller is made by the linear shaft diameter d_w and the bolt diameter d_z.
- Included in scope of delivery, there is a distance washer for release mount of the track roller, for turn without binding (from LFZ8).

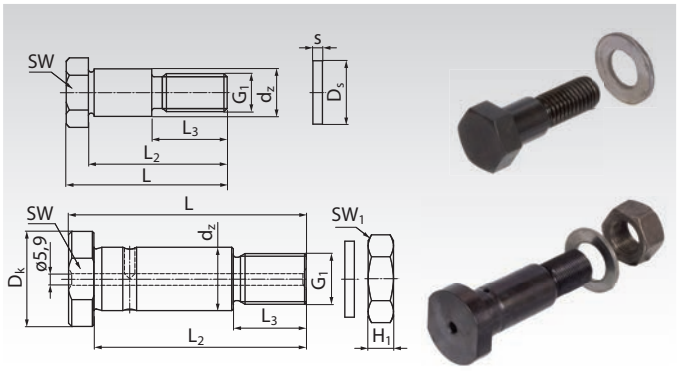

Ordering Details: e.g.: Product No. 647 803 01, Centric Bolt LFZ5

Product No.	Type	d_w mm	d_z mm	L mm	L_2 mm	L_3 mm	D_K mm	G_1 mm	H_1 mm	S mm	D_S mm	SW mm	SW_1 mm	Weight g
647 803 01	LFZ5	4/6	5	19,5	16	9,5	10	M4	-	-	-	3*	-	6
647 803 03	LFZ8	6	8	28,3	24,3	15	-	M8	-	1	14	12	-	14
647 803 04	LFZ12	10	12	43	36	22	-	M10	-	1,8	21	17	-	34
647 803 05	LFZ12/M12	10	12	50,8	43,8	24	-	M12	-	1,8	19	17	-	50
647 803 06	LFZ15	10	15	50,8	43,8	26	-	M12	-	1,8	21	19	-	60
647 803 07	LFZ12x45A1	12	12	50	45	16	20	M10x1,5	8	2	21	17	17	40
647 803 08	LFZ20x67A1	16	20	75	67	23	30	M16x1,5	13	3	30	27	24	200
647 803 09	LFZ25x82A1	20/25	25	92	82	30	40	M20x1,5	16	3	37	36	30	400
647 803 11	LFZ30x95A1	30	30	107	95	32	45	M24x1,5	19	4	44	41	36	620
647 803 12	LFZ40x107A1	40	40	117	107	42	55	M30x1,5	24	4	56	46	46	1100

* Allen screw.

Eccentric Bolts LFE for Profil Track Rollers

Material: Heat-treated steel, burnished.

- Eccentric bolt for mounting profil track rollers on adjustable position, to install the rollers clearance-free.
- Normally, a carriage has four rollers: On one side two rollers with centric bolts on fixed position. On the other side two rollers on eccentric bolts, so that they can get adjusted clearance-free.
- The assignment of the bolt to the profil track roller is made by the linear shaft diameter d_w and the bolt diameter d_z.
- Included in scope of delivery, there is a distance washer for release mount of the track roller, for turn without binding (from LFZ8).

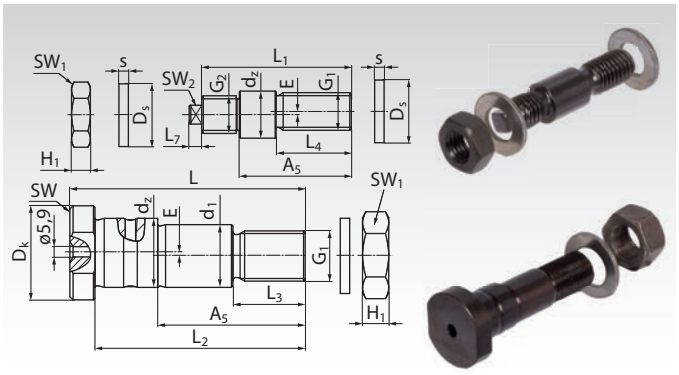

Ordering Details: e.g.: Product No. 647 804 01, Eccentric Bolt LFE5

Product No.	Type	d_w mm	d_z mm	L mm	L_1 mm	L_2 mm	L_3 mm	L_4 mm	L_7 mm	A_5 mm	d_1 mm	D_K mm	G_1 mm	G_2 mm	H_1 mm	S mm	D_S mm	E mm	SW mm	SW_1 mm	SW_2 mm	Weight g
647 804 01	LFE5	4/6	5	-	20,5	-	-	9	-	15	-	-	M4	M4	2,9	-	-	0,5	-	7	2	6
647 804 03	LFE8	6	8	-	33,2	-	-	13,7	3,5	22	-	-	M8	M8x0,75	4	1	14	1	-	13	5	14
647 804 04	LFE12	10	12	-	50	-	-	19,5	5	33,5	-	-	M10	M10	8,4	1,8	21	1	-	17	6	34
647 804 05	LFE12/M12	10	12	-	57	-	-	24	5	41	-	-	M12	M12	6,5	1,8	19	1	-	17	6	50
647 804 06	LFE15	10	15	-	57	-	-	24	5	41	-	-	M12	M12	6,5	1,8	21	1	-	19	6	60
647 804 07	LFE12x45A1	12	12	50	-	45	16	-	-	30	10	20	M10x1,5	-	8	2	21	0,75	17	17	-	40
647 804 08	LFE20x67A1	16	20	75	-	67	23	-	-	45	17	30	M16x1,5	-	13	3	30	1	27	24	-	200
647 804 09	LFE25x82A1	20/25	25	92	-	82	30	-	-	57	22	40	M20x1,5	-	16	3	37	1	36	30	-	400
647 804 11	LFE30x95A1	30	30	107	-	95	32	-	-	67	27	45	M24x1,5	-	19	4	44	1	41	36	-	620
647 804 12	LFE40x107A1	40	40	117	-	107	42	-	-	72	36	55	M30x1,5	-	24	4	56	1	46	46	-	1100

Precision Rail-Guide Sets RE and RE-ACS

Material:
Rails: Tool steel 1.2842 (90MnCrV8), hardness 61±3 HRC.
Rollers: Bearing steel 100Cr6, hardness 62±4 HRC.
Cages and end pieces: Plastic.

Technical data:
- Speed: Up to 3 m/s.
- Acceleration: Up to 80 m/s².
- Accuracy class: P10 (max. 10µm/1000 mm).
  Higher accuracy classes P5 and P2 on request.
- Temperature range: -20°C to +80°C.

Lubrication: The rails have to be lubricated before mounting (z.B. lithium soap grease on mineral oil basis). Relubrication intervals depend on the type of application.

Contents of Delivery: A set consists of 4 half-rails, 2 plastic cages with rollers and 8 end pieces (delivered unassembled).
From these components a complete rail-pair unit can be assembled

Sizes: Two sizes with different lengths. Other sizes on request.

Design RE: For applications with limited travel, if high stiffness or load bearing capacity and positioning accuracy is required in very confined spaces. The rails are usually supplied in pairs, see contents of delivery.

Design RE-ACS: As version RE, but with an additional Anti-Creeping-System (ACS) that prevents the cage from creeping. This means the cage is guided by a plastic gear and teeth at the profile base. Hub and Load Rating are lower than for version RE (see table).

Applications: machine tools, handling systems, special machinery, measuring and testing equipment.

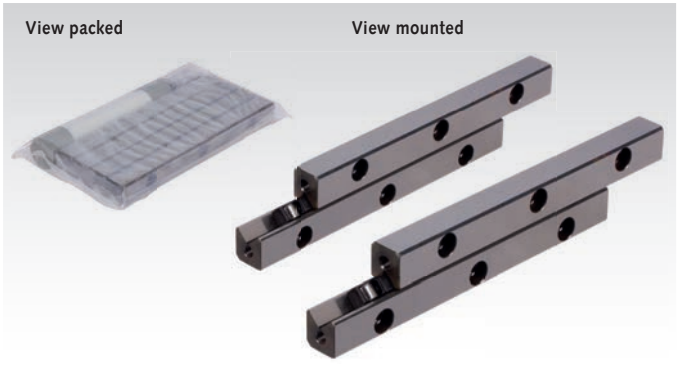

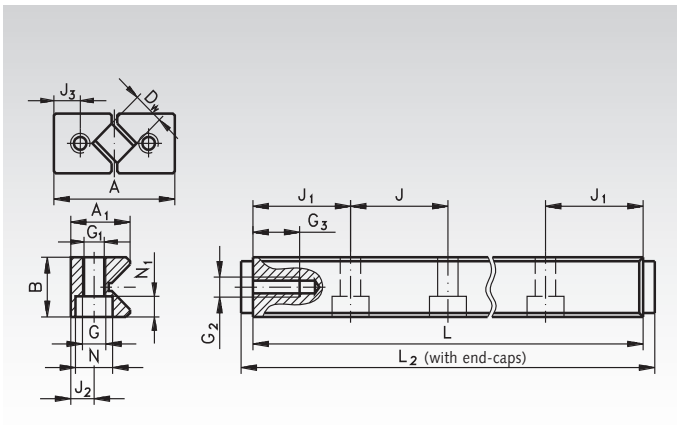

Ordering Details: e.g.: Product No. 649 703 01, Rail-Guide Sets RE Size 3, Length 50 mm

Product No. RE	Size	$A^{-0.3}$ mm	$B^{-0.2}$ mm	L mm	L_2 mm	Stroke mm	A_1 mm	D_w mm	J mm	J_1 mm	J_2 mm	G mm	G_1 mm	N mm	N_1 mm	J_3 mm	G_2 mm	G_3 mm	Load Rating dyn. C N	Load Rating stat. C_0 N	Weight g
649 703 01	3	18	8	50	54	25	8,7	4	25	12,5	3,5	M4	3,3	6	3,2	4	M3	6	4230	5100	103
649 703 02	3	18	8	75	79	38	8,7	4	25	12,5	3,5	M4	3,3	6	3,2	4	M3	6	5803	7650	148
649 703 03	3	18	8	100	104	50	8,7	4	25	12,5	3,5	M4	3,3	6	3,2	4	M3	6	7263	10200	195
649 703 04	3	18	8	125	129	63	8,7	4	25	12,5	3,5	M4	3,3	6	3,2	4	M3	6	8644	12750	242
649 703 05	3	18	8	150	154	75	8,7	4	25	12,5	3,5	M4	3,3	6	3,2	4	M3	6	9964	15300	288
649 703 06	3	18	8	175	179	88	8,7	4	25	12,5	3,5	M4	3,3	6	3,2	4	M3	6	11238	17850	335
649 703 07	3	18	8	200	204	100	8,7	4	25	12,5	3,5	M4	3,3	6	3,2	4	M3	6	12471	20400	382
649 703 15	6	31	15	100	106	46	15,2	8	50	25	6	M6	5,2	9,5	5,2	6,75	M5	9	25743	27300	665
649 703 16	6	31	15	150	156	80	15,2	8	50	25	6	M6	5,2	9,5	5,2	6,75	M5	9	34000	39000	981
649 703 17	6	31	15	200	206	92	15,2	8	50	25	6	M6	5,2	9,5	5,2	6,75	M5	9	44204	54600	1302
649 703 18	6	31	15	250	256	126	15,2	8	50	25	6	M6	5,2	9,5	5,2	6,75	M5	9	51431	66300	1617
649 703 19	6	31	15	300	306	160	15,2	8	50	25	6	M6	5,2	9,5	5,2	6,75	M5	9	58382	78000	1933
649 703 20	6	31	15	350	356	172	15,2	8	50	25	6	M6	5,2	9,5	5,2	6,75	M5	9	67304	93600	2254
649 703 21	6	31	15	400	406	206	15,2	8	50	25	6	M6	5,2	9,5	5,2	6,75	M5	9	73781	105300	2569

Product No. RE-ACS	Size	$A^{-0.3}$ mm	$B^{-0.2}$ mm	L mm	L_2 mm	Stroke mm	A_1 mm	D_w mm	J mm	J_1 mm	J_2 mm	G mm	G_1 mm	N mm	N_1 mm	J_3 mm	G_2 mm	G_3 mm	Load Rating dyn. C N	Load Rating stat. C_0 N	Weight g
649 703 29	3	18	8	50	54	20	8,7	4	25	12,5	3,5	M4	3,3	6	3,2	4	M3	6	3465	4250	102
649 703 30	3	18	8	75	79	30	8,7	4	25	12,5	3,5	M4	3,3	6	3,2	4	M3	6	5294	6800	103
649 703 31	3	18	8	100	104	45	8,7	4	25	12,5	3,5	M4	3,3	6	3,2	4	M3	6	6300	8500	193
649 703 32	3	18	8	125	129	62	8,7	4	25	12,5	3,5	M4	3,3	6	3,2	4	M3	6	7731	11050	240
649 703 33	3	18	8	150	154	79	8,7	4	25	12,5	3,5	M4	3,3	6	3,2	4	M3	6	9090	13600	286
649 703 34	3	18	8	175	179	94	8,7	4	25	12,5	3,5	M4	3,3	6	3,2	4	M3	6	9964	15300	333
649 703 35	3	18	8	200	204	100	8,7	4	25	12,5	3,5	M4	3,3	6	3,2	4	M3	6	11653	18700	381
649 703 43	6	31	15	100	106	37	15,2	8	50	25	6	M6	5,2	9,5	5,2	6,75	M5	9	22826	23400	660
649 703 44	6	31	15	150	156	71	15,2	8	50	25	6	M6	5,2	9,5	5,2	6,75	M5	9	31318	35100	976
649 703 45	6	31	15	200	206	105	15,2	8	50	25	6	M6	5,2	9,5	5,2	6,75	M5	9	39196	46800	1291
649 703 46	6	31	15	250	256	117	15,2	8	50	25	6	M6	5,2	9,5	5,2	6,75	M5	9	49056	62400	1612
649 703 47	6	31	15	300	306	151	15,2	8	50	25	6	M6	5,2	9,5	5,2	6,75	M5	9	56093	74100	1928
649 703 48	6	31	15	350	356	163	15,2	8	50	25	6	M6	5,2	9,5	5,2	6,75	M5	9	65107	89700	2249
649 703 49	6	31	15	400	406	197	15,2	8	50	25	6	M6	5,2	9,5	5,2	6,75	M5	9	71640	101400	2564

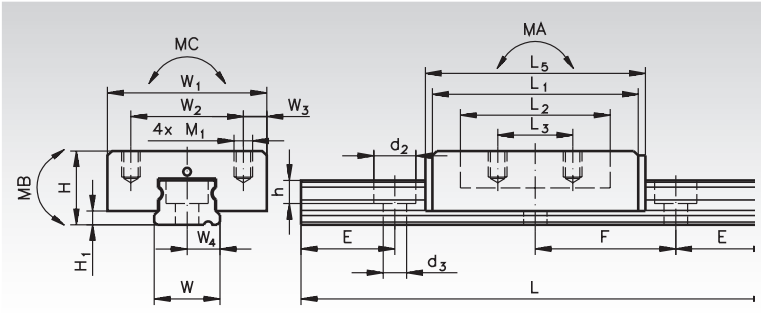

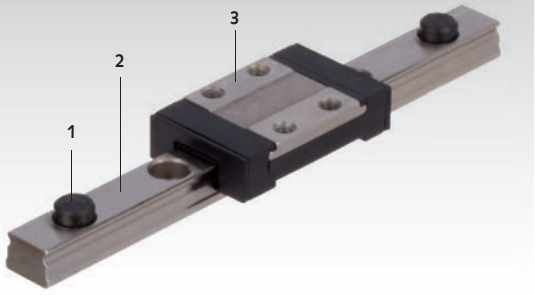

Material: Rails: Stainless steel 1.4037. Guide Carriage: Stainless steel 1.4037 with return zones of POM. Balls: Stainless steel 1.4037. Seals: Polyurethane.

STAINLESS

Technical Data:

- Structure: 4-point contact ball recirculation system with identical load angles and 2 ball recirculation paths per carriage for unlimited stroke.
- Product range: four different rail widths: 7, 9, 12, 15 mm with one or two carriages.
- Temperature range: from -20°C to +80°C.
- Speed: Up to max. 3 m/s.
- Acceleration: Up to 80 m/s².

Use: e.g. for applications in the fields of precision engineering, medical engineering, electronics production and the optical industry. High load bearing capacity at a minimum of mounting space.

Compact: Simple design, compact and cost efficient.

Fast: Ideal for linear movements up to 3 m/s.

Durability: Due to the pointed-arch shaped raceways, the carriages can take up loads and torques acting in any direction. High load bearing capacity and long service life.

Rust-resistant: All components are made from rust-resitant steel or of plastic.

Easy maintenance: Easily relubricatable through lubrications holes located in the end pieces of the carriage.

Lubrication and Sealing

Delivery prelubricated and ready for mounting. The individual carriages can be relubricated through lubrication holes located at the face side. The lubrication intervals depend on the distance travelled, the cycles and ambient conditions.

Demounting and Mounting of the Carriages

The system is premounted when delivered. To demount the system please regard the following instructions:

- Remove the end stop (1) from the rail.
- Position the mounting rail at the end of the rail (2) , make sure there is no misalignment or gap.
- Move the carriage (3) from the rail onto the mounting rail while keeping both rails firm in position. For mounting the carriage on the rail, please proceed in reverse order.

Attention: please always use the enclosed mounting rail, as otherwise the ball retention inside the carriage is not guaranteed.

Ordering Details: e.g.: Product No. 649 010 71, Miniature Profile Guide Rails, 100 mm long, 1 Carriage

Product No.	No. of Carriages Pcs.	Rail Length mm	Rail Width W mm	E mm	Weight g
649 010 71	1	100	7	5,0	29
649 010 73	1	300	7	7,5	67
649 010 75	1	500	7	2,5	105
649 010 91	1	100	9	10,0	51
649 010 93	1	300	9	10,0	113
649 010 95	1	500	9	10,0	175
649 011 23	1	300	12	12,5	216
649 011 24	1	400	12	12,5	278
649 011 25	1	500	12	12,5	340
649 011 53	1	300	15	10,0	366
649 011 54	1	400	15	20,0	470
649 011 56	1	600	15	20,0	672

Product No.	No. of Carriages Pcs.	Rail Length mm	Rail Width W mm	E mm	Weight g
649 020 73	2	300	7	7,5	77
649 020 75	2	500	7	2,5	115
649 020 93	2	300	9	10,0	133
649 020 95	2	500	9	10,0	195
649 021 23	2	300	12	12,5	246
649 021 24	2	400	12	12,5	308
649 021 25	2	500	12	12,5	370
649 021 53	2	300	15	10,0	426
649 021 54	2	400	15	20,0	530
649 021 55	2	600	15	20,0	732

Dimensions of Carriages

Rail Width W mm	H mm	W_1 mm	W_3 mm	W_2 mm	L_1 mm	L_2 mm	L_3 mm	L_5 mm	M_1 mm	Fastening Torque Nm	H_1 mm	Weight kg
7	8	17	2,5	12	22,0	16,0	8	23,5	M2 x 2,5	0,32	1,5	0,01
9	10	20	2,5	15	30,0	21,5	10	32,0	M3 x 3,0	1,10	2,0	0,02
12	13	27	3,5	20	33,0	23,0	15	36,0	M3 x 3,5	1,10	3,0	0,03
15	16	32	3,5	25	41,5	29,5	20	44,5	M3 x 4,0	1,10	4,0	0,06

Dimensions of Rail

Rail Width W mm	H_4 mm	W_4 mm	d_3 x d_2 x h mm	F mm	Dyn. Load C N	Stat. Load C_0 N	Stat. Torque M_A Nm	Stat. Torque M_B Nm	Stat. Torque M_C Nm	Weight kg/m
7	4,8	3,5	2,5 x 4,5 x 2,5	15	860	1670	4,9	4,9	5,2	0,19
9	6,5	4,5	3,5 x 6,0 x 3,5	20	1850	3130	11,2	11,2	13,2	0,31
12	8,8	6,0	3,5 x 6,0 x 4,5	25	2550	4000	15,0	15,0	21,7	0,62
15	10,8	7,5	3,5 x 6,0 x 4,5	40	2880	5390	21,0	21,0	40,2	1,02

Miniature Slide Units

Material: Slides, rail and balls: Stainless steel 1.4034.
Cage and end pieces: Plastic.

Technical data:
- Speed: Up to 3 m/s.
- Acceleration: Up to 80 m/s².
- Accuracy class: P5 (standard, for most applications).
- Preload class: T0 (standard, slight clearance).
  Other accuracy classes and preload classes on request.
- Temperature range: -20°C to +80°C.
  Four rail widths to choose from (7, 9, 12 and 15 mm).

Lubrication: Prelubricated with „Paraliq P460".
Relubrication intervals depend on the type of application.

Ready-to-mount, pre-assembled. for limited stroke. Especially compact construction. High running accuracy (5 µm/100 mm stroke). Extremely smooth motion. All technical parameters were set to ensure high system stiffness and precision guidance.

Contents of Delivery: One slide mounted on a rail.



Application:
- Pneumatics.
- Semi Conductors manufacturing.
- Medical.
- electronics and micro assembly.
- Precision engineering.
- Measuring applications.

Advantages:
- Compact design.
- High load bearing capacity.
- Excellent running accuracy.
- Smooth running.
- High stiffness.
- Easy mounting.

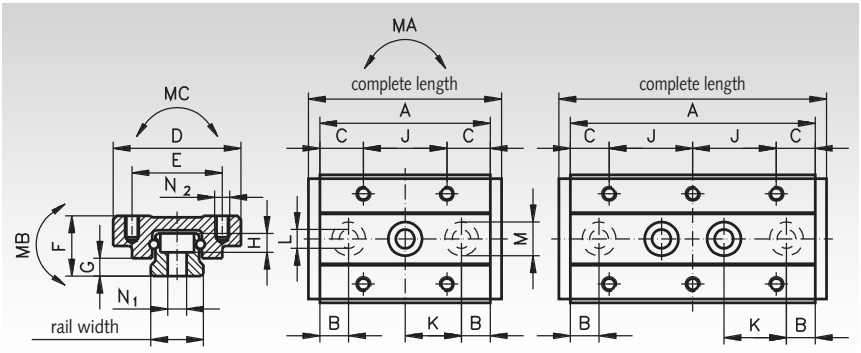

Ordering Details: e.g.: Product No. 649 701 01, Miniature Slide Overall Length 29 mm

Product No.	Rail Width mm	Overall Length mm	Max. Stroke* mm	A mm	B mm	C mm	Number of Bores Slide pcs.	Number of Bores Rail pcs.	Load Rating dyn. C N	Load Rating stat. Co N	Torques M_a, M_b Nm	Torques M_C Nm	Weight g
649 701 01	7	29	24	26	5,5	5	6	2	700	1100	3,5	6	18,4
649 701 02	7	37	34	34	9,5	5	8	2	900	1400	5,5	7	24,2
649 701 03	7	53	50	50	10	5	12	3	1100	2000	12	10	60,5
649 701 04	7	69	66	66	10,5	5	16	4	1400	2700	21	14	79,8
649 701 05	9	35	28	32	8	9,5	4	2	1200	1800	7	12	30,5
649 701 06	9	45	40	42	11	8	6	2	1400	2100	11	15	40,3
649 701 07	9	58	54	55	7,5	8	8	3	1900	3400	18	19	52,3
649 701 08	9	84	78	81	10,5	8	12	4	2500	4900	43	29	76,9
649 701 09	9	97	92	94	7	8	14	5	2700	5500	57	33	87,8
649 701 10	12	40	32	37	6	11	4	2	2200	3300	11	21	64,1
649 701 11	12	54	47	51	13	10,5	6	2	2600	4300	22	28	89,3
649 701 12	12	69	62	66	8	10,5	8	3	3000	5300	36	36	112,9
649 701 13	12	99	95	96	10,5	10,5	12	4	3800	7200	76	52	167,0
649 701 14	12	129	122	126	13	10,5	16	6	4700	9700	131	68	217,4
649 701 15	15	56	50	52	6	16,0	4	2	2800	3900	25	42	134,4
649 701 16	15	89	80	85	22,5	12,5	8	2	4600	7800	73	70	219,7
649 701 17	15	109	102	105	12,5	12,5	10	3	5100	9100	106	84	273,0
649 701 18	15	169	162	165	22,5	12,5	16	4	7300	15000	264	131	426,4

* Overall stroke from one mechanical end stop to the other.

Further Dimensions

Rail Width	D mm	E mm	F mm	G mm	H mm	J mm	K mm	L mm	M mm	N_1 mm	N_2 mm
7	17	12	8	2,35	2,5	8	15	2,5	4,5	M3	M2 x 2,5
9	20	15	10	3,55	3,5	13	20	3,5	6	M4	M3 x3
12	27	20	13	4,7	4,5	15	25	3,5	6	M4	M3 x 3,5
15	32	25	16	6	4,5	20	40	3,5	6	M4	M3 x 4



Linear Motion Guide DA 0115 RC with Ball Carriage on page 809

Linear Motion Guides DFG 115, Friction Guides

Material: Track and carriage from aluminium, hard anodised.
Plain bearings from advanced technical polymer.

Linear Motion Guides with plain bearings for universal use.

- Dimensionally interchangeable with rolling bearing linear motion guides ISO 12090 size 15.
- Three types of carriages on choice: non-adjustable / manual adjustable / automatic adjustment.
- Four track lenghts on choice (for to cut by the customer).
- Several carriages can be used on one track.
- Resistant against corrosion, suitable for high pressure wash down.
- Long service life, maintenance-free.
- All parts have to be ordered seperately.

Ordering details: e.g.: 1x Prod. No. 649 707 01, Carriage Non-Adjustable
1x Prod. No. 649 707 05, Track 500mm

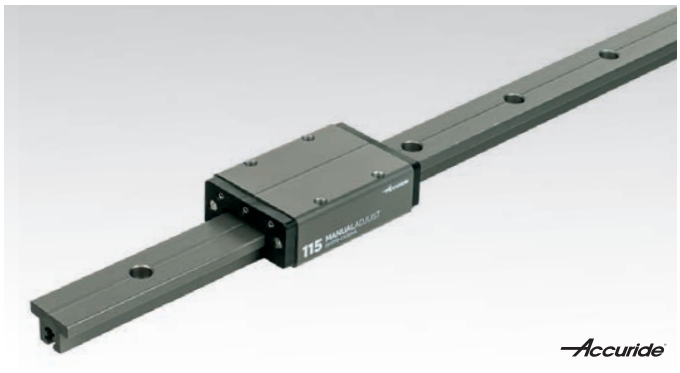

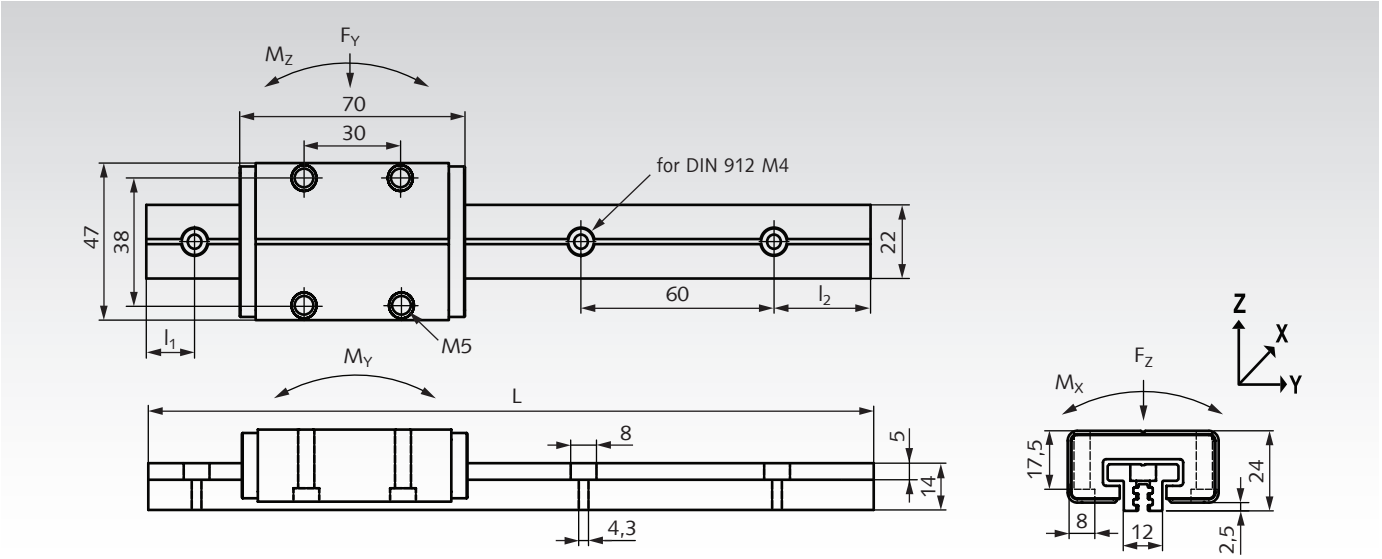

Product No. Carriage	Type	Version	Weight g
649 707 01	DFG115-CASSNA	non-adjustable	92
649 707 02	DFG115-CASSMA	manuel adjustable	98
649 707 03	DFG115-CASSAA	automatic adjustment	96

Product No. Track	Type	L mm	l_1 mm	l_2 mm	Weight g
649 707 05	DFG115-0050	500	40	40	240
649 707 10	DFG115-0100	1000	20	20	480
649 707 15	DFG115-0150	1500	40	20	720
649 707 20	DFG115-0200	2000	40	40	960

Performance Values

Static loads: F_Y = 2kN; F_Z = 4kN; $-F_Z$ = 4kN.

Dynamic loads: F_Y = 0.25kN; F_Z = 0.5kN; $-F_Z$ = 0.5kN.

Static moments: M_X = 10Nm; M_Y = 10Nm; M_Z = 10Nm.

Dynamic moments: M_X = 1.25Nm; M_Y = 1.25Nm; M_Z = 1.25Nm.

Maximum values are mutually exclusive.

Speed: $v_{max.}$ = 2m/s. **Temperature range:** -10°C to +90°C.

Travel at v=1m/s and 20°C, with load F_Z without moments:

Load F_Z:	100N	200N	300N	400N	500N
Travel:	9600km	4600km	3000km	2500km	2000km

Description of Carriage Types

Non-Adjustable



Manuel Adjustable



Allen key SW 1.5mm not included

Automatic Adjustment



Installation Pins



Product No. 649 707 01:
Carriage non-adjustable.
Most cost-effective version.
The clearance cannot be adjusted.
Play of new carriage: max. 0.125mm in Y and Z direction. It can be used for simplier applications or as `floating bearing´ on parallel rails.

Product No. 649 707 02:
Carriage manual adjustable.
For the most applications, this is the preferable type. The clearance or pre-load can be manual adjusted with an Allen key (SW 1.5mm). Adjustment range: from max. clearance 0.125mm in Y and Z direction up to a preload of 30N. Torque at the adjusting screws max. 0.1Nm.

Product No. 649 707 03:
Carriage with automatic adjustment.
Before installing the carriage, the 3 supplied installation pins must be inserted, pushed in and turned a quarter turn to reset and fix the preload springs. After setting the carriage on the track, the 3 installation pins must be turned a quarter turn again and taken out. This releases the preload springs for the automatic adustment to a preload of approx. 4.5N (+/-1N). This adjustment will continue to operate throughout the life of the product.

Cup Rollers with Fastening Element

Material Version A: Housing: Steel, zinc plated.
Ball cup: Steel, case hardened.
Ball: Steel, hardened.

Material Version B: Housing: Steel, zinc plated.
Ball cup: Steel, case hardened.
Ball: Stainless steel, hardened, Material No. 1.3541.

Due to the special shape of the top part, an assembly plug should be used. Assembly plug see below.

Max. speed 2m/sec.

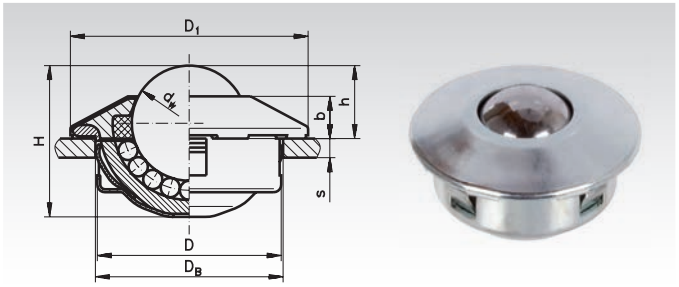

Ordering Details: e.g.: Product No. 654 310 15, Cup Roller with Fastening Element, Version A, 15 mm

Product No. Version A	d_w mm	D mm	D_1 mm	h mm	H mm	b mm	Seating-Ø D_B mm	s min	Load Rating C* N	Weight kg
654 310 15	15	$24^{-0,13}$	31	$9,5^{\pm0,2}$	20,5	5,5	$24^{+0,5}$	1,5	500	0,044
654 310 22	22	$36^{-0,16}$	45	$9,8^{\pm0,2}$	28,6	6,0	$36^{+0,8}$	2,0	1300	0,146
654 310 30	30	$45^{-0,16}$	55	$13,8^{\pm0,3}$	37,5	8,0	$45^{+1,0}$	2,5	2500	0,290

Product No. Version B	d_w mm	D mm	D_1 mm	h mm	H mm	b mm	Seating-Ø D_B mm	s min	Load Rating C* N	Weight kg
654 320 15	15	$24^{-0,13}$	31	$9,5^{\pm0,2}$	20,5	5,5	$24^{+0,5}$	1,5	370	0,044
654 320 22	22	$36^{-0,16}$	45	$9,8^{\pm0,2}$	28,6	6,0	$36^{+0,8}$	2,0	970	0,146
654 320 30	30	$45^{-0,16}$	55	$13,8^{\pm0,3}$	37,5	8,0	$45^{+1,0}$	2,5	1900	0,290

* Due to unevenness of the running surface, there are often only three rollers carrying the weight. Therefore the chosen load rating should equal at least one third of the load.

Assembly Plugs for cup rollers with Fastening Element

Material: Aluminium.

For ball cups with fastening element.

Avoids damage to the upper, conical part of the housing.

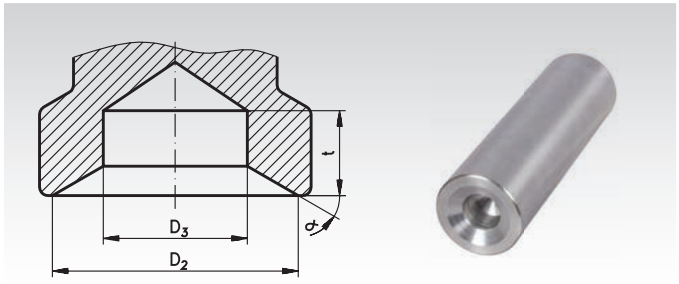

Ordering Details: e.g.: Product No. 654 300 15, Assembly Plug for Ball Cups 15 mm

Product No.	Ball Cup-Ø d_w mm	D_2 mm	D_3 mm	t_{min} mm	α °	Weight kg
654 300 15	15	29	17	10	30	0,34
654 300 22	22	43	24	10	20	0,46
654 300 30	30	53	30	10	24	0,63

Cup Rollers with Steel-Sheet Housing

Material Version A: Housing: Steel, zinc plated.
Ball cup: Steel, case hardened.
Ball: Steel, hardened.

Material Version B: Housing: Steel, zinc plated.
Ball cup: Steel, case hardened.
Ball: Stainless steel, hardened, Material No. 1.3541.

Material Version C: Housing and other parts: Stainless steel, Material No. 1.4301.
Ball cup: Stainless steel, Material No. 1.4301, hardened.
Ball: Stainless steel, hardened, Material No. 1.3541.

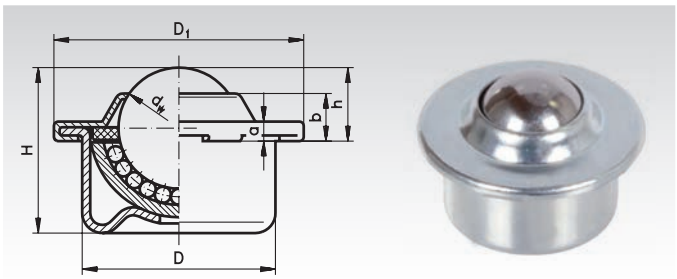

Max. speed 2m/sec.

Ordering Details: e.g.: Product No. 654 330 08, Ball Cup, Version A, 8 mm

Product No. Version A	d_w mm	D mm	D_1 mm	h mm	H mm	a mm	b mm	Load Rating C* N	Weight kg
654 330 08	8	$12{,}6^{\pm 0{,}055}$	17	$4{,}8^{\pm 0{,}15}$	11,2	1,8	3,2	100	0,007
654 330 12	12	$18^{\pm 0{,}055}$	23	$7{,}4^{\pm 0{,}15}$	15,5	2,0	4,3	250	0,018
654 330 15	15	$24^{\pm 0{,}065}$	31	$9{,}5^{\pm 0{,}2}$	21,5	2,5	6,1	500	0,038
654 330 22	22	$36^{\pm 0{,}080}$	45	$9{,}8^{\pm 0{,}2}$	29,5	2,9	5,7	1300	0,132
654 330 30	30	$45^{\pm 0{,}080}$	55	$13{,}8^{\pm 0{,}3}$	37,5	3,7	7,9	2500	0,265
654 330 45	45	$62^{\pm 0{,}095}$	75	$19{,}0^{\pm 0{,}4}$	53,7	4,2	10,3	6000	0,720

Product No. Version B	d_w mm	D mm	D_1 mm	h mm	H mm	a mm	b mm	Load Rating C* N	Weight kg
654 340 08	8	$12{,}6^{\pm 0{,}055}$	17	$4{,}8^{\pm 0{,}15}$	11,2	1,8	3,2	70	0,007
654 340 12	12	$18^{\pm 0{,}055}$	23	$7{,}4^{\pm 0{,}15}$	15,5	2,0	4,3	180	0,018
654 340 15	15	$24^{\pm 0{,}065}$	31	$9{,}5^{\pm 0{,}2}$	21,5	2,5	6,1	370	0,038
654 340 22	22	$36^{\pm 0{,}080}$	45	$9{,}8^{\pm 0{,}2}$	29,5	2,9	5,7	970	0,132
654 340 30	30	$45^{\pm 0{,}080}$	55	$13{,}8^{\pm 0{,}3}$	37,5	3,7	7,9	1900	0,265
654 340 45	45	$62^{\pm 0{,}095}$	75	$19{,}0^{\pm 0{,}4}$	53,7	4,2	10,3	4500	0,720

Product No. Version C	d_w mm	D mm	D_1 mm	h mm	H mm	a mm	b mm	Load Rating C* N	Weight kg
654 350 08	8	$12{,}6^{\pm 0{,}055}$	17	$4{,}8^{\pm 0{,}15}$	11,2	1,8	3,2	70	0,007
654 350 12	12	$18^{\pm 0{,}055}$	23	$7{,}4^{\pm 0{,}15}$	15,5	2,0	4,3	180	0,018
654 350 15	15	$24^{\pm 0{,}065}$	31	$9{,}5^{\pm 0{,}2}$	21,5	2,5	6,1	370	0,038
654 350 22	22	$36^{\pm 0{,}080}$	45	$9{,}8^{\pm 0{,}2}$	29,5	2,9	5,7	970	0,132
654 350 30	30	$45^{\pm 0{,}080}$	55	$13{,}8^{\pm 0{,}3}$	37,5	3,7	7,9	1900	0,265

* Due to unevenness of the running surface, there are often only three rollers carrying the weight. Therefore the chosen load rating should equal at least one third of the load.

Tolerance Rings for cup rollers with Steel-Sheet Housing

Material: Spring band steel.

Matching ball cups with steel-sheet housing.
The use of tolerance rings permits more generous tolerances in the mounting hole (dimension D_1).

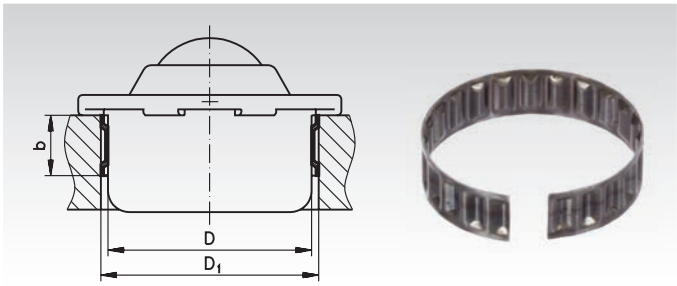

Ordering Details: e.g.: Product No. 654 390 08, Tolerance Ring D 12,6mm

Product No.	Tolerance Ring Matching Ball Cups with Ø d_w mm	D mm	Mounting Dim. D_1 mm	b mm	Weight g
654 390 08	8	12,6	$13{,}87^{+0{,}15}$	$6{,}1^{+0{,}2}$	0,4
654 390 12	12	18	$19{,}70^{+0{,}2}$	$6{,}1^{+0{,}2}$	0,9
654 390 15	15	24	$25{,}7^{+0{,}2}$	$7{,}1^{+0{,}2}$	1,5
654 390 22	22	36	$37{,}7^{+0{,}2}$	$12{,}1^{+0{,}2}$	5,7
654 390 30	30	45	$46{,}7^{+0{,}2}$	$12{,}1^{+0{,}2}$	7,5
654 390 45	45	62	$64{,}1^{+0{,}3}$	$15{,}1^{+0{,}2}$	12,5

Metric Threaded Bars according to the Old Standard DIN 975, Similar to DIN 976

Threaded bars with metric ISO thread or fine thread, rolled, in different materials.

Other sizes and designs on request.

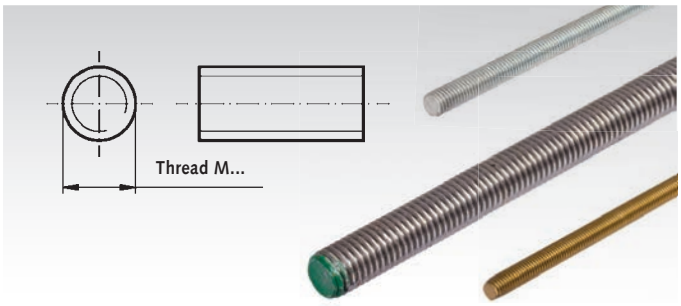

Steel, 8.8, with Metric Thread, Right-Hand

Material: 8.8, zinc plated. Length either 1000 mm or 2000 mm.

Ordering Details: e.g.: Product No. 651 004 00, Threaded Bars DIN 975, 8.8, M4 x 1000 right

Product No. 1m	Product No. 2m	Thread mm	Lead mm	Weight kg / 1m	Weight kg / 2m
651 004 00	--	M4	0,7	0,08	--
651 005 00	--	M5	0,8	0,12	--
651 006 00	--	M6	1	0,18	--
651 008 00	**651 208 00**	M8	1,25	0,32	0,64
651 010 00	**651 210 00**	M10	1,5	0,50	1,0
651 012 00	**651 212 00**	M12	1,75	0,73	1,5
651 016 00	**651 216 00**	M16	2	1,3	2,7
651 020 00	**651 220 00**	M20	2,5	2,1	4,2
651 024 00	**651 224 00**	M24	3	3,0	6,0
651 030 00	**651 230 00**	M30	3,5	4,8	9,5
651 036 00	**651 236 00**	M36	4	6,9	13,8

Steel, 4.6, with Metric Thread, Right / Left

Material: 4.6, zinc plated. Length 1000 mm.

Ordering Details: e.g.: Product No. 650 003 00, Threaded Bar DIN 975, M3, right

Product No. right	Product No. left	Thread mm	Lead mm	Weight per % kg
650 003 00	-	M3	0,5	4,4
650 004 00	-	M4	0,7	7,8
650 005 00	**650 305 00**	M5	0,8	12,4
650 006 00	**650 306 00**	M6	1	17,7
650 008 00	**650 308 00**	M8	1,25	31,9
650 010 00	**650 310 00**	M10	1,5	50,0
650 012 00	**650 312 00**	M12	1,75	72,5
650 016 00	**650 316 00**	M16	2	133
650 020 00	**650 320 00**	M20	2,5	208
650 024 00	**650 324 00**	M24	3	300
650 030 00	**650 330 00**	M30	3,5	475
650 036 00	-	M36	4	690

Steel, 4.6, with Fine Metric Thread, Right-Hand

Material: 4.6, zinc plated. Length 1000 mm.

Ordering Details: e.g.: Product No. 650 708 00, Threaded Bar DIN 975, M8x1 right, fine metric

Product No.	Thread mm	Lead mm	Weight per % kg
650 708 00	M8x1	1	31,9
650 710 00	M10x1	1	50
650 712 00	M12x1,5	1,5	72,5
650 716 00	M16x1,5	1,5	133
650 720 00	M20x1,5	1,5	208
650 724 00	M24x1,5	1,5	300
650 730 00	M30x2	2	475

Stainless Steel, with Metric Thread, Right-Hand

Material: V2A (A2). Length 1000 mm. STAINLESS

Ordering Details: e.g.: Product No. 650 990 03, Threaded Bar DIN 975, M3, right, stainless

Product No.	Thread mm	Lead mm	Weight per % kg
650 990 03	M3	0,5	4,4
650 990 04	M4	0,7	7,8
650 990 05	M5	0,8	12,4
650 990 06	M6	1	17,7
650 990 08	M8	1,25	31,9
650 990 10	M10	1,5	50
650 990 12	M12	1,75	72,5
650 990 16	M16	2	133
650 990 20	M20	2,5	208
650 990 24	M24	3	300
650 990 30	M30	3,5	475

Brass, with Metric Thread, Right-Hand

Material: Ms60 (CuZn40). Length 1000 mm.

Ordering Details: e.g.: Product No. 650 403 00, Threaded Bar DIN 975, M3, right, brass

Product No.	Thread mm	Lead mm	Weight per % kg
650 403 00	M3	0,5	4,8
650 404 00	M4	0,7	8,5
650 405 00	M5	0,8	13,4
650 406 00	M6	1	19,2
650 408 00	M8	1,25	34,5
650 410 00	M10	1,5	54,2
650 412 00	M12	1,75	78,5
650 416 00	M16	2	144
650 420 00	M20	2,5	226

Hexagon Nuts DIN 934

Hexagon nuts DIN 934 with metric ISO thread or fine thread made from various materials.

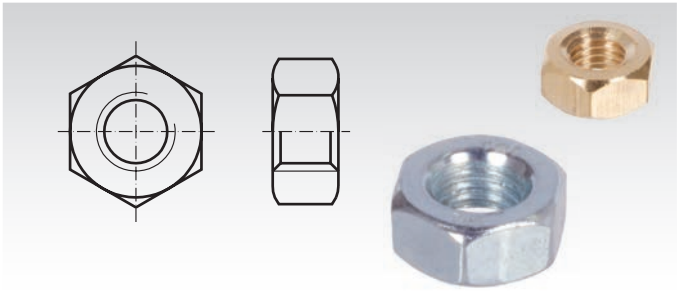

...with metric thread, right hand

Material: Steel, tensile strength 8, zinc-plated.

Ordering Details: e.g.: Product No. 652 003 00, Hexagon Nut DIN 934, M3, Right

Product No.	Thread mm	Width Across Flats mm	Weight p.% Pcs. kg
652 003 00	M3	5,5	0,04
652 004 00	M4	7	0,08
652 005 00	M5	8	0,12
652 006 00	M6	10	0,25
652 008 00	M8	13	0,52
652 010 00	M10	17	1,16
652 012 00	M12	19	1,73
652 016 00	M16	24	3,33
652 020 00	M20	30	6,40
652 024 00	M24	36	11,00
652 030 00	M30	46	22,30
652 036 00	M36	55	39,30

...with metric thread, left hand

Material: Steel, tensile strength 8, zinc-plated.

Ordering Details: e.g.: Product No. 652 305 00, Hexagon Nut DIN 934, M5, Left

Product No.	Thread mm	Width Across Flats mm	Weight p.% Pcs. kg
652 305 00	M5	8	0,12
652 306 00	M6	10	0,25
652 308 00	M8	13	0,52
652 310 00	M10	17	1,16
652 312 00	M12	19	1,73
652 316 00	M16	24	3,33
652 320 00	M20	30	6,40
652 324 00	M24	36	11,00
652 330 00	M30	46	22,30

...with metric, fine thread, right hand

Material: Steel, tensile strength 8, zinc-plated.

Ordering Details: e.g.: Product No. 652 508 00, Hexagon Nut DIN 934, M8, metr. fine

Product No.	Thread mm	Width Across Flats mm	Weight p.% Pcs. kg
652 508 00	M8x1	13	0,52
652 510 00	M10x1	17	1,16
652 512 00	M12x1,5	19	1,73
652 516 00	M16x1,5	24	3,33
652 520 00	M20x1,5	30	6,40
652 524 00	M24x1,5	36	11,00
652 530 00	M30x2	46	22,30

...with metric thread, right hand

Material: Brass Ms60 (CuZn40)

Ordering Details: e.g.: Product No. 652 703 00, Hexagon Nut DIN 934, Brass, M3, Right

Product No.	Thread mm	Width Across Flats mm	Weight p.% Pcs. kg
652 703 00	M3	5,5	0,04
652 704 00	M4	7	0,09
652 705 00	M5	8	0,13
652 706 00	M6	10	0,27
652 708 00	M8	13	0,56
652 710 00	M10	17	1,26
652 712 00	M12	19	1,87
652 716 00	M16	24	3,61
652 720 00	M20	30	7,00
652 724 00	M24	36	11,90
652 730 00	M30	46	24,00

Hexagon Nuts 2308 with Ball Cup (Swivel Nuts)

Material: Heat-treated steel, tensile strength 10, burnished.

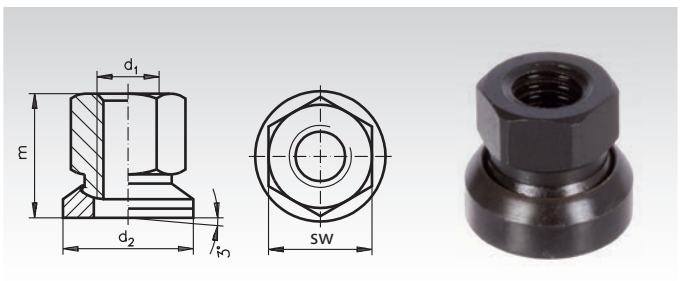

Ordering Details: e.g.: Product No. 653 358 00, Hexagon Nut 2308 with Ball Cup, M8

Product No.	d_1 mm	d_2 mm	m mm	sw mm	Weight g
653 358 00	M8	17	14	13	12
653 360 00	M10	21	17,5	16	27
653 362 00	M12	24	21,5	18	38
653 366 00	M16	30	28	24	68
653 370 00	M20	36	35	30	140
653 374 00	M24	44	42,5	36	255
653 380 00	M30	55	56	46	530

Hexagon Nuts DIN 6330 (Height 1.5 x d)

Material: Heat-treated steel, tensile strength 10.

Shape B, with round contact surface at one end.

The round end matches the spherical washers DIN 6319 page 468.
This combination can be used to compensate bearing displacement.

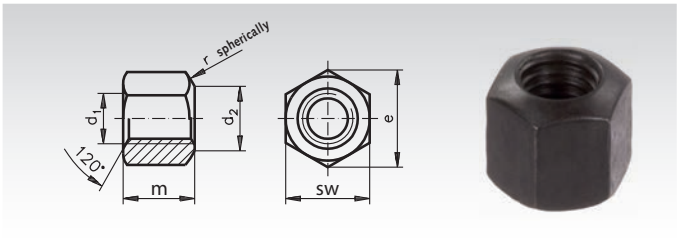

Ordering Details: e.g.: Product No. 653 206 00, Hexagon Nut DIN 6330, M6

Product No.	d_1 mm	d_2 mm	e mm	m mm	r mm	sw mm	Weight g
653 206 00	M6	7	11,5	9	9	10	5
653 208 00	M8	9	15	12	11	13	9
653 210 00	M10	11,5	18,5	15	15	16	20
653 212 00	M12	14	20,8	18	17	18	28
653 214 00	M14	16	24,2	21	20	21	45
653 216 00	M16	18	27,7	24	22	24	58
653 220 00	M20	22	34,6	30	27	30	110
653 224 00	M24	26	41,6	36	32	36	195
653 230 00	M30	32	53,1	45	41	46	405
653 236 00	M36	38	63,5	54	50	55	715

Hexagon Nuts DIN 6331 with Collar (Height 1.5 x d)

Material: Heat-treated steel, tensile strength 10.

The collar on the nut means no separate washer is required.

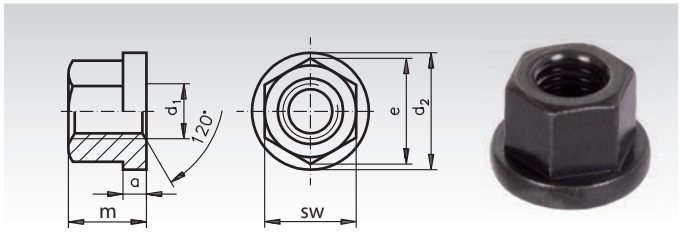

Ordering Details: e.g.: Product No. 653 308 00, Hexagon Nut DIN 6331, M8

Product No.	d_1 mm	d_2 mm	e mm	m mm	a mm	sw mm	Weight g
653 308 00	M8	18	15	12	3,5	13	12
653 310 00	M10	22	18,5	15	4	16	25
653 312 00	M12	25	20,8	18	4	18	35
653 314 00	M14	28	24,2	21	4	21	51
653 316 00	M16	31	27,7	24	5	24	68
653 320 00	M20	37	34,6	30	6	30	130
653 324 00	M24	45	41,6	36	6	36	230
653 330 00	M30	58	53,1	45	8	46	470
653 336 00	M36	68	63,5	54	10	55	810

Extension Nuts 6334 (Height 3 x d)

Material: Heat-treated steel. Strength class 10.

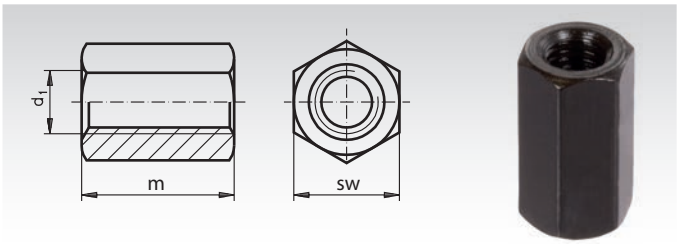

Ordering Details: e.g.: Product No. 653 006 00, Extension Nuts 6334, M6

Product No.	d_1 mm	Lead mm	sw mm	m mm	Weight g
653 006 00	M6	1	10	18	8
653 008 00	M8	1,25	13	24	19
653 010 00	M10	1,5	16	30	42
653 012 00	M12	1,75	18	36	63
653 014 00	M14	2	21	42	95
653 016 00	M16	2	24	48	120
653 020 00	M20	2,5	30	60	235
653 024 00	M24	3	36	72	410
653 030 00	M30	3,5	46	90	850

Turnbuckles Similar to DIN 1478, Zinc-Plated, Made From Seamless Steel Tube

Material: St37 DIN 1629, zinc-plated.

Some turnbuckle nuts are supplied with cross-holes, according to DIN 1478 as at 09/2005, which serve to check the minimum thread engagement.

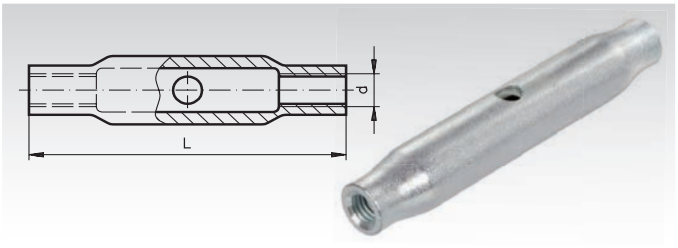

Ordering Details: e.g.: Product No. 653 906 00, Turnbuckle DIN 1478, zinc-plated M6

Product No. zinc-plated	d* mm	L mm	min. thread engagement mm	Adjustability mm	Weight g
653 906 00	M6	110	9,5	90	120
653 908 00	M8	110	12	85	140
653 910 00	M10	125	14	95	190
653 912 00	M12	125	17	90	250
653 916 00	M16	170	22	120	430
653 920 00	M20	200	26	140	650
653 924 00	M24	255	31	180	1100
653 930 00	M30	255	38	160	1300

* One side right-hand thread, other side left-hand thread.

Turnbuckle Nuts Similar to DIN 1479

Material: St37 DIN 1629, either untreated or zinc-plated.

M6 to M16 with overlapping thread,
from M20 middle part relieved.

Some turnbuckle nuts are supplied with cross-holes, according to DIN 1479 as at 09/2005, which serve to check the minimum thread engagement.

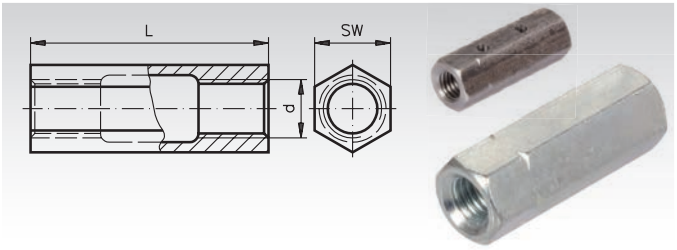

Ordering Details: e.g.: Product No. 653 806 00, Turnbuckle Nut DIN 1479, M6

Product No. untreated	Product No. zinc-plated	d* mm	L mm	SW mm	Min. thread engagement mm	Adjustability mm	Weight g
653 806 00	**653 856 00**	M6	30	10	9,5	15	14
653 808 00	**653 858 00**	M8	35	13	12	15	26
653 810 00	**653 860 00**	M10	45	16	14	21	62
653 812 00	**653 862 00**	M12	55	18	17	25	90
653 816 00	**653 866 00**	M16	75	24	22	35	180
653 820 00	**653 870 00**	M20	95	30	26	47	320
653 824 00	**653 874 00**	M24	115	36	31	57	530
653 830 00	**653 880 00**	M30	125	46	38	53	1080

* One side right-hand thread, other side left-hand thread.

Washers DIN 6340 (extra thick)

Material: Quenched and tempered steel, stamped out, pressed flat or machine straightened, hardened.

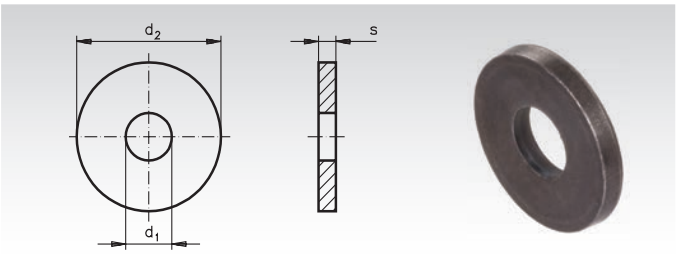

Ordering Details: e.g.: Product No. 653 106 00, Washer DIN 6340 for M6

Product No.	d_1 mm	d_2 mm	s mm	for Bolt Size	Weight g
653 106 00	6,4	17	3	M6	5
653 108 00	8,4	23	4	M8	11
653 110 00	10,5	28	4	M10	16
653 112 00	13	35	5	M12	30
653 114 00*	15*	40	5	M14	42
653 116 00	17	45	6	M16	60
653 120 00	21	50	6	M20	75
653 124 00	25	60	8	M24	135
653 130 00	31	68	10	M30	230

* This size is not part of the DIN.

Loctite thread locking and bonding products page 811.

Retaining Rings DIN 471 for shafts

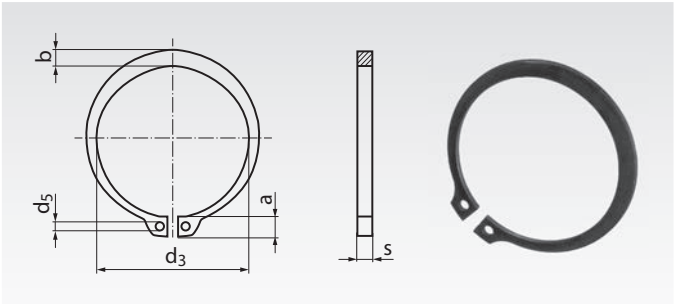

Material: Feather steel, phosphated, oiled.

External rings for axial fixing a machine part on a shaft.

Ordering Details: e.g.: Product No. 617 403 00, Retaining Ring DIN 471, 3mm

Product No. DIN 471	Nominal Size* mm	s mm	d_3 mm	a mm	b mm	d_5 mm	Weight pro% kg
617 403 00	3	0,4	2,7	1,9	0,8	1,0	0,002
617 404 00	4	0,4	3,7	2,2	0,9	1,0	0,002
617 405 00	5	0,6	4,7	2,5	1,1	1,0	0,007
617 406 00	6	0,7	5,6	2,7	1,3	1,2	0,008
617 407 00	7	0,8	6,5	3,1	1,4	1,2	0,012
617 408 00	8	0,8	7,4	3,2	1,5	1,2	0,016
617 409 00	9	1,0	8,4	3,3	1,7	1,2	0,030
617 410 00	10	1,0	9,3	3,3	1,8	1,5	0,034
617 411 00	11	1,0	10,2	3,3	1,8	1,5	0,041
617 412 00	12	1,0	11,0	3,3	1,8	1,7	0,050
617 414 00	14	1,0	12,9	3,5	2,1	1,7	0,064
617 415 00	15	1,0	13,8	3,6	2,2	1,7	0,067
617 416 00	16	1,0	14,7	3,7	2,2	1,7	0,070
617 417 00	17	1,0	15,7	3,8	2,3	1,7	0,082
617 418 00	18	1,2	16,5	3,9	2,4	2,0	0,111
617 419 00	19	1,2	17,5	3,9	2,5	2,0	0,122
617 420 00	20	1,2	18,5	4,0	2,6	2,0	0,130
617 422 00	22	1,2	20,5	4,2	2,8	2,0	0,150
617 424 00	24	1,2	22,2	4,4	3,0	2,0	0,177
617 425 00	25	1,2	23,2	4,4	3,0	2,0	0,190
617 426 00	26	1,2	24,2	4,5	3,1	2,0	0,196
617 428 00	28	1,5	25,9	4,7	3,2	2,0	0,292
617 430 00	30	1,5	27,9	5,0	3,5	2,0	0,332
617 432 00	32	1,5	29,6	5,2	3,6	2,5	0,354
617 435 00	35	1,5	32,2	5,6	3,9	2,5	0,400
617 438 00	38	1,75	35,2	5,8	4,2	2,5	0,562
617 440 00	40	1,75	36,5	6,0	4,4	2,5	0,60
617 445 00	45	1,75	41,5	6,7	4,7	2,5	0,75
617 447 00	47	1,75	43,5	6,8	4,9	2,5	0,75
617 450 00	50	2,0	45,8	6,9	5,1	2,5	1,02
617 455 00	55	2,0	50,8	7,2	5,4	2,5	1,14
617 460 00	60	2,0	55,8	7,4	5,8	2,5	1,29
617 462 00	62	2,0	57,8	7,5	6,0	2,5	1,43
617 475 00	75	2,5	70,5	8,4	7,0	3,0	2,46

* Shaft diameter.

Retaining Rings DIN 472 for boreholes

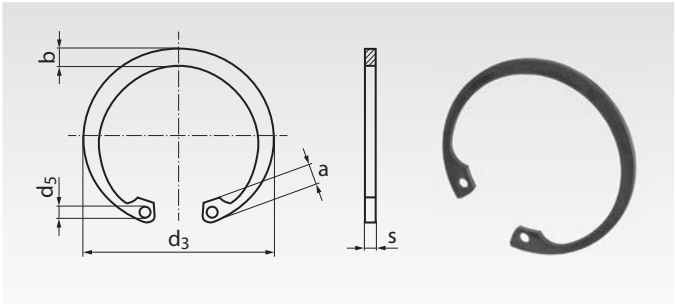

Material: Feather steel, phosphated, oiled.

Internal rings for axial fixing a machine part inside a bore.

Ordering Details: e.g.: Product No. 617 608 00, Retaining Ring DIN 472, 8mm

Product No. DIN 472	Nominal Size* mm	s mm	d_3 mm	a mm	b mm	d_5 mm	Weight pro% kg
617 608 00	8	0,8	8,7	2,4	1,1	1,0	0,010
617 610 00	10	1,0	10,8	3,2	1,4	1,2	0,026
617 611 00	11	1,0	11,8	3,3	1,5	1,2	0,031
617 612 00	12	1,0	13,0	3,4	1,7	1,5	0,037
617 613 00	13	1,0	14,1	3,6	1,8	1,5	0,042
617 614 00	14	1,0	15,1	3,7	1,8	1,7	0,052
617 615 00	15	1,0	16,2	3,7	2,0	1,7	0,056
617 616 00	16	1,0	17,3	3,8	2,0	1,7	0,060
617 617 00	17	1,0	18,3	3,9	2,1	1,7	0,065
617 618 00	18	1,0	19,5	4,1	2,2	2,0	0,074
617 619 00	19	1,0	20,5	4,1	2,2	2,0	0,073
617 620 00	20	1,0	21,5	4,1	2,3	2,0	0,090
617 621 00	21	1,0	22,5	4,2	2,4	2,0	0,100
617 622 00	22	1,0	23,5	4,2	2,5	2,0	0,110
617 624 00	24	1,2	25,9	4,3	2,6	2,0	0,142
617 625 00	25	1,2	26,9	4,5	2,7	2,0	0,150
617 626 00	26	1,2	27,9	4,7	2,8	2,0	0,160
617 628 00	28	1,2	30,1	4,8	2,9	2,0	0,180
617 630 00	30	1,2	32,1	4,8	3,0	2,0	0,206
617 632 00	32	1,2	34,4	5,4	3,2	2,5	0,221
617 635 00	35	1,5	37,8	5,4	3,4	2,5	0,354
617 637 00	37	1,5	39,8	5,5	3,6	2,5	0,374
617 638 00	38	1,5	40,8	5,5	3,7	2,5	0,39
617 640 00	40	1,75	43,5	5,8	3,9	2,5	0,47
617 642 00	42	1,75	45,5	5,9	4,1	2,5	0,54
617 645 00	45	1,75	48,5	6,2	4,3	2,5	0,60
617 647 00	47	1,75	50,5	6,4	4,4	2,5	0,61
617 650 00	50	2,0	54,2	6,5	4,6	2,5	0,73
617 652 00	52	2,0	56,2	6,7	4,7	2,5	0,82
617 655 00	55	2,0	59,2	6,8	5,0	2,5	0,83
617 658 00	58	2,0	62,2	6,9	5,2	2,5	1,05
617 660 00	60	2,0	64,2	7,3	5,4	2,5	1,11
617 662 00	62	2,0	66,2	7,3	5,5	2,5	1,12
617 668 00	68	2,5	72,5	7,8	6,1	3,0	1,60
617 672 00	72	2,5	76,5	7,8	6,4	3,0	1,81
617 675 00	75	2,5	79,5	7,8	6,6	3,0	1,88
617 680 00	80	2,5	85,5	8,5	7,0	3,0	2,20
617 685 00	85	3,0	90,5	8,6	7,2	3,5	2,53
617 690 00	90	3,0	95,5	8,6	7,6	3,5	3,30
617 700 00	100	3,0	105,5	9,2	8,4	3,5	4,20
617 710 00	110	4,0	117,0	10,4	9,0	3,5	6,45

* Borehole diameter.

Locknuts DIN 981, Steel or Stainless Steel

Material:
standard: Steel, min. strength 350 N/mm².
stainless: Stainless steel 1.4618 (AISI 201).

STAINLESS

These nuts are used for unsafed, quickly to loosen applications, or for a safe connection with an additional lockwasher DIN 5406 (for these lockwashers, a keyway is required on the shaft thread).

Recommend tolerance for the shaft thread: 6g DIN ISO 965.

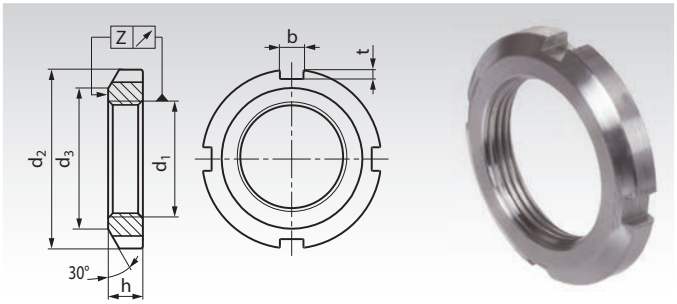

Ordering Details: e.g.: Product No. 653 630 00, Locknut DIN 981, Steel, KM 0

Product No. standard	Product No. stainless	Type	d_1 mm	d_2 mm	d_3 min. mm	h mm	b mm	t mm	Z mm	Weight g
653 630 00	653 996 30	KM 0	M10 x 0,75	18	13,5	4	3	2	0,04	4
653 632 00	653 996 32	KM 1	M12 x 1	22	17	4	3	2	0,04	7
653 634 00	653 996 34	KM 2	M15 x 1	25	21	5	4	2	0,04	10
653 637 00	653 996 37	KM 3	M17 x 1	28	24	5	4	2	0,04	13
653 640 00	653 996 40	KM 4	M20 x 1	32	26	6	4	2	0,04	19
653 644 00	653 996 44	KM 5	M25 x 1,5	38	32	7	5	2	0,04	25
653 648 00	653 996 48	KM 6	M30 x 1,5	45	38	7	5	2	0,04	43
653 653 00	653 996 53	KM 7	M35 x 1,5	52	44	8	5	2	0,04	53
653 658 00	653 996 58	KM 8	M40 x 1,5	58	50	9	6	2,5	0,04	85
653 662 00	653 996 62	KM 9	M45 x 1,5	65	56	10	6	2,5	0,04	119
653 665 00	653 996 65	KM 10	M50 x 1,5	70	61	11	6	2,5	0,04	148
653 668 00	653 996 68	KM 11	M55 x 2	75	67	11	7	3	0,05	158
653 671 00	653 996 71	KM 12	M60 x 2	80	73	11	7	3	0,05	174
653 673 00	653 996 73	KM 13	M65 x 2	85	79	12	7	3	0,05	203
653 675 00	653 996 75	KM 14	M70 x 2	92	85	12	8	3,5	0,05	242
653 678 00	653 996 78	KM 15	M75 x 2	98	90	13	8	3,5	0,05	287
653 680 00	653 996 80	KM 16	M80 x 2	105	95	15	8	3,5	0,05	237
653 683 00	653 996 83	KM 17	M85 x 2	110	102	16	8	3,5	0,05	451
653 685 00	653 996 85	KM 18	M90 x 2	120	108	16	10	4	0,05	556
653 687 00	653 996 87	KM 19	M95 x 2	125	113	17	10	4	0,05	658
653 690 00	653 996 90	KM 20	M100 x 2	130	120	18	10	4	0,05	698

Lockwashers DIN 5406 for Locknuts DIN 981, Steel or Stainless Steel

Material:
standard: Steel, min. strength 350 N/mm².
stainless: Stainless steel 1.4618 (AISI 201).

STAINLESS

Safety plates for locknuts DIN 981.

A keyway is required on the shaft thread.

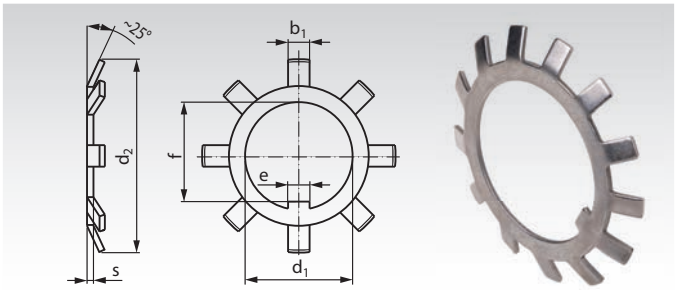

Ordering Details: e.g.: Product No. 653 630 01, Lockwasher DIN 5406 MB 0

Product No. standard	Product No. stainless	Type	matching nut type	d_1 mm	d_2 mm	d_3 mm	e mm	f mm	b_1 mm	s mm	Weight g
653 630 01	653 995 30	MB 0	KM 0	10	21	13,5	3	8,5	3	1,00	1
653 632 01	653 995 32	MB 1	KM 1	12	25	17	3	10,5	3	1,00	2
653 634 01	653 995 34	MB 2	KM 2	15	28	21	4	13,5	4	1,00	3
653 637 01	653 995 37	MB 3	KM 3	17	32	24	4	15,5	4	1,00	3
653 640 01	653 995 40	MB 4	KM 4	20	36	26	4	18,5	4	1,00	4
653 644 01	653 995 44	MB 5	KM 5	25	42	32	5	23,0	5	1,25	6
653 648 01	653 995 48	MB 6	KM 6	30	49	38	5	27,5	5	1,25	8
653 653 01	653 995 53	MB 7	KM 7	35	57	44	6	32,5	5	1,25	10
653 658 01	653 995 58	MB 8	KM 8	40	62	50	6	37,5	6	1,25	12
653 662 01	653 995 62	MB 9	KM 9	45	69	56	6	42,5	6	1,25	15
653 665 01	653 995 65	MB 10	KM 10	50	74	61	6	47,5	6	1,25	16
653 668 01	653 995 68	MB 11	KM 11	55	81	67	8	52,5	7	1,50	20
653 671 01	653 995 71	MB 12	KM 12	60	86	73	8	57,5	7	1,50	25
653 673 01	653 995 73	MB 13	KM 13	65	92	79	8	62,5	7	1,50	29
653 675 01	653 995 75	MB 14	KM 14	70	98	85	8	66,5	8	1,50	33
653 678 01	653 995 78	MB 15	KM 15	75	104	90	8	71,5	8	1,50	36
653 680 01	653 995 80	MB 16	KM 16	80	112	95	10	76,5	8	1,80	46
653 683 01	653 995 83	MB 17	KM 17	85	119	102	10	81,5	8	1,80	52
653 685 01	653 995 85	MB 18	KM 18	90	126	108	10	86,5	10	1,80	62
653 687 01	653 995 87	MB 19	KM 19	95	133	113	10	91,5	10	1,80	67
653 690 01	653 995 90	MB 20	KM 20	100	142	120	12	96,5	10	1,80	77

Locknuts UW with Locking Device, Steel and Stainless Steel

Material:
standard: Body of the nut: Low carbon steel (FUOOSS).
stainless: Body of the nut: Stainless steel 1.4305.
Locking insert: Stainless Steel.

With these slotted nuts no additional lock washers or keyways are required. No keyway or washer required for roller bearing. Designed for easy assembly. Maintenance-free construction. The bolt thread has to meet the medium quality of ISO 965.

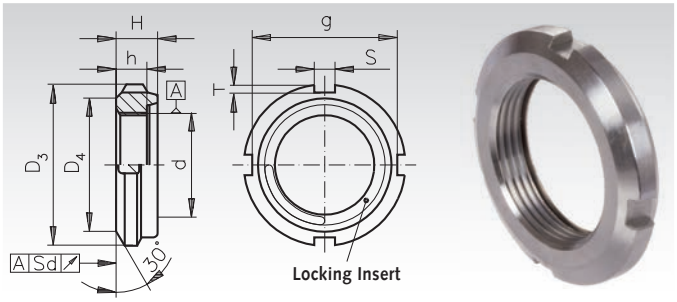

Ordering Details: e.g.: Product No. 653 430 00, Slot Nut UW, M10 x 0.75

Product No. standard	Product No. stainless	d mm	$D_3^{-0,5}$ mm	$D_4^{-0,5}$ mm	$g^{-0,5}$ mm	T mm	$S^{\pm 0,2}$ mm	h mm	H mm	Tol. H mm	Sd mm	Weight g
653 428 00	-	M8 x 0,75	16	12	13	1,5	3	4,3	5,3	±0,3	0,05	4
653 430 00	**653 994 30**	M10 x 0,75	18	13	14,4	1,8	3	4	5,2	±0,3	0,05	4,5
653 432 00	**653 994 32**	M12 x 1	22	17	18,4	1,8	3	4	5,4	±0,3	0,05	8
653 434 00	**653 994 34**	M15 x 1	25	21	21,4	1,8	4	5	6,5	±0,5	0,05	12
653 437 00	**653 994 37**	M17 x 1	28	24	24,2	1,9	4	5	6,4	±0,5	0,05	13
653 440 00	**653 994 40**	M20 x 1	32	26	28,4	1,8	4	6	7,7	±0,5	0,05	23
653 444 00	**653 994 44**	M25 x 1,5	38	32	34	2	5	7	9,1	±0,5	0,05	36
653 448 00	**653 994 48**	M30 x 1,5	45	38	41	2	5	7	9,1	±0,8	0,05	45
653 453 00	**653 994 53**	M35 x 1,5	52	44	48	2	5	8	10,2	±0,8	0,05	70
653 458 00	**653 994 58**	M40 x 1,5	58	50	53	2,5	6	9	11,2	±0,8	0,05	95
653 462 00	**653 994 62**	M45 x 1,5	65	56	60	2,5	6	10	12,5	±1,0	0,05	130
653 465 00	**653 994 65**	M50 x 1,5	70	61	65	2,5	6	11	13,5	±1,0	0,05	160
653 468 00	**653 994 68**	M55 x 2	75	67	69	3	7	11	13,5	±1,0	0,07	185
653 471 00	**653 994 71**	M60 x 2	80	73	74	3	7	11	13,5	±1,0	0,07	200

Please note:
Ensure that there are at least two or three full threads behind the locking insert.
This slot nut must not be used on shafts with keyway.
Lubricate the nut when screwing it onto the shaft.
Larger thread diameters can be supplied on request.

Function:
This system consists of a shaft nut and a special spring, acting as friction ring. This special spring is integrated into the upper part of the nut.
Due to the lead of the thread the special spring locks itself between shaft and nut. **The system is locked in any position!**

Hook Wrenches DIN 1810 form A for Locknuts

Material: High grade tool steel, burnished.

Hook wrenches for locknuts DIN 981 and slotted nuts DIN 1804.

Please note: For some applications like mounting the precision levelling adjusters, there are two wrenches required.



Ordering Details: e.g.: Product No. 653 400 12, Hook Wrench 12-14mm

Product No.	D_m Range mm	Length mm	Thickness mm	Weight g
653 400 12	12 - 14	110	3	25
653 400 16	16 - 20	110	3	25
653 400 25	25 - 28	136	4	45
653 400 30	30 - 32	136	4	50
653 400 34	34 - 36	170	5	90
653 400 40	40 - 42	170	5	90
653 400 45	45 - 50	206	6	155
653 400 52	52 - 55	206	6	160
653 400 58	58 - 62	240	7	260
653 400 68	68 - 75	240	7	255
653 400 80	80 - 90	280	8	410
653 400 95	95 - 100	280	8	405
653 401 10	110 - 115	335	10	745
653 401 20	120 - 130	335	10	720

Locknuts KMK with Integral Locking Device

Material: Body of the nut steel, min. strength 350 N/mm².

Design: Metric ISO thread according to DIN 13 part 27. Tolerance class: 5H or ISO 965/III-1980.

Reusable shaft nut with integrated locking device. Special feature of the shaft nut is the locking insert, integrated into the nut. This insert is threaded and thus does not cause any damage. The locking insert is pressed against the shaft thread with a locking screw and thus prevents the nut from turning.

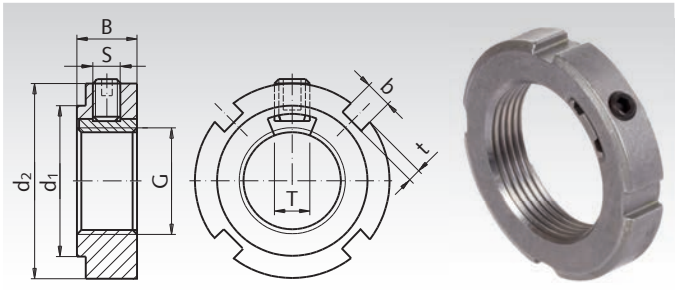

Ordering Details: e.g.: Product No. 653 530 00, Shaft Nut KMK, M10 x 0.75

Product No.	Type	Thread G mm	d_1 mm	d_2 mm	B mm	b mm	h mm	S mm	T mm	T_{AS}[1] Nm	Permissible Axial Load kN	Weight g
653 530 00	KMK 0	M10 x 0,75	16	20	9	3	2	M5	4	4	9,8	16
653 532 00	KMK 1	M12 x 1	18	22	9	3	2	M5	4	4	11,8	18
653 534 00	KMK 2	M15 x 1	21	25	9	4	2	M5	4	4	14,6	21
653 537 00	KMK 3	M17 x 1	24	28	9	4	2	M5	4	4	19,6	27
653 540 00	KMK 4	M20 x 1	28	32	9	4	2	M5	4	4	24,0	30
653 544 00	KMK 5	M25 x 1,5	34	38	9	5	2	M5	10	4	31,5	30
653 548 00	KMK 6	M30 x 1,5	41	45	9	5	2	M5	10	4	36,5	60
653 553 00	KMK 7	M35 x 1,5	48	52	9	5	2	M5	10	4	50,0	70
653 558 00	KMK 8	M40 x 1,5	53	58	11	6	2,5	M6	12	8	62,0	110
653 562 00	KMK 9	M45 x 1,5	60	65	11	6	2,5	M6	12	8	78,0	140
653 565 00	KMK 10	M50 x 1,5	65	70	15	6	2,5	M8	12	18	91,5	180
653 568 00	KMK 11	M55 x 2	69	75	15	7	3	M8	12	18	91,5	190
653 571 00	KMK 12	M60 x 2	74	80	15	7	3	M8	12	18	95,0	200

[1] Fastening Torque of Locking Screw.

Locknuts KMT with locking pins

Material: Body of the nut steel, min. strength 350 N/mm².

Reusable shaft nut with integrated locking devices. Special features of the shaft nut are the locking inserts from brass. These inserts are threaded and thus does not cause any damage. The locking inserts are pressed against the shaft thread with locking screws. With the screws, the runout can laso be adjusted. Slotnut-design. Up to size 15 with two additional wrench flats. KMT-Locknuts are designed for applications, which require a high precision and trustable locking.

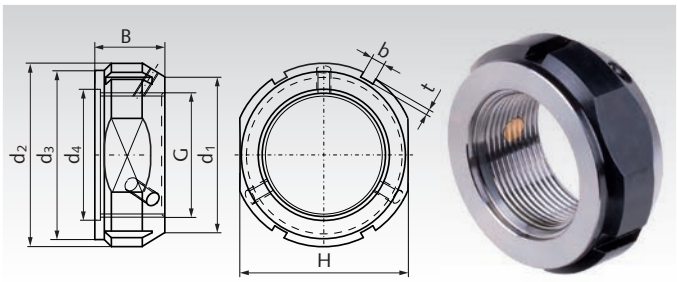

Ordering Details: e.g.: Product No. 653 580 00, Shaft Nut KMT, M10 x 0.75

Product No.	Type	Thread G mm	d_1 mm	d_2 mm	d_3 mm	d_4 mm	B mm	H mm	b mm	h mm	S mm	T_{AS}[1] Nm	Permissible Axial Load kN	Weight g
653 580 00	KMT 0	M10 x 0,75	21	28	23	11	14	24	4	2	M5	4,5	35	45
653 580 01	KMT 1	M12 x 1	23	30	25	13	14	27	4	2	M5	4,5	40	50
653 580 02	KMT 2	M15 x 1	26	33	28	16	16	30	4	2	M5	4,5	60	75
653 580 03	KMT 3	M17 x 1	29	37	33	18	18	34	5	2	M6	8	80	100
653 580 04	KMT 4	M20 x 1	32	40	35	21	18	36	5	2	M6	8	90	110
653 580 05	KMT 5	M25 x 1,5	36	44	39	26	20	41	5	2	M6	8	130	130
653 580 06	KMT 6	M30 x 1,5	41	49	44	32	20	46	5	2	M6	8	160	160
653 580 07	KMT 7	M35 x 1,5	46	54	49	38	22	50	5	2	M6	8	190	190
653 580 08	KMT 8	M40 x 1,5	56	65	59	42	22	60	6	2,5	M6	8	210	300
653 580 09	KMT 9	M45 x 1,5	61	70	64	48	22	65	6	2,5	M6	8	240	330
653 580 10	KMT 10	M50 x 1,5	65	75	68	52	25	70	7	3	M6	8	300	400
653 580 11	KMT 11	M55 x 2	74	85	78	58	25	80	7	3	M8	18	340	540
653 580 12	KMT 12	M60 x 2	78	90	82	62	26	85	8	3,5	M8	18	380	610
653 580 13	KMT 13	M65 x 2	83	95	87	68	28	90	8	3,5	M8	18	460	710
653 580 14	KMT 14	M70 x 2	88	100	92	72	28	95	8	3,5	M8	18	490	750
653 580 15	KMT 15	M75 x 2	93	105	97	77	28	100	8	3,5	M8	18	520	800
653 580 16	KMT 16	M80 x 2	98	110	100	83	32	-	8	3,5	M8	18	620	900
653 580 17	KMT 17	M85 x 2	107	120	110	88	32	-	10	4	M10	35	650	1150
653 580 18	KMT 18	M90 x 2	112	125	115	93	32	-	10	4	M10	35	680	1200
653 580 19	KMT 19	M95 x 2	117	130	120	98	32	-	10	4	M10	35	710	1250
653 580 20	KMT 20	M100 x 2	122	135	125	103	32	-	10	4	M10	35	740	1300

[1] Fastening Torque of Locking Screw.

T-Nuts DIN 508

Material: Tempered steel, tensile strength 8, blank.
Suitable for T-slots DIN 650.

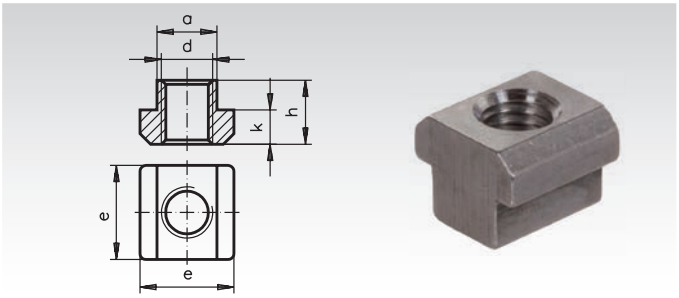

Ordering Details: e.g.: Product No. 655 105 00, Nut for T-Slots DIN 508, M5

Product No.	d mm	for T-Slots mm	a mm	e mm	h mm	k mm	Weight g
655 105 00	M5	6	5,6	10	8	4	3
655 106 00	M6	8	7,6	13	10	6	8
655 108 00	M8	10	9,6	15	12	6	14
655 110 00	M10	12	11,6	18	14	7	22
655 112 00	M12	14	13,6	22	16	8	34
655 114 00	M14*	16	15,6	25	18	9	50
655 116 00	M16	18	17,6	28	20	10	68
655 120 00	M20	22	21,6	35	28	14	155
655 124 00	M24	28	27,6	44	36	18	330

* These dimension is not part of the DIN.

Threaded bars page 510. Nuts with collar page 512. Washers page 513.

T-Slot Bolts DIN 787

Material: Tempered steel, forged, slot flats milled, burnished.
Tensile strength:
Up to M12: strength 10.9. Above M12: strength 8.8.

More sizes up to M36 x 600mm on request.

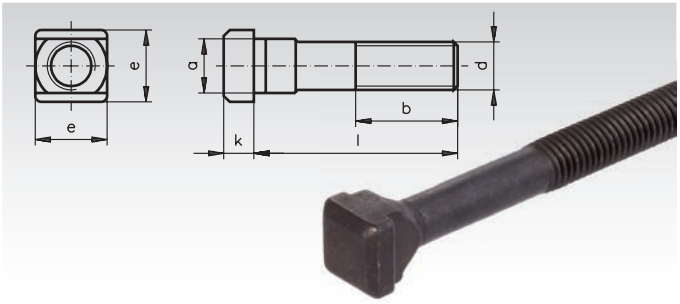

Ordering Details: z.B.: Product No. 655 001 00, Bolt for T-Slots DIN 787, M6 x 25 mm

Product No.	d mm	for T-Slots mm	l mm	a mm	b mm	e mm	k mm	Weight g
655 001 00	M6	6	25	5,6	15	10	4	10
655 002 00	M6	6	40	5,6	28	10	4	15
655 004 00	M8	8	50	7,6	35	13	6	26
655 005 00	M8	8	80	7,6	50	13	6	37
655 006 00	M10	10	40	9,6	30	15	6	33
655 007 00	M10	10	63	9,6	45	15	6	50
655 009 00	M10	10	100	9,6	60	15	6	67
655 011 00	M12	12	50	11,6	35	18	7	58
655 012 00	M12	12	80	11,6	55	18	7	87
655 014 00	M12	12	125	11,6	75	18	7	120
655 015 00	M12	14	50	13,6	35	22	8	76
655 016 00	M12	14	80	13,6	55	22	8	100
655 018 00	M12	14	125	13,6	75	22	8	135
655 019 00	M16	16	63*	15,6	45	25	9	136
655 020 00	M16	16	100*	15,6	65	25	9	200
655 022 00	M16	16	160*	15,6	100	25	9	290
655 023 00	M16	18	63	17,6	45	28	10	162
655 024 00	M16	18	100	17,6	65	28	10	220
655 026 00	M16	18	160	17,6	100	28	10	300
655 028 00	M20	20	160*	19,6	100	32	12	444
655 029 00	M20	22	80	21,6	55	35	14	332
655 030 00	M20	22	125	21,6	85	35	14	390
655 032 00	M20	22	160*	21,6	100	35	14	497

* These dimensions are not part of the DIN.

Threaded bars page 510. Nuts with collar page 512. Washers page 513.

Knurled Nuts DIN 466, Steel and Stainless Steel

Material: Steel, tensile strength 5,
visible face precision turned, burnished.

Material: Stainless steel 1.4305,
visible face precision turned,
sand blasted matt.

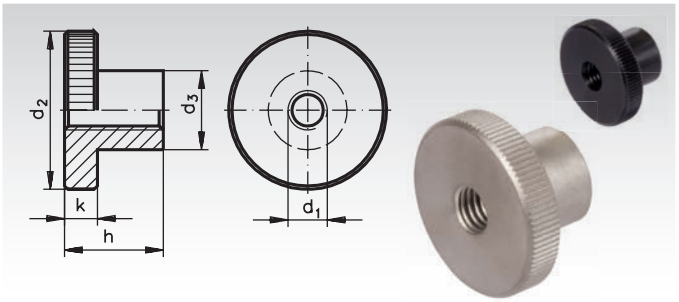

Ordering Details: e.g.: Product No. 653 723 00, Knurled Nut DIN 466, M3

Product No. Steel	Product No. Stainless	d_1 mm	d_2 mm	d_3 mm	h mm	k mm	Weight g
653 723 00	-	M3	12	6	7,5	2,5	3
653 724 00	**653 997 24**	M4	16	8	9,5	3,5	7
653 725 00	**653 997 25**	M5	20	10	11,5	4	13
653 726 00	**653 997 26**	M6	24	12	15	5	23
653 728 00	**653 997 28**	M8	30	16	18	6	44
653 730 00	**653 997 30**	M10	36	20	23	8	84
653 732 00	-	M12*	40	22	25	10	118

* Not part of the DIN.

Flat Knurled Nuts DIN 467, Steel and Stainless Steel

Material: Steel, tensile strength 5,
visible face precision turned, burnished.

Material: Stainless steel 1.4305,
visible face precision turned, sand blasted,
matt finish.

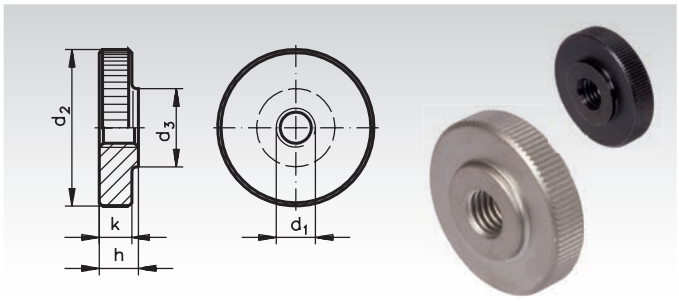

Ordering Details: e.g.: Product No. 653 743 00, Flat Knurled Nuts DIN 466, M3

Product No. Steel	Product No. Stainless	d_1 mm	d_2 mm	d_3 mm	h mm	k mm	Weight g
653 743 00	-	M3	12	6	3	2,5	2
653 744 00	**653 997 44**	M4	16	8	4	3,5	5
653 745 00	**653 997 45**	M5	20	10	5	4	10
653 746 00	**653 997 46**	M6	24	12	6	5	18
653 748 00	**653 997 48**	M8	30	16	8	6	35
653 750 00	**653 997 50**	M10	36	20	10	8	61
653 752 00	-	M12*	40	22	12	10	92

* Not part of the DIN.

Knurled Nuts DIN 6303, Steel and Stainless Steel

Material: Steel, burnished.

Material: Stainless steel 1.4305

Without pin hole.

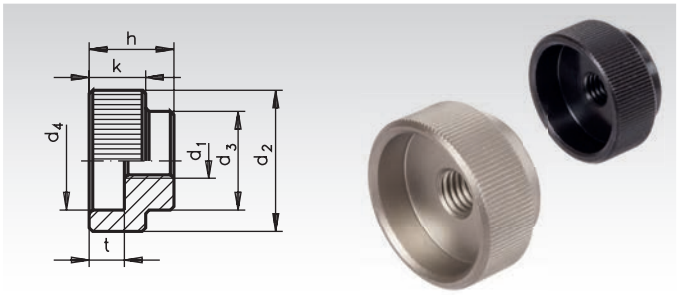

Ordering Details: e.g.: Product No. 653 705 00, Knurled Nut DIN 6303, M5

Product No. Steel	Product No. Stainless	d_1 mm	d_2 mm	d_3 mm	d_4 mm	h mm	k mm	t mm	Weight g
653 705 00	**653 997 05**	M5	20	14	15	12	8	5	15
653 706 00	**653 997 06**	M6	24	16	18	14	10	6	27
653 708 00	**653 997 08**	M8	30	20	24	17	12	7	40
653 710 00	**653 997 10**	M10	36	28	30	20	14	8	85
653 712 00	**653 997 12**	M12	40	32	34	24	16	10	132

Hollow Knurled Nuts 420

Material:
Type Steel:
Head: Plastic thermoplast (polyamide) black, glossy.
Bush: Steel, zinc plated, chromatised blue.

Type Stainless Steel:
Head: Plastic thermoplast (polyamide) black, glossy.
Bush: Stainless steel 1.4305.

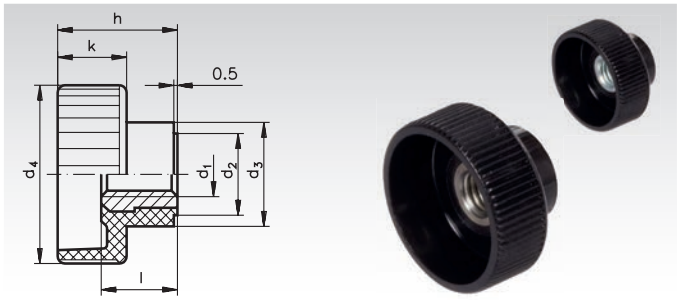

Ordering Details: e.g.: Product No. 653 754 00, Knurled Nut M 4

Product No. steel	Product No. stainless	d_1 mm	d_2 mm	d_3 mm	d_4 mm	h mm	k mm	l mm	Weight g
653 754 00	-	M4	9	12	19	14	8	9	4
653 755 00	**653 997 55**	M5	9	12	19	14	8	9	4
653 756 00	**653 997 56**	M6	11	14	24	16,5	9,5	10,5	7
653 758 00	**653 997 58**	M8	13	16	30	19,5	11	11,5	10
653 760 00	-	M10	15	18	36	22,5	12,5	14	16

Knurled Thumb Screws 421

Material:
Type with threaded bolt of steel:
Head: Plastic thermoplast (polyamide) black, glossy.
Threaded bolt: Steel, zinc plated, chromatised blue.

Type with threaded bolt of stainless steel:
Head: Plastic thermoplast (polyamide) black, glossy.
Threaded bolt: Stainless steel 1.4567.

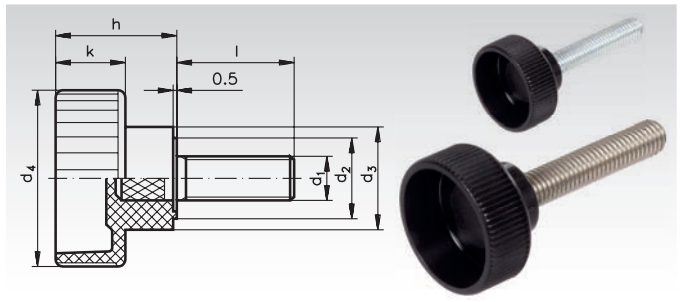

Ordering Details: e.g.: Product No. 653 770 00, Knurled Thumb Screw M4 x 10

Product No. steel	Product No. stainless	d_1 mm	Length l mm	d_2 mm	d_3 mm	d_4 mm	h mm	k mm	Weight g
653 770 00	-	M4	10	9	12	19	14	8	6
653 772 00	-	M4	15	9	12	19	14	8	6
653 774 00	-	M4	20	9	12	19	14	8	6
653 775 00	-	M4	30	9	12	19	14	8	7
653 776 00	**653 997 76**	M5	10	9	12	19	14	8	7
653 778 00	**653 997 78**	M5	15	9	12	19	14	8	7
653 780 00	**653 997 80**	M5	20	9	12	19	14	8	7
653 781 00	**653 997 81**	M5	25	9	12	19	14	8	8
653 782 00	**653 997 82**	M6	16	11	14	24	16,5	9,5	8
653 784 00	**653 997 84**	M6	20	11	14	24	16,5	9,5	12
653 786 00	**653 997 86**	M6	25	11	14	24	16,5	9,5	13
653 787 00	**653 997 87**	M6	30	11	14	24	16,5	9,5	10
653 788 00	-	M8	16	13	16	30	19,5	11	17
653 790 00	**653 997 90**	M8	20	13	16	30	19,5	11	18
653 792 00	**653 997 92**	M8	30	13	16	30	19,5	11	24
653 793 00	**653 997 93**	M8	40	13	16	30	19,5	11	20
653 794 00	**653 997 94**	M10	20	15	18	36	22,5	12,5	30
653 795 00	**653 997 95**	M10	25	15	18	36	22,5	12,5	33
653 796 00	**653 997 96**	M10	30	15	18	36	22,5	12,5	35
653 798 00	-	M10	40	15	18	36	22,5	12,5	40
-	**653 997 99**	M10	55	15	18	36	22,5	12,5	48

Loctite thread locking and bonding products page 811.

Knurled Thumb Screws DIN 464, Burnished Steel and Stainless Steel

Material: Steel burnished, tensile strength 5.8.

Material: Stainless steel 1.4305.

Visible face precision turned.

Contrary to the standards sheet, all knurled screws are produced from one piece and threaded over their full length.

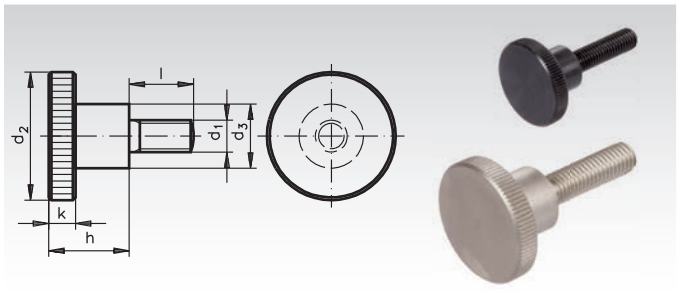

Ordering Details: e.g.: Product No. 654 205 00, Knurled Screw DIN 464, M4 x 8

Product No. Steel 5.8	Product No. stainless	d_1 mm	l mm	d_2 mm	d_3 mm	h mm	k mm	Weight g
654 205 00	**654 992 05**	M4	8	16	8	9,5	3,5	9
654 206 00	**654 992 06**	M4	10	16	8	9,5	3,5	9
654 207 00	**654 992 07**	M4	12	16	8	9,5	3,5	10
654 208 00	**654 992 08**	M4	16	16	8	9,5	3,5	10
654 212 00	**654 992 12**	M5	10	20	10	11,5	4	12
654 214 00	**654 992 14**	M5	16	20	10	11,5	4	16
654 216 00	**654 992 16**	M5	20	20	10	11,5	4	16
654 218 00	-	M6	10	24	12	15	5	28
654 220 00	**654 992 20**	M6	16	24	12	15	5	29
654 221 00	**654 992 21**	M6	20	24	12	15	5	30
654 222 00	**654 992 22**	M6	25	24	12	15	5	31
654 224 00	**654 992 24**	M8	16	30	16	18	6	56
654 225 00	**654 992 25**	M8	20	30	16	18	6	60
654 227 00	**654 992 27**	M8	30	30	16	18	6	61
654 229 00	-	M10	20	36	20	23	8	108
654 231 00	-	M10	30	36	20	23	8	113
654 232 00	-	M10	40	36	20	23	8	118

Knurled Thumb Screws DIN 653, Burnished Steel and Stainless Steel

Material: Steel burnished, tensile strength 5.8.

Material: Stainless steel 1.4305.

Visible face precision turned.
Produced from one piece and threaded over their full length (DIN designation A).

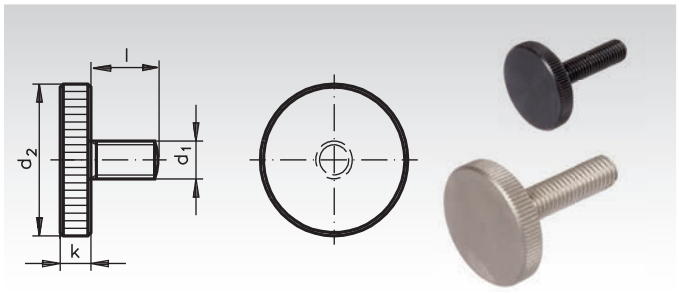

Ordering Details: e.g.: Product No. 654 233 05, Knurled Screw DIN 653, M3 x 6

Product No. Steel 5.8	Product No. Stainless	d_1 mm	l mm	d_2 mm	k mm	Weight g
654 233 05	-	M3	6	12	2,5	2,3
654 233 06	-	M3	8	12	2,5	2,4
654 233 07	-	M3	10	12	2,5	2,5
654 233 08	-	M3	16	12	2,5	2,7
654 233 10	**654 234 10**	M4	8	16	3,5	5,6
654 233 11	**654 234 11**	M4	10	16	3,5	5,7
654 233 12	**654 234 12**	M4	12	16	3,5	6,1
654 233 13	**654 234 13**	M4	16	16	3,5	6,2
654 233 14	-	M4	20	16	3,5	6,6
654 233 16	**654 234 16**	M5	10	20	4	10
654 233 17	**654 234 17**	M5	12	20	4	11
654 233 18	**654 234 18**	M5	16	20	4	12
654 233 19	**654 234 19**	M5	20	20	4	13
654 233 20	-	M5	25	20	4	14
654 233 22	**654 234 22**	M6	12	24	5	18
654 233 23	**654 234 23**	M6	16	24	5	20
654 233 24	**654 234 24**	M6	20	24	5	22
654 233 25	**654 234 25**	M6	25	24	5	24
654 233 26	-	M6	30	24	5	26
654 233 28	**654 234 28**	M8	16	30	6	33
654 233 29	**654 234 29**	M8	20	30	6	37
654 233 30	**654 234 30**	M8	25	30	6	39
654 233 31	**654 234 31**	M8	30	30	6	41
654 233 33	-	M8	40	30	6	44
654 233 34	**654 234 34**	M10	20	36	8	68
654 233 35	**654 234 35**	M10	25	36	8	72
654 233 36	**654 234 36**	M10	30	36	8	76
654 233 38	**654 234 38**	M10	40	36	8	80

Swing Bolts similar to DIN 444, Burnished Steel and Stainless Steel

Material: Steel burnished, tensile strength 5.8.

Material: Stainless steel 1.4305.

Precision made, thread rolled.
Contrary to the standards sheet the burnished steel version has a higher tensile strength (5.8 instead of 4.6 / 5.6) and the thread length l_2 is larger at both versions.
The stainless steel version is not part of the DIN.

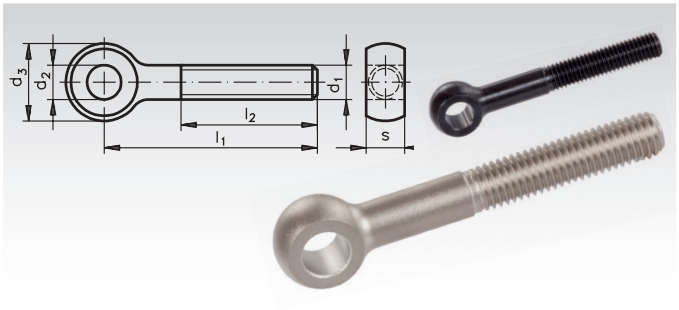

Ordering Details: e.g.: Product No. 654 406 00, Swing Bolt DIN 444, M6

Product No. Steel 5.8	Product No. stainless	d_1 mm	l_1 mm	l_2 mm	d_2^{H7} mm	d_3 mm	$s^{-0,2}$ mm	Weight g
654 404 00	**654 994 04**	M5	50	32	5	12	6	9
654 405 00	**654 994 05**	M5	75	32	5	12	6	13
654 406 00	**654 994 06**	M6	50	32	6	14	7	14
654 407 00	**654 994 07**	M6	75	32	6	14	7	20
654 410 00	**654 994 10**	M8	50	32	8	18	9	26
654 411 00	**654 994 11**	M8	75	32	8	18	9	36
654 414 00	**654 994 14**	M10	50	40	10	20	12	38
654 415 00	**654 994 15**	M10	75	40	10	20	12	52
654 416 00	**654 994 16**	M10	100	40	10	20	12	68
654 418 00	**654 994 18**	M12	75	40	12	25	14	80
654 420 00	**654 994 20**	M12	100	40	12	25	14	98
654 421 00	**654 994 21**	M12	130	40	12	25	14	120
654 424 00	**654 994 24**	M16	75	50	16	32	17	146
654 425 00	**654 994 25**	M16	100	50	16	32	17	183
654 426 00	**654 994 26**	M16	130	50	16	32	17	220
654 428 00	**654 994 28**	M20	100	63	18	40	22	305
654 429 00	**654 994 29**	M20	130	63	18	40	22	366
654 430 00	**654 994 30**	M20	160	63	18	40	22	438

Spherical Washers DIN 6319

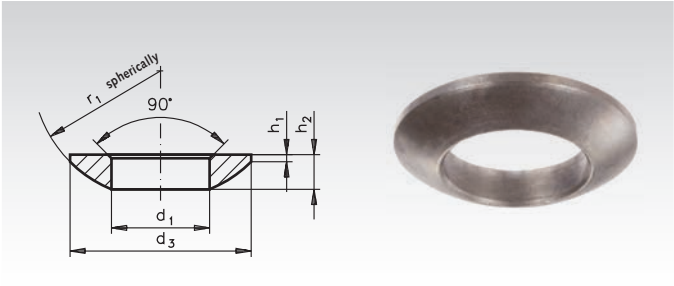

Material: Steel, blank, turned, case hardened, hardening depth min. 0.2 mm.

Ordering Details: e.g.: Product No. 655 406 00, Spherical Washer DIN 6319, 6.4 mm

Product No. Type C	d_1^{H13} mm	d_3 mm	h_1 mm	h_2 mm	r_1 mm	for Bolt Ø	F* kN	Weight g
655 406 00	6,4	12	0,7	2,3	9	6	9	0,9
655 408 00	8,4	17	0,6	3,2	12	8	17	2,5
655 410 00	10,5	21	0,8	4,0	15	10	26	5
655 412 00	13	24	1,1	4,6	17	12	38	7,3
655 414 00	15	28	1,2	5,0	22	14	53	11,4
655 416 00	17	30	1,3	5,3	22	16	73	12,7
655 420 00	21	36	2,0	6,3	27	20	117	22
655 424 00	25	44	2,4	8,2	32	24	168	43
655 430 00	31	56	3,6	11,2	41	30	269	102
655 436 00	37	68	4,6	14,0	50	36	394	190
655 440 00	43	78	6,5	17,0	58	42	542	305
655 448 00	50	92	8,0	21,0	67	48	714	540

* Max. statical load.

Conical Seats DIN 6319

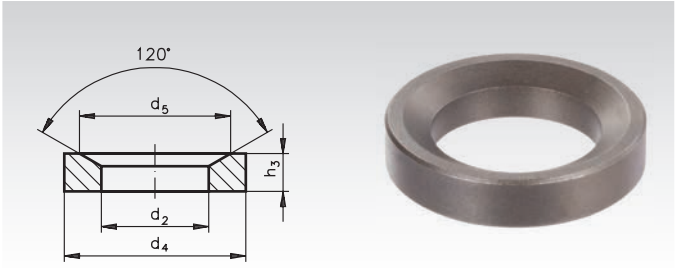

Material: Steel, blank, turned, case hardened, hardening depth min. 0.2 mm.

Ordering Details: e.g.: Product No. 655 506 00, Conical Seat DIN 6319, 7.1 mm

Product No. Type D	d_2^{H13} mm	d_4 mm	d_5 mm	h_3 mm	h_4** mm	for Bolt Ø	F* kN	Weight g
655 506 00	7,1	12	11	2,8	4	6	9	1,3
655 508 00	9,6	17	14,5	3,5	5	8	17	3,5
655 510 00	12	21	18,5	4,2	6,3	10	26	6,7
655 512 00	14,2	24	20	5	8	12	38	10
655 514 00	16,5	28	24,8	5,6	8,6	14	53	14,4
655 516 00	19	30	26	6,2	9,3	16	73	18
655 520 00	23,2	36	31	7,5	11,5	20	117	31
655 524 00	28	44	37	9,5	15	24	168	61
655 530 00	35	56	49	12	19,7	30	269	130
655 536 00	42	68	60	15	23	36	394	230
655 540 00	49	78	70	18	29	42	542	360
655 548 00	56	92	82	22	36	48	714	640

** Total height, together with spherical washer.

Spherical Washers DIN 6319 of Stainless Steel

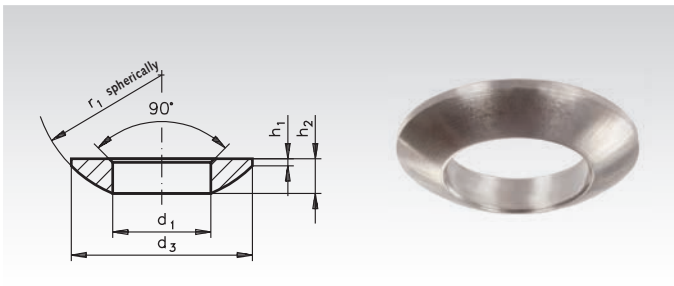

Material: 1.4305.

Ordering Details e.g.: Product No. 655 994 06, Spherical Washer DIN 6319, 6.4 mm, stainless

Product No. Type C	d_1^{H13} mm	d_3 mm	h_1 mm	h_2 mm	r_1 mm	for Bolt Ø	Weight g
655 994 06	6,4	12	0,7	2,3	9	6	0,9
655 994 08	8,4	17	0,6	3,2	12	8	2,5
655 994 10	10,5	21	0,8	4	15	10	5
655 994 12	13	24	1,1	4,6	17	12	7,3
655 994 16	17	30	1,3	5,3	22	16	12,7
655 994 20	21	36	2	6,3	27	20	22
655 994 24	25	44	2,4	8,2	32	24	43
655 994 30	31	56	3,6	11,2	41	30	102

Conical Seats DIN 6319 of Stainless Steel

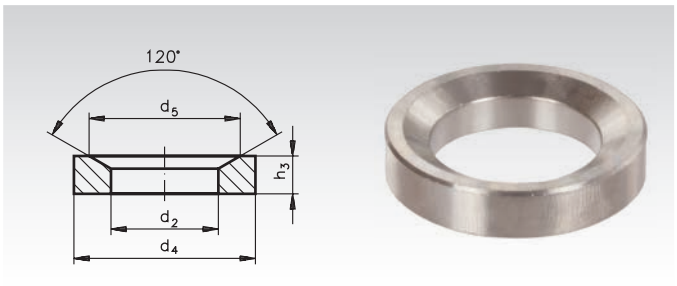

Material: 1.4305.

Ordering Details e.g.: Product No. 655 995 06, Conical Seat DIN 6319, 7.1 mm, stainless

Product No. Type D	d_2^{H13} mm	d_4 mm	d_5 mm	h_3 mm	for Bolt Ø	Weight g
655 995 06	7,1	12	11	2,8	6	1,3
655 995 08	9,6	17	14,5	3,5	8	3,5
655 995 10	12	21	18,5	4,2	10	6,7
655 995 12	14,2	24	20	5	12	10
655 995 16	19	30	26	6,2	16	18
655 995 20	23,2	36	31	7,5	20	31
655 995 24	28	44	37	9,5	24	61
655 995 30	35	56	49	12	30	130

Ball-Ended Thrust Screws

Material typ A and typ B: Screw: Steel tensile strength 12.9, burnished. Ball: Steel, hardened, blank.

Material typ A-N and typ B-N: Screw: Stainless steel 1.4305. Ball: Stainless steel, hardened.

Type A / A-N: with full ball.
Type B / B-N: with flat-faced ball, to clamp surfaces that are not exactly parallel.

Temperature range: -60°C to +350°C.

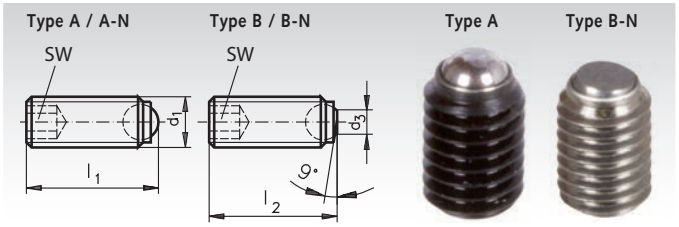

Ordering Details: e.g.: Product No. 654 503 05, Ball-Ended Thrust Screw M3 x 5mm

Product No. Type A	Product No. Type B	Product No. Type A-N	Product No. Type B-N	d_1 mm	Nominal length mm	d_3 mm	l_1 mm	l_2 mm	Ball Ø mm	SW mm	kN*	Weight g
654 503 05	-	**654 903 05**	-	M3	5	-	5	-	1,5	1,5	2,5	0,15
654 503 08	-	**654 903 08**	-	M3	8	-	7,5	-	1,5	1,5	2,5	0,22
654 503 10	-	**654 903 10**	-	M3	10	-	10	-	1,5	1,5	2,5	0,33
654 504 06	**654 554 06**	**654 904 06**	**654 954 06**	M4	6	1,8	6	5,6	2,5	2	3,5	0,4
654 504 10	**654 554 10**	**654 904 10**	**654 954 10**	M4	10	1,8	10	9,6	2,5	2	3,5	0,7
654 504 16	**654 554 16**	**654 904 16**	**654 954 16**	M4	16	1,8	16	15,6	2,5	2	3,5	1,1
654 505 08	**654 555 08**	**654 905 08**	**654 955 08**	M5	8	2,2	8	7,5	3	2,5	4,5	0,8
654 505 12	**654 555 12**	**654 905 12**	**654 955 12**	M5	12	2,2	12	11,5	3	2,5	4,5	1,3
654 505 20	**654 555 20**	**654 905 20**	**654 955 20**	M5	20	2,2	20	19,5	3	2,5	4,5	2,3
654 506 10	**654 556 10**	**654 906 10**	**654 956 10**	M6	10	3	10,8	10	4	3	9	1,5
654 506 16	**654 556 16**	**654 906 16**	**654 956 16**	M6	16	3	16,8	16	4	3	9	2,4
654 506 25	**654 556 25**	**654 906 25**	**654 956 25**	M6	25	3	25,8	25	4	3	9	3,9
654 508 10	**654 558 10**	**654 908 10**	**654 958 10**	M8	10	5	11,2	10	5,5	4	15	2,6
654 508 12	**654 558 12**	**654 908 12**	**654 958 12**	M8	12	5	13,2	12	5,5	4	15	3,2
654 508 20	**654 558 20**	**654 908 20**	**654 958 20**	M8	20	5	21,2	20	5,5	4	15	5,7
654 508 30	**654 558 30**	**654 908 30**	**654 958 30**	M8	30	5	31,2	30	5,5	4	15	8,9
654 510 12	**654 560 12**	**654 910 12**	**654 960 12**	M10	12	6	13,7	12	7	5	20	5
654 510 16	**654 560 16**	**654 910 16**	**654 960 16**	M10	16	6	17,7	16	7	5	20	6,8
654 510 25	**654 560 25**	**654 910 25**	**654 960 25**	M10	25	6	26,7	25	7	5	20	11,2
654 510 35	**654 560 35**	**654 910 35**	**654 960 35**	M10	35	6	36,7	35	7	5	20	16,2
654 512 16	**654 562 16**	**654 912 16**	**654 962 16**	M12	16	7	18	16	8,5	6	30	10
654 512 20	**654 562 20**	**654 912 20**	**654 962 20**	M12	20	7	22	20	8,5	6	30	12,4
654 512 30	**654 562 30**	**654 912 30**	**654 962 30**	M12	30	7	32	30	8,5	6	30	19,6
654 512 40	**654 562 40**	**654 912 40**	**654 962 40**	M12	40	7	42	40	8,5	6	30	28,5
654 516 20	**654 566 20**	**654 916 20**	**654 966 20**	M16	20	11	23,3	20	12	8	60	22
654 516 25	**654 566 25**	**654 916 25**	**654 966 25**	M16	25	11	28,3	25	12	8	60	28
654 516 35	**654 566 35**	**654 916 35**	**654 966 35**	M16	35	11	38,3	35	12	8	60	41
654 516 50	**654 566 50**	**654 916 50**	**654 966 50**	M16	50	11	53,3	50	12	8	60	48
654 520 30	**654 570 30**	-	-	M20	30	13,5	34,2	30	15	10	90	52
654 520 40	**654 570 40**	-	-	M20	40	13,5	44,2	40	15	10	90	72
654 520 50	**654 570 50**	-	-	M20	50	13,5	54,2	50	15	10	90	93
654 520 60	**654 570 60**	-	-	M20	60	13,5	64,2	60	15	10	90	115

* Max. Load Capacity kN, only with static load, only type A and type B.

Thrust Screws with Brass Bolt

Material:
Screw: Steel, tensile strength 12.9, burnished.
Bolt: Brass.

Note: Brass bolt press-fitted. Used for gentle pressing-in or clamping of threaded spindles, axles, shafts and surface treated parts.

Temperature range: -60°C to +350°C.

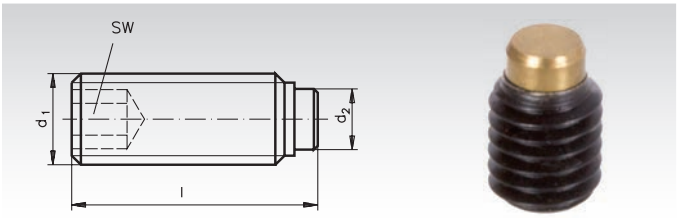

Ordering Details: e.g.: Product No. 654 604 06, Thrust Screw with Brass Bolt, M4 x 6.5

Product No.	d_1 mm	l mm	d_2 mm	SW mm	Weight g
654 604 06	M4	6,5	2,5	2	0,5
654 604 10	M4	10,5	2,5	2	0,8
654 605 08	M5	8,5	3	2,5	0,9
654 605 12	M5	12,5	3	2,5	1,4
654 606 11	M6	11,5	4	3	1,7
654 606 17	M6	17,5	4	3	2,5
654 608 12	M8	12	5,5	4	2,7
654 608 22	M8	22	5,5	4	6,1
654 610 14	M10	14	7	5	5,6
654 610 18	M10	18	7	5	7,2

Loctite thread locking and bonding products page 811.

Spring Plungers with Ball and Head, Steel or Stainless Steel

Material: **Type A:** Body: Steel, burnished.
Ball: Ball bearing steel, hardened.
Spring: Stainless steel.

Type AN: Body: Stainless steel.
Ball: Stainless steel.
Spring: Stainless steel.

STAINLESS

Used for fixation and to press something in or push it out.

Temperature: max. +250°C.

Ordering Details: e.g.: Product No. 654 634 00, Spring Plunger M4

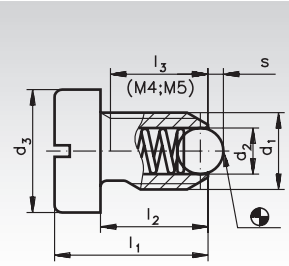

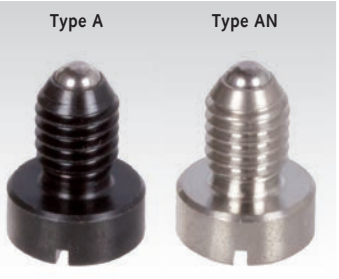

Product No. Type A	Product No. Type AN	d_1 mm	d_2 mm	d_3 mm	l_1 mm	l_2 mm	l_3 mm	S mm	Spring Tension* Initial N	Spring Tension* End N	Weight g
654 634 00	**654 996 34**	M4	2,5	6	9,5	6,5	5,0	0,8	8	14	1,0
654 635 00	**654 996 35**	M5	3,0	8	12,5	8,5	6,7	0,9	8	14	2,0
654 636 00	**654 996 36**	M6	3,5	10	14,0	9,0	-	1,0	11	18	3,7
654 638 00	**654 996 38**	M8	4,5	13	16,5	11,0	-	1,5	18	31	7,0
654 640 00	**654 996 40**	M10	6,0	16	20,0	14,0	-	2,0	24	45	13,2
654 642 00	**654 996 42**	M12	8,0	18	22,0	15,0	-	2,5	26	49	19,5

* Statistical average.

Spring Plungers with Ball and Slot, Burnished or Stainless Steel

Material:
Body: Steel, burnished. Ball: Hardened. Spring: Stainless steel.
Standard spring tension.
Material Type R:
Body: Stainless steel.
Ball: Stainless steel, hardened.
Spring: Stainless steel, standard spring tension.

STAINLESS

Temperature range: -40°C to +250°C.

Ordering Details: e.g.: Product No. 654 996 02, Spring Plunger Type R, M2

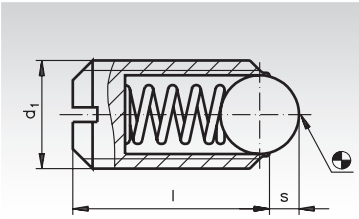



Product No. burnished	Product No. Type R	d_1 mm	l mm	s mm	Ball Ø mm	Spring Tension* Initial N	Spring Tension* End N	Weight g
-	**654 996 02**	M2	4	0,3	1,0	0,8	1,5	0,1
654 603 00	**654 996 03**	M3	7	0,4	1,5	3	4,5	0,3
654 604 00	**654 996 04**	M4	9	0,8	2,5	6	14,5	0,6
654 605 00	**654 996 05**	M5	12	0,9	3	8	14	0,9
654 606 00	**654 996 06**	M6	14	1,0	3,5	11	18	1,5
654 608 00	**654 996 08**	M8	16	1,5	4,5	18	31	3,5
654 610 00	**654 996 10**	M10	19	2,0	6	24	45	7
654 612 00	**654 996 12**	M12	22	2,5	8	26	49	10
654 616 00	**654 996 16**	M16	24	3,5	10	41	86	24
654 620 00	**654 996 20**	M20	30	4,5	12	56	111	43
654 624 00	**654 996 24**	M24	34	5,5	15	81	151	70

Note

These Spring Plungers are, e.g., used for fixation or as device to press something in or push it out.

* Statistical average.

Spring Plungers with Ball and Slot, Burnished or Stainless Steel, Strong Spring Tension

Material:
Body: Steel, burnished. Ball: Hardened. Spring: Stainless steel.
Strong spring tension.
Material Type R:
Body: Stainless steel.
Ball: Stainless steel, hardened.
Spring: Stainless steel, strong spring tension.

STAINLESS

Temperature range: -40°C to +250°C.

Ordering Details: e.g.: Product No. 654 805 00, Spring Plunger, M5

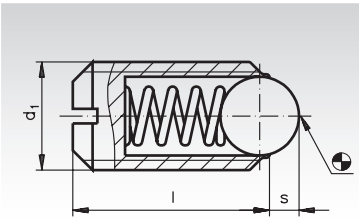



Product No. burnished	Product No. Type R	d_1 mm	l mm	s mm	Ball Ø mm	Spring Tension* Initial N	Spring Tension* End N	Weight g
654 805 00	**654 998 05**	M5	12	0,9	3	15	22	0,9
654 806 00	**654 998 06**	M6	14	1,0	3,5	19	28	1,5
654 808 00	**654 998 08**	M8	16	1,5	4,5	36	62	3,5
654 810 00	**654 998 10**	M10	19	2,0	6	57	104	7
654 812 00	**654 998 12**	M12	22	2,5	8	61	110	10
654 816 00	**654 998 16**	M16	24	3,5	10	68	142	24
654 820 00	**654 998 20**	M20	30	4,5	12	84	166	43
654 824 00	**654 998 24**	M24	34	5,5	15	127	237	70

Note

These Spring Plungers are, e.g., used for fixation or as device to press something in or push it out.

* Statistical average.

Spring Plungers, Plastic

Material:
Body: POM, blue. Ball made from hardened stainless steel or of POM, white. Spring: Stainless steel.

Type N: Ball made from stainless steel.
Type P: Ball made from POM.

Temperature range -30°C to +50°C.

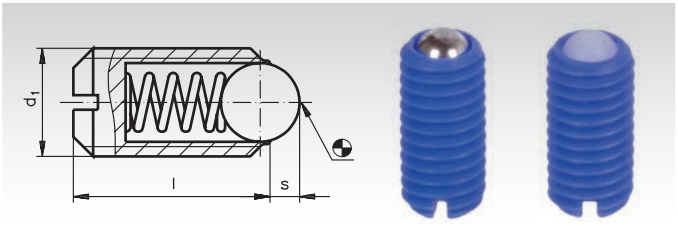

Ordering Details: e.g.: Product No. 654 726 00, Spring Plunger M6, Version P, Delrin

Product No. Version N	Product No. Version P	d_1 mm	l mm	s mm	Ball Ø mm	Spring Tension* Initial N	Spring Tension* End N	Weight g
654 706 00	654 726 00	M6	14	1	3,5	12	17	0,4
654 708 00	654 728 00	M8	16	1,5	5	20	35	1,1
654 710 00	654 730 00	M10	19	2	6	20	45	3,0

Note

These parts are used in applications where, e.g., electrical conductivity is not desired or in aggressive environments.

* Statistical average.

Spring Plungers with Ball and Internal Hexagon, Stainless

Material:
Body: Stainless Steel 1.4305.
Ball: Stainless steel, hardened.
Spring: Stainless steel.

Standard spring load.

Temperature range: -40°C to +250°C.

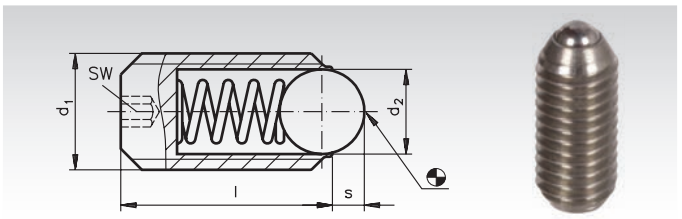

Ordering Details: e.g.: Product No. 654 999 06, Spring Plunger M6, Type KN Stainless

Product No.	d_1 mm	d_2 mm	l mm	s mm	WS mm	Spring Tension* Initial N	Spring Tension* End N	Weight g
654 999 06	M6	3,5	15	1	3	11	18	2
654 999 08	M8	4,5	18	1,5	4	18	31	4
654 999 10	M10	6	23	2	5	24	45	8
654 999 12	M12	8	26	2,5	6	26	49	12
654 999 16	M16	10	33	3,5	8	41	86	31
654 999 20	M20	12	43	4,5	10	66	111	64
654 999 24	M24	15	48	5,5	12	81	151	100

Note

Used for fixation or as device to press something in or push it out.

* Statistical average.

Spring Plungers with Internal Hexagon, Burnished or Stainless Steel

Material:
Body: Steel, burnished. Bolt: Steel, hardened. Spring: Stainless steel

Type "stainless": Stainless steel 1.4305.

Standard spring tension.

Temperature range: -40°C to +250°C.

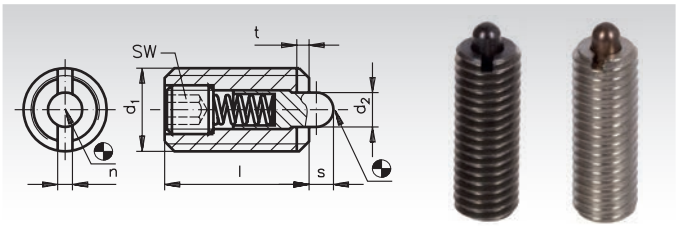

Ordering Details: e.g.: Product No. 654 653 00, Spring Plunger M 3

Product No. burnished	Product No. stainless	d_1 mm	d_2 mm	l mm	n mm	s mm	t mm	SW mm	Spring Tension* Initial N	Spring Tension* End N	Weight g
654 653 00	-	M3	1,0	12	0,4	1,0	0,5	0,7	2	4	0,4
654 654 00	654 996 54	M4	1,5	15	0,6	1,5	0,6	1,3	4,5	16	0,8
654 655 00	654 996 55	M5	2,4	18	1,2	2,3	0,8	1,5	6	19	1,3
654 656 00	654 996 56	M6	2,7	20	1,3	2,5	0,9	2	6	19	2,5
654 658 00	654 996 58	M8	3,5	22	1,5	3	1,4	2,5	10	39	6
654 660 00	654 996 60	M10	4	22	1,5	3	1,4	3	10	39	9
654 662 00	654 996 62	M12	6	28	2,7	4	2	4	12	53	16
654 666 00	654 996 66	M16	7,5	32	3,2	5	2,5	5	45	100	35
654 670 00	654 996 70	M20	10	40	3,7	7	3	6	52	125	65
654 674 00	-	M24	12	52	3,7	10	3	8	70	170	120

* Statistical average.

Note

Used for fixation or as device to press something in or push it out. The spring plungers can be mounted and demounted using the internal hexagon or the slot.

Spring Plungers, Smooth with Collar, Stainless

Material:
Type GN: Body, ball and spring stainless steel.
Type GP: Body: Plastic POM.
Ball and spring: Stainless steel.

Temperature range GN: -40°C to +250°C.
Temperature range GP: -30°C to +50°C.

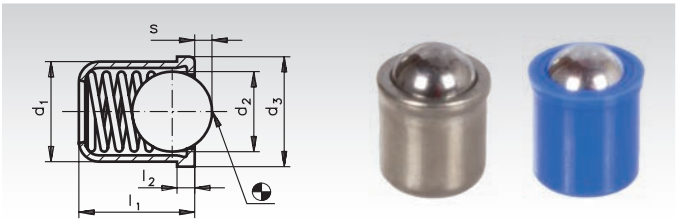

Ordering Details: e.g.: Product No. 654 997 53, Spring Plunger, Type GN, Stainless, 3mm

Product No. Type GN	Product No. Type GP	$d_1^{+0,08}$ mm	d_2 mm	d_3 mm	l_1 mm	$l_{2\ GN\ /\ GP}$ mm	$s_{GN\ /\ GP}$ mm	Spring Tension* GN Initial N	Spring Tension* GN F_2 N	Spring Tension* GP Initial N	Spring Tension* GP End N	Weight GN g	Weight GP g
654 997 53	**654 784 03**	3	2,38	3,5	4	0,75/0,6	0,7/0,55	1,8	3,5	1,7	3,5	0,20	0,09
654 997 54	**654 784 00**	4	3	4,6	5	0,9/1,0	1,0/0,8	2,5	6	2,5	6,5	0,35	0,20
654 997 55	**654 785 00**	5	4	5,6	6	0,9/1,0	1,4/1,0	3	6,5	4,5	9	0,60	0,40
654 997 56	**654 786 00**	6	5	6,5	7	1,0/1,0	1,8/1,6	5,5	11,5	6,5	13	1,00	0,70
654 997 58	**654 788 00**	8	6,5	8,5	9	1,1/1,0	1,9/1,9	7	12,5	8	18	2,20	1,50
654 997 60	**654 790 00**	10	8,5	11	13,5	1,7/1,5	3,3/2,4	8,5	18,5	12	23	5,30	3,1
654 997 62	**654 792 00**	12	10	13	16	2,3/1,5	4,0/3,3	12	26,5	13	25	7,80	5,8

* Statistical average.

Note

Spring plungers are used for fixation or as device to press something in or push it out.

Double-Ended Spring Plunger

Material:
Body: Brass.
Ball: Stainless steel, hardened.
Spring: Stainless steel.

Temperature range: -40°C to +250°C.

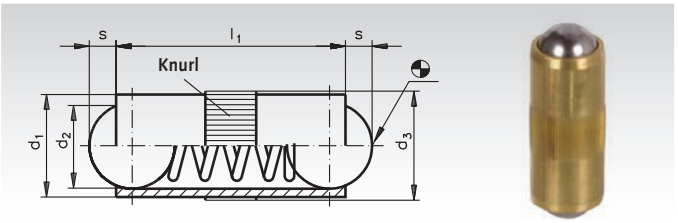

Ordering Details: e.g.: Product No. 654 843 00, Spring Plunger, Double-Ended 3 mm

Product No.	d_1 mm	d_2 mm	$d_3^{+0,5}$ mm	l_1 mm	s mm	Spring Tension* Initial N	Spring Tension* End N	Weight g
654 843 00	3	2,5	3,02	7,3	0,8	2	4,5	0,4
654 844 00	4	3	4,03	9	0,9	2,5	7,5	0,6
654 845 00	5	4	5,03	10,8	1,2	3,5	8	1,2
654 847 00	7	6	7,03	14	2	4	12	3,0
654 848 00	8	6,5	8,03	18	2,1	6	15	5,1

* Statistical average.

Note

To fix or secure axles and bolts and as electronic contact.

Spring-Action Side Thrust Pins 2214, Version A, Stainless Ball, Normal Spring Pressure, Single-Sided

Material:
Steel, burnished. Ball: Stainless steel, hardened.
Spring: Stainless steel.

Temperature range -30°C to +50°C.

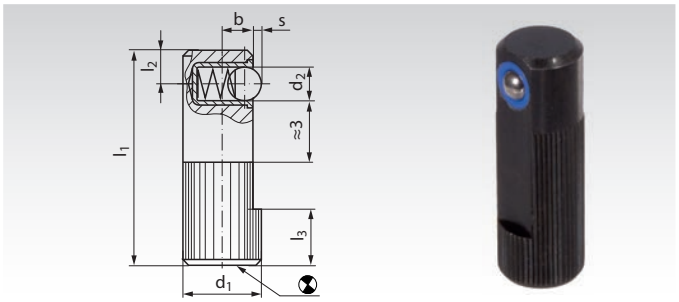

Ordering Details: e.g.: Product No. 654 928 00, Spring-Action Side Thrust Pin, Vers. A, 8mm

Product No. Version A	d_1 mm	d_2 mm	l_1 mm	l_2 mm	l_3 mm	b mm	s mm	Intake Bore mm^{H8}	Spring Load * Initial N	End N	Weight g
654 928 00	8	3	25	3,6	6	3,2	0,9	8	2,5	6,5	8,7
654 930 00	10	4	30	4,2	7	4	1	10	4,5	9	17
654 932 00	12	5	35	4,8	9	5	1,5	12	6,5	13	29
654 934 00	14	6,5	40	5,8	10	5,4	1,8	14	8	18	43

* Statistical average.

Note

The side thrust pin is pressed into the bore by at least as far as the measure l_3. It serves to position, hold or clamp small workpieces inside fixtures. If the workpiece is machined, additional clamping devices might be required for holding it safely in place.

Spring-Action Side Thrust Pins 2214, Version B, Steel Ball, Strong Spring Pressure, Single-Sided

Material:
Free cutting steel, burnished. Ball: Steel, hardened.
Spring: Plastic.

Temperature range -40°C to +80°C.

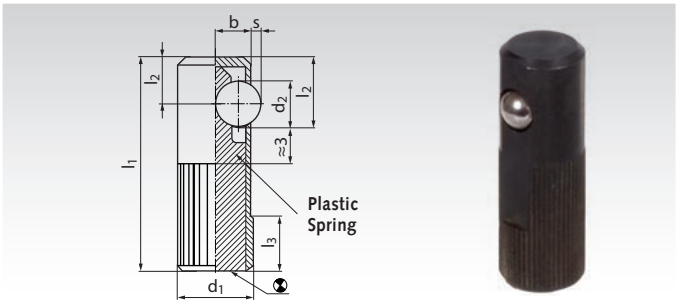

Ordering Details: e.g.: Product No. 654 950 00, Spring-Action Side Thrust Pin, Vers. B, 10mm

Product No. Version B	d_1 mm	d_2 mm	l_1 mm	l_2 mm	l_3 mm	b mm	s mm	Intake Bore mm^{H8}	Spring Load* Initial N	End N	Weight g
654 950 00	10	5,5	30	7	8	4,5	1	10	50	160	8,6
654 952 00	12	6,5	35	8	9	5,5	1,5	12	60	270	13

* Statistical average.

Note

The side thrust pin is pressed into the bore by at least as far as the measure l_3. It serves to position, hold or clamp small workpieces inside fixtures. If the workpiece is machined, additional clamping devices might be required for holding it safely in place. If fixtures are stored please make sure that the plastic spring is not loaded.



Cam-Action Indexing Plungers / Indexing Plungers



Cam-Action Indexing Plunger 612, Made from Steel and Stainless Steel

Page 532



Indexing Plunger 417

Page 533



Indexing Plunger 717, Made from Steel and Stainless Steel

Page 534



Indexing Plunger 817, Made from Steel and Stainless Steel

Page 536

Knobs / Grips



Control Knobs 726.1

Page 537



Star Grips DIN 6335 GG

Page 538



Star Grips Similar to DIN 6335 Pr

Page 538



Star Grips with Axial Bearing

Page 538



Star Grip Screws with Axial Bearing

Page 538



Star Grips DIN 6336 GG

Page 538



Star Grips Similar to DIN 6336 Pr

Page 539



Star Grips Similar to DIN 6336 AL

Page 539



Star Grips 5335 Stainless Steel

Page 539



Star Grips 5334 Stainless Steel

Page 540



Star Grip Screws 5334 Stainless Steel

Page 540



Star Grips Similar to DIN 6336, Made From Thermoplastics

Page 541



Star Grip Screws Similar to DIN 6336

Page 541



Triangular Knobs, Made from Plastic

Page 542



Triangular Knob Screws, Made from Plastic

Page 542



Knurled Knobs, Made from Plastic

Page 543



Knurled Knob Screws, Made from Plastic

Page 543



Triangular Knobs, Made from Stainless Steel

Page 542



Wing Nuts, Plastic

Page 544



Wing screws, Plastic

Page 544

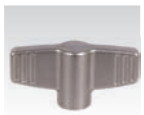

Wing Nuts, Stainless Steel

Page 544



Wing screws, Stainless Steel

Page 544



Ball Knobs DIN 319 Pr Plastic

Page 545



Ball Knobs Similar to DIN 319, Metal

Page 545



Revolving Ball Knobs 3192

Page 546

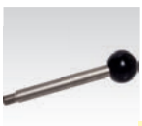

Gear Lever Handles 209 with Ball Knob DIN 319, Steel Zinc Plated or Stainless

Page 546

Knobs / Grips


Revolving Cylindrical Grips 598
Page 547


Retractable Handles NG
Page 547


Cylindrical Knobs, Press-on Type
Page 547


Gear Lever Handles 209 with Cylindrical Grip, Steel, Burnished or Zinc Plated or Stainless
Page 546


Fixed Handles DIN 39 St and DIN 39 AL
Page 548


Fixed Handles DIN 39 Pr
Page 548


Revolving Handles DIN 98 St and DIN 98 AL
Page 549


Revolving Handles DIN 98 Pr
Page 549

Clamping Levers


Adjustable Clamping Levers 355 from Plastic
Page 550


Adjustable Clamping Levers 355 from Plastic with Screw
Page 550


Adjustable Clamping Levers 120
Page 551


Adjustable Clamping Levers 120 with Screw
Page 551


Adjustable Clamping Levers 300, Disengaged by Pulling
Page 552


Adjustable Clamping Levers 300, with External Thread, Disengaged by Pulling
Page 552


Adjustable Clamping Levers 300.5 Stainless
Page 553


Adjustable Clamping Levers 300.5, with External Thread, Stainless
Page 553


Eccentric Clamps Version A and B
Page 554


Eccentric Clamps Version A and B, with External Thread
Page 554

Clamp Nuts


Clamp Nuts DIN 99 St Made From Steel or Stainless Steel
Page 555


Adjustable Clamp Nuts 119 St
Page 555

Control Levers


Control Levers 223 St
Page 557


Control Levers with Long Hub 2120 St
Page 557

Clamp Nuts


Clamp Nuts 202 Tg Cast Steel and Stainless Steel
Page 555


Cylindrical Clamp Nuts, Steel or Stainless Steel
Page 556


Clamp Nuts with Double Lever, Steel or Stainless Steel
Page 556

Cabinet "U" Handles / Arch Handles / Folding Handles


Cabinet "U" Handles 525and 725 made From Polyamide or Polypropylene
Page 558


Cabinet "U" Handles 528 made From Polyamide or Polypropylene
Page 558


Cabinet "U" Handles 565
Page 559


Cabinet "U" Handles 565.1
Page 559


Cabinet "U" Handles 565.2
Page 559


Cabinet "U" Handles 426 / 426.1
Page 560


Arch handles
Page 560


Cabinet "U" Handles 425, Chrome plated or Stainless Steel
Page 561


Folding Handles Made From Steel or Stainless Steel
Page 561


Folding Handle with Recessed Tray 425.4
Page 561


Tubular Handles with Inclined Feet, Aluminium
Page 562


Tubular Handles with Straight Feet, Aluminium and Stainless Steel
Page 562

Cranks / Handwheels


Tri-Ball Handles 2140
Page 563


Hand Cranks DIN 468 Tg
Page 563


Hand Cranks DIN 469 Tg
Page 563


Hand Cranks 471
Page 564


Hand Cranks 569
Page 564


Turret Levers 2130 St
Page 564


Handwheels, Stainless Steel
Page 565


Handwheels, Stainless Steel, solid version
Page 565


Handwheels, Stainless Steel, solid version similar to DIN 950
Page 565


Handwheels 527.1 with Peripheral Grooves, Plastic
Page 566


Spoked Handwheels 522, with Revolving Cylindrical Handle, Plastic
Page 566


Retractable-Handle Handwheels 5223, Plastic
Page 566


Spoked Handwheels DIN 950, Grey Cast
Page 567


Spoked Handwheels DIN 950, Grey Cast, with Square Hole
Page 567


Spoked Handwheels DIN 950, Aluminium
Page 568


Solid-Disk Handwheels, Similar to DIN 950, Aluminium
Page 568


Solid-Disk Handwheels DIN 3670, with Recessed Grips, Aluminium
Page 569


Solid-Disk Handwheels 323, Aluminium
Page 569


Retractable-Handle Handwheels 3223, Aluminium
Page 569


Spoked Handwheels 320, Aluminium
Page 570


Solid-Disk Handwheels 326, Aluminium
Page 570


Safety Handwheels SHR, Aluminium
Page 570

Lifting Pins / Socket Pins with Spring Loaded Balls


Lifting Pins, Self-Locking
Page 571


Socket Pins with Spring-Loaded Balls, Self-Locking
Page 571

Latch Clamps / Quick Clamps


Latch Clamps Zinc Plated Steel and Stainless Steel
Page 572


Quick Clamps
Page 573




Reworking within 24h-service possible. Custom made parts on request.

Cam-Action Indexing Plungers 612 Made from Steel

Material: Steel, burnished, cam-action indexing plunger precision turned and nitrided. Cap: Plastic Thermoplast (polyamide) black, matt finish.

Note: cam-action indexing plungers are used if the plunger pin sometimes needs to be retracted, i.e must not stick out. Turning the indexing plunger by 180° causes the plunger pin to retract. There is a notched catch to ensure the plunger can be locked in both positions.

Version A: without counter nut, without plastic cap.
Version B: without counter nut, with plastic cap.
Version AK: with counter nut, without plastic cap.
Version BK: with counter nut, with plastic cap.

Ordering Details: e.g.: Product No. 666 773 00, Indexing Plunger 612, Version A, 5 mm

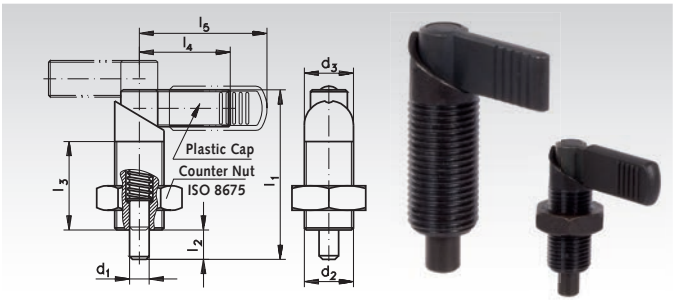

Product No. Version A	Product No. Version B	Product No. Version AK	Product No. Version BK	d_1 -0,02/-0,04 mm	d_2 mm	d_3 mm	l_1 mm	l_2 mm	$l_3^{+1,5}$ mm	l_4 mm	l_5 mm	Spring Load* Initial N	Spring Load* End N	Weight g
666 773 00	**666 783 00**	**666 873 00**	**666 883 00**	5	M12 x 1,5	12	47	8	26	26	32	9	21	39
666 774 00	**666 784 00**	**666 874 00**	**666 884 00**	6	M12 x 1,5	12	47	8	26	26	32	9	21	39
666 775 00	**666 785 00**	**666 875 00**	**666 885 00**	6	M16 x 1,5	16	56	10	30	32	42	12	32	59
666 776 00	**666 786 00**	**666 876 00**	**666 886 00**	8	M12 x 1,5	12	47	8	26	26	32	9	21	39
666 777 00	**666 787 00**	**666 877 00**	**666 887 00**	8	M16 x 1,5	16	56	10	30	32	42	12	32	79
666 778 00	**666 788 00**	**666 878 00**	**666 888 00**	8	M20 x 1,5	20	69	12	36	37	52	21	57	115
666 779 00	**666 789 00**	**666 879 00**	**666 889 00**	10	M16 x 1,5	16	56	10	30	32	42	12	32	64
666 780 00	**666 790 00**	**666 880 00**	**666 890 00**	10	M20 x 1,5	20	69	12	36	37	52	21	57	119
666 782 00	**666 792 00**	**666 882 00**	**666 892 00**	12	M20 x 1,5	20	69	12	36	37	52	21	57	125

* Statistical average.

Cam-Action Indexing Plungers 612 Stainless Steel

Material: Stainless steel 1.4305/1.4404. Tension spring: 1.4310. Plunger pin ground.
Cap: Plastic Thermoplast (polyamide) black, matt finish.

STAINLESS

Note: cam-action indexing plungers are used if the plunger pin sometimes needs to be retracted, i.e must not stick out. Turning the indexing plunger by 180° causes the plunger pin to retract. There is a notched catch to ensure the plunger can be locked in both positions.

Version A-N: without counter nut, without plastic cap.
Version B-N: without counter nut, with plastic cap.
Version AK-N: with counter nut, without plastic cap.
Version BK-N: with counter nut, with plastic cap.

Ordering Details: e.g.: Product No. 666 997 73, Indexing Plunger 612, Version A-N, 5 mm

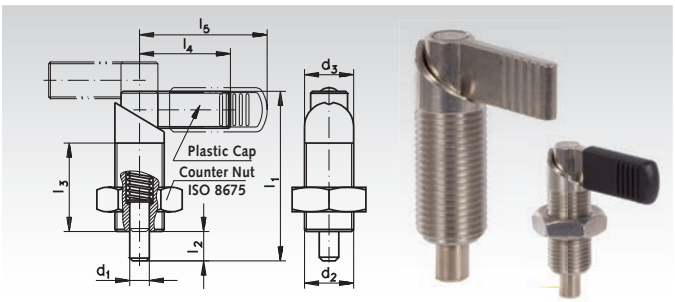

Product No. Version A-N	Product No. Version B-N	Product No. Version AK	Product No. Version BK-N	d_1 -0,02/-0,04 mm	d_2 mm	d_3 mm	l_1 mm	l_2 mm	l_3 mm	l_4 mm	l_5 mm	Spring Load* Initial N	Spring Load* End N	Weight g
666 997 73	**666 997 83**	**666 998 73**	**666 998 83**	5	M12 x 1,5	12	47	8	26	26	32	9	21	39
666 997 74	**666 997 84**	**666 998 74**	**666 998 84**	6	M12 x 1,5	12	47	8	26	26	32	9	21	39
666 997 75	**666 997 85**	**666 998 75**	**666 998 85**	6	M16 x 1,5	16	56	10	30	32	42	12	32	59
666 997 76	**666 997 86**	**666 998 76**	**666 998 86**	8	M12 x 1,5	12	47	8	26	26	32	9	21	39
666 997 77	**666 997 87**	**666 998 77**	**666 998 87**	8	M16 x 1,5	16	56	10	30	32	42	12	32	79
666 997 78	**666 997 88**	**666 998 78**	**666 998 88**	8	M20 x 1,5	20	69	12	36	37	52	21	57	115
666 997 79	**666 997 89**	**666 998 79**	**666 998 89**	10	M16 x 1,5	16	56	10	30	32	42	12	32	64
666 997 80	**666 997 90**	**666 998 80**	**666 998 90**	10	M20 x 1,5	20	69	12	36	37	52	21	57	119
666 997 82	**666 997 92**	**666 998 82**	**666 998 92**	12	M20 x 1,5	20	69	12	36	37	52	21	57	125

* Statistical average.

Loctite thread locking and bonding products page 811.

Indexing Plungers 417, without Rest Position

Material: Housing zinc die-cast, plastic coated black, textured finish. Plunger pin: Stainless steel 1.4305. Spring and lifting ring (type A): Stainless steel 1.4310. Knob (type B): Plastic (Polyamide PA) black, matt finish, not removable.

Indexing Plungers without rest position are used where, on releasing the knob or lifting ring, the plunger pin should be returned to its initial position by the spring force.

Type A: without rest position, with lifting ring.

Type B: without rest position, with knob.

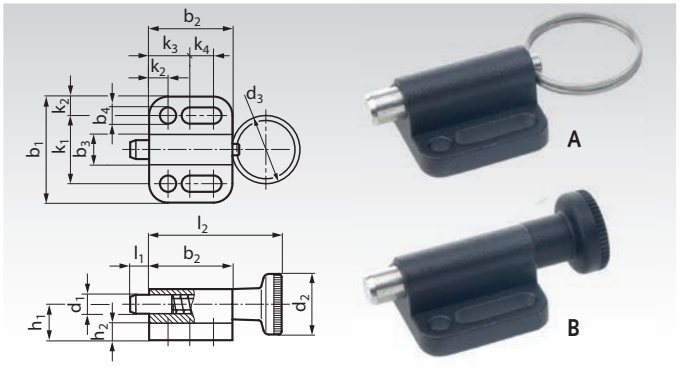

Ordering Details: e.g.: Product No. 666 680 04, Indexing Plunger 417 type A, 4mm

Product No.	Type	d_1 mm	d_2 mm	d_3 mm	b_1 mm	b_2 mm	b_3 mm	b_4 mm	h_1 mm	h_2 mm	k_1 mm	k_2 mm	k_3 mm	k_4 mm	l_1 mm	l_2 mm	Spring Load* Initial N	Spring Load* End N	Weight g
666 680 04	A	4	-	14	22	16,5	6	3,3	7,0	4	14	4	8	4,5	4	-	3	12	11
666 680 05	A	5	-	18	28	22	8	4,3	9,5	4,5	18	5	10	7	5	-	5	24	22
666 680 06	A	6	-	24	32	27,5	10	5,4	10,5	5	21	5,5	12	10	6	-	5	21	36
666 680 08	A	8	-	30	34	33	12	5,4	12,5	6	23	5,5	12	15,5	8	-	6	22	58
666 680 10	A	10	-	30	39	35	14,5	6,5	14,5	6	27	6	15	13,5	10	-	4	25	83
666 681 04	B	4	12	-	22	16,5	6	3,3	7,0	4	14	4	8	4,5	4	26,5	3	12	11
666 681 05	B	5	16	-	28	22	8	4,3	9,5	4,5	18	5	10	7	5	35	5	24	22
666 681 06	B	6	18	-	32	27,5	10	5,4	10,5	5	21	5,5	12	10	6	43	5	21	37
666 681 08	B	8	21	-	34	33	12	5,4	12,5	6	23	5,5	12	15,5	8	51	6	22	59
666 681 10	B	10	25	-	39	35	14,5	6,5	14,5	6	27	6	15	13,5	10	57,5	4	25	90

* Statistical average.

Indexing Plungers 417, with Rest Position

Material: Housing zinc die-cast, plastic coated black, textured finish. Plunger pin: Stainless steel 1.4305. Spring: Stainless steel 1.4310. Knob: Plastic (Polyamide PA) black, matt finish, not removable.

Indexing Plungers with rest position are used where the pin has to remain in retracted position. To achieve this, the knob is rotated by 90 degrees after being retracted. A notched catch stops the locked-in knob from returning to its initial position accidentally or due to vibration.

Type C: with rest position, with knob.

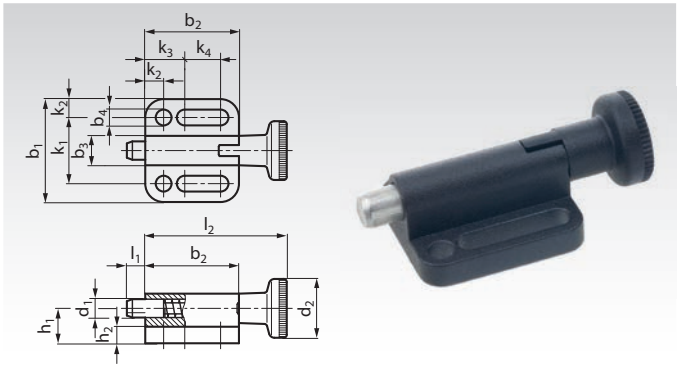

Ordering Details: e.g.: Product No. 666 682 04, Indexing Plunger 417 type C, 4mm

Product No.	Type	d_1 mm	d_2 mm	b_1 mm	b_2 mm	b_3 mm	b_4 mm	h_1 mm	h_2 mm	k_1 mm	k_2 mm	k_3 mm	k_4 mm	l_1 mm	l_2 mm	Spring Load* Initial N	Spring Load* End N	Weight g
666 682 04	C	4	12	22	19	6	3,3	7	4	14	4	8	7	4	29	3	12	10
666 682 05	C	5	16	28	25,5	8	4,3	9,5	4,5	18	5	10	10,5	5	38,5	5	24	25
666 682 06	C	6	18	32	30,5	10	5,4	10,5	5	21	5,5	12	13	6	46	5	21	41
666 682 08	C	8	21	34	37,5	12	5,4	12,5	6	23	5,5	12	20	8	55,5	6	22	66
666 682 10	C	10	25	39	40	14,5	6,5	14,5	6	27	6	15	18,5	10	62,5	4	25	98

* Statistical average.

Indexing Plungers 717, Steel and Stainless Steel, without Rest Position

Material Standard Version: Body zinc plated, blue passivated.
Material Stainless Version: Body stainless steel 1.4305.
Both versions: Plunger pin stainless steel 1.4305. Spring and lifting ring (type A/K) stainless steel 1.4310. Knob (type B/BK) plastic (Polyamide PA) black, matt finish, not removable.

STAINLESS

Indexing plungers 717 are reasonably priced, with small dimensions, for applications where high precision indexing is not required.

Indexing Plungers without rest position are used where, on releasing the knob or lifting ring, the plunger pin should be returned to its initial position by the spring force.

During assembly, do not exceed the fastening torque TA.

Type A: without rest position, with lifting ring, without counter nut.

Type AK: without rest position, with lifting ring, with counter nut.

Type B: without rest position, with knob, without counter nut.

Type BK: without rest position, with knob, with counter nut.

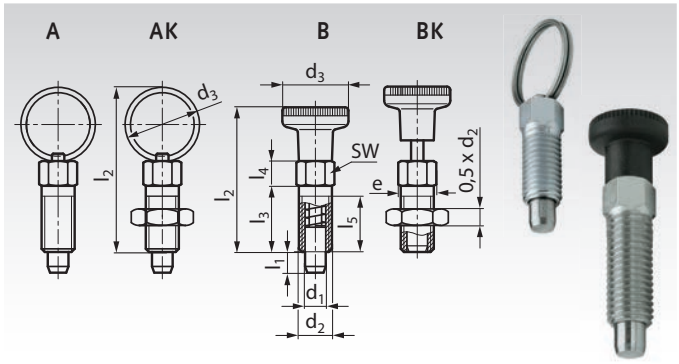

Type A: without rest position, with lifting ring, without counter nut.
Type AK: without rest position, with lifting ring, with counter nut.
Type B: without rest position, with knob, without counter nut.
Type BK: without rest position, with knob, with counter nut.

Ordering Details: e.g.: Product No. 666 717 01, Indexing Plunger 717 type A, 3mm

Product No. Standard	Product No. Stainless	Type	d_1 mm	$l_{1\ min.}$ mm	d_2 mm	d_3 mm	e mm	$l_{2\ max.}$ mm	l_3 mm	l_4 mm	l_5 mm	sw mm	T_A** Nm	Spring Load* Initial N	Spring Load* End N	Weight g
666 717 01	666 718 01	A	3	3,5	M6	14	6,9	30,5	12	4,5	10	6	2	3	12	3,5
666 717 02	666 718 02	A	3	3,5	M6 x 0,75	14	6,9	30,5	12	4,5	10	6	3	3	12	3,6
666 717 03	666 718 03	A	4	4	M6	14	6,9	30,5	12	4,5	10	6	2	3	12	4
666 717 04	666 718 04	A	4	4,5	M8 x 1	18	9,2	40	16	6	13,5	8	8	5	24	8,4
666 717 05	666 718 05	A	5	5	M8	18	9,2	40	16	6	13,5	8	7	5	24	8
666 717 06	666 718 06	A	5	5	M8 x 1	18	9,2	40	16	6	13,5	8	7	5	24	13
666 717 07	666 718 07	A	5	5	M10 x 1	18	11,5	40	16	6	13,5	10	22	5	24	12,8
666 717 08	666 718 08	A	6	6	M10	24	11,5	51,5	20	7,5	17	10	15	5	21	17
666 717 09	666 718 09	A	6	6	M12 x 1,5	24	13,8	51,5	20	7,5	16,5	12	38	5	21	23
666 717 10	666 718 10	A	8	8	M12	30	13,8	63	24	9	20,5	12	20	6	22	30
666 717 11	666 718 11	A	8	8	M12 x 1,5	30	13,8	63	24	9	20,5	12	20	6	22	30
666 717 12	666 718 12	A	8	8	M16 x 1,5	30	19,6	63	24	9	20,5	17	80	6	22	54
666 717 13	666 718 13	A	10	10	M16 x 1,5	30	19,6	65	26	9	22,5	17	80	4	27	55
666 717 14	666 718 14	AK	3	3,5	M6	14	6,9	30,5	12	4,5	10	6	2	3	12	3
666 717 15	666 718 15	AK	3	3,5	M6 x 0,75	14	6,9	30,5	12	4,5	10	6	3	3	12	3,4
666 717 16	666 718 16	AK	4	4	M6	14	6,9	30,5	12	4,5	10	6	2	3	12	5
666 717 17	666 718 17	AK	4	4,5	M8 x 1	18	9,2	40	16	6	13,5	8	8	5	24	10
666 717 18	666 718 18	AK	5	5	M8	18	9,2	40	16	6	13,5	8	7	5	24	11
666 717 19	666 718 19	AK	5	5	M8 x 1	18	9,2	40	16	6	13,5	8	7	5	24	13
666 717 20	666 718 20	AK	5	5	M10 x 1	18	11,5	40	16	6	13,5	10	22	5	24	18
666 717 21	666 718 21	AK	6	6	M10	24	11,5	51,5	20	7,5	17	10	15	5	21	22
666 717 22	666 718 22	AK	6	6	M12 x 1,5	24	13,8	51,5	20	7,5	16,5	12	38	5	21	30
666 717 23	666 718 23	AK	8	8	M12	30	13,8	63	24	9	20,5	12	20	6	22	39
666 717 24	666 718 24	AK	8	8	M12 x 1,5	30	13,8	63	24	9	20,5	12	20	6	22	39
666 717 25	666 718 25	AK	8	8	M16 x 1,5	30	19,6	63	24	9	20,5	17	80	6	22	70
666 717 26	666 718 26	AK	10	10	M16 x 1,5	30	19,6	65	26	9	22,5	17	80	4	27	80
666 717 27	666 718 27	B	3	3,5	M6	12	6,9	26,5	12	4,5	10	6	2	3	12	3
666 717 28	666 718 28	B	3	3,5	M6 x 0,75	12	6,9	26,5	12	4,5	10	6	3	3	12	3,8
666 717 29	666 718 29	B	4	4	M6	12	6,9	26,5	12	4,5	10	6	2	3	12	3,9
666 717 30	666 718 30	B	4	4,5	M8 x 1	16	9,2	35	16	6	13,5	8	8	5	24	9
666 717 31	666 718 31	B	5	5	M8	16	9,2	35	16	6	13,5	8	7	5	24	9
666 717 32	666 718 32	B	5	5	M8 x 1	16	9,2	35	16	6	13,5	8	7	5	24	9,3
666 717 33	666 718 33	B	5	5	M10 x 1	18	11,5	37,5	16	6	13,5	10	22	5	24	14
666 717 34	666 718 34	B	6	6	M10	18	11,5	43	20	7,5	17	10	15	5	21	18
666 717 35	666 718 35	B	6	6	M12 x 1,5	21	13,8	46	20	7,5	16,5	12	38	5	21	26
666 717 36	666 718 36	B	8	8	M12	21	13,8	51	24	9	20,5	12	20	6	22	31
666 717 37	666 718 37	B	8	8	M12 x 1,5	21	13,8	51	24	9	20,5	12	20	6	22	31
666 717 38	666 718 38	B	8	8	M16 x 1,5	25	19,6	55,5	24	9	20,5	17	80	6	22	54
666 717 39	666 718 39	B	10	10	M16 x 1,5	25	19,6	57,5	26	9	22,5	17	80	4	27	18
666 717 40	666 718 40	BK	3	3,5	M6	12	6,9	26,5	12	4,5	10	6	2	3	12	5
666 717 41	666 718 41	BK	3	3,5	M6 x 0,75	12	6,9	26,5	12	4,5	10	6	3	3	12	5,3
666 717 42	666 718 42	BK	4	4	M6	12	6,9	26,5	12	4,5	10	6	2	3	12	5
666 717 43	666 718 43	BK	4	4,5	M8 x 1	16	9,2	35	16	6	13,5	8	8	5	24	10
666 717 44	666 718 44	BK	5	5	M8	16	9,2	35	16	6	13,5	8	7	5	24	12
666 717 45	666 718 45	BK	5	5	M8 x 1	16	9,2	35	16	6	13,5	8	7	5	24	12
666 717 46	666 718 46	BK	5	5	M10 x 1	18	11,5	37,5	16	6	13,5	10	22	5	24	20
666 717 47	666 718 47	BK	6	6	M10	18	11,5	43	20	7,5	17	10	15	5	21	23
666 717 48	666 718 48	BK	6	6	M12 x 1,5	21	13,8	46	20	7,5	16,5	12	38	5	21	35
666 717 49	666 718 49	BK	8	8	M12	21	13,8	51	24	9	20,5	12	20	6	22	40
666 717 50	666 718 50	BK	8	8	M12 x 1,5	21	13,8	51	24	9	20,5	12	20	6	22	40
666 717 51	666 718 51	BK	8	8	M16 x 1,5	25	19,6	55,5	24	9	20,5	17	80	6	22	70
666 717 52	666 718 52	BK	10	10	M16 x 1,5	25	19,6	57,5	26	9	22,5	17	80	4	27	76

* Statistical average.
** Fastening torque during assembly.

Indexing Plungers 717, Steel and Stainless Steel, with Rest Position

Material Standard Version: Body zinc plated, blue passivated.
Material Stainless Version: Body stainless steel 1.4305.
Both versions: Plunger pin stainless steel 1.4305. Spring stainless steel 1.4310. Knob (type B/BK) plastic (Polyamide PA) black, matt finish, not removable.

STAINLESS

Indexing plungers 717 are reasonably priced, with small dimensions, for applications where high precision indexing is not required.

Indexing Plungers with rest position are used where the pin has to remain in retracted position. To achieve this, the knob is rotated by 90 degrees after being retracted. A notched catch stops the locked-in knob from returning to its initial position accidentally or due to vibration.

Type C: with rest position, with knob, without counter nut.

Type CK: with rest position, with knob ring, with counter nut.

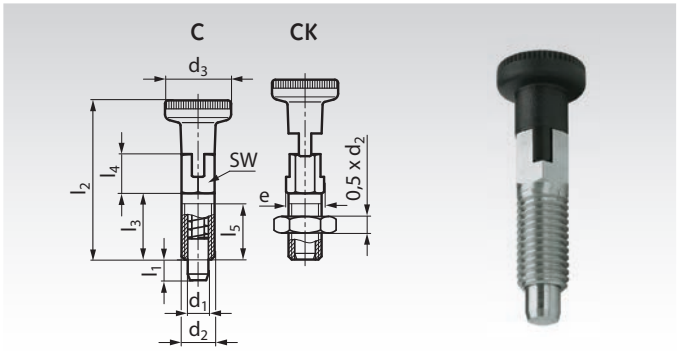

Type C: with rest position, with knob, without counter nut.
Type CK: with rest position, with knob, with counter nut.

Ordering Details: e.g.: Product No. 666 717 53, Indexing Plunger 717 type C, 3mm

Product No. Standard	Product No. Stainless	Type	d_1 mm	$l_{1\ min.}$ mm	d_2 mm	d_3 mm	e mm	$l_{2\ max.}$ mm	l_3 mm	l_4 mm	l_5 mm	sw mm	T_A** Nm	Spring Load* Initial N	Spring Load* End N	Weight g
666 717 53	**666 718 53**	C	3	3,5	M6	12	6,9	29	12	7	10	6	2	3	12	4
666 717 54	**666 718 54**	C	3	3,5	M6 x 0,75	12	6,9	29	12	7	10	6	3	3	12	4
666 717 55	**666 718 55**	C	4	4	M6	12	6,9	29	12	7	10	6	2	3	12	4
666 717 56	**666 718 56**	C	4	4,5	M8 x 1	16	9,2	38,5	16	9,5	13,5	8	8	5	24	10
666 717 57	**666 718 57**	C	5	5	M8	16	9,2	38,5	16	9,5	13,5	8	7	5	24	10
666 717 58	**666 718 58**	C	5	5	M8 x 1	16	9,2	38,5	16	9,5	13,5	8	7	5	24	10
666 717 59	**666 718 59**	C	5	5	M10 x 1	18	11,5	41	16	10	13,5	10	22	5	24	16
666 717 60	**666 718 60**	C	6	6	M10	18	11,5	46	20	10,5	17	10	15	5	21	19
666 717 61	**666 718 61**	C	6	6	M12 x 1,5	21	13,8	49	20	11	16,5	12	38	5	21	27
666 717 62	**666 718 62**	C	8	8	M12	21	13,8	55,5	24	13,5	20,5	12	20	6	22	34
666 717 63	**666 718 63**	C	8	8	M12 x 1,5	21	13,8	55,5	24	13,5	20,5	12	20	6	22	57
666 717 64	**666 718 64**	C	8	8	M16 x 1,5	25	19,6	60	24	13,5	20,5	17	80	6	22	60
666 717 65	**666 718 65**	C	10	10	M16 x 1,5	25	19,6	62,5	26	14	22,5	17	80	4	27	66
666 717 66	**666 718 66**	CK	3	3,5	M6	12	6,9	29	12	7	10	6	2	3	12	17
666 717 67	**666 718 67**	CK	3	3,5	M6 x 0,75	12	6,9	29	12	7	10	6	3	3	12	6
666 717 68	**666 718 68**	CK	4	4	M6	12	6,9	29	12	7	10	6	2	3	12	5
666 717 69	**666 718 69**	CK	4	4,5	M8 x 1	16	9,2	38,5	16	9,5	13,5	8	8	5	24	20
666 717 70	**666 718 70**	CK	5	5	M8	16	9,2	38,5	16	9,5	13,5	8	7	5	24	13
666 717 71	**666 718 71**	CK	5	5	M8 x 1	16	9,2	38,5	16	9,5	13,5	8	7	5	24	13
666 717 72	**666 718 72**	CK	5	5	M10 x 1	18	11,5	41	16	10	13,5	10	22	5	24	20
666 717 73	**666 718 73**	CK	6	6	M10	18	11,5	46	20	10,5	17	10	15	5	21	24
666 717 74	**666 718 74**	CK	6	6	M12 x 1,5	21	13,8	49	20	11	16,5	12	38	5	21	20
666 717 75	**666 718 75**	CK	8	8	M12	21	13,8	55,5	24	13,5	20,5	12	20	6	22	44
666 717 76	**666 718 76**	CK	8	8	M12 x 1,5	21	13,8	55,5	24	13,5	20,5	12	20	6	22	57
666 717 77	**666 718 77**	CK	8	8	M16 x 1,5	25	19,6	60	24	13,5	20,5	17	80	6	22	79
666 717 78	**666 718 78**	CK	10	10	M16 x 1,5	25	19,6	62,5	26	14	22,5	17	80	4	27	84

* Statistical average.
** Fastening torque during assembly.

Indexing Plungers 817, Steel and Stainless Steel

Material Steel Version: Steel burnished. Plunger pin: Hardened.
Material Stainless Steel Version: Stainless steel 1.4305. Plunger pin nickel plated. Knob: Plastic Thermoplast (polyamide) black, matt finish, cannot be disassembled.

Indexing plunger 817 offer the following advantages:
- small outer dimensions.
- most of the release mechanism (version C/CK) is covered.
- defined thread length by an undercut at the end of the thread (version G/GK).

Version B/BK with knob, without notched catch, this version is used where, on releasing the knob, the plunger pin should be returned to its initial position by the spring force.
Version C/CK with knob, is used if the plunger pin has to remain in retracted position. To achieve this, the knob is rotated by 90 degrees after being retracted. A notched catch stops the locked-in knob from returning to its initial position accidentally or due to vibration.
Version G/GK with threaded plunger end, for applications where a special knob to customer's request is required or where the plunger pin is not shifted manually.

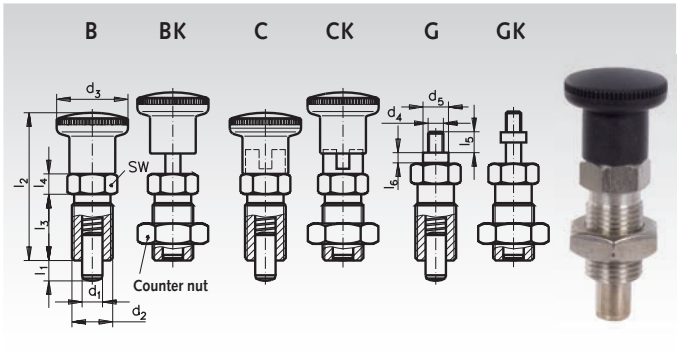

Version B: with knob, without counter nut.
Version BK: with knob, with counter nut.
Version C: with indexing knob, without counter nut.
Version CK: with indexing knob, with counter nut.
Version G: with threaded bolt, without counter nut.
Version GK: with threaded bolt, with counter nut.

Product No. Steel	Product No. Stainless Steel	Version	d_1 -0,02/-0,04 mm	l_1 min. mm	d_2 mm	d_3 mm	d_4 mm	d_5 mm	l_2 mm	l_3 mm	l_4 mm	l_5 mm	l_6 mm	SW mm	Spring Load* Initial N	Spring Load* End N	Weight g
666 684 00	**666 996 84**	B	4	4	M8x1	16	-	-	35	16	5	-	-	10	4,0	12,0	11,0
666 685 00	**666 996 85**	B	5	5	M10x1	19	-	-	40	18	6	-	-	12	5,0	15,0	18,0
666 686 00	**666 996 86**	B	6	6	M12x1,5	23	-	-	48	22	6	-	-	14	6,0	19,0	29,0
666 687 00	**666 996 87**	B	8	8	M16x1,5	28	-	-	58	26	8	-	-	17	8,5	26,0	63,0
666 690 00	**666 996 90**	B	10	12	M16x1,5	28	-	-	58	26	8	-	-	17	9,5	38,0	64,0
666 694 00	**666 996 94**	BK	4	4	M8x1	16	-	-	35	16	5	-	-	10	4,0	12,0	13,8
666 695 00	**666 996 95**	BK	5	5	M10x1	19	-	-	40	18	6	-	-	12	5,0	15,0	25,0
666 696 00	**666 996 96**	BK	6	6	M12x1,5	23	-	-	48	22	6	-	-	14	6,0	19,0	39,0
666 698 00	**666 996 98**	BK	8	8	M16x1,5	28	-	-	58	26	8	-	-	17	8,5	26,0	83,0
666 700 00	**666 997 00**	BK	10	12	M16x1,5	28	-	-	58	26	8	-	-	17	9,5	38,0	79,8
666 704 00	**666 997 04**	C	4	4	M8x1	16	-	-	35	16	5	-	-	10	4,0	12,0	13,0
666 705 00	**666 997 05**	C	5	5	M10x1	19	-	-	40	18	6	-	-	12	5,0	15,0	21,0
666 706 00	**666 997 06**	C	6	6	M12x1,5	23	-	-	48	22	6	-	-	14	6,0	19,0	33,0
666 708 00	**666 997 08**	C	8	8	M16x1,5	28	-	-	58	26	8	-	-	17	8,5	26,0	66,5
666 710 00	**666 997 10**	C	10	12	M16x1,5	28	-	-	58	26	8	-	-	17	9,5	38,0	69,6
666 714 00	**666 997 14**	CK	4	4	M8x1	16	-	-	35	16	5	-	-	10	4,0	12,0	15,8
666 715 00	**666 997 15**	CK	5	5	M10x1	19	-	-	40	18	6	-	-	12	5,0	15,0	28,0
666 716 00	**666 997 16**	CK	6	6	M12x1,5	23	-	-	48	22	6	-	-	14	6,0	19,0	43,0
666 718 00	**666 997 18**	CK	8	8	M16x1,5	28	-	-	58	26	8	-	-	17	8,5	26,0	86,5
666 720 00	**666 997 20**	CK	10	12	M16x1,5	28	-	-	58	26	8	-	-	17	9,5	38,0	85,0
666 734 00	**666 997 34**	G	4	4	M8x1	-	M3	7	-	16	5	4,5	2,5	10	4,0	12,0	9,8
666 735 00	**666 997 35**	G	5	5	M10x1	-	M4	8	-	18	6	5,5	3,0	12	5,0	15,0	15,8
666 736 00	**666 997 36**	G	6	6	M12x1,5	-	M5	9	-	22	6	7,0	3,5	14	6,0	19,0	25,3
666 738 00	**666 997 38**	G	8	8	M16x1,5	-	M6	10	-	26	8	8,5	4,0	17	8,5	26,0	53,9
666 740 00	**666 997 40**	G	10	12	M16x1,5	-	M6	10	-	26	8	8,5	4,0	17	9,5	38,0	55,6
666 744 00	**666 997 44**	GK	4	4	M8x1	-	M3	7	-	16	5	4,5	2,5	10	4,0	12,0	12,7
666 745 00	**666 997 45**	GK	5	5	M10x1	-	M4	8	-	18	6	5,5	3,0	12	5,0	15,0	22,8
666 746 00	**666 997 46**	GK	6	6	M12x1,5	-	M5	9	-	22	6	7,0	3,5	14	6,0	19,0	35,3
666 748 00	**666 997 48**	GK	8	8	M16x1,5	-	M6	10	-	26	8	8,5	4,0	17	8,5	26,0	73,9
666 750 00	**666 997 50**	GK	10	12	M16x1,5	-	M6	10	-	26	8	8,5	4,0	17	9,5	38,0	75,6

* Statistical average.

Steel Versions:



Stainless Steel Versions:



Control Knobs 726.1

Material:
Aluminium, black anodised finish, scale (version S) and arrow (version A): white, engraved with laser precision . Knob cover disk: light- grey plastic. Collet/hexagon nut: brass. Stainless steel set screw: DIN 916 with Allen screw and serrated end.

Type A: with arrow.
Type B: neutral, without arrow or grading.
Type S: with scale 0...9, 20 graduations.

Version 1: with set screw (bore d_2).
Version 2: with collet (bore d_3).

When mounting, the cover is pressed in by hand, for demounting it can be lifted up at the slot using a screwdriver. The collet version allows easy "adjustment" of the knobs and offers completely secure mounting on the shaft. Scale or arrow are fully abrasion proof and easy to read, as the engraving makes the aluminium coloured figures and numbers stand out against the black, anodised surface. Besides the standard scale (Version S) these knobs can be supplied with any scale desired (on request).

Ordering Details: e.g.: Product No. 660 701 22, Control Knob Vers. 1, Version A, 22 mm

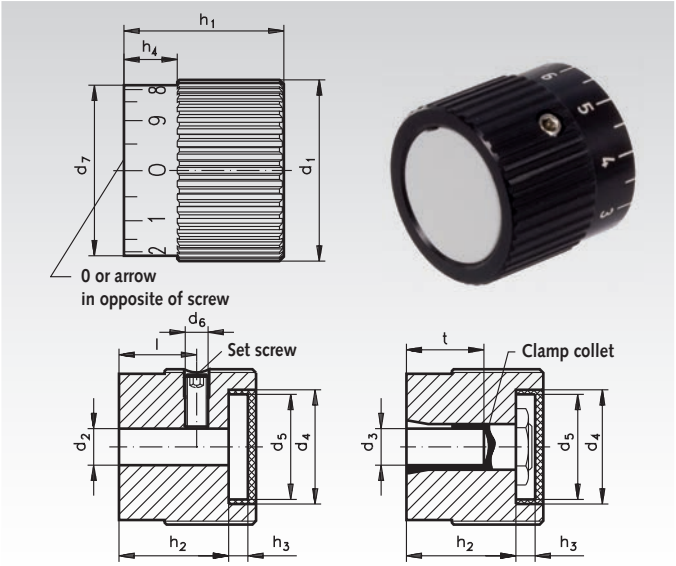

Product No. Version 1	Product No. Version 2	Type	d_1 mm	d_2^{H8} mm	d_3 mm	d_4 mm	d_5 mm	d_6 mm	d_7 mm	h_1 mm	h_2 mm	h_3 mm	h_4 mm	l mm	t mm	Weight in g Vers. 1	Vers. 2
660 701 22	-	A	22	5	-	16	14	M4	20	22	16	4,3	8	12,5	-	17	-
660 701 27	**660 705 27**	A	27	6	6	20	18	M4	25	26	20	4,3	9	14	14	32	37
660 701 34	**660 705 34**	A	34	8	8	25	23	M5	32	30	24	4,2	10	15	17	58	65
660 701 42	**660 705 42**	A	42	10	10	32	30	M5	40	34	28	4,0	11	16	20	103	112
660 702 22	-	B	22	5	-	16	14	M4	20	22	16	4,3	8	12,5	-	17	-
660 702 27	**660 706 27**	B	27	6	6	20	18	M4	25	26	20	4,3	9	14	14	32	37
660 702 34	**660 706 34**	B	34	8	8	25	23	M5	32	30	24	4,2	10	15	17	58	65
660 702 42	**660 706 42**	B	42	10	10	32	30	M5	40	34	28	4,0	11	16	20	103	112
660 703 22	-	S	22	5	-	16	14	M4	20	22	16	4,3	8	12,5	-	17	-
660 703 27	**660 707 27**	S	27	6	6	20	18	M4	25	26	20	4,3	9	14	14	32	37
660 703 34	**660 707 34**	S	34	8	8	25	23	M5	32	30	24	4,2	10	15	17	58	65
660 703 42	**660 707 42**	S	42	10	10	32	30	M5	40	34	28	4,0	11	16	20	103	112



Type A: with arrow.



Type B: neutral, without arrow or grading.



Type S: with scale 0...9, 20 graduations.



Version 1: with set screw d_6 (bore d_2).
Version 2: with collet (bore d_3).



Reworking within 24h-service possible. Custom made parts on request.

Star Knobs DIN 6335 GG

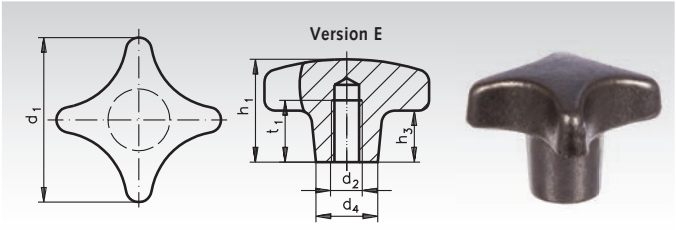

Material: Grey cast iron.
Type E = with tapped blind hole.

Ordering Details: e.g.: Product No. 660 232 00, Star Knobs DIN 6335 GG, Vers. E 32 mm

Product No. Type E	d_1 mm	d_2 mm	d_4 mm	h_1 mm	h_3 mm	t_1 mm	Weight g
660 232 00	32	M6	12	21	10	12	30
660 240 00	40	M8	14	26	14	15	49
660 250 00	50	M10	18	34	20	18	105
660 263 00	63	M12	20	42	25	22	170
660 280 00	80	M16	25	52	30	28	350
660 298 00	100	M20	32	65	38	36	715

Star Knobs Similar to DIN 6335 Pr

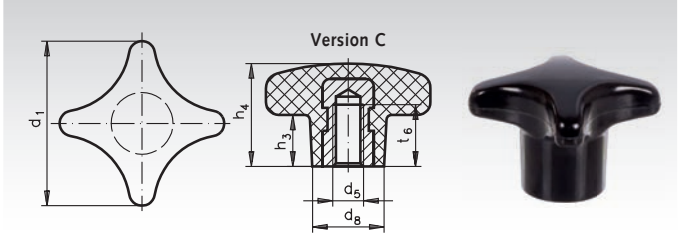

Material: Plastic PF31, black, glossy finish.
Type K = with press-fitted threaded bush made from brass.

Ordering Details: e.g.: Product No. 660 520 00, Star Knobs DIN 6335 Pr, Vers. K 20 mm

Product No. Type K	d_1 mm	d_5 mm	d_8 mm	h_3 mm	h_4 mm	$t_{6\ min.}$ mm	Weight g
660 520 00	20	M4	10	6	13	6,5	3
660 525 00	25	M5	13	8	17	9,5	7
660 532 00	32	M6	14	10	20	12	10
660 540 00	40	M8	18	14	26	14	19
660 550 00	50	M10	22	18	32	18	35
660 563 00*	63	M12	26	22	40	22	65
660 580 00*	80	M16	34	29	53	30	137

* With threaded bush made from steel.

Star Knobs with Axial Bearing

Material: Grip: Thermoplast (PA).
Insert: Heat-treated steel nitrided, burnished.

The advantages of the axial bearing:
- double clamping force with same lever size, by reducing the surface friction.
- Less wear on the component due to fixed locating face.
- Little settling due to higher pre-tensioning force of the bolt or thread.

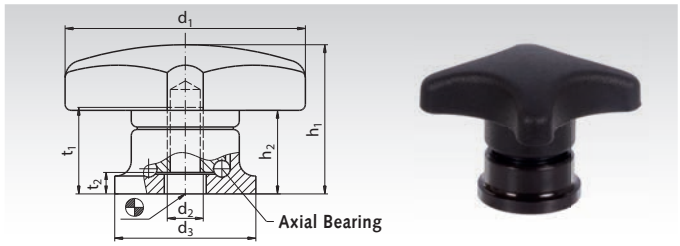

Ordering Details: e.g.: Product No. 660 640 00, Star Knob with Axial Bearing, Ø 40 mm

Product No.	d_1 mm	d_2 mm	d_3 mm	h_1 mm	h_2 mm	t_1 mm	t_2 mm	Weight g
660 640 00	40	M6	24	27	15	12,5	5	45
660 650 00	50	M8	25	34	22,5	14	4,2	68
660 663 00	63	M10	30	41	26,5	18	5,4	111
660 680 00	80	M12	35	54	34	26,5	6,6	218

Star Knob Screws with Axial Bearing

Material: Grip: Thermoplast (PA).
Insert: Heat-treated steel nitrided, burnished.
Screw: Steel tensile strength 8.8, burnished.

The advantages of the axial bearing:
- double clamping force with same lever size, by reducing the surface friction.
- Less wear on the component due to fixed locating face.
- Little settling due to higher pre-tensioning force.

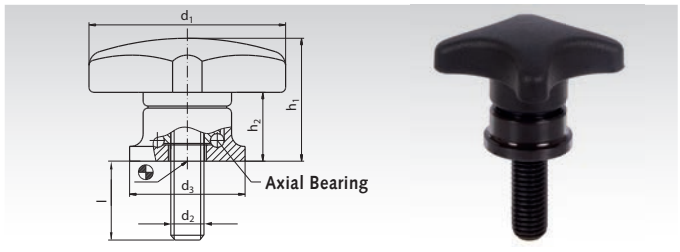

Ordering Details: e.g.: Product No. 660 640 01, Star Knob Screw with Axial Bearing, Ø 40mm, M6 x 15mm

Product No.	d_1 mm	d_2 mm	l mm	d_3 mm	h_1 mm	h_2 mm	Weight g
660 640 01	40	M6	15	24	27	15	50
660 640 02	40	M6	25	24	27	15	52
660 650 01	50	M8	20	25	34	22,5	81
660 650 02	50	M8	35	25	34	22,5	86
660 663 01	63	M10	30	30	41	26,5	137
660 663 02	63	M10	40	30	41	26,5	142
660 680 01	80	M12	30	35	54	34	258
660 680 02	80	M12	50	35	54	34	276

Star Knobs DIN 6336 GG

Material: Grey cast iron.
Version C = with blind hole d_3^{H7}.
Version E = with tapped blind hole d_2.

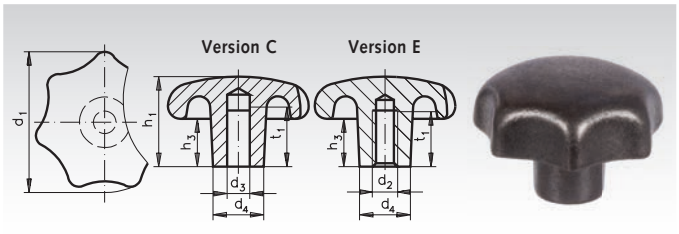

Ordering Details: e.g.: Product No. 661 132 00, Star Knob DIN 6336 GG, Vers. C 32 mm

Product No. Vers. C	Product No. Vers. E	d_1 mm	d_2 mm	d_3^{H7} mm	d_4 mm	h_1 mm	h_3 mm	t_1 mm	Weight Vers. C g	Weight Vers. E g
661 132 00	**661 232 00**	32	M6	6	12	20	10	12	47	49
661 140 00	**661 240 00**	40	M8	8	14	25	13	15	70	70
661 150 00	**661 250 00**	50	M10	10	18	32	17	18	145	148
661 163 00	**661 263 00**	63	M12	12	20	40	21	22	246	254
661 180 00	**661 280 00**	80	M16	16	25	50	25	28	542	542

Star Knobs Similar to DIN 6336 Pr

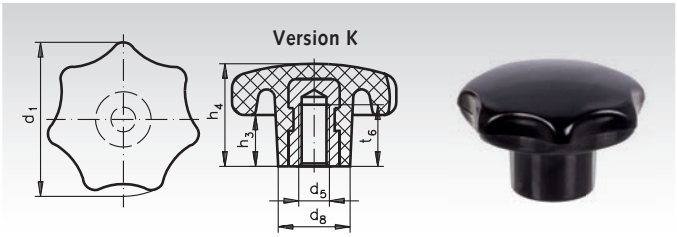

Material: Plastic PF31, black, glossy finish.
Version K = with threaded bush of zinc-plated steel.

Ordering Details: e.g.: Product No. 661 520 00, Star Knob DIN 6336 Pr, Vers. K 20 mm

Product No. Vers. K	d_1 mm	d_5 mm	d_8 mm	h_3 mm	h_4 mm	$t_{6\ min}$ mm	Weight g
661 520 00*	20	M4*	10	7	13	6,5	3
661 525 00	25	M5	12	8	16	9,5	7
661 532 00	32	M6	14	9	20	12	11
661 540 00	40	M8	18	13	26	14	26
661 550 00	50	M10	22	17	33	18	44
661 563 00	63	M10	25	21	42	18	83
661 564 00	63	M12	25	21	42	22	83
661 580 00	80	M12	35	22	50	22	158

* With threaded bush made from brass.

Star Knobs Similar to DIN 6336 AL

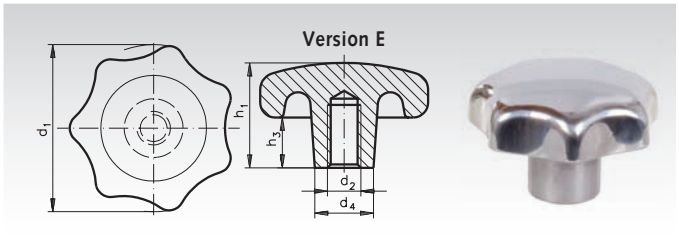

Material: GKAlSi7Cu3, polished.
Version E = with tapped blind hole.

Ordering Details: e.g.: Product No. 661 740 00, Star Knob DIN 6336 EL, Vers. E 40 mm

Product No. Vers. E	d_1 mm	d_2 mm	h_1 mm	h_3 mm	d_4 mm	Weight g
661 740 00	40	M8	26	13	14	35
661 750 00	50	M10	34	17	18	65
661 763 00	63	M12	42	21	20	100
661 780 00	80	M16	52	25	25	220

Star Knobs 5335 Stainless Steel

Material: Stainless steel 1.4305, blasted, matt finish.
Version C = with blind hole d_3^{H7}.
Version E = with tapped blind hole d_2.
Especially suited for the food-processing machinery industry, with smooth and enclosed areas.

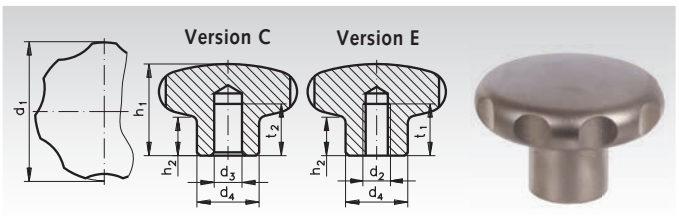

Ordering Details: e.g.: Product No. 661 993 21, Star Knob Stainless Steel, Cast, 40 mm

Product No. Vers. C	Product No. Vers. E	d_1 mm	Thread d_2 mm	Bore d_3 mm	d_4 mm	h_1 mm	h_2 mm	$t_{2min.}$(C) mm	$t_{1min.}$(E) mm	Weight g
-	**661 993 30**	40	M6	-	18	30,5	15	-	12	150
661 993 21	**661 993 31**	40	M8	8	18	30,5	15	15	12	125
-	**661 993 32**	50	M8	-	21	34,0	17	-	15	240
661 993 23	**661 993 33**	50	M10	10	21	34,0	17	18	15	208
-	**661 993 34**	60	M10	-	25	39,0	18	-	18	370
661 993 25	**661 993 35**	60	M12	12	25	39,0	18	22	22	365

Star Knobs 5334 Stainless Steel

Material: Stainless steel 1.4301. Grip drawn from stainless-steel sheet. Hub butt-welded on, blasted, matt finish.

Version C = with blind hole d_3^{H7}.

Version E = with tapped blind hole d_2.

Refined and cost-saving manufacturing techniques led to this cost-efficient stainless steel-version.

Ordering Details: e.g.: Product No. 661 993 01, Star Knob Stainless Steel, Drawn, 40 mm

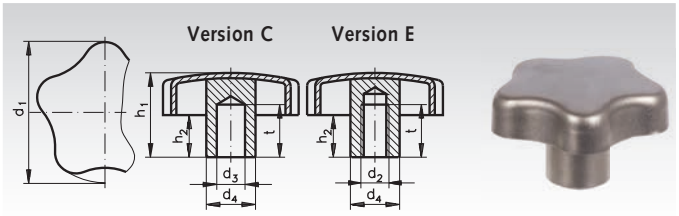

Product No. Vers. C	Product No. Vers. E	d_1 mm	Thread d_2 mm	Bore d_3^{H7} mm	d_4 mm	h_1 mm	h_2 mm	t min. mm	Weight g
661 993 01	**661 993 11**	40	M8	8	14	24	12	15	37
661 993 03	**661 993 13**	50	M10	10	18	31	17,5	18	65
661 993 05	**661 993 15**	60	M12	12	20	39	21	22	107

Star Knob Screws 5334 Stainless Steel

Material: Stainless steel 1.4301. Grip drawn from stainless-steel sheet. Hub butt-welded on, blasted, matt finish.

Refined and cost-saving manufacturing techniques led to this cost-efficient stainless steel-version.

Ordering Details: e.g.: Product No. 661 993 01, Star Knob Screw Stainless Steel, 40 mm

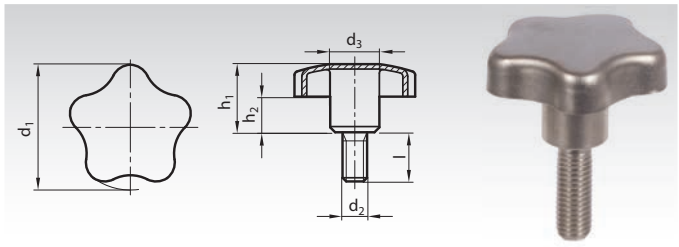

Product No.	d_1 mm	d_2 mm	l mm	d_3 mm	h_1 mm	h_2 mm	Weight g
661 993 41	40	M8	20	14	24	12	50
661 993 42	40	M8	30	14	24	12	55
661 993 43	40	M8	40	14	24	12	57
661 993 44	50	M10	20	18	30	16,5	91
661 993 45	50	M10	30	18	30	16,5	97
661 993 46	50	M10	40	18	30	16,5	101
661 993 47	60	M12	30	20	37,5	20	155
661 993 48	60	M12	40	20	37,5	20	162
661 993 49	60	M12	50	20	37,5	20	170



Reworking within 24h-service possible. Custom made parts on request.

Star Knobs Similar to DIN 6336, Thermoplast

Material: Plastic Thermoplast (Polyamide), impact resistant, black, matt finish. Bush: Steel, zinc-plated, chromated blue.

Version C = with blind hole d_3^{H7}.

Version E = with tapped blind hole d_2.

The full diameter of the contact surface is made from Steel. The protruding steel bush allows a perfect cross-pin connection.

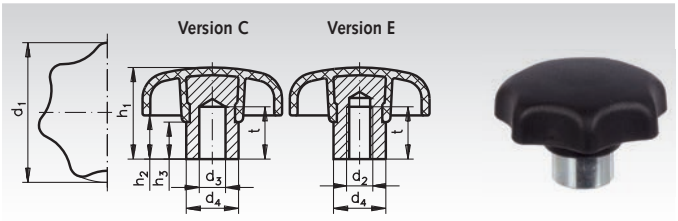

Ordering Details: e.g.: Product No. 661 332 00, Star Knob Thermoplast, 32 mm

Product No. Vers. C	Product No. Vers. E	d_1 mm	Vers. C d_3 mm	Vers. E d_2 mm	d_4 mm	h_1 mm	h_2 mm	h_3 mm	t min. mm	Weight g
661 332 00	**661 332 01**	32	6	M6	12	20	10	8,5	12	15
661 340 00	**661 340 01**	40	8	M8	14	26	13	10	14	25
661 350 00	**661 350 01**	50	10	M10	18	32	17	10	18	53
661 363 00	**661 363 01**	63	12	M12	20	40	21	14	22	85
661 380 00	**661 380 01**	80	16	M16	25	52	27	15	30	195

Star Knob Screws Similar to DIN 6336

Material: Plastic Thermoplast (Polyamide). Threaded bolt: steel, zinc-plated, chromated blue.

Version ST = grip part fully made from plastic with moulded-in threaded bolt.

Version TE = grip part with moulded-in protruding steel hub (steel hub and threaded bolt made from one part, turned).

Ordering Details: e.g.: Product No. 661 825 10, Star Knob screw Thermoplast, 25 mm

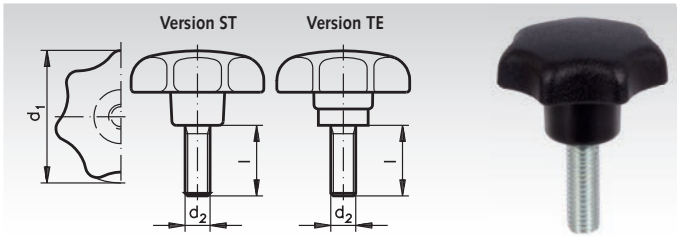

Version ST

Product No. Vers. ST	Product No. Vers. TE	d_1 mm	d_2 mm	l mm	Weight g
661 825 10	-	25	M5	10	5
661 825 15	-	25	M5	15	7
661 825 20	-	25	M5	20	8
661 832 10	-	32	M6	10	10
661 832 16	**661 932 16**	32	M6	16	11
661 832 20	**661 932 20**	32	M6	20	12
661 832 25	**661 932 25**	32	M6	25	13
661 840 16	**661 940 16**	40	M8	16	21
661 840 20	**661 940 20**	40	M8	20	22
661 840 25	**661 940 25**	40	M8	25	24
661 840 30	**661 940 30**	40	M8	30	26
661 850 20	-	50	M10	20	43
661 850 25	**661 950 25**	50	M10	25	45
661 850 30	**661 950 30**	50	M10	30	48
661 850 45	**661 950 45**	50	M10	45	58
661 863 20	-	63	M12	20	79
661 863 30	**661 963 30**	63	M12	30	91
661 863 40	**661 963 40**	63	M12	40	105
661 863 60	**661 963 60**	63	M12	60	115



Version TE



Reworking within 24h-service possible. Custom made parts on request.

Triangular Knobs, Made from Thermoplast

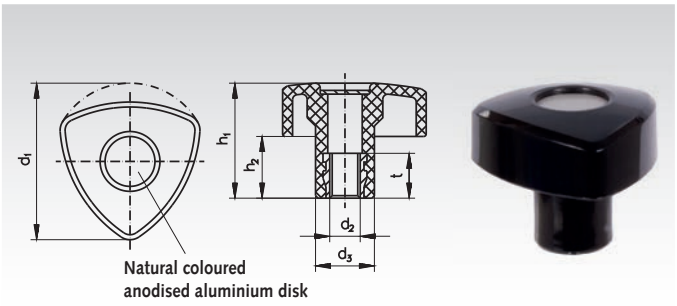

Material: Thermoplast (Polyamide PA),
black glossy finish, brass bush.

Very elegant and easy to grip.

Ordering Details: e.g.: Product No. 661 632 11, Triangular Knob, 32mm, M5

Product No.	d_1 mm	d_2 mm	d_3 mm	h_1 mm	h_2 mm	t mm	Weight g
661 632 11	32	M5	14	26	16	10	7
661 632 12	32	M6	14	26	16	12	9
661 640 11	40	M6	16	30	17	12	11
661 640 12	40	M8	16	30	17	14	13
661 650 11	50	M8	19	35	19	14	18
661 650 12	50	M10	19	35	19	16	22
661 660 11	60	M10	22	41	22	16	30
661 660 12	60	M12	22	41	22	18	32

Triangular Knobs, Made from Stainless Steel

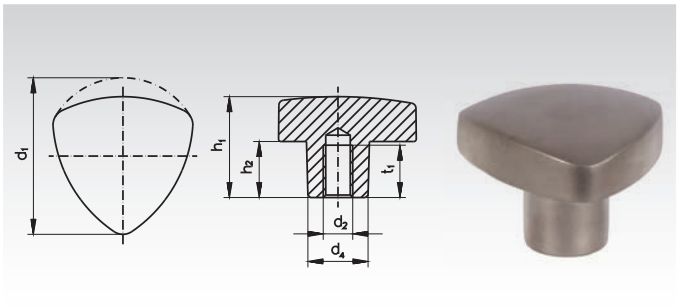

Material: Stainless steel 1.4308, matt blasted.

Elegant, easy to grip and clean.
For comparably high torque transmission.

Ordering Details: e.g.: Product No. 661 996 31, Triangular Knob stainless, 32mm, M5

Product No.	d_1 mm	d_2 mm	d_4 mm	h_1 mm	h_2 mm	t mm	Weight g
661 996 31	32	M5	12	21	12	10	62
661 996 32	32	M6	12	21	12	10	60
661 996 41	40	M6	14	26	14	12	103
661 996 42	40	M8	14	26	14	12	100
661 996 51	50	M8	18	33	19	15	160
661 996 52	50	M10	18	33	19	15	155
661 996 61	60	M10	20	41	23	18	295
661 996 62	60	M12	20	41	23	18	290

Triangular Knob screws, Made from Thermoplast

Material: Thermoplast (Polyamide PA),
black glossy finish.
Grub screw, zinc-plated steel, chromated.

Very elegant and easy to grip.

Ordering Details: e.g.: Product No. 661 632 13, Triangular Knob screw, 32mm, M5

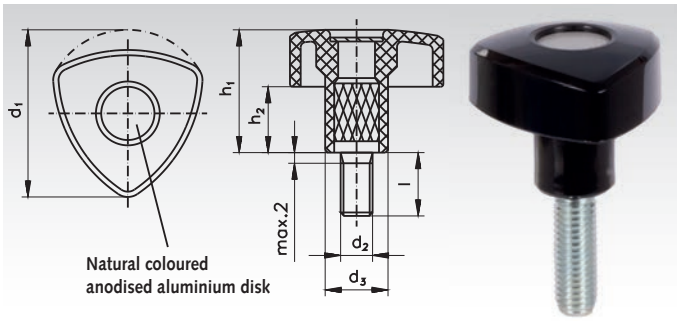

Product No.	d_1 mm	d_2 mm	l mm	h_1 mm	h_2 mm	d_3 mm	Weight g
661 632 13	32	M5	10	26	16	14	9
661 632 14	32	M5	20	26	16	14	10
661 632 15	32	M5	40	26	16	14	13
661 632 16	32	M6	10	26	16	14	10
661 632 17	32	M6	20	26	16	14	13
661 632 18	32	M6	40	26	16	14	15
661 640 13	40	M6	10	30	17	16	14
661 640 14	40	M6	20	30	17	16	15
661 640 15	40	M6	40	30	17	16	19
661 640 16	40	M8	16	30	17	16	19
661 640 17	40	M8	30	30	17	16	25
661 640 18	40	M8	50	30	17	16	30
661 650 13	50	M8	16	35	19	19	28
661 650 14	50	M8	30	35	19	19	32
661 650 15	50	M8	50	35	19	19	37
661 650 16	50	M10	20	35	19	19	35
661 650 17	50	M10	30	35	19	19	40
661 650 18	50	M10	50	35	19	19	50
661 660 13	60	M10	20	41	22	22	42
661 660 14	60	M10	30	41	22	22	48
661 660 15	60	M10	50	41	22	22	60
661 660 16	60	M12	20	41	22	22	57
661 660 17	60	M12	30	41	22	22	65
661 660 18	60	M12	50	41	22	22	80

Knurled Knobs, Made from Thermoplast

Material: Thermoplast (Polypropylene PP) reinforced, impact resistant, black, matt, brass bush.

Version C = with blind hole d_2^{H9}

Version E = with threaded blind hole d_3

Special surface (contact points as a quadratic truncated pyramid) for maximum torque without uncomfortable stress on the skin.

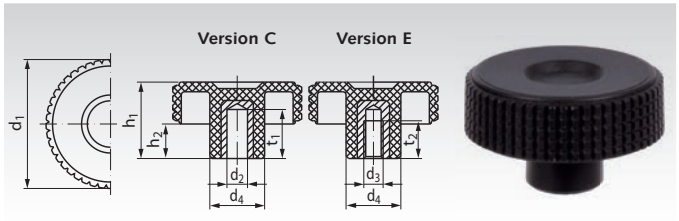

Ordering Details: e.g.: Product No. 661 632 01, Knurled Knob, Thermoplast, 32 mm, M5

Product No. Version C	Product No. Version E	d_1 mm	Version C d_2^{H9} mm	Version E d_3 mm	d_4 mm	h_1 mm	h_2 mm	t_1 min. mm	t_2 mm	Weight g
–	**661 632 01**	32	–	M5	15	22	9	-	10	11
–	**661 632 02**	32	–	M6	15	22	9	-	12	16
661 640 00	**661 640 01**	40	6	M6	17	24	11	14	12	20
–	**661 640 02**	40	–	M8	17	24	11	-	13	21
661 650 00	**661 650 01**	50	8	M8	20	30	13,5	20	20	42
–	**661 650 02**	50	–	M10	20	30	13,5	-	18	32
661 660 00	**661 660 01**	60	10	M10	23	35	15	25	20	46
–	**661 660 02**	60	–	M12	23	35	15	–	20	54
–	**661 670 01**	70	–	M12	24	38	18,5	–	20	65
–	**661 670 02**	70	–	M14	24	38	18,5	–	20	73

Knurled Knob Screws, Made from Thermoplast

Material: Thermoplast (Polypropylene PP) reinforced, impact resistant, black, matt.
Grub screw, zinc-plated steel, chromated.

Special surface (contact points as a quadratic truncated pyramid) for maximum torque without uncomfortable stress on the skin.

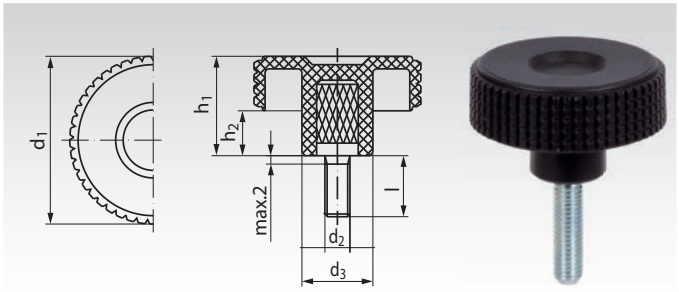

Ordering Details: e.g.: Product No. 661 632 03, Knurled Knob, Thermoplast, 32 mm

Product No.	d_1 mm	d_2 mm	l mm	h_1 mm	h_2 mm	d_3 mm	Weight g
661 632 03	32	M5	10	22	9	15	12
661 632 04	32	M5	20	22	9	15	13
661 632 05	32	M5	40	22	9	15	15
661 632 06	32	M6	10	22	9	15	13
661 632 07	32	M6	20	22	9	15	15
661 632 08	32	M6	40	22	9	15	18
661 640 03	40	M6	10	24	11	17	16
661 640 04	40	M6	20	24	11	17	18
661 640 05	40	M6	40	24	11	17	22
661 640 06	40	M8	16	24	11	17	24
661 640 07	40	M8	30	24	11	17	28
661 640 08	40	M8	50	24	11	17	34
661 650 03	50	M8	16	30	13,5	20	34
661 650 04	50	M8	30	30	13,5	20	36
661 650 05	50	M8	50	30	13,5	20	42
661 650 06	50	M10	20	30	13,5	20	40
661 650 07	50	M10	30	30	13,5	20	45
661 650 08	50	M10	50	30	13,5	20	55
661 660 03	60	M10	20	35	15	23	54
661 660 04	60	M10	30	35	15	23	59
661 660 05	60	M10	50	35	15	23	69
661 660 06	60	M12	20	35	15	23	66
661 660 07	60	M12	30	35	15	23	74
661 660 08	60	M12	50	35	15	23	90
661 670 03	70	M12	30	38	18,5	24	85
661 670 04	70	M12	50	38	18,5	24	100

Wing nuts, Made from Thermoplast

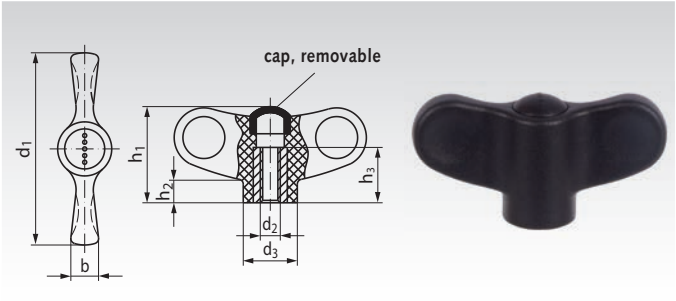

Material: Thermoplast (Polyamide PA),
glass-fibre reinforced, black matt, brass bush.

With indents for large, easy to grip contact surfaces.
For relatively high tightening torques.

Ordering Details: e.g.: Product No. 661 748 01, Wing Nut, Thermoplast, 48mm, M5

Product No.	d_1 mm	d_2 mm	h_1 mm	h_2 mm	h_3 mm	b mm	d_3 mm	Weight g
661 748 01	48	M5	24	5,5	12	7	13,5	10
661 748 02	48	M6	24	5,5	12	7	13,5	9
661 755 01	55	M6	28	6,5	18	8	16	20
661 755 02	55	M8	28	6,5	18	8	16	19
661 770 01	70	M8	36	8	20	10	20	32
661 770 02	70	M10	36	8	20	10	20	34

Wing Nuts, made from Stainless Steel

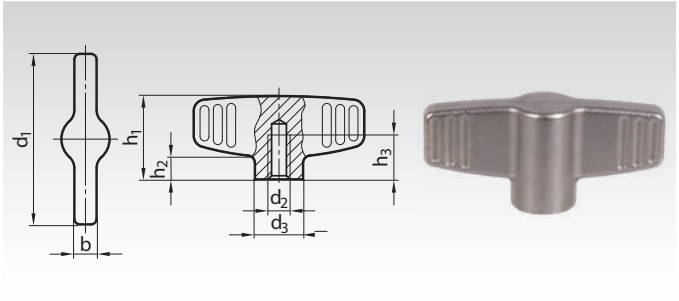

Material: Stainless steel 1.4308,
Precision cast, matt blasted.

With indents for large, easy to grip contact surfaces.
For high tightening torques. Easy to clean.

Ordering Details: e.g.: Product No. 661 997 41, Wing Nut stainless, 46mm, M6

Product No.	d_1 mm	d_2 mm	h_1 mm	$h_{2\ ca.}$ mm	$h_{3\ min.}$ mm	b mm	d_3 mm	Weight g
661 997 41	46	M6	22,5	5,5	12	6	13	38
661 997 42	46	M8	22,5	5,5	15	6	13	36
661 997 51	58	M8	26,5	6,5	15	7	16	70
661 997 52	58	M10	26,5	6,5	18	7	16	65

Wing screws, Made from Thermoplast

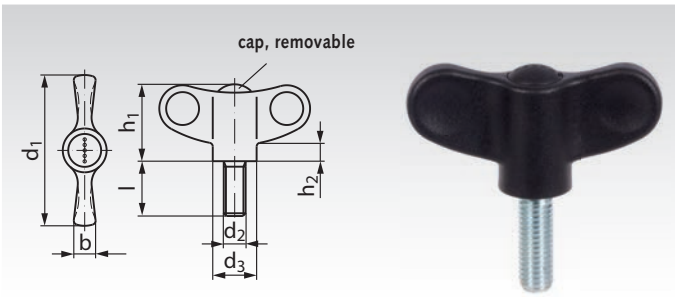

Material: Thermoplast (Polyamide PA),
glass-fibre reinforced, black matt.
Grub screw, zinc-plated steel, chromated.

With indents for large, easy to grip contact surfaces.
For relatively high tightening torques.

Ordering Details: e.g.: Product No. 661 748 03, Wing Screw, Thermoplast, 48mm, M5

Product No.	d_1 mm	d_2 mm	l mm	h_1 mm	h_2 mm	b mm	d_3 mm	Weight g
661 748 03	48	M5	16	24	5,5	7	13,5	10
661 748 04	48	M5	20	24	5,5	7	13,5	12
661 748 05	48	M6	20	24	5,5	7	13,5	15
661 748 06	48	M6	30	24	5,5	7	13,5	15
661 748 07	48	M6	40	24	5,5	7	13,5	17
661 755 03	55	M8	20	28	6,5	8	16	22
661 755 04	55	M8	30	28	6,5	8	16	25
661 755 05	55	M8	40	28	6,5	8	16	29
661 755 06	55	M10	20	28	6,5	8	16	30
661 755 07	55	M10	30	28	6,5	8	16	34
661 755 08	55	M10	40	28	6,5	8	16	38
661 770 03	70	M8	20	36	8	10	20	35
661 770 04	70	M8	30	36	8	10	20	38
661 770 05	70	M10	20	36	8	10	20	41
661 770 06	70	M10	30	36	8	10	20	45
661 770 07	70	M10	40	36	8	10	20	49

Wing screws, Made from Stainless Steel

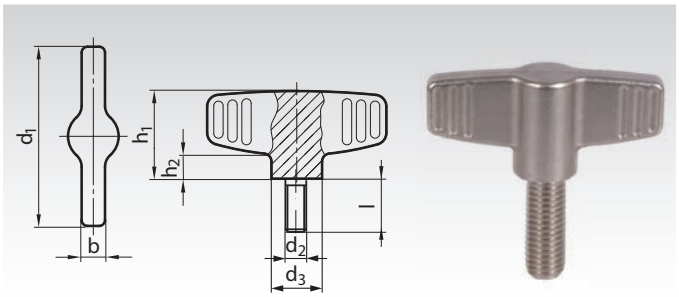

Material: Stainless steel 1.4308,
Precision cast, matt blasted.

With indents for large, easy to grip contact surfaces.
For high tightening torques. Easy to clean.

Ordering Details: e.g.: Product No. 661 997 61, Wing Screw stainless, 46mm, M6 x 16

Product No.	d_1 mm	d_2 mm	l mm	h_1 mm	h_2 mm	b mm	d_3 mm	Weight g
661 997 61	46	M6	16	22,5	6	6	13	40
661 997 62	46	M6	20	22,5	6	6	13	41
661 997 63	46	M6	25	22,5	6	6	13	42
661 997 64	46	M8	16	22,5	6	6	13	60
661 997 65	46	M8	20	22,5	6	6	13	61
661 997 66	46	M8	25	22,5	6	6	13	62
661 997 67	58	M8	20	26,5	7	7	16	83
661 997 68	58	M8	25	26,5	7	7	16	84
661 997 69	58	M8	30	26,5	7	7	16	85
661 997 70	58	M10	20	26,5	7	7	16	80
661 997 71	58	M10	25	26,5	7	7	16	83
661 997 72	58	M10	30	26,5	7	7	16	85

Ball Knobs DIN 319 PF

Material: Plastic PF31 (phenolic resin), black, high-gloss finish.
Version C: With compression-moulded thread.
Version E: With threaded bush of zinc-plated steel.
*M4 threaded bush made from brass.

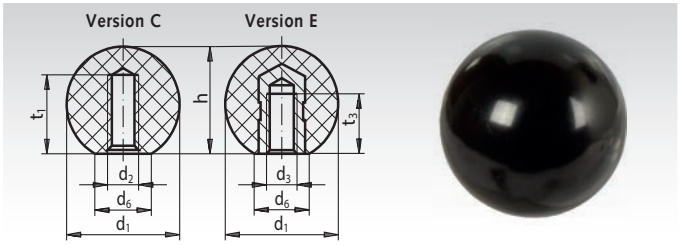

Ordering Details: e.g.: Product No. 664 016 00, Ball Knob DIN 319 PF, Version C, 16 mm

Product No. Version C	Product No. Version E	d_1 mm	d_2 mm	d_3 mm	h mm	d_6 mm	t_1 min. mm	t_3 min. mm	Weight in g Version C	Version E
664 016 00	**664 116 00***	16	M4	M4*	15	8	6	6	2,8	3,4
664 020 00	**664 120 00**	20	M5	M5	18	12	7,5	7,5	5,2	8,1
664 025 00	**664 125 00**	25	M6	M6	22,5	15	9	9	9,9	13,6
664 032 00	**664 132 00**	32	M8	M8	29	18	12	12	20,8	30,2
664 040 00	**664 140 00**	40	M10	M10	37	22	15	15	42,7	54,5
664 045 00	**-**	45**	M10	M10	44	17	15	18	62,0	-
664 050 00	**664 150 00**	50	M12	M12	46	28	18	18	85,4	106,4

** Size 45 is not part of the DIN.

Ball Knobs DIN 319 PF, Version L with Tolerance Ring

Material: Plastic PF31 (phenolic resin), black, high-gloss finish.
Shaft d_5 is not included in the delivery.

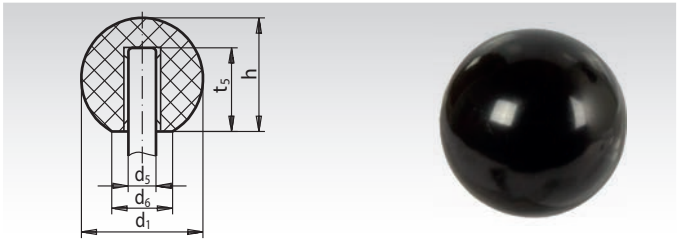

Ordering Details: e.g.: Product No. 664 216 00, Ball Knob DIN 319 PF Version L, 16 mm

Product No. Version L	d_1 mm	d_5^{h9} mm	d_6 mm	h mm	t_5 mm	Weight g
664 216 00	16	4	8	15	11	2,5
664 220 00	20	5	12	18	13	5
664 225 00	25	6	15	22,5	16	10,3
664 226 00	25	8	15	22,5	15	9,9
664 232 00	32	8	18	29	15	22,5
664 233 00	32	10	18	29	20	20
664 240 00	40	10	22	37	20	42
664 241 00	40	12	22	37	23	40
664 250 00	50	16	28	46	23	82

Ball Knobs DIN 319 Version C, Steel, Stainless Steel and Aluminium

Material: Steel, polished.
Stainless steel 1.4305, matt blasted.
Aluminium, polished.

STAINLESS

Ball knobs with dimensions according to DIN 319, made from metal.



Ordering Details: e.g.: Product No. 664 416 00, Ball Knob DIN 319 Version C, Steel, 16mm

Product No. Steel	Product No. Stainless Steel	Product No. Aluminium	d_1 mm	d_2 mm	d_6 mm	h mm	t_1 min. mm	Weight in g Steel	Stainless	Aluminium
664 416 00	**664 994 16**	**664 664 16**	16	M4	8	15	6	15	15	6
664 420 00	**664 994 20**	**664 664 20**	20	M5	12	18	7,5	26	26	11
664 425 00	**664 994 25**	**664 664 25**	25	M6	15	22,5	9	59	59	21
664 432 00	**664 994 32**	**664 664 32**	32	M8	18	29	12	116	116	43
664 440 00	**664 994 40**	**664 664 40**	40	M10	22	37	15	235	235	85
664 450 00	**-**	**664 664 50**	50	M12	28	46	18	475	475	169

Revolving Ball Knobs 3192 with Gear Lever Handle

Material: Duroplast PF31, black, glossy finish.
Bolt: Steel, zinc plated.

Use: Instead of revolving handles, e.g. for handwheels and hand cranks. Revolving ball knobs have the same connecting dimensions as handles DIN 39 and DIN 98 page 548.

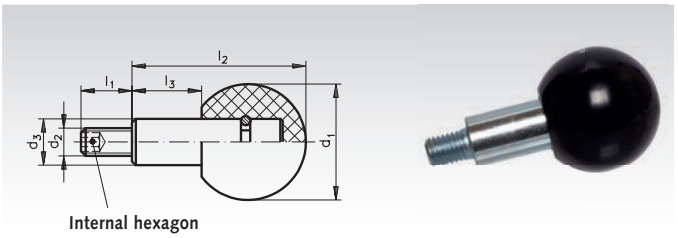

Ordering Details: e.g.: Product No. 664 525 00, Revolving Ball Knob 3192, 25 mm

Product No.	d_1 mm	d_2 mm	d_3 mm	l_1 mm	l_2 mm	l_3 mm	Weight g
664 525 00	25	M6	10	11	37,5	15	28
664 532 00	32	M8	13	13	48	19	62
664 540 00	40	M10	16	14	61	24	117
664 550 00	50	M12	20	21	78	31	237

Gear Lever Handles 209 with Ball Knob DIN 319, Steel Zinc Plated or Stainless

Material: Lever: Steel zinc plated or stainless steel 1.4305 matt.
Ball knob: Plastic duroplast PF31, black, glossy finish.

The knob is screwed on.

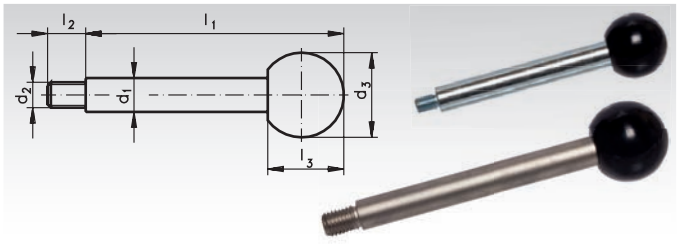

Ordering Details: e.g.: Product No. 666 066 00, Handle 209 with Ball Knob, zinc-plated, 8 mm

Product No. Zinc Plated	Product No. Stainless	d_1 mm	d_2 mm	d_3 mm	l_1 mm	l_2 mm	l_3 mm	Weight g
666 066 00	**666 990 06**	8	M6	20	80	9	18	36
666 067 00	**666 990 07**	8	M6	20	100	9	18	40
666 068 00	**666 990 08**	10	M8	25	100	11	22,5	63
666 069 00	**666 990 09**	10	M8	25	125	11	22,5	78
666 070 00	**666 990 10**	12	M10	32	125	14	29	123
666 071 00	**666 990 11**	12	M10	32	160	14	29	154
666 072 00	**666 990 12**	14	M12	35	160	16	32,5	202
666 073 00	**666 990 13**	14	M12	35	200	16	32,5	250
666 074 00	-	16	M14	40	200	18	37	331
666 075 00	-	16	M14	40	250	18	37	410

Gear Lever Handles 209 with Cylindrical Grip, Steel Zinc Plated or Stainless

Material: Lever: Steel zinc plated or stainless steel 1.4305 matt.
Cylindrical grip: Plastic duroplast PF31, black, glossy finish.

The grip is screwed on.

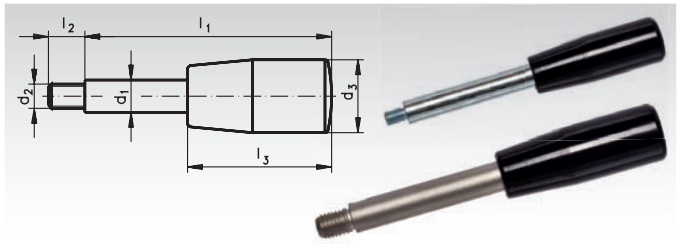

Ordering Details: e.g.: Product No. 666 166 00, Handle 209 with Cylindrical Grip, zinc-plated, 8mm

Product No. Zinc Plated	Product No. Stainless	d_1 mm	d_2 mm	d_3 mm	l_1 mm	l_2 mm	l_3 mm	Weight g
666 166 00	**666 991 06**	8	M6	18	80	9	40	33
666 167 00	**666 991 07**	8	M6	18	100	9	40	44
666 168 00	**666 991 08**	10	M8	21	100	11	50	62
666 169 00	**666 991 09**	10	M8	21	125	11	50	78
666 170 00	**666 991 10**	12	M10	23	125	14	65	103
666 171 00	**666 991 11**	12	M10	23	160	14	65	133
666 172 00	**666 991 12**	14	M12	26	160	16	80	168
666 173 00	**666 991 13**	14	M12	26	200	16	80	216
666 174 00	-	16	M14	28	200	18	90	273
666 175 00	-	16	M14	28	250	18	90	352

Revolving Cylindrical Handles 598

Material:
Version K: Duroplast PF31, black, glossy finish.
Spindle: Steel, zinc-plated.
Version N: Duroplast PF31, black, glossy finish.
Spindle: Stainless steel 1.4305.

STAINLESS

Modern design.

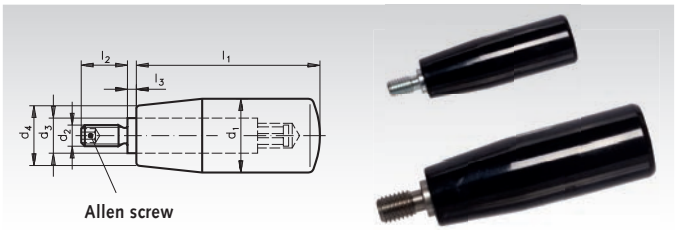

Ordering Details: e.g.: Product No. 663 418 00, Handle 598, Version K, 18 mm

Product No. Vers. K	Product No. Vers. N	d_1 mm	d_2 mm	d_3 mm	d_4 mm	l_1 mm	l_2 mm	l_3 mm	Weight in g Vers. K	Vers. N
663 418 00	**663 518 00**	18	M6	10	15	40	12	2,5	29	29
663 421 00	**663 521 00**	21	M6	10	17	50	13	2,5	42	42
663 422 00	**–**	22	M6	10	18	56	13	2,5	47	-
663 423 00	**663 523 00**	23	M8	13	19	65	14	2,5	79	79
663 426 00	**663 526 00**	26	M10	13	21	80	16	2,5	109	109
663 428 00	**663 528 00**	28	M10	13	22	90	16	2,5	125	125
663 431 00	**663 531 00**	31	M12	14	25	102	20	2,5	175	175

Retractable Handles NG

Material:
Version K: Duroplast PF31, black, glossy finish.
Folding mechanism: Steel, burnished.
Version N: Duroplast PF31, black, glossy finish.
Folding mechanism: Stainless steel 1.4305.

STAINLESS

Use: When the handle must at times not stick out.The handle is pulled out of its taper seating and then tilted. A compression spring locks the handle in both end positions.
All handles are revolving (type 598).

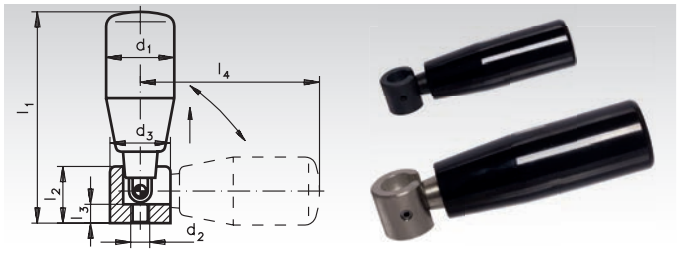

Ordering Details: e.g.: Product No. 663 200 00, Retractable Handle NG, Version K, 21 mm

Product No. Vers. K	Product No. Vers. N	d_1 mm	d_2 mm	d_3 mm	l_1 mm	l_2 mm	$l_3^{-0,5}$ mm	l_4 mm	Weight g
663 200 00	**-**	21	M5	16	67	15,0	5	62	58
663 201 00	**663 992 01**	26	M6	20	102	19,5	6	95	134
663 202 00	**663 992 02**	28	M8	26	118	26,0	10	106	214

Cylindrical Knobs, Press-On Type

Material: Thermoplast (Polypropylene PP), impact resistant, black, matt finish.

These knobs do not require a thread at the shaft.

During mounting, easy blows with a soft hammer are sufficient to drive the knob into place. The shaft end with tolerance h9 should be slightly rounded or chamfered (30°). The knob is quickly mounted and sits absolute vibration-tight.

Temperature resistant up to 80°C.

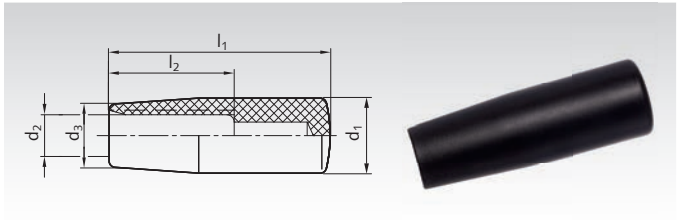

Ordering Details: e.g.: Product No. 662 201 18, Cylindrical Knob, 18 mm

Product No.	d_1 mm	d_2 mm	d_3 mm	l_1 mm	$l_{2\ min.}$ mm	Weight g
662 202 18	18	8	15	40	28	7
662 202 21	21	10	17	50	35	10
662 202 23	23	10	19	65	45	17
662 202 26	26	12	21	80	50	25
662 202 28	28	15	22	90	60	33

Fixed Handles DIN 39 St

Material: Steel, zinc-plated.

Version E = with threaded bolt and Allen screw.

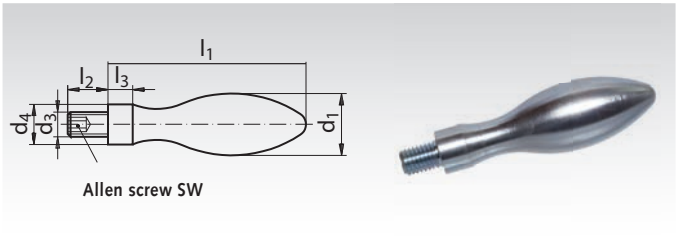

Ordering Details: e.g.: Product No. 662 110 00, Grip DIN 39 St, Vers. E 10 mm

Product No. Vers. E	d_1 mm	d_3 mm	d_4^{H13} mm	l_1 mm	l_2 mm	l_3 mm	SW mm	Weight g
662 110 00	10	M4	7	32	7	4	-	11
662 113 00	13	M5	8	40	9	5	-	24
662 116 00	16	M6	10	50	11	7	3	45
662 120 00	20	M8	13	64	13	8	4	91
662 125 00	25	M10	16	80	14	10	5	177
662 132 00	32	M12	20	100	21	13	6	360
662 136 00	36	M16	22	112	26	14	8	526

Fixed Handles DIN 39 Pr

Material: Plastic Thermoplast (Polyamide), black, matt finish.

Version E = with threaded bolt and Allen screw.

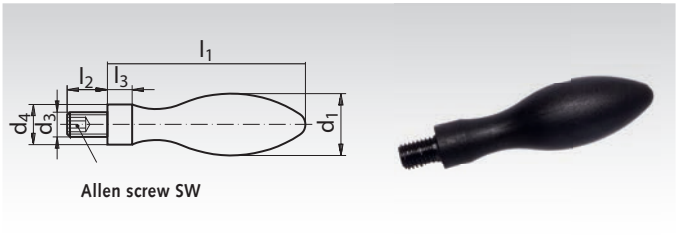

Ordering Details: e.g.: Product No. 662 220 00, Grip DIN 39 Pr, Version E 20 mm

Product No. Vers. E	d_1 mm	d_3 mm	d_4^{H13} mm	l_1 mm	l_2 mm	l_3 mm	SW mm	Weight g
662 220 00	20	M8	13	64	13	8	4	25
662 225 00	25	M10	16	80	14	10	5	50
662 232 00	32	M12	20	100	21	13	6	100

Fixed Handles DIN 39 AL

Material: Aluminium polished.

Version E = with moulded-in threaded bolt and Allen screw.

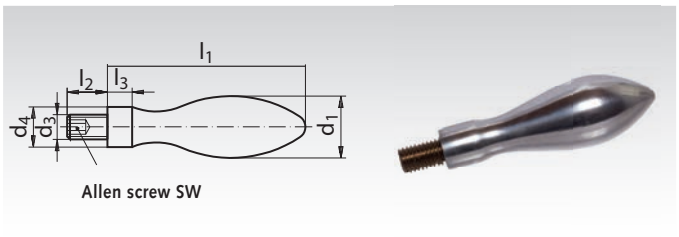

Ordering Details: e.g.: Product No. 662 316 00, Grip DIN 39 AL, Version E 16 mm

Product No. Vers. E	d_1 mm	d_3 mm	d_4^{H13} mm	l_1 mm	l_2 mm	l_3 mm	SW mm	Weight g
662 316 00	16	M6	10	50	10	7	3	20
662 320 00	20	M8	13	64	12	8	4	35
662 325 00	25	M10	16	80	16	12	5	85
662 332 00	32	M12	20	100	21	16	6	150
662 336 00	36	M16	22	112	25	16	8	210

Revolving Handles DIN 98 St

Material: Steel, zinc-plated.
Version E = with threaded spindle and Allen screw.

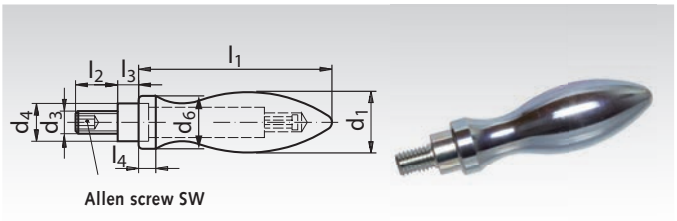

Ordering Details: z.B.: Product No.. 663 116 00, Grip DIN 98 St, Vers. E 16 mm

Product No. Vers. E	d_1 mm	d_3 mm	d_4^{H13} mm	d_6 mm	l_1 mm	l_2 mm	l_3 mm	l_4 mm	SW mm	Weight g
663 116 00	16	M6	10	14	49	11	5,5	5	3	55
663 120 00	20	M8	13	18	61	13	6	6	4	104
663 125 00	25	M10	16	21	75	14	8	6,5	5	187
663 132 00	32	M12	20	26	95	21	10,5	8	6	387
663 136 00	36	M16	22	29	106	26	11	9	8	541

Revolving Handles DIN 98 Pr

Material: Plastic Thermoplast (Polyamide), black, matt finish.
Version E = with threaded spindle and Allen screw.
Spindle: Steel, zinc-plated.

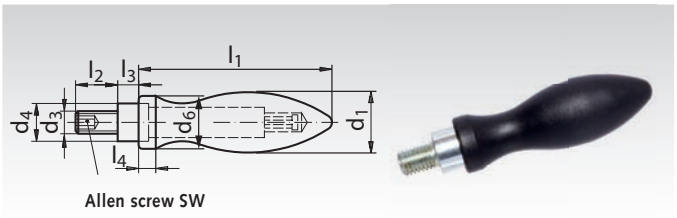

Ordering Details: e.g.: Product No. 663 216 00, Grip DIN 98 Pr, Vers. E 16 mm

Product No. Vers. E	d_1 mm	d_3 mm	d_4^{H13} mm	d_6 mm	l_1 mm	l_2 mm	l_3 mm	l_4 mm	SW mm	Weight g
663 216 00	16	M6	10	14	49	11	5,5	5	3	21
663 220 00	20	M 8	13	18	61	13	6	6	4	45
663 225 00	25	M10	16	21	75	14	8	6,5	5	71
663 232 00	32	M12	20	26	95	21	10,5	8	6	144

Revolving Handles DIN 98 AL

Material: Aluminium polished.
Version E = with threaded spindle and Allen screw.
Spindle Steel, zinc-plated.

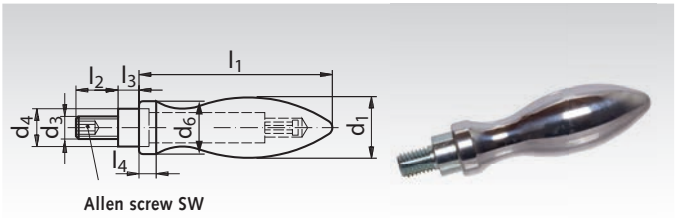

Ordering Details: e.g.: Product No. 663 316 00, Grip DIN 98 AL, Vers. E 16 mm

Product No. Vers. E	d_1 mm	d_3 mm	d_4^{H13} mm	d_6 mm	l_1 mm	l_2 mm	l_3 mm	l_4 mm	SW mm	Weight g
663 316 00	16	M6	10	14	49	11	5,5	5	3	20
663 320 00	20	M8	13	18	61	13	6	6	4	35
663 325 00	25	M10	16	21	75	14	8	6,5	5	85
663 332 00	32	M12	20	26	95	21	10,5	8	6	150
663 336 00	36	M16	22	29	106	26	11	9	8	210

Adjustable Clamping Levers 355, Version N with Internal Thread, Disengaged by Pulling, Plastic

Material: Threaded bush and retaining screw steel, burnished. Grip body: technopolymer (Polyamide PA), glas fibre reinforced, black-grey RAL 7021. Serrated ring zinc die casting.

User-friendly design. To be used preferably when the clamping range is limited or if a specific clamping position is required. By lifting (pulling) the handle the splines work loose and the clamping lever can be turned to the most suitable clamping position. Letting go causes the handle to re-engage automatically.

Temperature resistant up to +130°C.

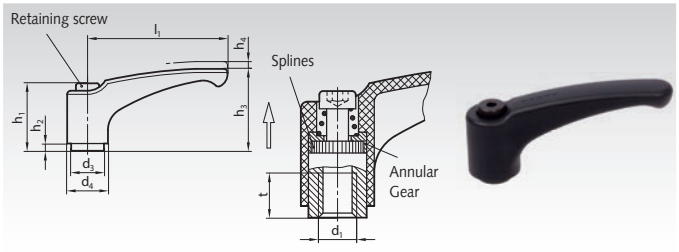

Ordering Details: e.g.: Product No. 665 557 01, Adjustable Clamping Lever 355, version I, 44 mm, M4

Product No.	l_1 mm	d_1 mm	d_3 mm	d_4 mm	h_1 mm	h_2 mm	h_3 mm	h_4 mm	t mm	Weight g
665 557 01	44	M4	10	15,5	24,5	3,5	30,5	3	8	17
665 557 02	44	M5	10	15,5	24,5	3,5	30,5	3	8	17
665 557 03	44	M6	10	15,5	24,5	3,5	30,5	3	8	16
665 557 04	63	M6	13,5	19	31	3,5	38,5	3	10	37
665 557 05	63	M8	13,5	19	31	3,5	38,5	3	10	35
665 557 06	78	M8	16	23	36	3,5	46,5	4	14	62
665 557 07	78	M10	16	23	36	3,5	46,5	4	14	60
665 557 08	95	M10	19	26,5	43	5	56,5	5	17	95
665 557 09	95	M12	19	26,5	43	5	56,5	5	17	90

Adjustable Clamping Levers 355, Version G with External Thread, Disengaged by Pulling, Plastic

Material: Threaded stud and retaining screw steel, burnished. Grip body: technopolymer (Polyamide PA), glas fibre reinforced, black-grey RAL 7021. Serrated ring zinc die casting.

User-friendly design. To be used preferably when the clamping range is limited or if a specific clamping position is required. By lifting (pulling) the handle the splines work loose and the clamping lever can be turned to the most suitable clamping position. Letting go causes the handle to re-engage automatically.

Temperature resistant up to +130°C.

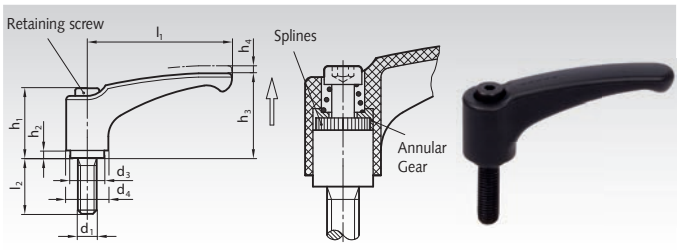

Ordering Details: e.g.: Product No. 665 557 11, Adjustable Clamping Lever 355, version A, 44 mm, M4x12mm

Product No.	l_1 mm	l_2 mm	d_1 mm	d_3 mm	d_4 mm	h_1 mm	h_2 mm	h_3 mm	h_4 mm	Weight g
665 557 11	44	12	M4	10	15,5	24,5	3,5	30,5	3	18
665 557 12	44	16	M4	10	15,5	24,5	3,5	30,5	3	16
665 557 16	44	12	M5	10	15,5	24,5	3,5	30,5	3	19
665 557 18	44	20	M5	10	15,5	24,5	3,5	30,5	3	19
665 557 19	44	25	M5	10	15,5	24,5	3,5	30,5	3	20
665 557 32	63	20	M6	13,5	19	31	3,5	38,5	3	41
665 557 34	63	32	M6	13,5	19	31	3,5	38,5	3	45
665 557 40	63	20	M8	13,5	19	31	3,5	38,5	3	46
665 557 41	63	25	M8	13,5	19	31	3,5	38,5	3	47
665 557 42	63	32	M8	13,5	19	31	3,5	38,5	3	47
665 557 43	63	40	M8	13,5	19	31	3,5	38,5	3	52
665 557 54	78	20	M8	16	23	36	3,5	46,5	4	75
665 557 55	78	25	M8	16	23	36	3,5	46,5	4	70
665 557 56	78	32	M8	16	23	36	3,5	46,5	4	73
665 557 57	78	40	M8	16	23	36	3,5	46,5	4	78
665 557 62	78	20	M10	16	23	36	3,5	46,5	4	79
665 557 63	78	25	M10	16	23	36	3,5	46,5	4	76
665 557 64	78	32	M10	16	23	36	3,5	46,5	4	81
665 557 65	78	40	M10	16	23	36	3,5	46,5	4	86
665 557 66	78	50	M10	16	23	36	3,5	46,5	4	88
665 557 67	78	63	M10	16	23	36	3,5	46,5	4	94
665 557 78	95	32	M10	19	26,5	43	5	56,5	5	120
665 557 79	95	40	M10	19	26,5	43	5	56,5	5	121
665 557 80	95	50	M10	19	26,5	43	5	56,5	5	128
665 557 81	95	63	M10	19	26,5	43	5	56,5	5	133
665 557 86	95	32	M12	19	26,5	43	5	56,5	5	125
665 557 87	95	40	M12	19	26,5	43	5	56,5	5	131
665 557 88	95	50	M12	19	26,5	43	5	56,5	5	138
665 557 89	95	63	M12	19	26,5	43	5	56,5	5	148

Adjustable Clamping Levers 120 Version N with Internal Thread, Disengaged by Pulling

Material: Handle: Zinc die-cast. Threaded bush and locking screw: Steel burnished. Handle: plastic coated, colour black RAL 9005.

Version N = Handle slanted, with metric-threaded bush.

As they are adjustable, they are very versatile in use.
The threaded insert is connected to the lever via the serration and can be released by pulling.

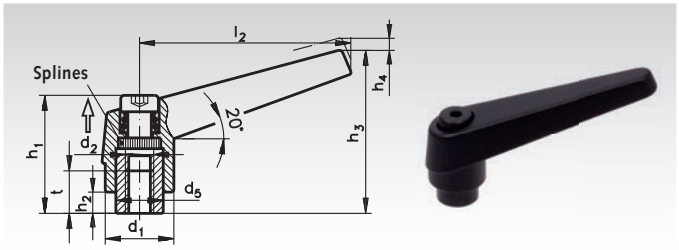

Ordering Details: e.g.: Product No. 665 705 00, Adjustable Clamping Lever, Thread M5

Product No. Version N	d_1 mm	d_2 mm	d_5 mm	h_1 mm	h_2 mm	Stroke h_4 mm	h_3 mm	l_2 mm	t mm	Weight g
665 705 00	14	M5	10	25	4,5	3,5	35	45	9	33
665 706 00	14	M6	10	25	4,5	3,5	35	45	9	33
665 707 00	18	M6	13,5	31	6,5	4	45	62	12	70
665 708 00	18	M8	13,5	31	6,5	4	45	62	12	70
665 709 00	22	M8	16	36	8	4	52	74	15	116
665 710 00	22	M10	16	36	8	4	52	74	15	116
665 711 00	25	M10	19	43	11	4	63	89	18	173
665 712 00	25	M12	19	43	11	4	63	89	18	173
665 713 00	30	M12	23	50,5	12	5	76	108	24	285
665 716 00	30	M16	23	50,5	12	5	76	108	24	285

Adjustable Clamping Levers 120 Version G with External Thread, Disengaged by Pulling

Material: Handle: zinc die-cast. Threaded stud and locking screw: Steel burnished. Handle: Plastic coated, colour black RAL 9005.

Version G = Handle slanted, with metric-threaded stud.

As they are adjustable, they are very versatile in use.
The threaded insert is connected to the lever via the serration and can be released by pulling.

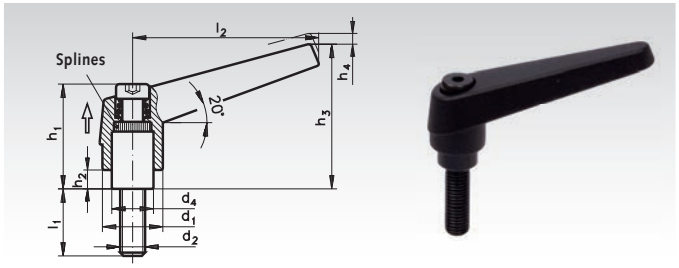

Ordering Details: e.g.: Product No. 665 755 12, Adjustable Clamping Lever, Thread M5x12

Product No. Version G	d_1 mm	d_2 mm	l_1 mm	d_4 mm	h_1 mm	h_2 mm	h_3 mm	Stroke h_4 mm	l_2 mm	Weight g
665 755 12	14	M5	12	10	25	4,5	35	3,5	45	37
665 755 16	14	M5	16	10	25	4,5	35	3,5	45	38
665 755 20	14	M5	20	10	25	4,5	35	3,5	45	39
665 755 25	14	M5	25	10	25	4,5	35	3,5	45	39
665 755 32	14	M5	32	10	25	4,5	35	3,5	45	40
665 756 16	18	M6	16	13,5	31	6,5	45	4	62	76
665 756 20	18	M6	20	13,5	31	6,5	45	4	62	77
665 756 25	18	M6	25	13,5	31	6,5	45	4	62	80
665 756 32	18	M6	32	13,5	31	6,5	45	4	62	81
665 756 40	18	M6	40	13,5	31	6,5	45	4	62	82
665 758 16	18	M8	16	13,5	31	6,5	45	4	62	78
665 758 20	18	M8	20	13,5	31	6,5	45	4	62	80
665 758 25	18	M8	25	13,5	31	6,5	45	4	62	81
665 758 32	18	M8	32	13,5	31	6,5	45	4	62	87
665 758 40	18	M8	40	13,5	31	6,5	45	4	62	89
665 760 20	22	M10	20	16	36	8	52	4	74	132
665 760 25	22	M10	25	16	36	8	52	4	74	136
665 760 32	22	M10	32	16	36	8	52	4	74	137
665 760 40	22	M10	40	16	36	8	52	4	74	143
665 760 50	22	M10	50	16	36	8	52	4	74	148
665 762 25	25	M12	25	19	43	11	63	4	89	203
665 762 32	25	M12	32	19	43	11	63	4	89	206
665 762 40	25	M12	40	19	43	11	63	4	89	214
665 762 50	25	M12	50	19	43	11	63	4	89	219
665 766 32	30	M16	32	23	50,5	12	76	5	108	362
665 766 40	30	M16	40	23	50,5	12	76	5	108	373
665 766 50	30	M16	50	23	50,5	12	76	5	108	386

Note

This clamping lever has proven ideal wherever the swivel range is limited or where a specific lever position is most convenient for the operator. The lever also features a modern design. By pulling the lever, the serrations are disengaged. Now the handle can be turned into any direction and the threaded insert can be screwed in or out by turning the locking screw. When the lever is released, the serration re-engages automatically because of the spring tension.

Adjustable Clamping Levers 300, Version N with Internal Thread, Disengaged by Pulling

Material: Threaded bush and locking screw: steel 5.8, burnished.
Handle: zinc die-cast.
Plastic coating: black.

Modern industrial design. Easy to operate. Ideal wherever parts have to be clamped in confined spaces or in a particular lever position.

Pulling the lever upwards disengages the serrations, allowing the lever to be turned to the ideal clamping position. When the lever is released, the serrations automatically re-engage.

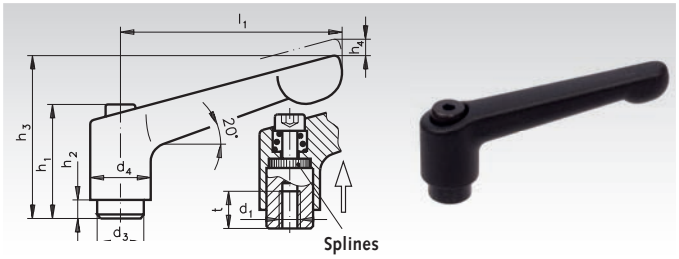

Ordering Details: e.g.: Product No. 665 720 00, Adjustable Clamping Lever 300, 30 mm, M4

Product No.	l_1 mm	d_1 mm	d_3 mm	d_4 mm	h_1 mm	h_2 mm	h_3 mm	h_4 mm	t mm	Weight g
665 720 00	30	M4	10	13	24,5	4	31	3,5	7	27
665 722 00	30	M5	10	13	24,5	4	31	3,5	7	27
665 724 00	45	M4	10	13	24,5	4	35	3,5	8	34
665 726 00	45	M5	10	13	24,5	4	35	3,5	8	34
665 728 00	63	M6	13,5	17,5	31	6,5	45	4	10	76
665 730 00	63	M8	13,5	17,5	31	6,5	45	4	10	74
665 731 00	78	M8	16	21	36	8	55	4	14	123
665 733 00	78	M10	16	21	36	8	55	4	14	119
665 734 00	92	M10	19	24	43	11	65	4	17	194
665 736 00	92	M12	19	24	43	11	65	4	17	171
665 738 00	108	M16	23	30	50,5	12	76	5	23	289

Adjustable Clamping Levers 300, Version G with external Thread, disengaged by pulling

Material: Screw insert and locking screw: Steel 5.8 burnished.
Handle: zinc diecast.
Plastic coating: black.

Modern industrial design. Easy to operate. Ideal wherever parts have to be clamped in confined spaces or in a particular lever position.

The insert is connected to the lever via serrations. Pulling the lever upwards disengages the serrations, allowing the lever to be turned to the ideal clamping position. When the lever is released, the serrations automatically re-engage.

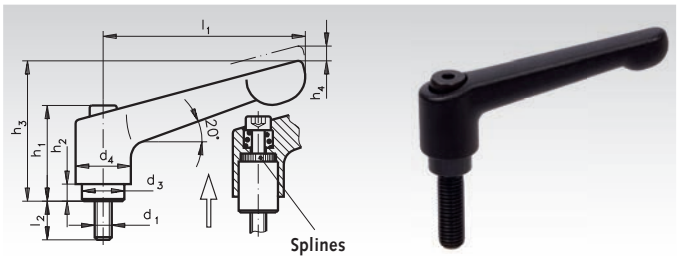

Ordering Details: e.g.: Product No. 665 775 08, Adjustable Clamping Lever 300, 30 mm, M4

Product No.	l_1 mm	l_2 mm	d_1 mm	d_3 mm	d_4 mm	h_1 mm	h_2 mm	h_3 mm	h_4 mm	Weight g
665 775 08	30	12	M4	10	13	24,5	4	31	3,5	28
665 775 09	30	20	M4	10	13	24,5	4	31	3,5	28
665 775 10	30	12	M5	10	13	24,5	4	31	3,5	29
665 775 11	30	20	M5	10	13	24,5	4	31	3,5	29
665 775 12	45	12	M5	10	13	24,5	4	35	3,5	36
665 775 16	45	16	M5	10	13	24,5	4	35	3,5	36
665 775 20	45	20	M5	10	13	24,5	4	35	3,5	36
665 775 25	45	25	M5	10	13	24,5	4	35	3,5	37
665 775 32	45	32	M5	10	13	24,5	4	35	3,5	38
665 776 16	45	16	M6	10	13	24,5	4	35	3,5	37
665 776 20	45	20	M6	10	13	24,5	4	35	3,5	37
665 776 25	45	25	M6	10	13	24,5	4	35	3,5	38
665 776 32	45	32	M6	10	13	24,5	4	35	3,5	40
665 776 40	45	40	M6	10	13	24,5	4	35	3,5	41
665 778 10	63	20	M6	13,5	17,5	31	6,5	45	4	81
665 778 16	63	32	M6	13,5	17,5	31	6,5	45	4	83
665 778 20	63	20	M8	13,5	17,5	31	6,5	45	4	84
665 778 25	63	25	M8	13,5	17,5	31	6,5	45	4	86
665 778 32	63	32	M8	13,5	17,5	31	6,5	45	4	88
665 778 40	63	40	M8	13,5	17,5	31	6,5	45	4	91
665 780 20	78	20	M10	16	21	36	8	55	4	139
665 780 25	78	25	M10	16	21	36	8	55	4	141
665 780 32	78	32	M10	16	21	36	8	55	4	142
665 780 40	78	40	M10	16	21	36	8	55	4	146
665 780 50	78	50	M10	16	21	36	8	55	4	152
665 780 63	78	63	M10	16	21	36	8	55	4	159
665 782 32	92	32	M12	19	24	43	11	65	4	217
665 782 40	92	40	M12	19	24	43	11	65	4	222
665 782 50	92	50	M12	19	24	43	11	65	4	229
665 782 63	92	63	M12	19	24	43	11	65	4	239

On request, the adjustable clamping levers 300 can also be supplied with stainless-steel insert 1.4305.

Adjustable Clamping Levers 300.5, Version IS-N with Internal Thread, Disengaged by Pulling, Stainless

Material: Threaded bush and set screw, stainless steel 1.4305.
Grip body: Stainless steel 1.4308, matt blasted.

STAINLESS

Version IS: With internal hexagon screw.

User-friendly design. To be used preferably when the clamping range is limited or if a specific clamping position is required. The thread insert is connected to the handle via splines and can be removed.
By lifting (pulling) the handle the splines work loose and the clamping lever can be turned to the most suitable clamping position. Letting go causes the handle to engage automatically.

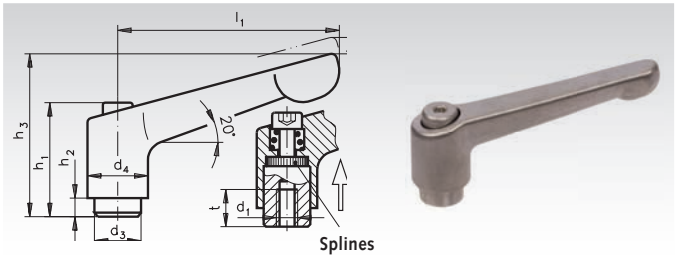

Ordering Details: e.g.: Product No. 665 997 01, Adjustable Clamping Lever 300.5, version I, 45 mm.

Product No.	l_1 mm	d_1 mm	d_3 mm	d_4 mm	h_1 mm	h_2 mm	h_3 mm	h_4 mm	t mm	Weight g
665 997 01	45	M5	10	13	24,5	4	35	3,5	9	34
665 997 02	45	M6	10	13	24,5	4	35	3,5	9	34
665 997 03	63	M6	13,5	17,5	31	6,5	45	4	11	76
665 997 04	63	M8	13,5	17,5	31	6,5	45	4	11	74
665 997 05	78	M8	16	21	36	8	55	4	14	123
665 997 06	78	M10	16	21	36	8	55	4	14	119

Alternatively with outside-hexagon screw on request.

Adjustable Clamping Levers 300.5, Version IS-G with External Thread, Disengaged by Pulling, Stainless

Material: Screwed insert and set screw, stainless steel 1.4305.
Grip body: Stainless steel 1.4308, matt blasted.

STAINLESS

Version IS: With internal hexagon screw.

User-friendly design. To be used preferably when the clamping range is limited or if a specific clamping position is required. The thread insert is connected to the handle via splines and can be removed.
By lifting (pulling) the handle the splines work loose and the clamping lever can be turned to the most suitable clamping position. Letting go causes the handle to engage automatically.

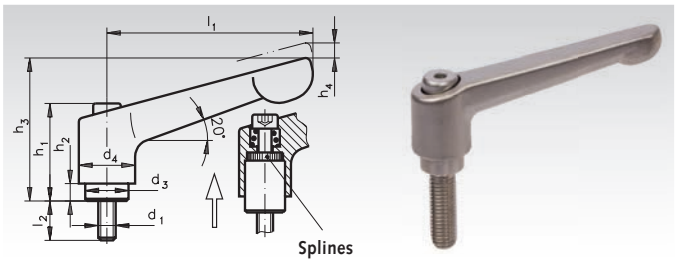

Ordering Details: e.g.: Product No. 665 997 11, Adjustable Clamping Lever 300.5, version A, 45 mm.

Product No.	l_1 mm	l_2 mm	d_1 mm	d_3 mm	d_4 mm	h_1 mm	h_2 mm	h_3 mm	h_4 mm	Weight g
665 997 11	45	12	M5	10	13	24,5	4	35	3,5	36
665 997 12	45	16	M5	10	13	24,5	4	35	3,5	36
665 997 13	45	20	M5	10	13	24,5	4	35	3,5	36
665 997 14	45	25	M5	10	13	24,5	4	35	3,5	37
665 997 15	45	32	M5	10	13	24,5	4	35	3,5	38
665 997 19	45	16	M6	10	13	24,5	4	35	3,5	37
665 997 20	45	20	M6	10	13	24,5	4	35	3,5	37
665 997 21	45	25	M6	10	13	24,5	4	35	3,5	38
665 997 22	45	32	M6	10	13	24,5	4	35	3,5	40
665 997 23	45	40	M6	10	13	24,5	4	35	3,5	41
665 997 26	63	20	M6	13,5	17,5	31	6,5	45	4	81
665 997 27	63	25	M6	13,5	17,5	31	6,5	45	4	82
665 997 28	63	32	M6	13,5	17,5	31	6,5	45	4	83
665 997 29	63	40	M6	13,5	17,5	31	6,5	45	4	83
665 997 30	63	50	M6	13,5	17,5	31	6,5	45	4	84
665 997 33	63	20	M8	13,5	17,5	31	6,5	45	4	84
665 997 34	63	25	M8	13,5	17,5	31	6,5	45	4	86
665 997 35	63	32	M8	13,5	17,5	31	6,5	45	4	88
665 997 36	63	40	M8	13,5	17,5	31	6,5	45	4	91
665 997 37	63	50	M8	13,5	17,5	31	6,5	45	4	94
665 997 38	63	63	M8	13,5	17,5	31	6,5	45	4	98
665 997 39	78	20	M10	16	21	36	8	55	4	139
665 997 40	78	25	M10	16	21	36	8	55	4	141
665 997 41	78	32	M10	16	21	36	8	55	4	142
665 997 42	78	40	M10	16	21	36	8	55	4	146
665 997 43	78	50	M10	16	21	36	8	55	4	152
665 997 44	78	63	M10	16	21	36	8	55	4	159

Alternatively with outside-hexagon screw on request.

Eccentric clamps 927 with internal thread

Materials: Lever: Zinc die cast, with wear-resistant epoxy resin coating, black matt.
Knurled setting nut version A and threaded bush: Zinc-plated steel, chromated.
Contact plate version A: Polyacetal (POM), glass-fibre reinforced, black matt.
Contact plate version B: Polyamid (PA), glass-fibre reinforced, black matt.

Version A: With adjustable contact plate, with knurled setting nut with fine thread. Thus the clamping force and the lever position can be set exactly on the lever side.

Version B: Non-adjustable contact plate. The clamping force, can either be set on the lever side by turning the lever, or on the backside by adjusting the nut/knurled nut if present.

- For rapid clamping and loosening by hand.
- Clamping is made without generating a torque.
- Clamping force is up to 8 kN.

Ordering Details: e.g.: Product No. 661 763 10, Eccentric Clamp Version A, Length 63mm, M6

Version A

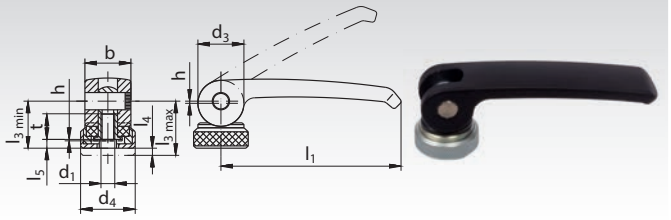

Version B

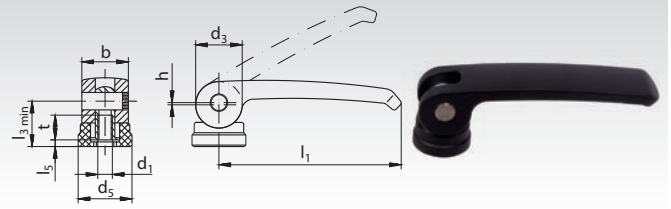

Product No. Version A	Product No. Version B	l_1 mm	d_1 mm	b mm	d_3 mm	d_4 mm	d_5 mm	h mm	l_3 min. mm	l_3 max. mm	l_4 mm	l_5 min. mm	t mm	Weight g
665 763 10	**665 763 20**	63	M6	16	16	19	18,5	0,75	16,3	18,8	2,5	3	10	56
665 782 10	**665 782 20**	82	M8	20	20	25	22,5	1	19,5	22,5	3	3,7	12	108

Eccentric clamps 927 with external thread

Materials: Lever: Zinc die cast, with wear-resistant epoxy resin coating, black matt.
Knurled setting nut version A and threaded bolt: Zinc-plated steel, chromated.
Contact plate version A: Polyacetal (POM), glass-fibre reinforced, black matt.
Contact plate version B: Polyamid (PA), glass-fibre reinforced, black matt

Version A: With adjustable contact plate, with knurled setting nut with fine thread. Thus the clamping force and the lever position can be set exactly on the lever side.

Version B: Non-adjustable support washer. The clamping force, can either be set on the lever side by turning the lever, or on the backside by adjusting the nut/knurled nut if present.

- For rapid clamping and loosening by hand.
- Clamping is made without generating a torque.
- Clamping force is up to 8 kN.

Ordering Details: e.g.: Product No. 665 763 11, Eccentric Clamp Version A, Length 63mm, M6x 20

Version A

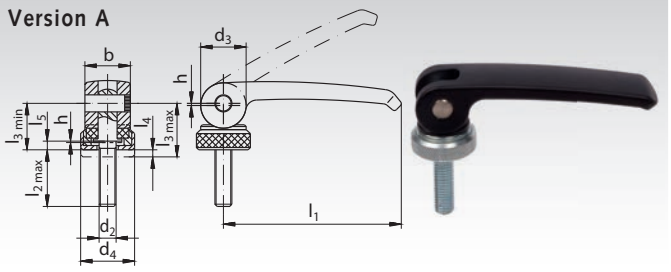

Version B

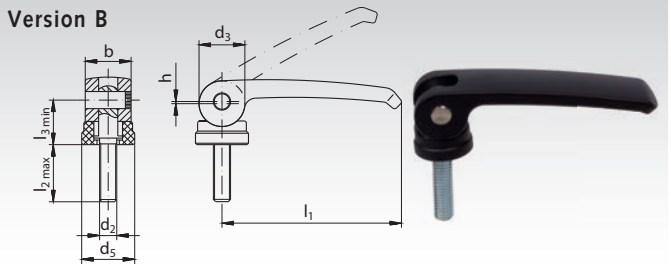

Product No. Version A	Product No. Version B	l_1 mm	d_2 mm	l_2 mm	b mm	d_3 mm	d_4 mm	d_5 mm	h mm	l_3 min. mm	l_3 max. mm	l_4 mm	l_5 min. mm	Weight g
665 763 11	**665 763 21**	63	M6	20	16	16	19	18,5	0,75	16,3	18,8	2,5	3	62
665 763 12	**665 763 22**	63	M6	25	16	16	19	18,5	0,75	16,3	18,8	2,5	3	63
665 763 13	**665 763 23**	63	M6	30	16	16	19	18,5	0,75	16,3	18,8	2,5	3	64
665 763 14	**665 763 24**	63	M6	35	16	16	19	18,5	0,75	16,3	18,8	2,5	3	65
665 763 15	**665 763 25**	63	M6	40	16	16	19	18,5	0,75	16,3	18,8	2,5	3	66
665 763 16	**665 763 26**	63	M6	50	16	16	19	18,5	0,75	16,3	18,8	2,5	3	68
665 782 11	**665 782 21**	82	M8	25	20	20	25	22,5	1	19,5	22,5	3	3,7	122
665 782 12	**665 782 22**	82	M8	30	20	20	25	22,5	1	19,5	22,5	3	3,7	124
665 782 13	**665 782 23**	82	M8	35	20	20	25	22,5	1	19,5	22,5	3	3,7	126
665 782 14	**665 782 24**	82	M8	40	20	20	25	22,5	1	19,5	22,5	3	3,7	128
665 782 15	**665 782 25**	82	M8	50	20	20	25	22,5	1	19,5	22,5	3	3,7	132
665 782 16	**665 782 26**	82	M8	60	20	20	25	22,5	1	19,5	22,5	3	3,7	136

Clamp Nuts DIN 99 St Made from Steel or Stainless Steel

Material Version N: Steel burnished.

Material Stainless: Stainless steel 1.4305, matt finish blasted.

Handle slanted, with metric thread.

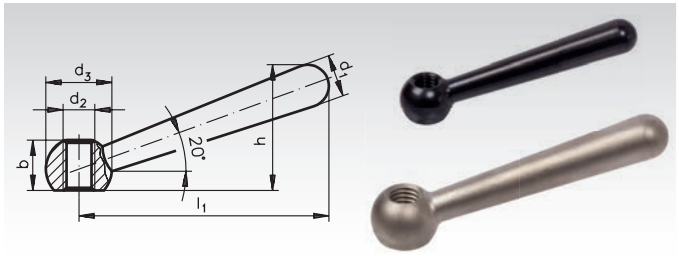

Ordering Details: e.g.: Product No. 665 106 00, Clamp Nut DIN 99, 8 mm

Product No. Version N	Product No. Stainless	d_1 mm	Thread mm	d_3 mm	l_1 mm	h mm	b mm	Weight g
665 106 00	**665 991 06**	8	M6	12	48	24	9,5	17
665 108 00	**665 991 08**	10	M8	16	60	30,5	12	38
665 110 00	**665 991 10**	13	M10	20	76	38	14,5	76
665 112 00	**665 991 12**	16	M12	25	95	47	18,5	144
665 116 00	**665 991 16**	20	M16	32	119	59,5	24	283
665 120 00	-	25	M20	40	152	76	30	561
665 124 00	-	32	M24	50	190	97	40	1116

Adjustable Clamping Levers 119 St

Material: Steel burnished.

Version N = handle slanted, with metric thread.
Use: In applications where either the clamping range is limited or where a specific lever position is required. The serrated bore in the spherical hub is fitted with a threaded-bolt insert, which engages in the hub with its own serrations.
By depressing the clamping lever, the serrations are disengaged, freeing it for re-positioning in the most convenient position. When releasing the lever, the serrations re-engage automatically. Should a rotation of 360° not be possible, the insert can be slightly screwed in (after the lever has been disengaged) by means of the slotted knurled screw.

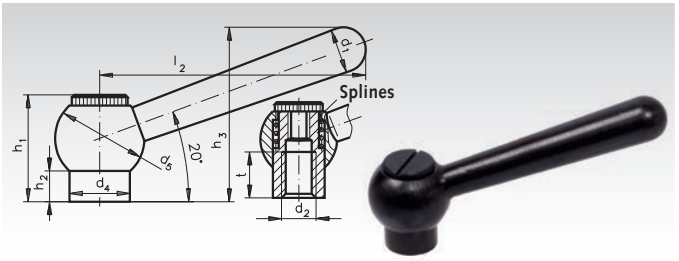

Ordering Details: e.g.: Product No. 665 508 00, Adjustable Clamping Lever 119 St, 10 mm

Product No. Version N	d_1 mm	d_2 mm	d_4 mm	d_5 mm	h_1 mm	h_2 mm	h_3 mm	l_2 mm	t mm	Weight g
665 508 00	10	M8	13,5	20	25	8	39,5	60	12	59
665 510 00	13	M10	16	25	29	8	49,5	76	15	118
665 512 00	16	M12	19	28	33,5	10,5	60,5	95	18	188

Clamp Nuts 202 Tg Made from Steel or Stainless Steel

Material Version N: Cast steel.

Material Stainless: Stainless steel 1.4308, matt finish blasted.

Deburred, contact surface machined. Simple and cost efficient clamping elements.

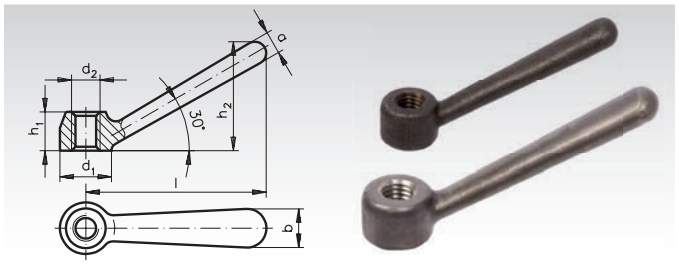

Ordering Details: e.g.: Product No. 665 308 00, Clamp Nut 202 Tg, version N, 16 mm

Product No. Version N	Product No. Stainless	d_1 mm	d_2 mm	a mm	b mm	h_1 mm	h_2 ca. mm	l ca. mm	Weight g
665 308 00	**665 993 08**	16	M8	7	12	12	34	56	30
665 310 00	**665 993 10**	20	M10	9	14	14	42,5	70	60
665 312 00	**665 993 12**	25	M12	11	18	18	53	87	125
665 316 00	**665 993 16**	32	M16	15	22	22	66,5	109	248
665 320 00	**665 993 20**	40	M20	18	28	28	84,5	140	419

Cylindrical Clamp Nuts, Steel or Stainless Steel

Material: Steel zinc plated (glossy),
or stainless steel 1.4305, blasted, matt finish finish.

Shaft butt-welded on.

These clamp nuts are a modified version of the common ball knobs DIN 99. Material-saving design. Cost-efficient clamping element by rationalised production process.

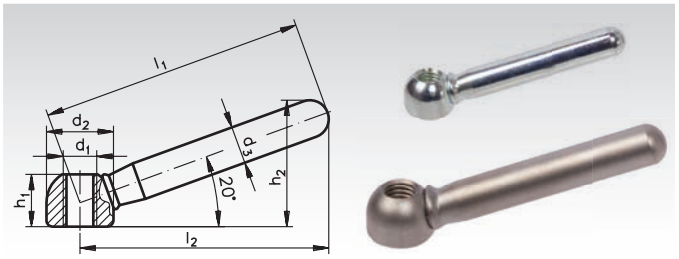

Ordering Details: e.g.: Product No. 665 408 00, Cylindrical Clamp Nuts, Steel. M8

Product No. Steel	Product No. Stainless Steel	Length l_1 mm	d_1 mm	d_2 mm	d_3 mm	h_1 mm	h_2 mm	l_2 mm	Weight g
665 408 00	**665 994 08**	63	M8	16	9	12,5	30,5	60	39
665 410 00	**665 994 10**	80	M10	20	11	15	37	76	75
665 412 00	**665 994 12**	100	M12	25	14	19	46	95	147
665 416 00	**665 994 16**	125	M16	32	18	25	58,5	119	309
665 420 00	**665 994 20**	160	M20	40	20	31	73	152	526

Clamping Nuts with Double Lever, Steel or Stainless Steel

Material: Steel zinc plated (glossy),
or stainless steel 1.4305, blasted, matt finish finish.

Shaft butt-welded on.

Material-saving design. Cost-efficient clamping element by rationalised production process.

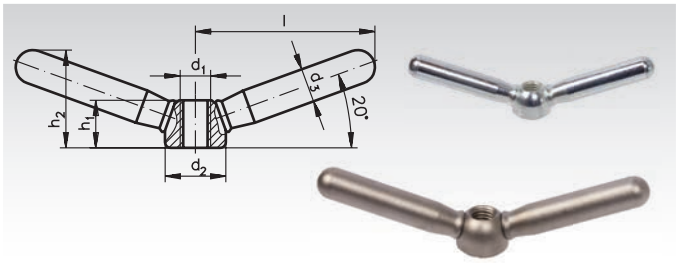

Ordering Details: e.g.: Product No. 665 458 00, Clamping Nut with Double lever, Steel. M8

Product No. Steel	Product No. Stainless Steel	l mm	d_1 mm	d_2 mm	d_3 mm	h_1 mm	h_2 mm	Weight g
665 458 00	**665 994 58**	47,5	M8	16	9	12,5	26	50
665 460 00	**665 994 60**	59,5	M10	20	11	15,0	32	100
665 462 00	**665 994 62**	75,5	M12	25	14	19,0	40	212
665 466 00	**665 994 66**	94,5	M16	32	18	25,0	52	435
665 470 00	**665 994 70**	118,0	M20	40	20	31,0	62	710

Control Levers 223 St

Material: Steel, precision turned and burnished.
Ball knob made from plastic.

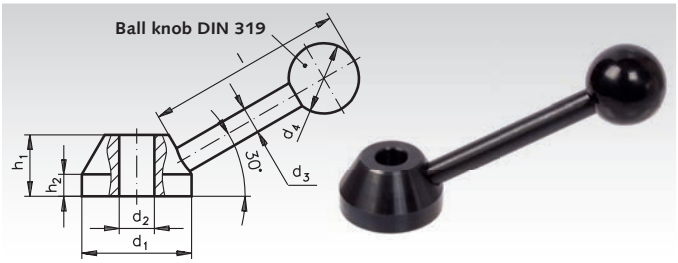

Ordering Details: e.g.: Product No. 666 132 00, Control Lever 223 St

Product No.	d_1 mm	d_2^{H7} mm	d_3 mm	d_4 mm	h_1 mm	h_2 mm	l mm	Weight g
666 132 00	32	10	8	20	18	6,5	62	103
666 140 00	40	12	10	30	22	8,5	95	214
666 152 00	52	16	14	40	28	11	136	503

Control Levers with Long Hub 2120 St

Material: Steel, precision turned and burnished.
Ball knob made from plastic.

Version E = lever slanted with thread.

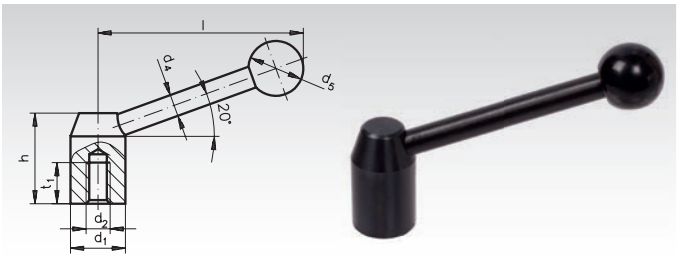

Ordering Details: e.g.: Product No. 666 420 00, Control Lever 2120 St, Version E, 20 mm

Product No. Version E	d_1 mm	d_2 mm	d_4 mm	d_5 mm	h mm	l mm	t_1 mm	Weight g
666 420 00	20	M8	8	20	33	70	15	94
666 422 00	22	M10	8	20	37	82	15	118
666 425 00	25	M12	10	25	42	96	18	182
666 428 00	28	M12	12	30	47	110	18	274
666 432 00	32	M16	12	32	52	124	23	352
666 436 00	36	M16	14	35	58	138	24	525
666 440 00	40	M20	16	40	64	152	27	709
666 445 00	45	M20	16	40	71	170	30	949



Reworking within 24h-service possible. Custom made parts on request.

Cabinet "U" Handles 525

Material: Plastic Duroplast PF31, black glossy finish, flash mark thoroughly polished.

A special feature is that the flash mark on this handle is not visible nor can it be felt. The large tube diameter and the brass threaded bush lead to an immense rigidity.

Temperature resistant up to 110°C.

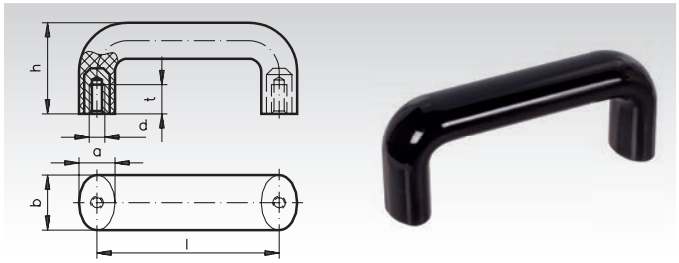

Ordering Details: e.g.: Product No. 666 601 00, Cabinet "U" Handle 525, 86 mm

Product No.	Length l mm	a mm	b mm	d mm	h mm	t mm	Weight g
666 601 00	$86^{\pm 0,5}$	17	26	M6	43	12	85
666 602 00	$117^{\pm 0,5}$	20	30	M8	54	13	138
666 603 00	$179^{\pm 1}$	20	30	M8	62	13	185

Cabinet "U" Handles 725 Made from Polypropylene or Polyamide

Material:
Version Plastic PP: Thermoplast Polypropylene, glass-fibre reinforced, black, matt.
Cost efficient. Temperature resistant up to 100°C.

Version Plastic PA HT: Thermoplast Polyamide, glass-fibre reinforced, black, matt.
Temperature resistant up to 200° C.

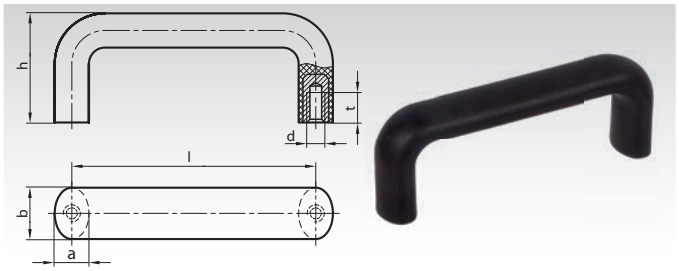

Ordering Details: e.g.: Product No. 666 601 01, Cabinet "U" Handle 725 PP, 86 mm

Product No. PP	Product No. PA HT	Length l mm	a mm	b mm	d mm	h mm	t mm	Weight g
666 601 01	**666 602 01**	$86^{\pm 0,5}$	14	23	M6	44	12	46
666 601 02	**666 602 02**	$117^{\pm 0,5}$	15	25	M6	49	12	69
666 601 03	**666 602 03**	$117^{\pm 0,5}$	15	25	M8	49	13	69
666 601 04	**-**	$120^{\pm 0,5}$	15	25	M8	49	13	74
666 601 05	**-**	$132^{\pm 0,5}$	16	26	M8	54	13	83
666 601 06	**-**	$150^{\pm 1}$	16	27	M8	56	13	95
666 601 07	**666 602 07**	$179^{\pm 1}$	16	27	M8	57	13	108
666 601 08	**-**	$300^{\pm 1}$	20	32	M10	64	17	205

Cabinet "U" Handles 528 Made from Polypropylene or Polyamide

Material:
Version Plastic PP: Thermoplast Polypropylene, glass-fibre reinforced, black, matt.
Cost efficient. Temperature resistant up to 100°C.

Version Plastic PA: Thermoplast Polyamide, glass-fibre reinforced, black, matt.
Temperature resistant up to 150° C.

Cabinet handles 528 are mounted from the operating side with socket-head cap screws.

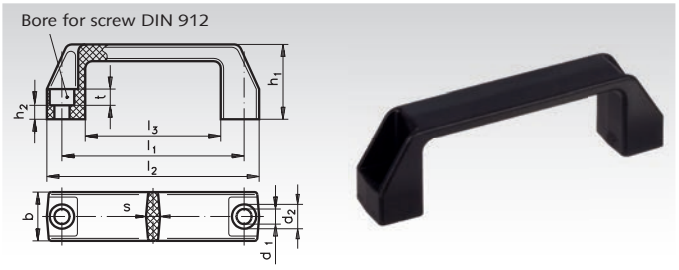

Ordering Details: e.g.: Product No. 666 540 00, Cabinet "U" Handle 528 PP, 94 mm

Product No. PP	Product No. PA	Length l_1 mm	b mm	d_1 mm	d_2 mm	h_1 mm	h_2 mm	l_2 mm	l_3 mm	s mm	t mm	Weight g
666 540 00	**666 530 00**	94^{-1}	21	6,5	10,5	38	6	109	74	6	7,0	26
666 542 00	**666 532 00**	$117^{\pm 1}$	26	8,5	13,5	41	6,5	137	93	7	8,5	44
666 544 00	**666 534 00**	$132^{\pm 1}$	27	8,5	13,5	45	7,5	150	108	7	8,5	47
666 546 00	**666 536 00**	$179^{\pm 1}$	28	8,5	13,5	50	8,5	196	151	7,5	8,5	70
666 548 00	**666 538 00**	$235^{\pm 1}$	30	10,5	16,5	54	9,5	260	201	8,5	10,5	118

Cabinet "U" Handles 565

Material: Aluminium, plastic coated, matt finish black RAL 9011.
Made from drawn aluminium. Smooth surface and rigid design.

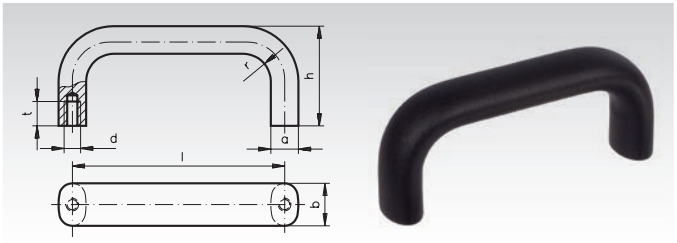

Ordering Details: e.g.: Product No. 666 633 00, Cabinet "U" Handle 565, 100 mm

Product No.	Length l mm	a mm	b mm	d mm	h mm	r mm	t mm	Weight g
666 633 00	100	13	20	M6	47	13	10	87
666 635 00	112	13	20	M6	49	13	10	97
666 637 00	128	13	20	M6	51	13	10	107
666 640 00	160	13	20	M6	51	13	10	127
666 645 00	112	17	26	M8	53	17	12	160
666 647 00	128	17	26	M8	55	17	12	183
666 649 00	160	17	26	M8	57	17	12	211
666 652 00	192	17	26	M8	57	17	12	245
666 656 00	300	17	26	M8	57	17	12	350
666 658 00	400	17	26	M8	57	17	12	445

Cabinet "U" Handles 565.1

Material: Aluminium plastic coated, matt finish, black RAL 9011.
Made from drawn aluminium. Smooth surface and rigid design.
To be mounted from the operating side.

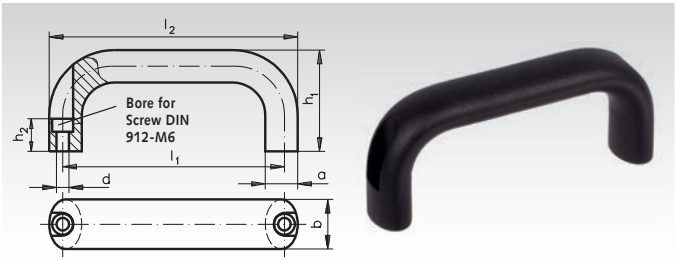

Ordering Details: e.g.: Product No. 666 660 00, Cabinet "U" Handle 565.1, 116 mm

Product No.	l_1 mm	a mm	b mm	d mm	h_1 mm	h_2 mm	l_2 mm	r mm	Weight g
666 660 00	116	17	26	6,4	55	17	130	17	147
666 662 00	132	17	26	6,4	55	17	146	17	163
666 664 00	164	17	26	6,4	57	17	178	17	197
666 666 00	196	17	26	6,4	57	17	210	17	229

Cabinet "U" Handles 565.2

Material: Aluminium, plastic coated, matt finish, black RAL 9011.
Made from drawn aluminium. Smooth surface and rigid design.
The angled contact surface allows improved access even in confined spaces such as corners. "tactile friendliness" by epoxy coating.

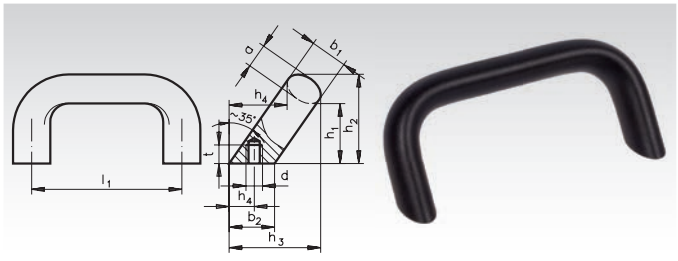

Ordering Details: e.g.: Product No. 666 860 00, Cabinet "U" Handle 565.2, 112 mm

Product No.	l_1 mm	a mm	b_1 mm	b_2 mm	d mm	h_1 mm	h_2 mm	h_3 mm	$h_4{}^{+1}$ mm	r mm	t mm	Weight g
666 860 00	112	13	20	24	M6	32	48	50	13,5	13	10	100
666 862 00	128	13	20	24	M6	32	48	50	13,5	13	10	112
666 864 00	128	17	26	32	M8	34	54	57	18	17	12	192
666 866 00	160	17	26	32	M8	34	54	57	18	17	12	225

Cabinet "U" Handles 426

Material: Aluminium plastic coated, matt finish black RAL 9005.

Handles d_1 = 20 mm are drawn from aluminium extrusions.

Handles d_1 = 28 mm are produced from aluminium tube with a wall thickness of 4 mm with threaded bush from aluminium.

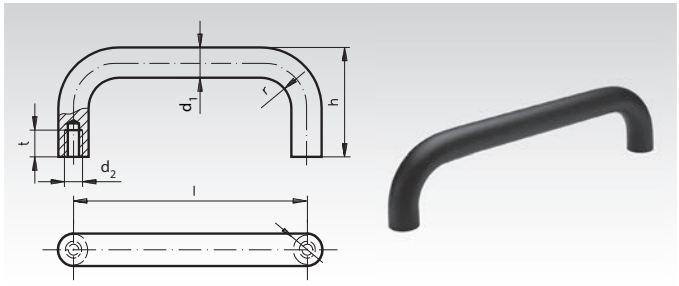

Ordering Details: e.g.: Product No. 666 669 01, Cabinet "U" Handle 426, 200 mm

Product No.	Length l mm	d_1 mm	d_2 mm	h mm	r mm	$t_{min.}$ mm	Weight g
666 669 01	200	20	M8	68	22	15	238
666 669 02	250	20	M8	68	22	15	280
666 669 03	300	20	M8	68	22	15	330
666 669 04	350	20	M8	68	22	15	375
666 669 05	250	28	M10	78	32	15	290
666 669 06	300	28	M10	78	32	15	330
666 669 07	350	28	M10	78	32	15	375
666 669 08	400	28	M10	78	32	15	415

Cabinet "U" Handles 426.1

Material: Aluminium plastic coated, matt finish black RAL 9005.

Handles d_1 = 20 mm are drawn from aluminium extrusions.

Handles d_1 = 28 mm are produced from aluminium tube with a wall thickness of 4 mm. Threaded bush aluminium.

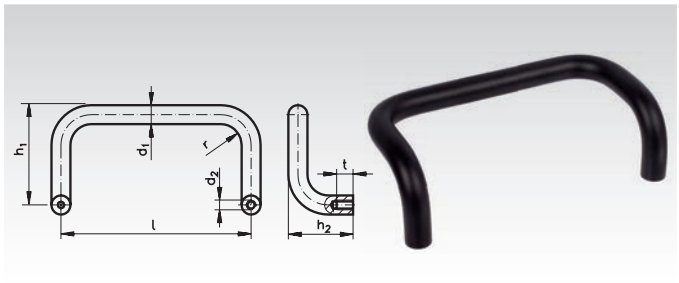

Ordering Details: e.g.: Product No. 666 670 00, Cabinet "U" Handle 426.1, 200 mm

Product No.	Length l mm	d_1 mm	d_2 mm	h_1 mm	h_2 mm	r mm	t mm	Weight g
666 670 00	200	20	M8	105	68	22	15	380
666 672 00	300	20	M8	105	68	22	15	475
666 674 00	250	28	M10	120	78	32	15	430
666 676 00	350	28	M10	120	78	32	15	505
666 678 00	500	28	M10	120	78	32	15	628

Arch Handles

Material: Aluminium, natural colour, anodized or plastic coated, matt finish black RAL 9005.

These arched handles are noted for their elegant design.

The well-proven elliptical profile has been used again.

Type A: Mounting from the back.
Type B: Mounting from the operating side.

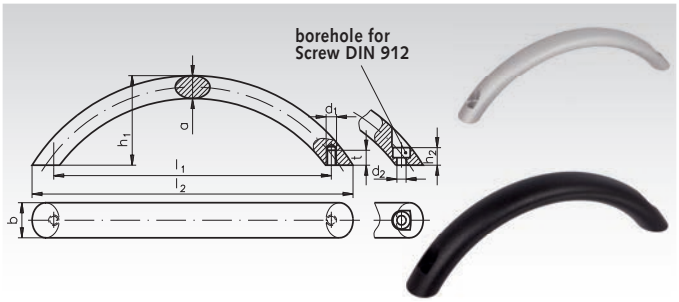

Ordering Details: e.g.: Product No. 666 844 00, Arch Handle Aluminium

Product No. alu colour	Product No. black	Type	b mm	l_1 mm	l_2 ca. mm	a mm	d_1 mm	d_2 mm	h_1 mm	h_2 mm	$t_{min.}$ mm	Weight g
666 844 00	**666 840 00**	A	20	160	185	13	M6	-	51	-	8,5	106
666 845 00	**666 841 00**	A	20	192	221	13	M6	-	51	-	8,5	130
666 846 00	**666 842 00**	A	26	160	190	17	M8	-	57	-	12	116
666 847 00	**666 843 00**	A	26	192	227	17	M8	-	57	-	12	140
666 854 00	**666 850 00**	B	20	160	185	13	-	5,3	51	10	-	106
666 855 00	**666 851 00**	B	20	192	221	13	-	5,3	51	10	-	130
666 856 00	**666 852 00**	B	26	160	190	17	-	6,4	57	12	-	116
666 857 00	**666 853 00**	B	26	192	227	17	-	6,4	57	12	-	140

Cabinet "U" Handles 425 from Steel or Stainless Steel

Material: Version CR: Steel, chrome plated.
Washers zinc die-cast, nickel plated.

Version NI: Stainless steel 1.4305, blasted, matt finish. Washers stainless steel 1.4305.

STAINLESS

Supplied with two washers. These discs guarantee perfect positioning even with large bores in the cabinet. The washers are loosely packed.

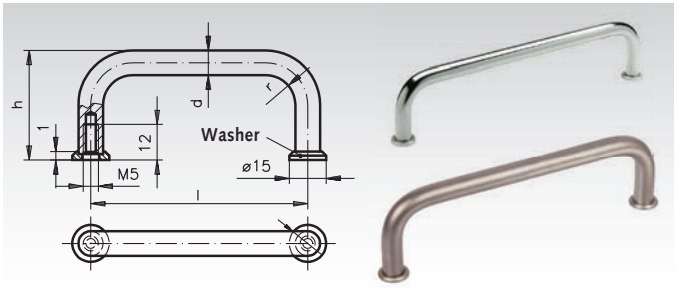

Ordering Details: e.g.: Product No. 666 612 00, Cabinet "U" Handle 425, CR, 88 mm

Product No. Version CR	Product No. Version NI	Length l mm	d mm	h mm	r mm	Weight g
666 612 00	**666 996 12**	88	10	42	12	89
666 614 00	**666 996 14**	100	10	42	12	96
666 616 00	**666 996 16**	120	10	42	12	108
666 619 00	**666 996 19**	180	10	42	12	148
666 621 00	**666 996 21**	200	10	42	12	160
666 623 00	**666 996 23**	235	10	42	12	181

Folding Handles Made from Steel or Stainless Steel

Material: Version CR: Steel, chrome plated.
Version NI: 1.4305, blasted, matt finish.

STAINLESS

Mainly used in applications where the handle should not stick out, or where sticking out should be kept to a minimum. The handle is locked in both end positions by a spring-loaded pressure pin. Hexagon nuts and washers are included in the delivery.

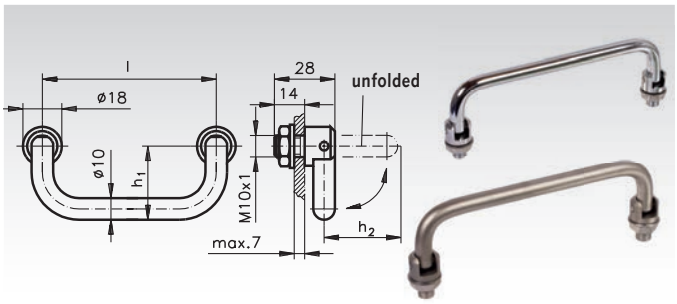

Ordering Details: e.g.: Product No. 666 680 00, Folding Handle, Steel, Chrome Plated

Product No. Version CR	Product No. Version NI	Length l mm	h_1 mm	h_2 mm	Weight g
666 680 00	**666 996 80**	100	34	44	150
666 682 00	**666 996 82**	120	34	44	161
666 688 00	**666 996 88**	180	34	44	195

Folding Handle with Recessed Tray 425.4

Material:
Folding handle made from steel, chrome plated. Tray: Zinc die-cast, plastic coated, black.

Used in applications where the folded handle must not stick out, or where the sticking out must be max. 3 mm. In addition, screws M4 are sufficient for mounting the handle on the housing. Handle and folding mechanism are made from chrome-plated steel and the tray is made from zinc die-cast. This gives the folding handle additional strength (supplied as complete assembly).

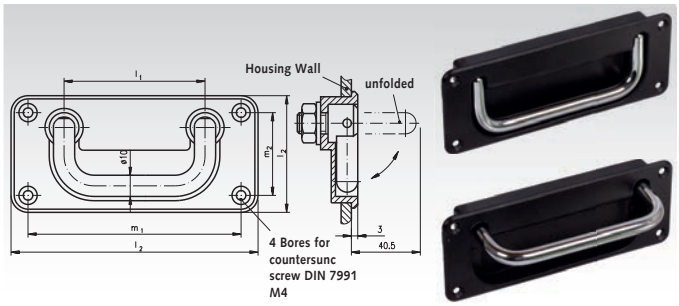

Ordering Details: e.g.: Product No. 666 550 00, Folding Handle with Recessed Tray

Product No.	Length l_1 mm	l_2 mm	l_3 mm	m_1 mm	m_2 mm	Weight g
666 550 00	120	170	65	154	49	402

Tubular Handles 333, with Inclined Feet, Aluminium

Material: Grip tube Ø28mm x 1.5 mm made from Aluminium. Either natural coloured anodised or black plastic coated RAL 9005 matt.
Feet made from zinc die cast, black plastic coated RAL 9005 matt.

High stability for small sizes. Tube either aluminium silver or black. Grip tube fixed against turning with screws on the face ends (screws below bright grey removable plastic caps).

Other sizes on request.

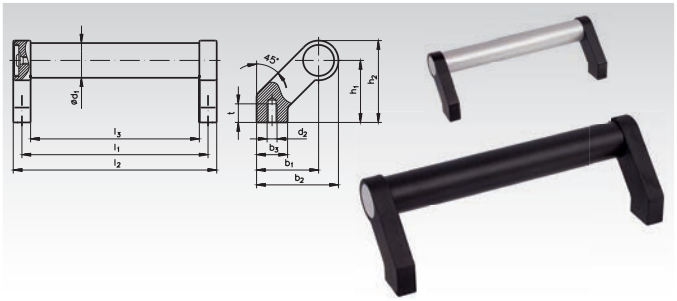

Ordering Details: e.g.: Product No. 666 505 02, Tubular handle 333, aluminium colour, length 200mm

Product No. alu colour	Product No. black	$l_1^{+0,5}$ mm	d_1 mm	d_2 mm	b_1 mm	b_2 mm	b_3 mm	h_1 mm	h_2 mm	l_2 mm	l_3 mm	$t_{min.}$ mm	Weight g
666 505 02	**666 505 22**	200	28	M8	50	66	25	50	66	214	186	15	432
666 505 04	**666 505 24**	250	28	M8	50	66	25	50	66	264	236	15	455
666 505 06	**666 505 26**	300	28	M8	50	66	25	50	66	314	286	15	470
666 505 08	**666 505 28**	400	28	M8	50	66	25	50	66	414	386	15	530
666 505 10	**666 505 30**	500	28	M8	50	66	25	50	66	514	486	15	575
666 505 12	**666 505 32**	600	28	M8	50	66	25	50	66	614	586	15	620

Tubular Handles 333.1, with Straight Feet, Aluminium

Material: Grip tube Ø20mm / Ø28mm x 1.5mm made from Aluminium. Either natural coloured anodised or black plastic coated RAL 9005 matt.
Feet made from zinc die cast, black plastic coated RAL 9005 matt.

High stability for small sizes. Tube either aluminium silver or black. Grip tube fixed against turning with screws on the face ends (screws below bright grey removable plastic caps).

Other sizes on request.

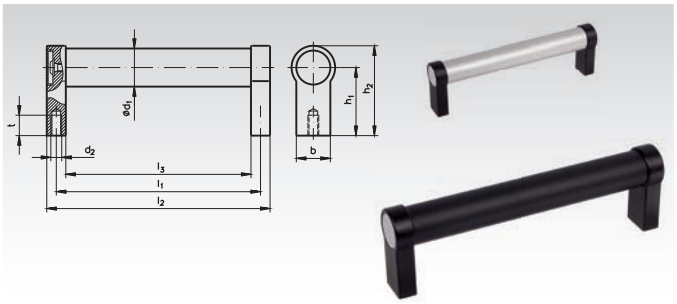

Ordering Details: e.g.: Product No. 666 505 02, Tubular handle 333.1, aluminium colour, length 180mm

Product No. alu colour	Product No. black	$l_1^{+0,2}$ mm	d_1 mm	d_2 mm	b mm	h_1 mm	h_2 mm	l_2 mm	l_3 mm	$t_{min.}$ mm	Weight g
666 505 42	**666 505 72**	180	20	M6	24	42	54	192	168	12	190
666 505 44	**666 505 74**	200	20	M6	24	42	54	212	188	12	200
666 505 46	**666 505 76**	250	20	M6	24	42	54	262	238	12	225
666 505 48	**666 505 78**	300	20	M6	24	42	54	312	288	12	250
666 505 50	**666 505 80**	400	20	M6	24	42	54	412	388	12	300
666 505 52	**666 505 82**	200	28	M8	25	50	66	214	186	15	340
666 505 54	**666 505 84**	250	28	M8	25	50	66	264	236	15	360
666 505 56	**666 505 86**	300	28	M8	25	50	66	314	286	15	380
666 505 58	**666 505 88**	400	28	M8	25	50	66	414	386	15	440
666 505 60	**666 505 90**	500	28	M8	25	50	66	514	486	15	480
666 505 62	**666 505 92**	600	28	M8	25	50	66	614	586	15	520

Tubular Handles 335, with Straight Feet, Stainless Steel

Material: Grip tube Ø28mm x 2 mm made from Stainless Steel 1.4305, silk matt gloss, ground.
Feet made from stainless steel, precision cast 1.4308, matt blasted.

Very high stability for small sizes.
Connection between tube and foot is sealed against water spray.

Other sizes on request.

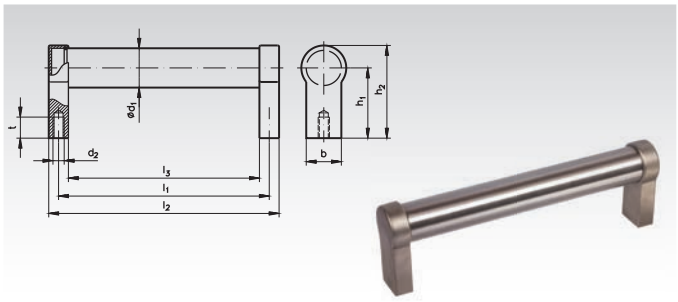

Ordering Details: e.g.: Product No. 666 995 52, Tubular handle 335, length 200 mm

Product No. stainless	l_1^{+1} mm	d_1 mm	d_2 mm	b mm	h_1 mm	h_2 mm	l_2 mm	l_3 mm	$t_{min.}$ mm	Weight g
666 995 52	200	28	M8	25	50	66	214	186	15	500
666 995 54	250	28	M8	25	50	66	264	236	15	565
666 995 56	300	28	M8	25	50	66	314	286	15	630
666 995 58	400	28	M8	25	50	66	414	386	15	760
666 995 60	500	28	M8	25	50	66	514	486	15	890
666 995 62	600	28	M8	25	50	66	614	586	15	1020

Tri-Ball Handles 2140

Material: Steel, zinc plated, with handle DIN 39.
With through hole d_1^{H7}

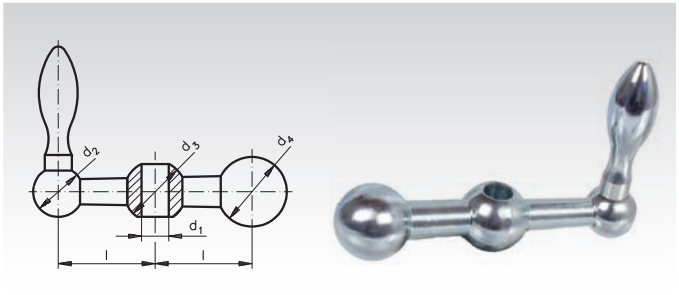

Ordering Details: e.g.: Product No. 667 425 00, Tri-Ball Handles 2140, Version A, 25 mm

Product No.	l mm	d_1^{H7} mm	d_2 mm	d_3 mm	d_4 mm	$t_{min.}$ mm	Handle-Ø mm	Weight g
667 425 00	25	7	13	16	18	11	10	60
667 434 00	34	8	16	20	22	15	14	136
667 441 00	41	10	18	23	25	17	16	194
667 450 00	50	12	20	26	28	19	18	283

Cranked Handles DIN 468 Tg

Material: Cast iron, plastic coated, black.
Handle made from Steel, zinc plated.

Hand cranks: Square hole reamed true to gauge.
Hub: Machined, cast iron burr precisely ground, sand blasted.

Version F = with fixed handle.
Version D = with revolving handle.

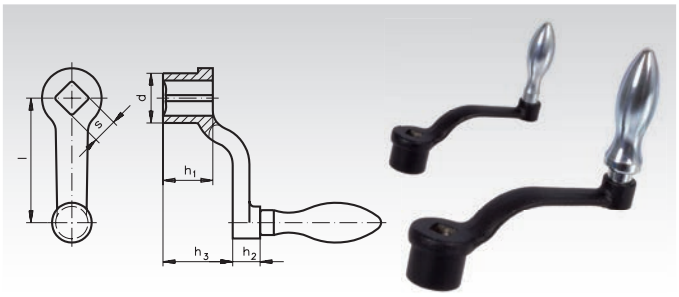

Ordering Details: e.g.: Product No. 668 008 00, Cranked Handle DIN 468 Tg, Version F, 80 mm

Product No. Version F	Product No. Version D	l mm	s^{H11} mm	d mm	h_1 mm	h_2 mm	h_3 mm	Grip-Ø mm	Weight Vers. F g	Weight Vers. D g
668 008 00	**668 208 00**	80	10	24	24	13	38	18	183	195
668 010 00	**668 210 00**	100	12	28	28	13	48	20	281	295
668 012 00	**668 212 00**	125	14	34	34	14	55	22	434	448
668 016 00	**668 216 00**	160	17	38	38	14	65	25	650	664
668 020 00	**668 220 00**	200	19	44	44	21	78	28	999	1022
668 025 00	**668 225 00**	250	22	48	48	21	90	32	1427	1435
668 031 00	**668 231 00**	315	24	54	54	26	105	36	2123	2168

Cranked Handles DIN 469 Tg

Material: Cast iron, plastic coated, black.
Handle made from Steel, zinc plated.

Hand cranks: Square hole reamed true to gauge.
Hub: Machined, cast iron burr precisely ground, sand blasted.

Version F = with fixed handle.
Version D = with revolving handle.

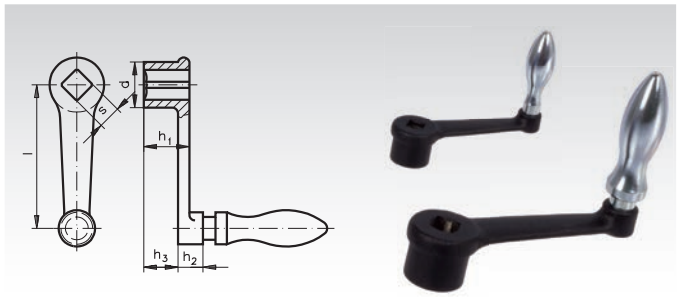

Ordering Details: e.g.: Product No. 669 008 00, Cranked Handle DIN 469 Tg, Version F, 80 mm

Product No. Version F	Product No. Version D	l mm	s^{H11} mm	d mm	h_1 mm	h_2 mm	h_3 mm	Grip-Ø mm	Weight Vers. F g	Weight Vers. D g
669 008 00	**669 208 00**	80	10	24	24	13	18	18	179	191
669 010 00	**669 210 00**	100	12	28	28	13	21	20	271	285
669 012 00	**669 212 00**	125	14	34	34	14	26	22	434	448
669 016 00	**669 216 00**	160	17	38	38	14	29	25	642	652
669 020 00	**669 220 00**	200	19	44	44	21	34	28	998	1021
669 025 00	**669 225 00**	250	22	48	48	21	36	32	1332	1340



Reworking within 24h-service possible. Custom made parts on request.

Cranked Handles 471

Material: Crank body made from aluminium.
Revolving cylindrical handle: Plastic black.

Modern design.

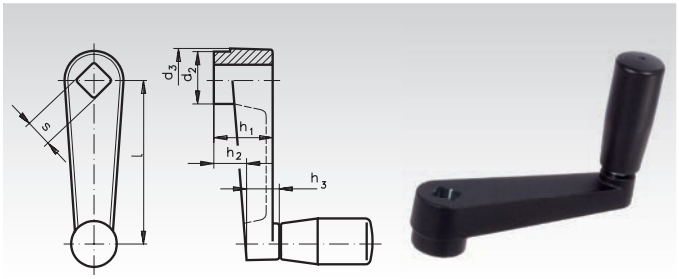

Ordering Details: e.g.: Product No. 667 306 00, Hand Crank 471, 64 mm

Product No.	l mm	s^{H11} mm	d_2 mm	d_3 mm	h_1 mm	h_2 mm	h_3 mm	Cyl.Grip-Ø mm	Weight g
667 306 00	64	10	19	22	20	11	12	18	97
667 308 00	80	10	23	26	24	14	14	21	166
667 310 00	100	12	27	30	28	17	15	23	251
667 312 00	125	14	32	35	34	22	18	26	270
667 316 00	160	17	35	39	38	26	18	26	313

Cranked Handles 569

Material: Plastic Thermoplast reinforced
Crank body made from plastic. Hub insert: steel, burnished, brass-threaded bush for screwing in the cylindrical handle. Cylindrical handle made from black plastic and revolving. The protruding steel bush ensures an accurate bore and a flush fit of the bore face. It can be retained with a pin or a retaining screw.

Version B = with bore $d1^{H7}$

Version V = with square bore s^{H11}

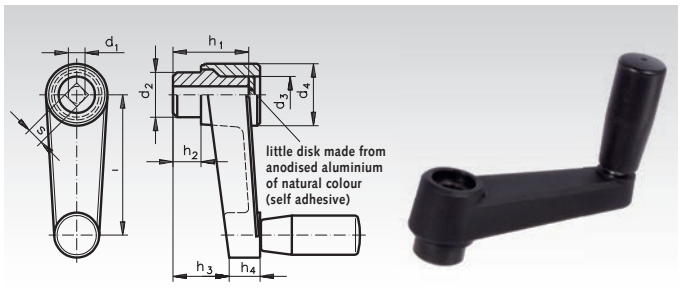

Ordering Details: e.g.: Product No. 667 106 00, Cranked Handles 569, Version B, 64 mm

Product No. Version B	Product No. Version V	l mm	d_1^{H7} mm	s^{H11} mm	d_2 mm	d_3 mm	d_4 mm	h_1 mm	h_2 mm	h_3 mm	h_4 mm	Grip Ø mm	Grip length mm	Weight Version B g	Weight Version V g
667 106 00	**667 206 00**	64	10	10	18	16	27	29	10	20	13	18	42,5	88	63
667 108 00	**667 208 00**	80	10	10	22	17	30	32	10	23	13	21	52,5	132	103
667 110 00	**667 210 00**	100	12	12	24	21	34	37	10	25	16	23	67,5	220	185
667 113 00	**667 213 00**	130	14	14	28	24	40	44	14	34	16	26	82,5	320	260
667 116 00	-	160	16	17	34	27	45	49	15	38	18	28	92,5	442	370

Turret Levers 2130 St

Material: Steel, precision turned and burnished.
Ball knobs made from plastic.

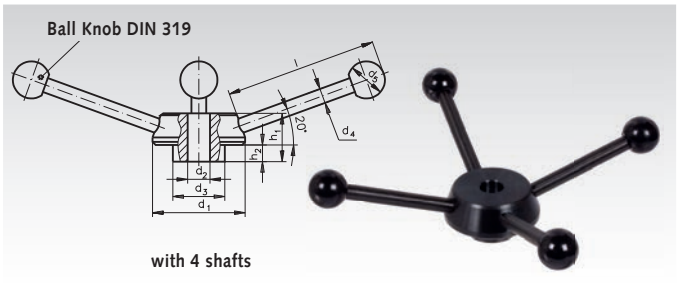

Ordering Details: e.g.: Product No. 666 512 00, Turret Lever 2130 St, 50 mm

Product No.	d_1 mm	d_2^{H7} mm	d_3 mm	d_4 mm	d_5 mm	h_1 mm	h_2 mm	l mm	Weight g
666 512 00	50	12	28	8	20	26	9	82	382
666 514 00	55	14	30	10	25	28	10	96	544
666 515 00	60	15	32	10	25	30	11	96	633
666 516 00	65	16	35	12	30	32	12	110	848
666 518 00	72	18	40	12	32	36	14	124	1097
666 520 00	80	20	44	14	35	40	16	138	1531



Reworking within 24h-service possible. Custom made parts on request.

Handwheels Stainless Steel

Material: Wheel body: Stainless steel plate 1.4301.
Hub: Welded on, matt blasted.
At version B: Handle Duroplast PF31, black, glossy finish. Spindle: Stainless steel 1.4305.

Hub lengths comply with DIN 950. High mechanical strength, insensitive to blows and impacts.

Version A: Without cylindrical handle.
Version B: With revolving cylindrical handle.

Keyway available at extra charge.

Ordering Details: e.g.: Product No. 670 999 16, Handwheel, Diameter 160 mm

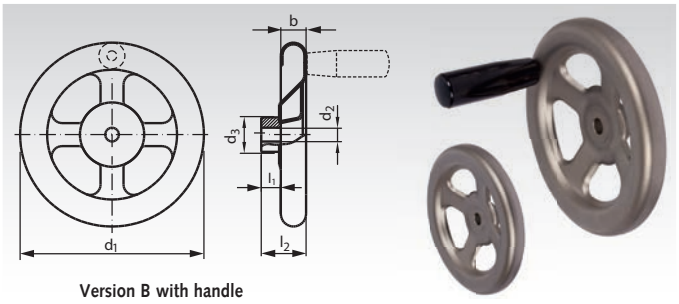

Version B with handle

Product No. Version A	Product No. Version B	d_1 mm	d_2^{H9} mm	b mm	d_3 mm	l_1 mm	l_2 mm	Cyl. Grip-Ø mm	Grip-length mm	No. of spokes pcs.	Sheet gauge mm	Weight Vers. A g	Weight Vers. B g
670 999 16	**670 994 16**	160	12	22	30	20	39	26	83	4	2	430	540
670 999 20	**670 994 20**	200	14	22	40	24	44	26	83	4	2,5	824	935
670 999 25	**670 994 25**	250	17	30	45	28	52	28	93	5	3	1477	1600
670 999 32	**670 994 32**	315	19	36	55	33	64	28	93	5	3	2330	2400
670 999 40	**670 994 40**	400	24	43	65	38	81	28	93	5	3	4210	4300

Handwheels Stainless Steel, Solid Version

Material: Wheel body: Cast stainless steel 1.4308.
Rim turned, matt blasted.
At version B: Handle Duroplast PF31, black, glossy finish. Spindle: Stainless steel 1.4305.

Version A: Without cylindrical handle.
Version B: With revolving cylindrical handle.

Easy to clean.

Keyway available at extra charge.

Ordering Details: e.g.: Product No. 670 995 10, Handwheel, Diameter 100 mm

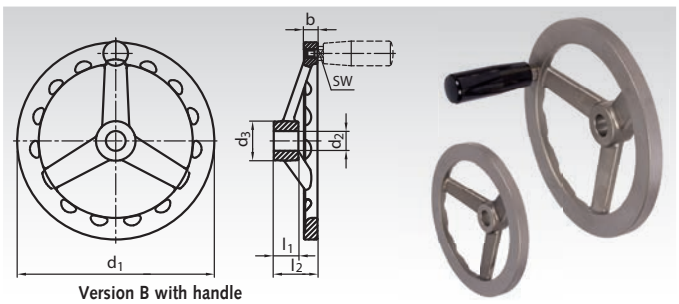

Version B with handle

Product No. Version A	Product No. Version B	d_1 mm	d_2^{H8} mm	b mm	d_3 mm	l_1 mm	l_2 mm	Cyl. Grip-Ø mm	Grip-length mm	No. of spokes pcs.	sw mm	Weight Vers. A g	Weight Vers. B g
670 995 10	**670 996 10**	100	10	7	20	15	27,5	18	45	3	9	222	255
670 995 12	**670 996 12**	125	12	9	24	16	28,5	21	55	3	9	425	460
670 995 14	**670 996 14**	140	14	10	28	18	30,5	23	71	3	11	640	800
670 995 16	**670 996 16**	160	16	11	31	20	35,5	23	71	3	11	805	900
670 995 20	**670 996 20**	200	18	14	36	23	39	23	71	3	11	1442	1524
670 995 22	**670 996 22**	200	20	14	36	23	39	23	71	3	11	1400	1482

Handwheels Stainless Steel, Solid Version, similar to DIN 950

Material: Wheel body: Cast stainless steel 1.4401.
Rim turned and polished.
At version B: Handle stainless steel 1.4404.

Version A: Without handle.
Version B: With fixed handle.

Acid-resistant A4-quality. Easy to clean.
Dimensions almost according to DIN 950.

Keyway available at extra charge.

Ordering Details: e.g.: Product No. 670 997 10, Handwheel DIN 950, stainless steel, Version A, 100 mm

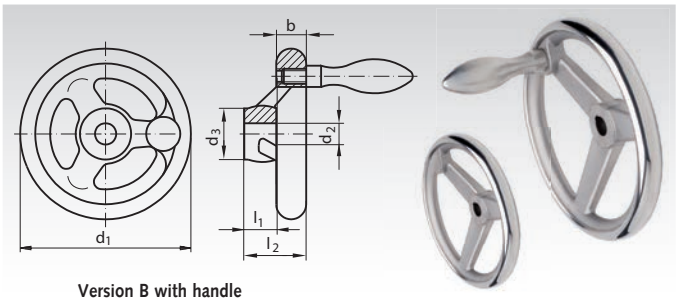

Version B with handle

Product No. Version A	Product No. Version B	d_1 mm	d_2^{H9} mm	b mm	d_3 mm	l_1 mm	l_2 mm	Cyl. Grip-Ø mm	Grip-length mm	No. of spokes pcs.	Weight Vers. A g	Weight Vers. B g
670 997 10	**670 998 10**	100	10	14,5	25,5	17	33	16	50	3	433	480
670 997 12	**670 998 12**	125	12	15,8	27	18	35,5	20	64	3	659	770
670 997 14	**670 998 14**	140	14	17	29	19	38,5	20	64	3	865	940
670 997 16	**670 998 16**	160	14	17,5	31	20	39,5	25	80	3	1156	1320
670 997 20	**670 998 20**	200	18	20	37	24	44,5	25	80	3	1938	2060

Handwheels 527.1 with Peripheral Grooves

Material: Plastic Thermoplast (PA) reinforced, black, gloss finish. Hub: Steel, burnished.

With steel hubs of large dimension. For applications requiring a large contact surface or a large diameter bore.

Temperature resitant up to +120°C.

Keyway available at extra charge.

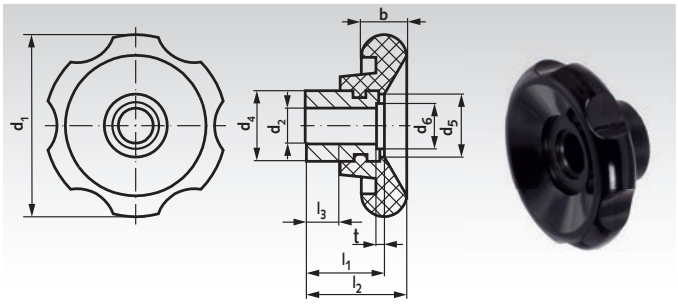

Ordering Details: e.g.: Product No. 675 052 01, Handwheel 527.1, 50mm

Product No.	d_1 mm	d_2^{H7} mm	d_4 mm	d_5 mm	d_6 mm	t mm	b mm	$l_1^{-0.5}$ mm	l_2 mm	l_3 mm	Weight g
675 052 01	50	10	20	18	-	-	13	21	29	10	60
675 062 01	60	12	25	24	-	-	16	23	30	11	110
675 070 01	70	14	30	29	21,4	1,5	18	25	33	12	160
675 083 01	80	16	35	34	21,4	1,5	19	30	40	15	255

Spoked Handwheels 522 Made from Plastic with Revolving Cylindrical Handle

Material: Plastic Thermoplast reinforced, impact-proof, black, matt finish. Hub bush: Steel burnished.
Brass threaded bush for screwing in the cylindrical grip.
Revolving cylindrical handle: Plastic, black.

Perfect and flawless surface and excellent concentricity.

Keyway available at extra charge.

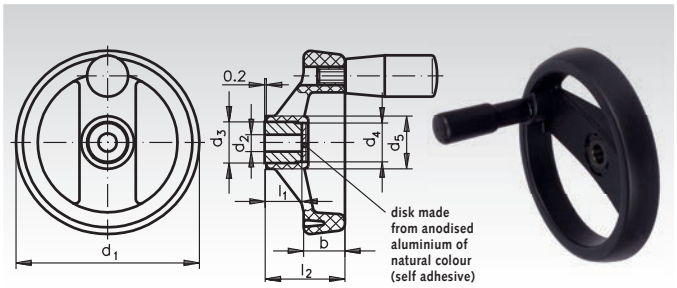

Ordering Details: e.g.: Product No. 675 708 00, Spoked Handwheel 522, 80 mm

Product No.	d_1 mm	d_2^{H7} mm	d_3 mm	d_4 mm	d_5 mm	b mm	l_1 mm	l_2 mm	Cyl. Grip Ø mm	Weight g
675 708 00	80	8	18	17	23	18	17	35	18	106
675 710 00	100	10	18	17	25	20	17	37	22	150
675 712 00	125	12	22	21	31	22	22	44	23	248
675 716 00	160	14	26	25	40	25	27	51	23	379
675 720 00	200	20	30	31	50	28	34	61	26	561
675 725 00	250	20	35	34	59	32	38	70	28	880

Retractable-Handle Handwheels 5223

Material: Thermoplast reinforced, impact-proof, black, matt finish.
Hub bush: Steel burnished.
Folding system: Steel burnished.
Retractable handle: Plastic black.

Use: When the handle must not stick out. The handle is firmly locked in a slim taper in the operating position. To retract the handle, it is pulled out of its taper seat and then tilted. A compression spring locks the handle in both end positions. When folding the handle away, it automatically locks in position.

Keyway available at extra charge.

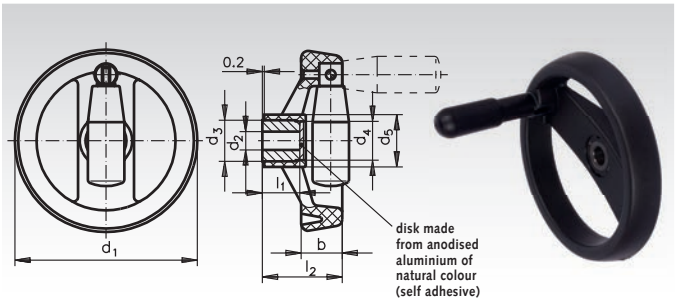

Ordering Details: e.g.: Product No. 675 508 00, Retractable-Handle Handwheel 5223, 80 mm

Product No.	d_1 mm	d_2^{H7} mm	d_3 mm	d_4 mm	d_5 mm	b mm	l_1 mm	l_2 mm	Retr. Handle Ø/mm	Weight g
675 508 00	80	10	18	17	23	18	17	35	21	70
675 510 00	100	12	18	17	25	20	17	37	22	165
675 512 00	125	12	22	21	31	22	22	44	23	240
675 516 00	160	14	26	25	40	25	27	51	23	400
675 520 00	200	20	30	31	50	28	34	61	26	585
675 525 00	250	20	35	34	59	32	38	70	28	950



Reworking within 24h-service possible. Custom made parts on request.

Spoked Handwheels DIN 950 with Smooth Rim and Slanted Spokes

Material: Grey cast iron.

Number of spokes:
3 spokes for sizes: up to Ø 200.
5 spokes for sizes: from Ø 225.
Version B/A = Rim turned and polished. Hub surfaces machined. Bores H7.
Version B/G = As vers. B/A, but with threaded lug for handle.

Keyway available at extra charge.

Ordering Details: e.g.: 672 408 00, Spoked Handwheel DIN 950, B/G, 80 mm
(Matching handle DIN 39, Product No. 662 116 00 or DIN 98, Product No. 663 116 00)

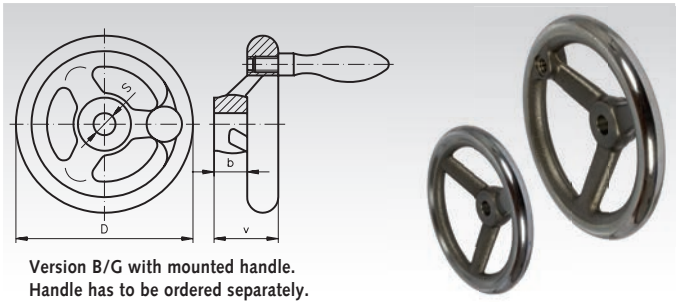

Version B/G with mounted handle.
Handle has to be ordered separately.

Product No. Vers. B/A	Product No. Vers. B/G	Rim Ø D mm	Bore S^{H7} mm	Hub-Ø mm	Hub-Length B mm	Overall Height V mm	Weight kg	Product No. Matching Handle Steel Fixed DIN 39	Revolving DIN 98
672 208 00	**672 408 00**	80	10	24	16	29	0,45	**662 116 00**	**663 116 00**
672 210 00	**672 410 00**	100	10	26	17	33	0,56	**662 116 00**	**663 116 00**
672 212 00	**672 412 00**	125	12	28	18	36	0,85	**662 120 00**	**663 120 00**
672 214 00	**672 414 00**	140	14	30	19	39	1,10	**662 120 00**	**663 120 00**
672 216 00	**672 416 00**	160	14	32	20	40	1,35	**662 125 00**	**663 125 00**
672 218 00	**672 418 00**	180	16	35	22	43	1,80	**662 125 00**	**663 125 00**
672 220 00	**672 420 00**	200	18	38	24	45	2,30	**662 125 00**	**663 125 00**
672 222 00	**672 422 00**	225	20	42	26	48	3,30	**662 125 00**	**663 125 00**
672 225 00	**672 425 00**	250	22	45	28	50	4,20	**662 132 00**	**663 132 00**
672 228 00	**672 428 00**	280	24	50	30	53	5,20	**662 132 00**	**663 132 00**
672 231 00	**672 431 00**	315	26	53	33	56	6,50	**662 132 00**	**663 132 00**
672 236 00	**672 436 00**	360	28	60	35	59	8,90	**662 136 00**	**663 136 00**
672 240 00	**672 440 00**	400	30	65	38	63	11,20	**662 136 00**	**663 136 00**

Handles page 548.

Spoked Handwheels DIN 950 with Smooth Rim and Slanted Spokes, with Square Hole

Material: Grey cast iron.

Number of spokes:
3 spokes for sizes: up to Ø 200.
5 spokes for sizes: from Ø 225.
Version V/A = Rim turned and polished. Hub surface machined, square hole reamed true to gauge
Version V/G = As version V/A, but with threaded lug for handle.

Ordering Details: e.g.: 673 408 00, Spoked Handwheel DIN 950, V/G, 80 mm
(Matching Handle DIN 39, Product No. 662 116 00 or DIN 98, Product No. 663 116 00)

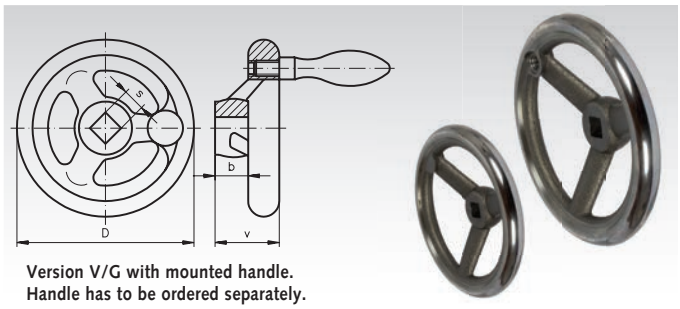

Version V/G with mounted handle.
Handle has to be ordered separately.

Product No. V/A	Product No. V/G	Rim-Ø D mm	Square Hole S^{H11} mm	Hub Ø mm	Hub length b mm	Overall Heigth v mm	Weight kg	Product No. Matching Handle Steel Fixed DIN 39	Revolving DIN 98
673 208 00	**673 408 00**	80	9	24	16	29	0,45	**662 116 00**	**663 116 00**
673 210 09	**673 410 09**	100	9	26	17	33	0,56	**662 116 00**	**663 116 00**
673 210 00	**673 410 00**	100	10	26	17	33	0,56	**662 116 00**	**663 116 00**
673 212 00	**673 412 00**	125	11	28	18	36	0,85	**662 120 00**	**663 120 00**
673 214 00	**673 414 00**	140	12	30	19	39	1,10	**662 120 00**	**663 120 00**
673 216 12	**673 416 12**	160	12	32	20	40	1,35	**662 125 00**	**663 125 00**
673 216 00	**673 416 00**	160	14	32	20	40	1,35	**662 125 00**	**663 125 00**
673 218 00	**673 418 00**	180	14	35	22	43	1,80	**662 125 00**	**663 125 00**
673 220 14	**673 420 14**	200	14	38	24	45	2,30	**662 125 00**	**663 125 00**
673 220 00	**673 420 00**	200	17	38	24	45	2,30	**662 125 00**	**663 125 00**
673 222 00	**673 422 00**	225	19	42	26	48	3,30	**662 125 00**	**663 125 00**
673 225 17	**673 425 17**	250	17	45	28	50	4,20	**662 132 00**	**663 132 00**
673 225 00	**673 425 00**	250	22	45	28	50	4,20	**662 132 00**	**663 132 00**
673 231 19	**673 431 19**	315	19	53	33	56	6,50	**662 132 00**	**663 132 00**
673 231 00	**673 431 00**	315	27	53	33	56	6,50	**662 132 00**	**663 132 00**
673 240 24	**673 440 24**	400	24	65	38	63	11,20	**662 136 00**	**663 136 00**
673 240 00	**673 440 00**	400	32	65	38	63	11,20	**662 136 00**	**663 136 00**

Handles page 548.

Spoked Handwheels DIN 950 AL with Smooth Rim and Slanted Spokes

Material: Aluminium.

Number of spokes:
3 spokes for sizes up to Ø 200 mm.
5 spokes for sizes from Ø 225 mm.

Version C = wheel rim ground and high-gloss finish.
Version CA = as Version C, but with threaded lug for handle.

Keyway available at extra charge.

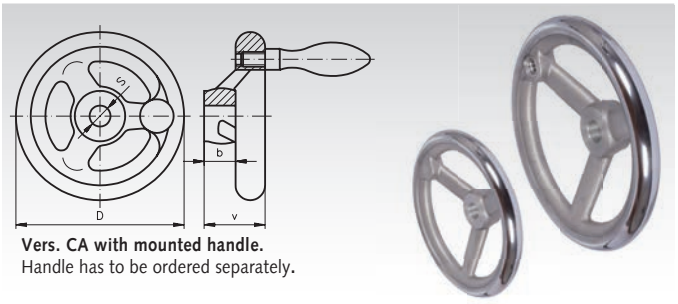

Vers. CA with mounted handle.
Handle has to be ordered separately.

Ordering Details: e.g.: Product No. 670 008 00, Spoked Handwheel DIN 950 Al, Vers. C, 80 mm

Product No. Vers. C	Product No. Vers. CA	D mm	S^{H7} mm	Hub-Ø mm	b mm	v mm	Weight kg	Matching Handle AL Fixed DIN 39	Matching Handle AL Revolving DIN 98
670 008 00	**670 108 00**	80	10	26	16	29	0,15	**662 316 00**	**663 316 00**
670 010 00	**670 110 00**	100	12	28	17	33	0,19	**662 316 00**	**663 316 00**
670 012 00	**670 112 00**	125	13	30	18	36	0,29	**662 320 00**	**663 320 00**
670 014 00	**670 114 00**	140	14	32	19	39	0,36	**662 320 00**	**663 320 00**
670 016 00	**670 116 00**	160	15	34	20	40	0,52	**662 325 00**	**663 325 00**
670 018 00	**670 118 00**	180	16	37	22	43	0,70	**662 325 00**	**663 325 00**
670 020 00	**670 120 00**	200	18	40	24	45	0,89	**662 325 00**	**663 325 00**
670 022 00	**670 122 00**	225	20	46	26	48	1,20	**662 325 00**	**663 325 00**
670 025 00	**670 125 00**	250	22	48	28	50	1,60	**662 332 00**	**663 332 00**
670 028 00	**670 128 00**	280	24	56	30	53	2,00	**662 332 00**	**663 332 00**
670 032 00	**670 132 00**	315	26	56	33	56	2,46	**662 332 00**	**663 332 00**

Handles page 548.

Solid-Disk Handwheels, Similar DIN 950 AL

Material: Aluminium.

Version C = rim of wheel ground and with high-gloss finish.

Keyway available at extra charge.

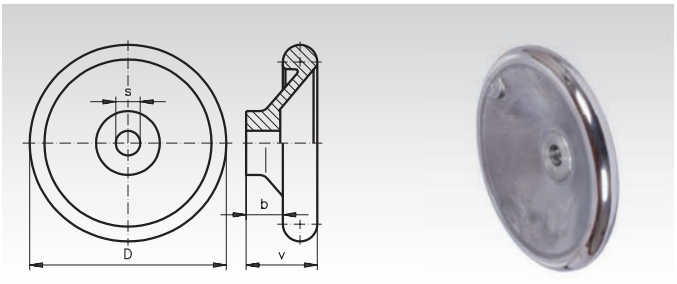

Ordering Details: e.g.: Product No. 670 308 00, Solid-Disk Handwheel DIN 950 Al, Version C, 80 mm

Product No. Vers. C	D mm	S^{H7} mm	Hub-Ø mm	b mm	v mm	Weight kg
670 308 00	80	10	26	16	29	0,15
670 310 00	100	12	27	17	33	0,26
670 312 00	125	13	28	18	36	0,35
670 314 00	140	14	30	19	39	0,46
670 316 00	160	15	37	20	40	0,72
670 318 00	180	16	36	22	43	0,95
670 320 00	200	18	40	24	45	1,20
670 322 00	225	20	42	26	48	1,60
670 325 00	250	22	51	28	50	2,00
670 328 00	280	24	52	30	53	2,40
670 332 00	315	26	55	33	56	3,50



Reworking within 24h-service possible. Custom made parts on request.

Solid-Disk Handwheels DIN 3670 with Recessed Grips

Material: Aluminium, hub machined, rim turned and polished.
Without Handle.

Keyway available at extra charge.

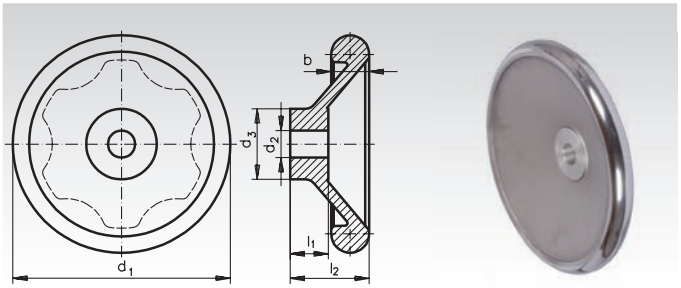

Ordering Details: e.g.: Product No. 670 412 00, Solid-Disk Handwheel DIN 3670, 125 mm

Product No.	d_1 mm	d_2^{H7} mm	d_3 mm	b mm	l_1 mm	l_2 mm	Weight g
670 412 00	125	12	31	16	18	36	306
670 416 00	160	14	36	18	20	40	514
670 420 00	200	18	42	22	24	45	943
670 425 00	250	22	48	26	28	50	1608

Solid-Disk Handwheels 323

Material: Aluminium gravity die-cast, plastic coated, black, textured finish.

Hub machined. Rim turned on all sides. The rim is machined before coating, thus it is perfectly concentric.

Version A: Without cylindrical handle.
Version B: With revolving cylindrical handle.

Keyway available at extra charge.

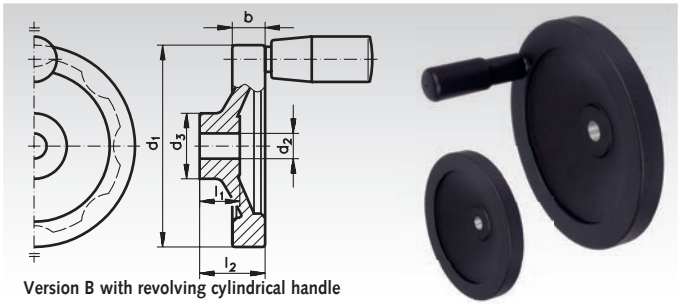

Version B with revolving cylindrical handle

Ordering Details: e.g.: Product No. 670 901 00, Solid-Disk Handwheel 323, 80 mm

Product No. Vers. A	Product No. Vers. B	d_1 mm	d_2^{H7} mm	d_3 mm	b mm	l_1 mm	l_2 mm	Cylindrical Handle Ø mm	Weight Vers. A g	Weight Vers. B g
670 901 00	**670 911 00**	80	10	26	13	16	26	18	140	160
670 902 00	**670 912 00**	100	10	28	14	17	30	21	210	250
670 903 00	**670 913 00**	125	12	31	15	18	33	23	320	400
670 904 00	**670 914 00**	140	14	36	16,5	19	36	23	440	510
670 905 00	**670 915 00**	160	14	36	18	20	39	26	570	670
670 906 00	**670 916 00**	200	18	42	20,5	24	45	26	930	1030
670 907 00	**670 917 00**	250	22	48	23	28	51	28	1550	1670

Handwheels with Retractable Handle 3223

Material: Aluminium gravity die-cast, hub machined, rim turned and polished. Parts of the folding mechanism: Steel hardened and burnished.

These handwheels are used in applications where the handle must not stick out. Handle and folding mechanism are fully encased in the rim. The handle is locked in the operating position. To retract it, the handle it is pulled out of its taper seat and then tilted. A compression spring locks the handle in both end positions.

Keyway available at extra charge.

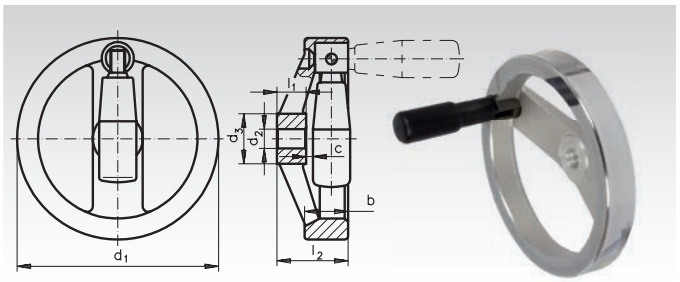

Ordering Details: e.g.: Product No. 670 516 00, Handwheel with Retractable Handle 3223, 160 mm

Product No.	d_1 mm	d_2^{H7} mm	d_3 mm	b mm	c min. mm	l_1 mm	l_2 mm	Handle Ø mm	Weight g
670 512 00	125	12	31	24,5	4,5	18	44	23	469
670 516 00	160	14	36	25	4	20	47	26	697
670 520 00	200	18	42	25	5,5	24	52,5	26	978



Reworking within 24h-service possible. Custom made parts on request.

Spoked Handwheels 320 and Solid-Disk Handwheels 326

Material: Aluminium, gravity die-cast. Revolving cylindrical handle made from plastic with threaded steel stud and Allen screw. Hub machined, rim of wheel turned and polished all over.

Hub length and bore diameter according to DIN 950.

Keyway available at extra charge.

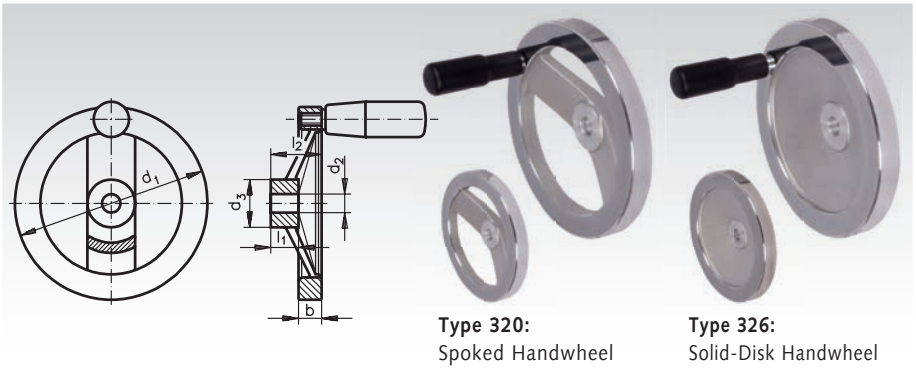

Type 320:
Spoked Handwheel

Type 326:
Solid-Disk Handwheel

Ordering Details: e.g.: Product No. 670 712 00, Spoked Handwheel 320 with Handle, 125 mm

Product No. 320 with Handle	Product No. 320 without Handle	Product No. 326 with Handle	Product No. 326 without Handle	d_1 mm	d_2 H7 mm	d_3 mm	b mm	l_1 mm	l_2 mm	Cylindrical Handle Ø mm	Weight g 320 with H.	320 without H.	326 with H.	326 without H.
-	-	-	**670 801 00**	80	10	26	13	16	26	18	-	-	161	134
-	-	**670 810 00**	**670 802 00**	100	10	31	14	17	30	21	-	-	255	215
670 712 00	**670 703 00**	**670 812 00**	**670 803 00**	125	12	31	15	18	33	23	383	311	394	318
670 714 00	**670 704 00**	**670 814 00**	**670 804 00**	140	14	34	16,5	19	36	23	486	411	507	431
670 716 00	**670 705 00**	**670 816 00**	**670 805 00**	160	14	36	18	20	39	26	643	539	675	570
670 720 00	**670 706 00**	**670 820 00**	**670 806 00**	200	18	42	20,5	24	45	26	996	892	990	885
670 725 00	**670 707 00**	**670 825 00**	**670 807 00**	250	22	48	23	28	51	28	1598	1478	1626	1552

Safety Handwheels SHR

Material: Aluminium, polished.
Coupling attachment assembled.
Can only be supplied with revolving, cylindrical handle made from plastic with threaded steel bolt and with hub keyway.

According to safety regulations, handwheels must be mounted on the shaft in such a way that they do not rotate along with the machine drive. Safety handwheels comply with this regulation.

Procedure: Wheel disengaged if not used. By axial displacement of the wheel (pulling) the two serrated wheel rims are engaged. The wheel is now positively keyed to the shaft. When the wheel is released, it automatically disengages. The coupling elements are assembled together in an enclosed unit. Coupling attachment made from steel, nitrided, bearing surface ground and PTFE coated, for minimal friction between bearing surfaces and high wear resistance. An oil hole is provided, which serves to connected to a pressure oiler in the wheel hub. Frequent lubrication is an important precondition in guaranteeing the correct functioning of the plain-bearing coupling attachment. The range of application of these handwheels is limited to low shaft speeds, or to higher speeds of only short duration (e.g. feed screws for milling machine table with rapid feed).
The coupling attachments can also be supplied separately, to be mounted with existing handwheels. Prices on request.
We assume no liability for any consequential damage.

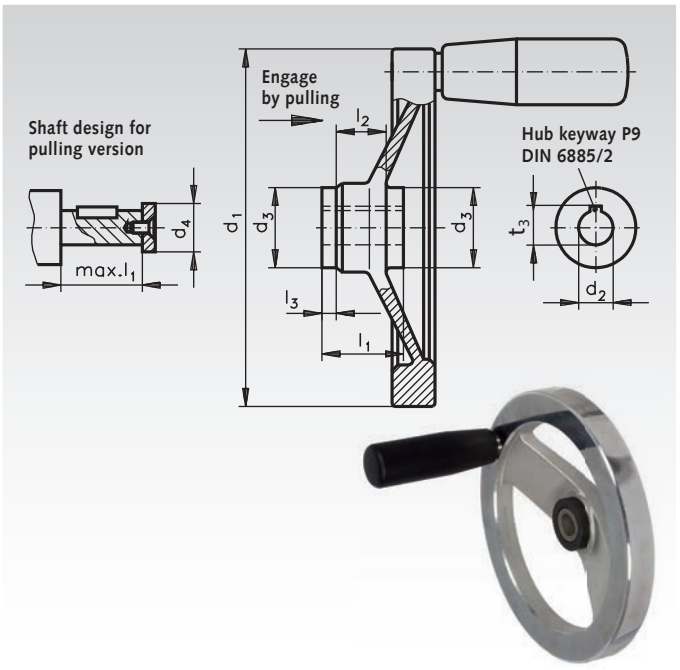

Ordering Details: e.g.: Product No. 670 612 00, Safety Handwheel SHR, 125 mm

Product No.	d_1 mm	d_2 H7 mm	d_3 mm	d_4 max. mm	l_1 mm	l_2 mm	l_3 mm	Weight g
670 612 00	125	12	28	17	28,5	18	5	552
670 614 00	140	12	28	17	28,5	18	5	660
670 616 00	160	14	32	21	32,5	20	6	907
670 620 00	200	18	38	26	36,5	24	6	1324
670 625 00	250	22	45	30	47,5	28	12	2122



Reworking within 24h-service possible. Custom made parts on request.

Lifting Pins, Self Locking

Material: Steel, manganese-phosphate treated. Press bolt made from AL.

Press = release.
Loosen = lock.

Fast and easy-to-use, robust lifting element with moveable shackle. Special lifting devices, i.e., threads are no longer required on the workpiece. Simple H11 bores are sufficient.

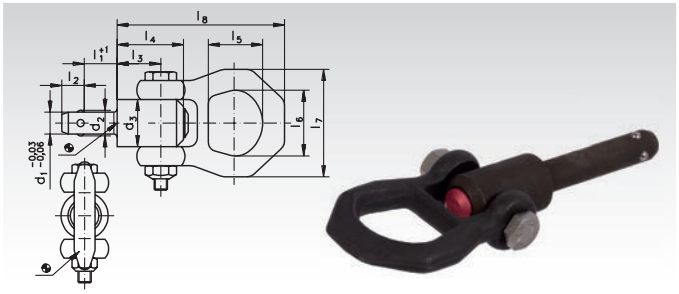

Ordering Details: e.g.: Product No. 666 910 15, Lifting Pin, Self Locking, 10 x 15

Product No.	d_1	l_1	d_2	d_3	d_4 min.	l_2	l_3	l_4	l_5	l_6	l_7	l_8	x min.	x max.	Location Hole^{H11}	F1*	F2*	F3*	Weight
	mm	mm	mm	mm	mm	mm	mm	mm	mm	mm	mm	mm	mm	mm	mm	kN	kN	kN	g
666 910 15	10	15	11,7	21,5	12,2	10,2	25,7	36,0	27	30	49	87,5	1,5	10	10	2,7	2,4	2,1	139
666 910 25	10	25	11,7	21,5	12,2	10,2	25,7	36,0	27	30	49	87,5	1,5	15	10	2,7	2,4	2,1	145
666 910 35	10	35	11,7	21,5	12,2	10,2	25,7	36,0	27	30	49	87,5	1,5	25	10	2,7	2,4	2,1	152
666 910 50	10	50	11,7	21,5	12,2	10,2	25,7	36,0	27	30	49	87,5	1,5	35	10	2,7	2,4	2,1	161
666 912 15	12	15	14,2	21,5	14,7	11,0	25,7	36,0	27	30	49	87,5	1,5	10	12	3,5	3,2	2,8	147
666 912 25	12	25	14,2	21,5	14,7	11,0	25,7	36,0	27	30	49	87,5	1,5	20	12	3,5	3,2	2,8	156
666 912 35	12	35	14,2	21,5	14,7	11,0	25,7	36,0	27	30	49	87,5	1,5	25	12	3,5	3,2	2,8	162
666 912 50	12	50	14,2	21,5	14,7	11,0	25,7	36,0	27	30	49	87,5	1,5	45	12	3,5	3,2	2,8	278
666 916 25	16	25	18,6	26,0	19,2	15,1	31,0	44,5	27	30	49	92,8	1,5	20	16	4,8	4,5	4,1	272
666 916 50	16	50	18,6	26,0	19,2	15,1	31,0	44,5	27	30	49	92,8	1,5	40	16	4,8	4,5	4,1	311
666 916 75	16	75	18,6	26,0	19,2	15,1	31,0	44,5	27	30	49	92,8	1,5	55	16	4,8	4,5	4,1	351

* For a 5-fold safety.

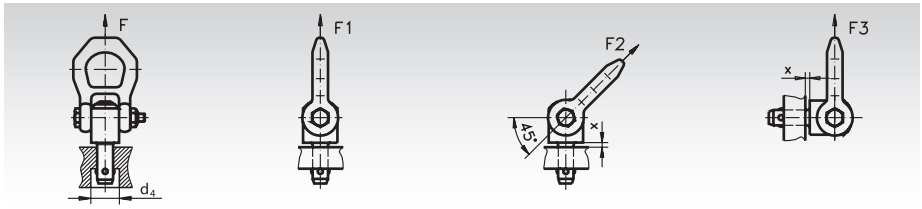

Socket Pins with Spring-Loaded Balls, Self Locking (Ball Lock PINS)

Material: Pin part: stainless steel 1.4542 hardened.
Handle: Plastic (PA6).
Spring: stainless steel.

STAINLESS

Press = release.
Loosen = lock.

For quick fastening and securing of parts and workpieces. Fast and easily released for frequently repeated actions, e.g., replaceable bearing pins.
Temperature range: -30° / +80° C.

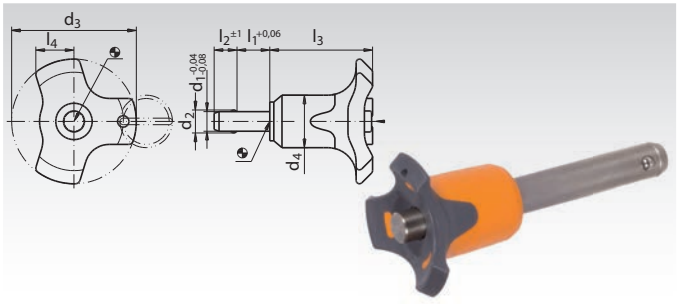

Product No.	d_1	l_1	d_2	d_3	d_4	l_2	l_3	l_4	Location Hole H11	Shearing Resistance*	Weight
	mm	mm	mm	mm	mm	mm	mm	mm		kN	g
666 806 10	6	10	7,0	33,2	14,5	7,0	26,7	10,8	6	35	16
666 806 20	6	20	7,0	33,2	14,5	7,0	26,7	10,8	6	35	18
666 806 30	6	30	7,0	33,2	14,5	7,0	26,7	10,8	6	35	20
666 806 40	6	40	7,0	33,2	14,5	7,0	26,7	10,8	6	35	22
666 806 50	6	50	7,0	33,2	14,5	7,0	26,7	10,8	6	35	24
666 808 20	8	20	9,6	39,2	19,3	8,2	33,3	13,4	8	63	40
666 808 30	8	30	9,6	39,2	19,3	8,2	33,3	13,4	8	63	44
666 808 40	8	40	9,6	39,2	19,3	8,2	33,3	13,4	8	63	47
666 808 50	8	50	9,6	39,2	19,3	8,2	33,3	13,4	8	63	51
666 810 20	10	20	12,0	39,2	19,3	9,6	33,3	13,4	10	100	47
666 810 30	10	30	12,0	39,2	19,3	9,6	33,3	13,4	10	100	53
666 810 40	10	40	12,0	39,2	19,3	9,6	33,3	13,4	10	100	58
666 810 50	10	50	12,0	39,2	19,3	9,6	33,3	13,4	10	100	64
666 810 60	10	60	12,0	39,2	19,3	9,6	33,3	13,4	10	100	70
666 812 30	12	30	14,5	47,6	26,3	10,6	39,7	16,7	12	144	100
666 812 40	12	40	14,5	47,6	26,3	10,6	39,7	16,7	12	144	109
666 812 50	12	50	14,5	47,6	26,3	10,6	39,7	16,7	12	144	117
666 812 70	12	70	14,5	47,6	26,3	10,6	39,7	16,7	12	144	134
666 812 80	12	80	14,5	47,6	26,3	10,6	39,7	16,7	12	144	143
666 816 50	16	50	19,0	47,6	26,3	14,0	39,7	16,7	16	257	168
666 816 80	16	80	19,0	47,6	26,3	14,0	39,7	16,7	16	257	208

* Rupture limit.

Latch Clamps

Material: Sheet-metal parts: Case-hardened steel C10, zinc-plated, blue passivated.
Pulling latch: Steel St37, zinc-plated, blue passivated.
Handle with plastic sleeve, red, oil resistant.

Latch clamps allow a fast and secure locking of lids and covers.
The stroke of the pulling ledge can be adjusted within its range.
In the clamped position the pulling ledge with its clamping arm is parallel to the plane of the operating handle.
Latch bracket included in the delivery.

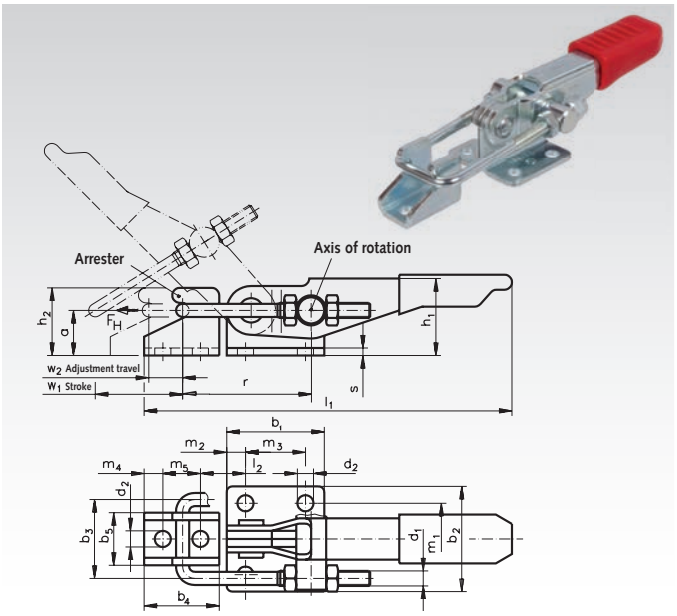

Ordering Details: e.g.: Product No. 676 204 00, Latch Clamp, Size 160

Product No.	Size	Holding Force F_H N	approx. Dimensions a mm	b_1 mm	b_2 mm	b_3 mm	b_4 mm	b_5 mm	d_1 mm	d_2 mm	h_1 mm	h_2 mm	l_1 mm	l_2 mm	m_1 mm	m_2 mm	m_3 mm	m_4 mm	m_5 mm	r mm	s mm	w_1 mm	w_2 mm	Weight g
676 204 00	160	1600	12	26	28	21	20	14	M4	4,3	22	18	98	11	19	5,0	16,0	5,0	10	34	2,0	25	11	85
676 206 00	320	3200	16	40	44	32	28	22	M6	6,5	30	25	152	19	32	10,5	19,0	7,0	14	57	3,0	48	13	250
676 208 00	700	7000	24	60	54	39	38	26	M8	8,5	42	36	220	23	38	9,5	41,5	9,5	19	74	3,5	58	26	60

Latch Clamps, Stainless Steel

Material: Sheet-metal parts: 1.4301.
Pulling latch: 1.4305.
Handle: Plastic sleeve, red, oil resistant.

Latch clamps allow a fast and secure locking of lids and covers.
The stroke of the pulling ledge can be adjusted within its range.
In the clamped position the pulling ledge with its clamping arm is parallel to the plane of the operating handle.
Latch bracket included in the delivery.

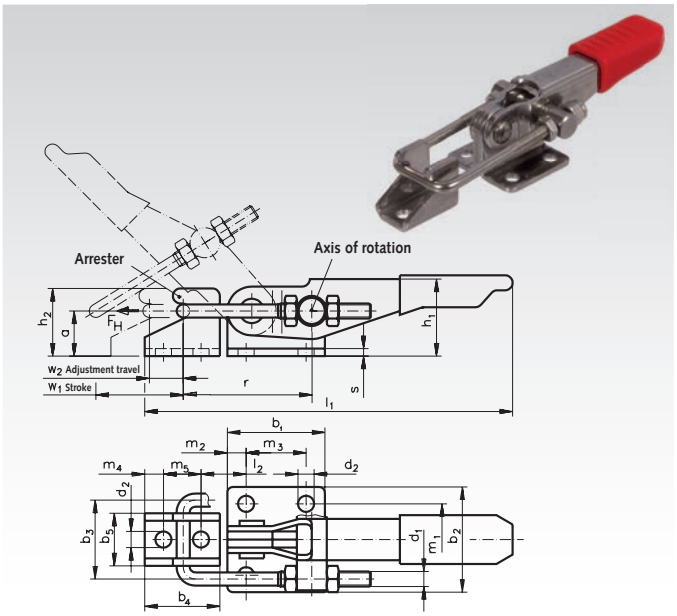

Ordering Details: e.g.: Product No. 676 992 04, Latch Clamp, Stainless Steel, Size 160

Product No.	Size	Holding Force F_H N	approx. Dimensions a mm	b_1 mm	b_2 mm	b_3 mm	b_4 mm	b_5 mm	d_1 mm	d_2 mm	h_1 mm	h_2 mm	l_1 mm	l_2 mm	m_1 mm	m_2 mm	m_3 mm	m_4 mm	m_5 mm	r mm	s mm	w_1 mm	w_2 mm	Weight g
676 992 04	160	1600	12	26	28	21	20	14	M4	4,3	22	18	98	11	19	5,0	16	5	10	37	2	25	11	85
676 992 06	320	3200	16	40	44	32	28	22	M6	6,5	30	25	152	19	32	10,5	19	7	14	57	3	48	13	250

Quick Clamps (Vertical Clamp with Horizontal Base, without Clamping Bolts)

Material: Steel-sheet parts: Case-hardened steel C10, zinc-plated. Bearing pins: Hardened, from size 200 case hardened.

All moving parts lubricated with special grease.
Handle with plastic sleeve, red, oil resistant.

Operating handle and clamping lever move in the same direction. In the clamping position the operating handle is vertical. Vertical clamps are available for holding forces F_H from 90 daN up to 460 daN.

Note: Worth pointing out is the clamping arm on all vertical clamps: It is blanked out from full and reinforced on the points of highest load. During the closing movement it is guided on both sides to prevent being affected by possible side thrusts.

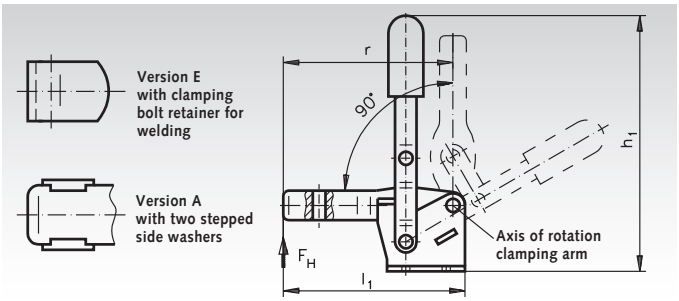

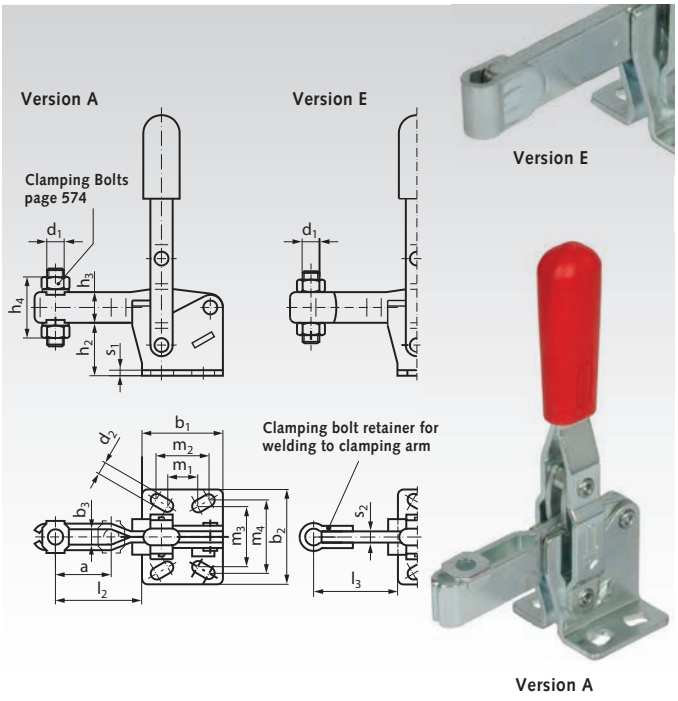

Version A: forked clamping arm.
Version E: solid clamping arm.

Product No. Version A	Product No. Version E	Size	F_H N	a≈ mm	b_1 mm	b_2 mm	b_3 mm	d_1* mm	d_2≈ mm	h_1≈ mm	h_2 mm	h_3 mm	h_4 mm	$l_{1\,max}$ mm	l_2≈ mm	$l_{3\,max}$ mm	m_1 mm	m_2 mm	m_3 mm	m_4 mm	r mm	s_1 mm	s_2 mm	Weight g
676 003 00	**676 043 00**	70	900	20	29	34	5,2	M5	4,5	98	20	11	21	67	32	41	15	16	24	24	63	2	4	95
676 006 00	**676 046 00**	130	1600	28	35	42	6,2	M6	5,5	142	28	16	27	86	42	54	12,5	19	27	29	80	2,5	5	210
676 010 00	**676 050 00**	230	2200	40	43	45	8,5	M8	6,5	168	33	18	31	112	58	73	19	20	32	32	104	3	6	350
676 015 00	**676 055 00**	330	2700	43	50	65	10,5	M10	8,5	195	43	22	38	131	66	86	29	32	46	45	122	3,5	7	550
676 020 00	**676 060 00**	430	3000	64	58	65	12,5	M12	8,5	247	55	26	45	166	88	114	32	32	54	45	156	4	10	1000
676 025 00	**676 065 00**	530	4600	90	80	95	12,5	M12	12,5	303	84	32	51	225	125	152	50	51	70	70	212	7	10	1960

* Clamping bolt page 574 has to be ordered separately.

Operating Principle

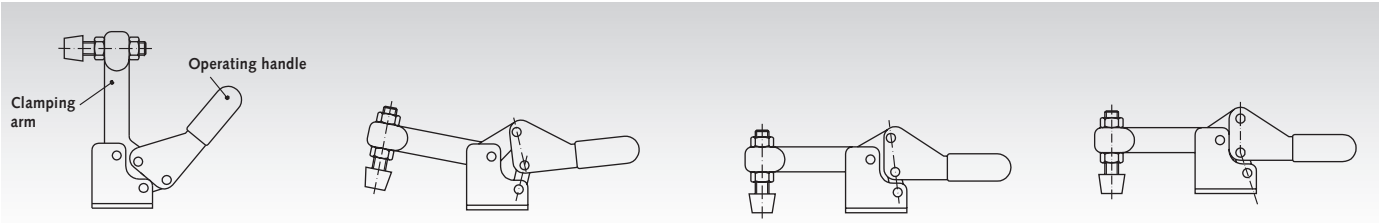

Position 1: By using the toggle link principle, these quick clamps offer essential advantages:
The clamping arm retracts to such an extent, that the workpiece can be inserted and removed completely unobstructed.
Position 2: Even the slightest forward movement of the operating handle moves the clamping arm with the contact pad over the workpiece.
As can be seen from the sketch, the position of the toggle links leads to a multiple of the input force at the operating handle being applied to the clamping arm.
In this position the quick clamp is not yet fully locked, i.e., any counter force applied to the operating handle will open the clamp.
Position 3: In this position all three pivots are perfectly aligned yielding the maximum clamping force (dead centre point).The clamping force applied to the workpiece is mainly dependent on:
• the input force applied to the operating handle,
• the position of the clamping bolt on the clamping lever.
The clamping force can be altered by readjusting the position of the clamping bolt: It increases if the entire contact area of the bolt touches the workpiece before the dead centre point is reached. This effect is clearly illustrated when using an elastic clamping pad.
Position 4: In this position the toggle link has arrived in the over-centre lock position, and the operating lever has reached a firm stop. This leads to a secure locking(self-blocking) of the quick clamp, preventing it from opening until it is released by the operator. The force which the clamping element is capable of withstanding in this over-centre lock position without suffering permanent deformation is known as holding force F_H. The holding force F_H is a characteristic value (co-efficient) for toggle clamps, and this value is mainly dependent on:
• the size (dimensions, geometry) of the quick clamp,
• the position of the clamping bolt on the clamping arm.
In the tables, the maximum holding force F_H is stated in relation to a particular position of the clamping arm.

Quick Clamps (Horizontal Clamp with Horizontal Base, without Clamping Bolts)

Material: Steel-sheet parts: Case-hardened steel C10, zinc-plated. Bearing pins: hardened, from size 350 case hardened.

All moving parts lubricated with special grease.
Handle with plastic sleeve, red, oil resistant.

Low profile in the clamping position, designed to avoid the operator's fingers being caught between the retracting clamping arm and the operating handle (safety distance). During the closing movement it is guided on both sides to prevent it from being affected by possible side thrusts

Operating principle page 573.

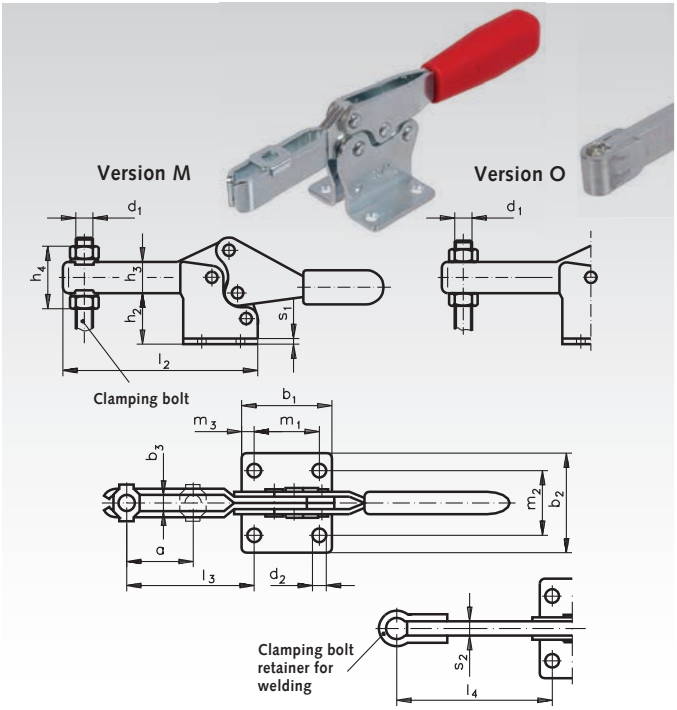

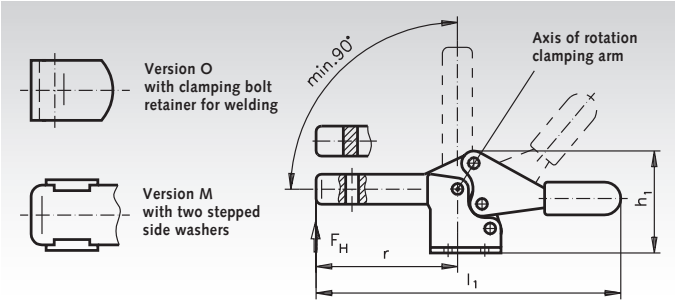

Version M: forked clamping arm.
Version O: solid clamping arm.

Ordering Details: e.g.: Product No. 676 102 00, Horizontal Clamp, Version M, Size 25

Product No. Version M	Product No. Version O	Size	Holding Force F_H N	a² mm	b_1 mm	b_2 mm	b_3 mm	d_1** mm	d_2 mm	h_1 mm	h_2 mm	h_3 mm	h_4 mm	l_1 mm	l_2 mm	l_3 mm	l_4 mm	m_1 mm	m_2 mm	m_3 mm	r mm	s_1 mm	s_2 mm	Weight g
676 102 00	-	25*	400	10	24	24,5	4,3	M4	4,3	23	12	7	15	68	43	20	-	15	16	4,5	24,5	1,2	-	25
676 103 00	**676 143 00**	75	900	20	28	26	5,5	M5	4,5	38	20	11	22,5	118	67	40	49,5	13,5	17	7,2	43	2	4	80
676 105 00	**676 145 00**	130	1000	32	36	40	6,5	M6	5,5	51	29	14	27	168	92	53	64	26	26	5	62	2,5	5	180
676 111 00	**676 151 00**	230	1700	37	44	42	8,5	M8	6,5	61,5	37	18	35	196	110	63,5	78	26	28,5	9	72	3	6	300
676 117 00	**676 157 00**	355	3200	58	60	56	10,4	M10	8,5	83	50	22	43	270	161	96	115	41	41	9,5	108,5	3,5	7	600
676 122 00	**676 162 00**	455	6200	65	70	65	12,4	M12	8,5	99	60	26	53	309	186	116	135	41,5	41,5	14,2	126	4	10	1400

* Size 25 only available in version M.
** Clamping bolts have to be ordered separately.

Clamping Bolts and Protective Caps for Quick Clamps

Material:
Hexagon Bolt: DIN 933, steel, strength class 8, zinc-plated.
Hexagon nuts: DIN 934/DIN 936, steel, zinc-plated.
Protective cap: Neoprene 85° Shore hardness, black.

Note: Protective cap has to be ordered separately.
The elastic protective cap can be easily slipped over the bolt head.

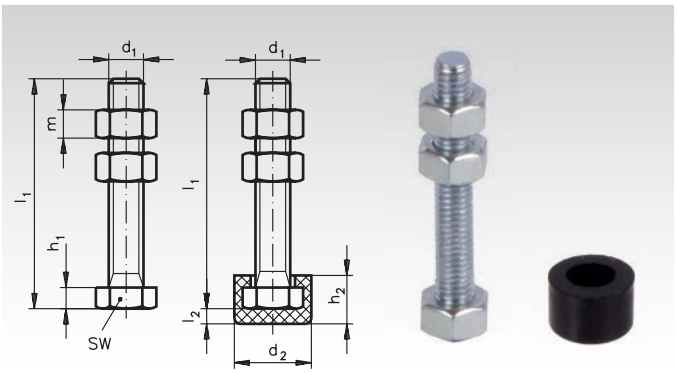

Ordering Details: e.g.: Product No. 676 000 04, Clamping Bolt M4

Product No. Screw	Product No. Protect. Cap	d_1 mm	Length l_1 mm	d_2 mm	h_1 mm	h_2 mm	l_2 mm	m mm	sw mm	Weight Screw g	Weight Cap g
676 000 04	**676 000 44**	M4	23	11	3	6,7	2,7	3,2	7	5	1
676 000 05	**676 000 45**	M5	38	12,6	3,5	8,2	2,7	4,7	8	9	1
676 000 06	**676 000 46**	M6	49	15	4	10,2	4,2	5,2	10	11	2
676 000 08	**676 000 48**	M8	56	19	5,5	13,3	5,8	6,8	13	24	4
676 000 10	**676 000 50**	M10	77	24,4	6,5	16,3	7,2	8,4	16	47	7
676 000 12	**676 000 52**	M12	88	26	7,5	19,4	8,7	10,8	18	75	10

KL Retainers, Steel zinc plated

Material: Spring steel, zinc plated.

KL retainers are used to fix parts on shafts or bolts in axial direction. They can get mounted and dismounted very easily. They are intended for connections which must be disassembled more often. It is necessary to ensure that there is no unwanted strong contact to the retainer, because it is easily to remove.

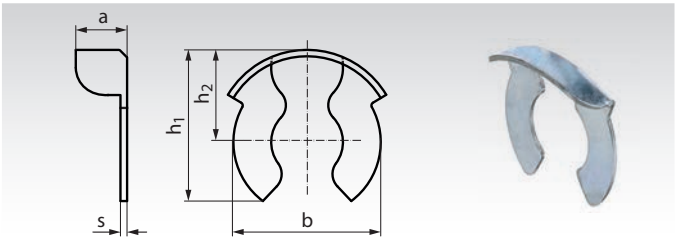

Ordering Details: e.g.: Product No. 637 800 01, KL Retainer Nominal Size 3mm

Product No.	Nominal Size	b mm	h_1 mm	h_2 mm	a mm	s mm	F_{ax}* kN	Weight g/100	Dimensions for bolts or shafts d_1^{h11} mm	d_2^{h11} mm	$m^{+0,1}$ mm	n mm	z mm
637 800 01	3	4,3	5,0	3,0	2,0	0,4	1,1	4,9	3	2,3	0,64	1,5	0,5
637 801 01	4	6,5	7,0	4,3	2,7	0,4	1,5	10,9	4	3,2	0,64	2,0	0,5
637 803 01	5	7,5	8,7	5,2	2,8	0,5	3,0	19,5	5	4,0	0,74	2,5	0,5
637 805 01	6	10,4	11,5	6,8	3,5	0,5	4,9	33	6	5,0	0,74	3,0	0,75
637 807 01	8	11,5	12,1	7,2	4,1	0,5	5,5	41	8	6,0	0,94	3,5	1,0
637 809 01	10	15,6	16,3	9,5	5,9	0,6	9,5	90	10	8,0	1,05	4,5	1,0
637 811 01	12	16,7	18,0	10,5	6,1	0,6	10,7	110	12	9,0	1,15	5,0	1,25
637 813 01	14	19,0	20,0	11,5	6,5	0,7	12,7	158	14	10,0	1,25	5,5	1,5
637 815 01	16	22,7	23,5	13,8	7,8	0,8	14,0	228	16	12,0	1,35	6,0	1,5
637 817 01	24	34,5	24,0	20,0	9,0	1,0	**	617	20 - 25	16 - 18	1,80	8,0	1,5

* Max. transmittable force, static, on shafts with min. strength 500 N/mm².
** Depending on the shaft diamater.

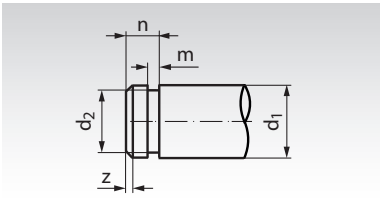

SL Retainers, Steel zinc plated

Material: Spring steel, zinc plated.

SL retainers are used to fix parts on shafts or bolts in axial direction. The large curvature results to a strong preload and eleminates tolerances for a snug fit. They are not so easy and quick to mount and to dismount like KL retainers, but the connection is much better secured against unwanted loosening.

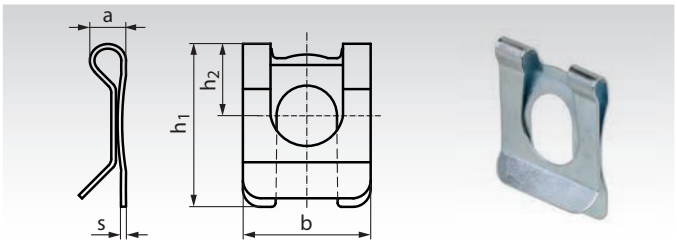

Ordering Details: e.g.: Product No. 637 901 01, SL Retainer Nominal Size 4mm

Product No.	Nominal Size	b mm	h_1 mm	h_2 mm	a mm	s mm	F_{ax}* kN	Weight g/100	Dimensions for bolts or shafts d_1^{h11} mm	d_2^{h11} mm	$m^{+0,1}$ mm	n mm	z mm
637 901 01	4	7	8,5	4,0	2,3	0,3	1,0	19	4	3,2	0,64	2,0	0,5
637 903 01	5	9	10,7	5,0	3,3	0,4	1,3	34	5	4	0,74	2,5	0,5
637 905 01	6	11	14,1	6,0	3,8	0,4	1,5	63	6	5	0,74	3,0	0,75
637 907 01	8	14	17,5	8,0	4,0	0,5	3,6	109	8	6	0,94	3,5	1,0
637 909 01	10	18	22,1	10,0	5,0	0,5	6,4	211	10	8	1,05	4,5	1,0
637 911 01	12	22	26,0	12,0	5,0	0,5	9,6	280	12	9	1,15	5,0	1,25
637 913 01	14	25	30,0	13,5	6,0	0,6	11,3	474	14	10	1,25	5,5	1,5
637 915 01	16	28	34,0	16,0	6,0	0,6	13,5	563	16	12	1,35	6,0	1,5

* Max. transmittable force, static, on shafts with min. strength 500 N/mm².

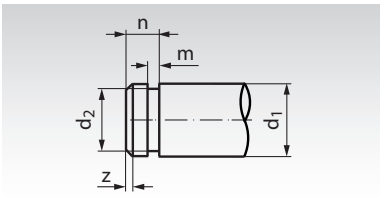

Assortment Box Retainers for shafts, type KL

Material: Steel, zinc-plated.

The assortment box is made from impact-resitant plastic of premium quality and is filled with KL-retainers for bolts with groove / clevises / clevis joints.
Contains 880 pieces.
Box size 240 x 193 x 56 mm. Weight 1.8 kg.

Size	Amount
3	100
4	100
5	100
6	100
8	100
10	80
12	100
14	80
16	100
24	20

Product No. 618 000 01

Product No. 618 000 01



Assortment Box SL-Retainers Retainers for shafts, type SL

Material: Steel, zinc-plated.

The assortment box is made from impact-resitant plastic of premium quality and is filled with SL-retainers for bolts with groove / clevises / clevis joints.
Contains 560 pieces.
Box size 240 x 193 x 56 mm. Weight 1.23 kg.

Size	Amount
4	100
5	100
6	100
8	100
10	40
12	40
14	40
16	40

Product No. 618 000 02

Product No. 618 000 02



Assortment Box Washers and Pins

Material: Steel, zinc-plated.

The assortment box is made from impact-resitant plastic of premium quality and is filled with washers and pins according to DIN 125 and DIN 94, for bolts / clevises / clevis joints.
Contains 1480 pieces.
Box size 337 x 262 x 56 mm. Weight 4.9 kg.

Washer Size	Amount	Pin Size	Amount
A4.3	100	1 x 10	200
A5.3	100	1.6 x 16	100
A6.4	100	2 x 16	100
A8.4	100	3.2 x 20	100
A 10.5	100	4 x 32	100
A 13.0	100	5 x 45	100
A 15.0	100		
A 17.0	30		
A 19.0	25		
A 21.0	25		

Product No. 618 000 03

Product No. 618 000 03



Assortment Box Feather Keys According to DIN 6885 Version A and shaft Collars

Materials: Feather keys from steel C45K, single split shaft collars from steel, burnished.

The assortment box is made from impact-resitant plastic of premium quality and is filled with feather keys and clamp collars.
Contains 316 pieces.
Box size 240 x 193 x 42 mm. Weight 2.05 kg.

Product	Size	Amount
Parallel keys	3 x 3 x 12	40
Parallel keys	3 x 3 x 20	40
Parallel keys	4 x 4 x 15	30
Parallel keys	4 x 4 x 20	30
Parallel keys	5 x 5 x 15	20
Parallel keys	5 x 5 x 20	20
Parallel keys	5 x 5 x 25	20
Parallel keys	5 x 5 x 30	15
Parallel keys	6 x 6 x 25	15
Parallel keys	6 x 6 x 30	15
Parallel keys	6 x 6 x 40	15
Parallel keys	8 x 7 x 25	15
Parallel keys	8 x 7 x 40	10
Parallel keys	10 x 8 x 40	6
Clamp Collars	6 mm Bore	8
Clamp Collars	8 mm Bore	8
Clamp Collars	10 mm Bore	5
Clamp Collars	12 mm Bore	4

Product No. 618 000 00

Product No. 618 000 00



Feather Keys According to DIN 6885

Material: C45K.

Version A.

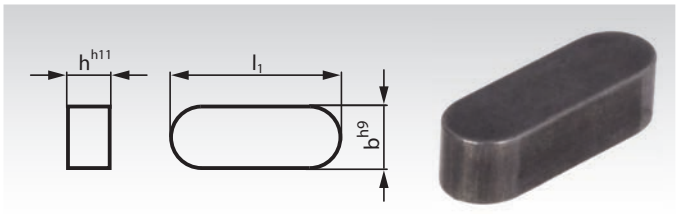

Ordering Details: e.g.: Product No. 618 002 00, Feather Keys, 2 x 2 x 6 mm

Product No.	b h9 mm	h mm	l1 mm	Weight g
618 002 00	2	2	6	0,2
618 003 00	2	2	8	0,3
618 004 00	2	2	10	0,3
618 005 00	2	2	12	0,4
618 006 00	2	2	14	0,4
618 007 00	2	2	15	0,5
618 008 00	2	2	16	0,5
618 009 00	2	2	18	0,6
618 010 00	2	2	20	0,6
618 011 00	2	2	22	0,7
618 012 00	2	2	25	0,8
618 030 00	3	3	8	0,6
618 031 00	3	3	10	0,7
618 032 00	3	3	12	0,8
618 034 00	3	3	14	1,0
618 035 00	3	3	15	1,1
618 036 00	3	3	16	1,1
618 037 00	3	3	18	1,3
618 038 00	3	3	20	1,4
618 039 00	3	3	22	1,6
618 040 00	3	3	25	1,8
618 041 00	3	3	28	2,0
618 042 00	3	3	30	2,1
618 063 00	4	4	10	1,3
618 064 00	4	4	12	1,5
618 065 00	4	4	14	1,8
618 066 00	4	4	15	1,9
618 067 00	4	4	16	2,0
618 068 00	4	4	18	2,3
618 069 00	4	4	20	2,5
618 070 00	4	4	22	2,8
618 071 00	4	4	25	3,1
618 072 00	4	4	28	3,5
618 073 00	4	4	30	3,8
618 094 00	5	5	12	2,4
618 095 00	5	5	14	2,7
618 096 00	5	5	15	2,9
618 097 00	5	5	16	3,1
618 098 00	5	5	18	3,5
618 099 00	5	5	20	3,9
618 100 00	5	5	22	4,3
618 101 00	5	5	25	4,9
618 102 00	5	5	28	5,5
618 103 00	5	5	30	5,9
618 104 00	5	5	35	6,9
618 105 00	5	5	40	7,9
618 106 00	5	5	45	8,8
618 107 00	5	5	50	9,8
618 118 00	6	6	14	3,9
618 119 00	6	6	15	4,2
618 120 00	6	6	16	4,5
618 121 00	6	6	18	5,1
618 122 00	6	6	20	5,7
618 123 00	6	6	22	6,2
618 124 00	6	6	25	7,1
618 125 00	6	6	28	7,9
618 126 00	6	6	30	8,5
618 127 00	6	6	35	9,9
618 128 00	6	6	40	11,3
618 129 00	6	6	45	12,7
618 130 00	6	6	50	14,1
618 131 00	6	6	55	15,5
618 132 00	6	6	60	17,0
618 146 00	8	7	20	8,8
618 147 00	8	7	22	9,7
618 148 00	8	7	25	11,0
618 149 00	8	7	28	12,3
618 150 00	8	7	30	13,2
618 151 00	8	7	35	15,4
618 152 00	8	7	40	17,6
618 153 00	8	7	45	19,8
618 154 00	8	7	50	22,0
618 155 00	8	7	55	24,2
618 156 00	8	7	60	26,4
618 171 00	10	8	25	15,7
618 172 00	10	8	28	17,6
618 173 00	10	8	30	18,8
618 174 00	10	8	35	22,0
618 175 00	10	8	40	25,1
618 176 00	10	8	45	28,3
618 177 00	10	8	50	31,4
618 178 00	10	8	55	34,5
618 179 00	10	8	60	37,7
618 197 00	12	8	35	26,4
618 198 00	12	8	40	30,1
618 199 00	12	8	45	33,9
618 200 00	12	8	50	37,7
618 201 00	12	8	55	41
618 202 00	12	8	60	45
618 203 00	12	8	65	49
618 204 00	12	8	70	53
618 211 00	14	9	40	40
618 212 00	14	9	45	45
618 213 00	14	9	50	49
618 214 00	14	9	55	54
618 215 00	14	9	60	59
618 216 00	14	9	65	64
618 217 00	14	9	70	69
618 218 00	14	9	75	74
618 219 00	14	9	80	79
618 228 00	16	10	45	57
618 229 00	16	10	50	63
618 230 00	16	10	55	69
618 231 00	16	10	60	75
618 232 00	16	10	65	82
618 233 00	16	10	70	88
618 234 00	16	10	75	94
618 235 00	16	10	80	100
618 246 00	18	11	50	78
618 247 00	18	11	55	85
618 248 00	18	11	60	93
618 249 00	18	11	65	101
618 250 00	18	11	70	109
618 251 00	18	11	75	117
618 252 00	18	11	80	124

Bright Key Steel DIN 6880

Material: C45K.

Standard length about 1000 mm.

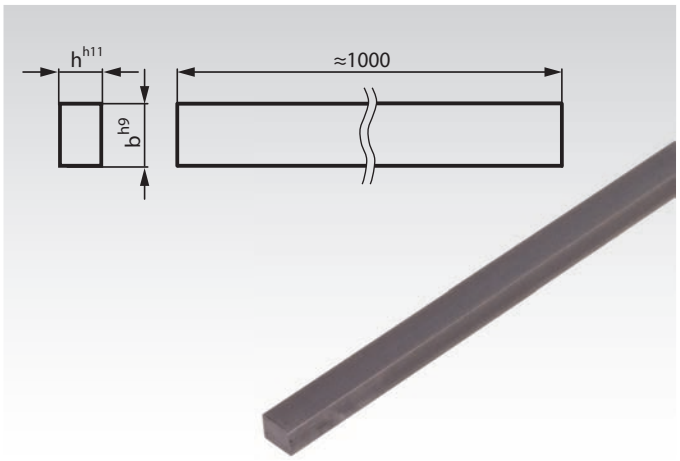

Ordering details: e.g.: Product No. 618 902 02, Bright Key Steel DIN 6880, 2x2x1000 mm

Product No.	b h9 mm	h h11 mm	Weight g
618 902 02	2	2	31
618 903 03	3	3	71
618 904 04	4	4	126
618 905 05	5	5	196
618 906 06	6	6	283
618 908 07	8	7	440
618 908 08	8	8	502
618 910 08	10	8	628
618 910 10	10	10	785
618 912 08	12	8	754
618 912 12	12	12	1130
618 914 09	14	9	989
618 916 10	16	10	1256
618 918 11	18	11	1554
618 920 12	20	12	1884

Feather Keys According to DIN 6885, Stainless

Material: Stainless steel 1.4571.
Version A.

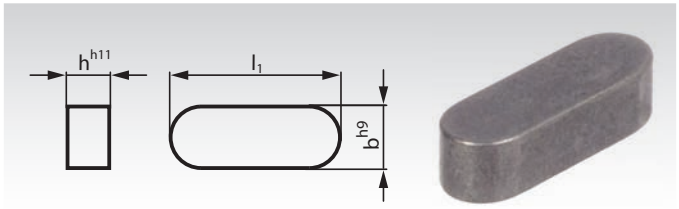

Ordering Details: e.g.: Product No 618 990 30, Feather Keys, 3 x 3 x 8 mm, Stainless

Product No.	b h9 mm	h mm	l_1 mm	Weight g
618 990 30	3	3	8	0,6
618 990 31	3	3	10	0,7
618 990 32	3	3	12	0,8
618 990 36	3	3	16	1,1
618 990 38	3	3	20	1,4
618 990 40	3	3	25	1,8
618 990 63	4	4	10	1,3
618 990 64	4	4	12	1,5
618 990 67	4	4	16	2,0
618 990 69	4	4	20	2,5
618 990 71	4	4	25	3,1
618 990 72	4	4	28	3,5
618 990 73	4	4	30	3,8
618 990 94	5	5	12	2,4
618 990 97	5	5	16	3,1
618 990 99	5	5	20	3,9
618 991 01	5	5	25	4,9
618 991 02	5	5	28	5,5
618 991 03	5	5	30	5,9
618 991 05	5	5	40	7,9
618 991 06	5	5	45	8,8
618 991 07	5	5	50	9,8
618 991 20	6	6	16	4,5

Product No.	b h9 mm	h mm	l_1 mm	Weight g
618 991 22	6	6	20	5,7
618 991 24	6	6	25	7,1
618 991 25	6	6	28	7,9
618 991 26	6	6	30	8,5
618 991 28	6	6	40	11,3
618 991 29	6	6	45	12,7
618 991 30	6	6	50	14,1
618 991 46	8	7	20	8,8
618 991 48	8	7	25	11,0
618 991 49	8	7	28	12,3
618 991 50	8	7	30	13,2
618 991 52	8	7	40	17,6
618 991 53	8	7	45	19,8
618 991 54	8	7	50	22,0
618 991 71	10	8	25	15,7
618 991 72	10	8	28	17,6
618 991 73	10	8	30	18,8
618 991 75	10	8	40	25,1
618 991 76	10	8	45	28,3
618 991 77	10	8	50	31,4
618 991 98	12	8	40	30,1
618 991 99	12	8	45	33,9
618 992 00	12	8	50	37,7

Bright Key Steel DIN 6880, Stainless

Material: Stainless steel 1.4571.
Standard length about 1000 mm.

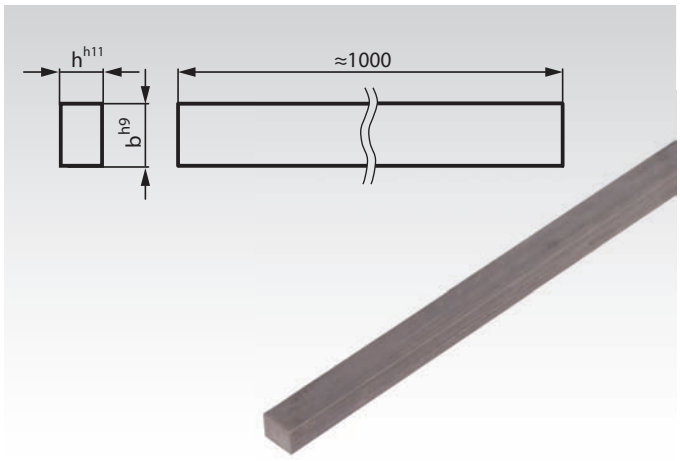

Ordering Details: e.g.: Product No. 619 902 02, Key Steel DIN 6880, Stainless, 2 x 2 x 1000 mm

Product No.	b h9 mm	h h11 mm	Weight g
619 902 02	2	2	31
619 903 03	3	3	70
619 904 04	4	4	125
619 905 05	5	5	195
619 906 06	6	6	280
619 908 07	8	7	438

Product No.	b h9 mm	h h11 mm	Weight g
619 910 08	10	8	626
619 912 08	12	8	750
619 914 09	14	9	984
619 916 10	16	10	1250
619 918 11	18	11	1560
619 920 12	20	12	1880

Edge Trims

Material: PVC/Steel.

Edge trims simplify the protection of edges, save time in preparatory and subsequent work, and cover sharp edges. They also have a decorative effect.

The substructure of the edge trim contains steel metal clips or a wire construction. This means they have a strong hold even if there are radii or bent parts. Edge trims are mounted on the edges to be covered by hand or with a plastic mallet. Glues or special mounting parts are not required.

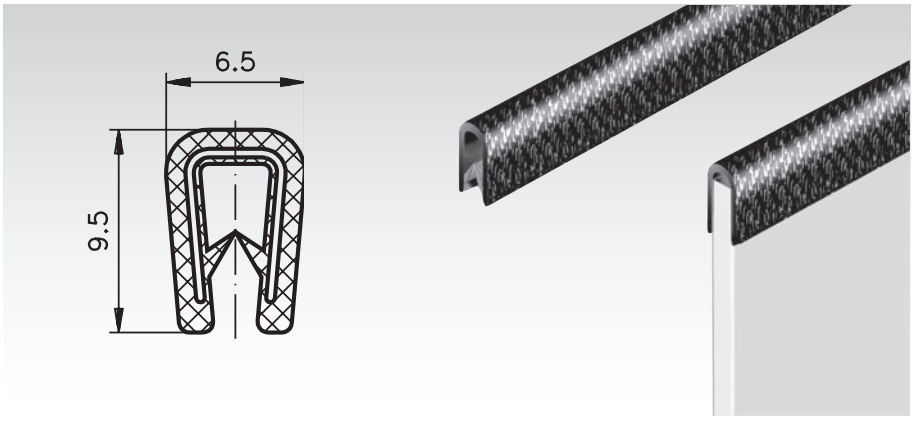

Product No.	Clamp Range mm	Colour	Maximum Length m	Weight g/m
687 010 00	1,0 - 2,0	black	100	65

Ordering Details: e.g.: Product No. 687 010 00, Edge Trim

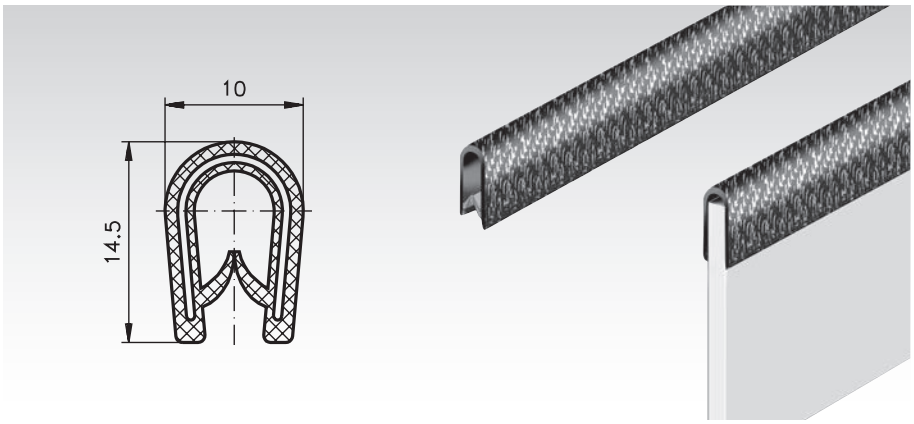

Product No.	Clamp Range mm	Colour	Maximum Length m	Weight g/m
687 020 00	1,0 - 4,0	black	50	140

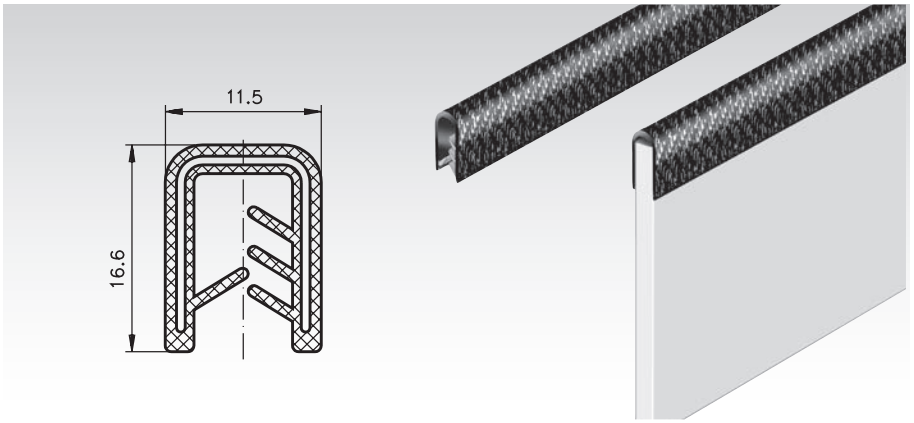

Product No.	Clamp Range mm	Colour	Maximum Length m	Weight g/m
687 030 00	4,0 - 6,0	black	100	160

Minimum Bending Radii

Please note that the stated minimum bending radii are only reference values that can vary depending on the material, the clamp range and the application in which the profile is used.

Product No.	a mm	b mm	c mm	d mm
687 010 00	15	15	10	10
687 020 00	30	20	20	20
687 030 00	50	40	30	30

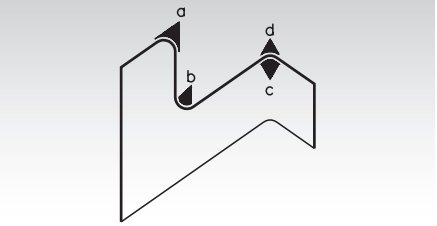

Trim Seals

Material: PVC/EPDM/Steel.

Trim seals are a combination of edge trims made from PVC with a substructure of metal clips and sealed on EPDM-foam rubber.

These profiles serve a double function:
1.Easy covering of construction-conditioned sharp edges.
2. The sealing effect.The foam rubber strips or hollow section are highly flexible and can seal doors and lids. The mounting is done as with edge trims.

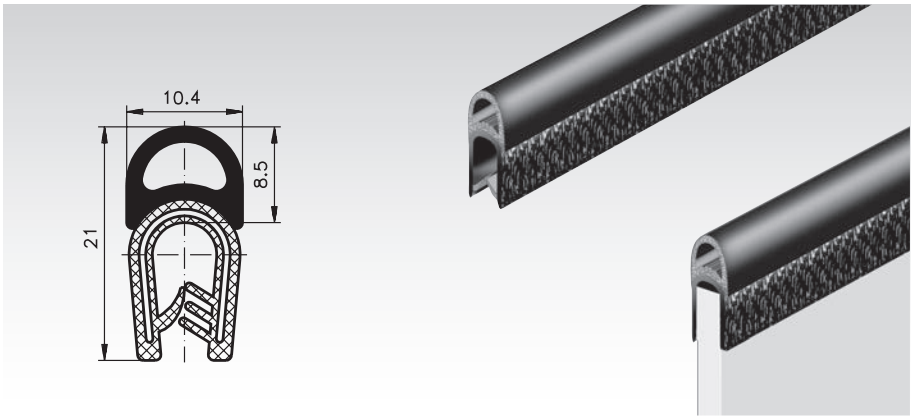

Ordering Details: e.g.: Product No. 687 140 00, Trim Seal

Product No.	Clamp Range mm	Colour	Maximum Length m	Weight g/m
687 140 00	1,0 - 4,0	black	100	175

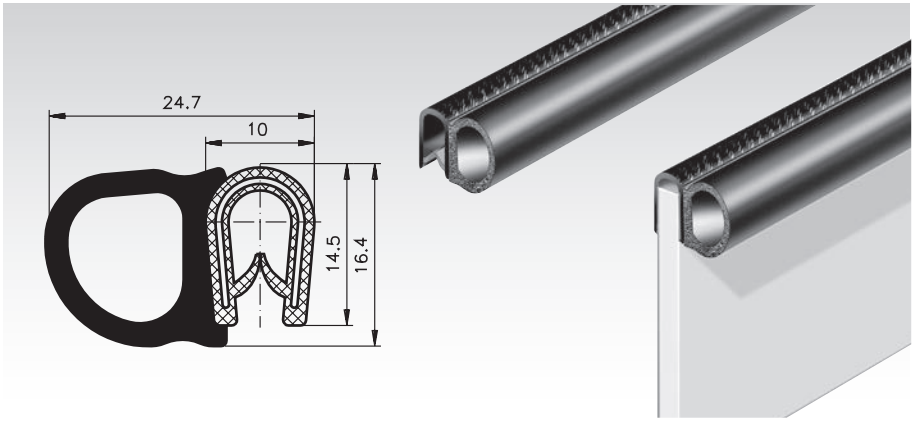

Product No.	Clamp Range mm	Colour	Maximum Length m	Weight g/m
687 150 00	1,0 - 4,0	black	100	180

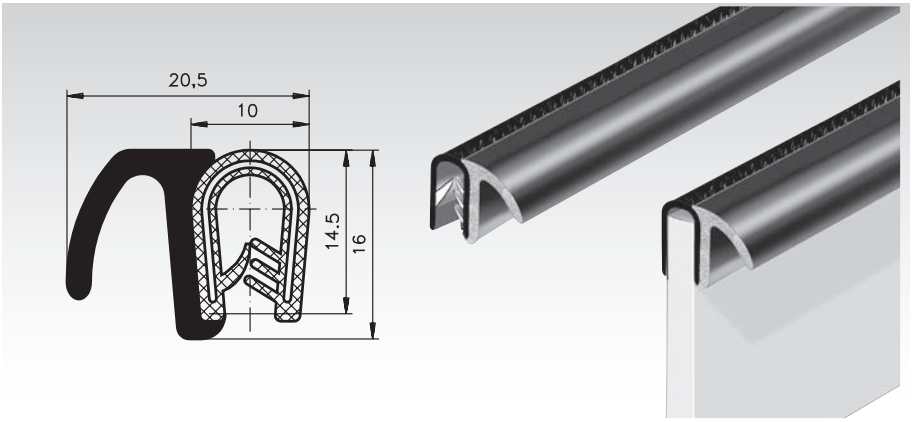

Product No.	Clamp Range mm	Colour	Maximum Length m	Weight g/m
687 160 00	1,0 - 4,0	black	100	170

Minimum Bending Radii

Please note that the stated minimum bending radii are only reference values that can vary depending on the material, the clamp range and the application in which the profile is used.

Product No.	a mm	b mm	c mm	d mm
687 140 00	70	80	15	15
687 150 00	50	30	100	120
687 160 00	40	40	150	150

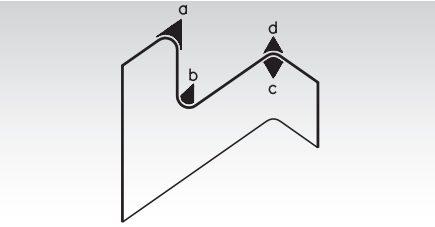

Function

Tightening the activating screw makes the gas generator drop into the electrolyte fluid, where it starts a chemical reaction that builds up pressure and causes the piston to move forward. The lubricant is continuously injected into the lubrication point. When the lubrication cartridge is empty, the coloured piston becomes clearly visible. The initial delay between activation and the first discharge of lubricant depends on the perma® type. Lubricant volume 120 cm^3. The activator screw and the lubricator have to be ordered seperately.

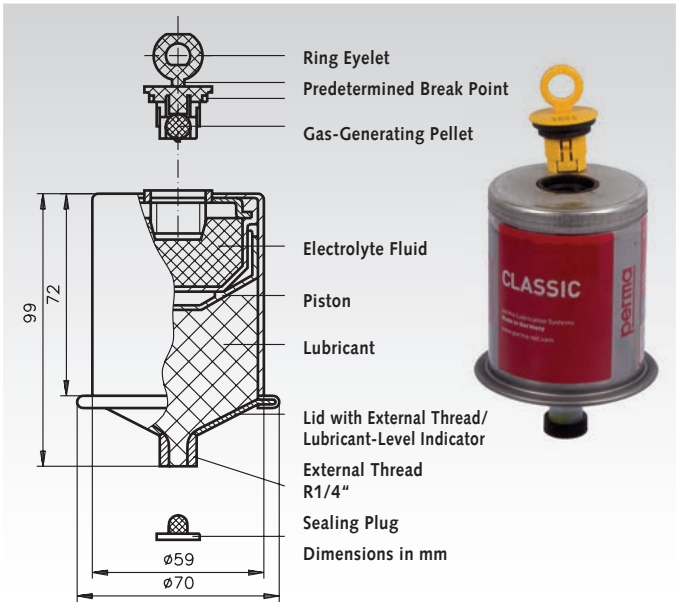

perma® Activator Screws

Material: Body of screw from plastic.

The lubrication period is determined by the different coloured activator screws. The lubricator has to be ordered seperately.

Ordering Details: e.g.: Product No. 680 510 01, Perma Activator Screw Type 1

Product No.	Type	Period of Lubrication	Colour
680 510 01	1	1 Month	yellow
680 510 03	3	3 Months	green
680 510 06	6	6 Months	red
680 510 12	12	12 Months	grey

perma® Lubricators

Material: Housing made from steel sheet.

The code for the lubricant contained is stamped into the bottom of the housing (e.g. SF 01 = all-purpose grease). The activator screw has to be ordered seperately. Weight 265 g.

Ordering Details: e.g.: Product No. 680 500 01, Perma Lubricator Type SF01

									Recommendation of Application						
Product No.	Type	Lubricant	DIN 51 502	NLGI-Grade	Thickener	Basis Oil	Temperature Range	Viskosity at +40°C	Roller Bearings	Plain Bearings	Linear Motion	Gears and Racks	Spindle Drives	Sealings	Roller Chain Drives
680 500 01	SF01	Multipurpose Grease	KP2K-30	2	Li / Ca	Mineral	-30° / +130°C	220	X	X	X		X	X	
680 500 02	SF02	Extreme Pressure Grease	KPF2K-30	2	Li + MoS2	Mineral	-30° / +120°C	105		X		X			
680 500 03	SF03	High Temperature Grease	KE1T-20	2	PHS + solids	Ester + PFPE	-20° / +220°C	420	X	X					
680 500 04	SF04	High Performance Grease	K1S-20	0/1	PHS	Mineral + PAO	-20° / +160°C	500	X	X	X		X		
680 500 05	SF05	High Temp./High Pressure	KPF1S-20	0/1	PHS + MoS2	Mineral + PAO	-20° / +160°C	500	X	X		X			
680 500 06	SF06	Liquid Grease	K0G-20	0	Al.-Kom.	Mineral	-20° / +130°C	220	X	X	X			X	
680 500 08	SF08	High Speed Grease	KHC2N-50	2	Ca-Kom.	PAO	-40° / +140°C	100	X	X					
680 500 10	SF10	Food Grade Grease	K1K-40	1	Al-Kom.	PAO	-20° / +220°C	150	X	X	X	X			
680 500 14	SO14	High Performance Oil	CLPE320	Oil	-	PAO + Ester	-20° / +250°C	320							X

Accessories

Product No.	Description Accessory	Weight g
680 540 00	Bracket	16
680 547 00	Oil throttle G 1/4	27
680 543 00	Extension G 1/4, 30 mm long	25
680 545 00	Oil brush Ø 20 mm, R 1/4 internal thread	34
680 546 00	Oil brush of horsehair, Width 30 x 40 mm long, R 1/4 internal thread	38

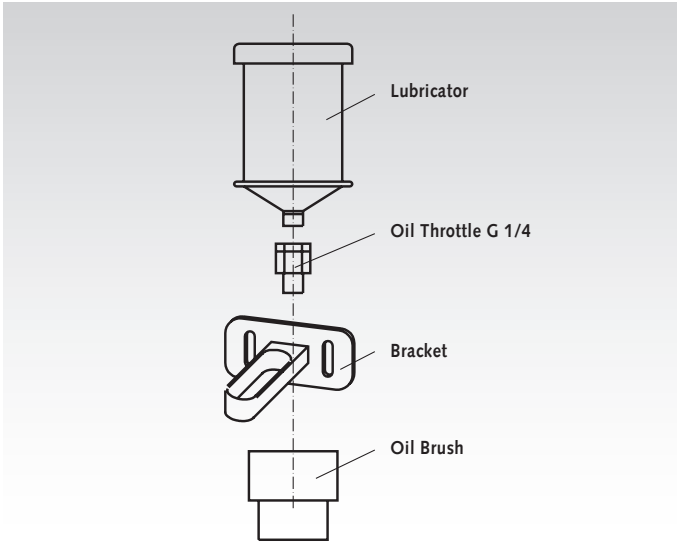

On request, the lubricator can also be supplied with transparent plastic housing.

Drip-Feed Oilers System Unikum with Adjustment from Top

Material: pickled brass. Vase glasses up to Ø 80 mm made from acrylic glass, above made from natural glass.

With instantaneous shutting off, with turnable replenishing bowl, easy visual inspection of drop fall.

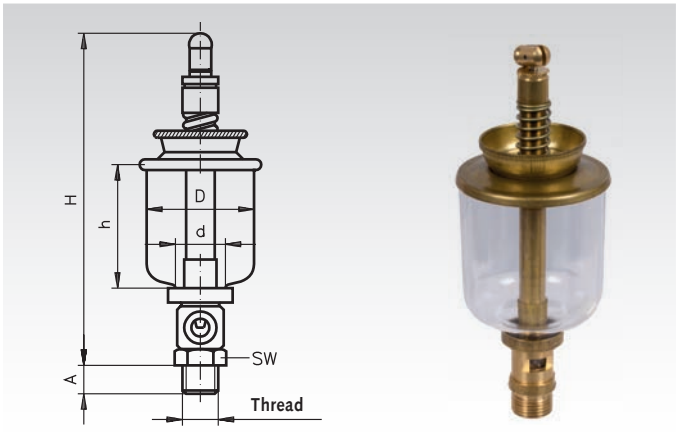

Ordering Details: e.g.: Product No. 680 401 00, Drip-Feed Oiler Unikum, R 1/4"

Product No. Complete Unit	Capacity cm^3	Thread Inch	A mm	D mm	d mm	H mm	h mm	Weight g	Product No. Spare glass	Weight g
680 401 00	20	R 1/4"	11	32	20	120	42	100	**680 421 00**	6
680 402 00	20	R 1/8"	11	32	20	120	42	100	**680 422 00**	6
680 403 00	35	R 1/4"	11	40	20	125	48	120	**680 423 00**	10
680 404 00	35	R 3/8"	11	40	20	130	48	120	**680 424 00**	10
680 405 00	65	R 3/8"	12	50	20	135	55	125	**680 425 00**	15
680 406 00	115	R 1/2"	14	60	28	165	72	200	**680 426 00**	35
680 407 00	200	R 1/2"	14	70	28	190	85	260	**680 427 00**	50
680 408 00	280	R 1/2"	14	80	28	190	95	420	**680 428 00**	70
680 409 00	450	R 3/4"	16	90	28	210	110	630	**680 429 00**	270
680 410 00	600	R 3/4"	16	100	28	225	120	730	**680 430 00**	400
680 411 00	880	R 3/4"	16	110	28	250	140	850	**680 431 00**	500

Drip-Feed Oilers UNI with Adjustment at Top

Material: Brass, nickel-plated. Glass cylinder made from acryl.

Advantages of these drip-feed oilers: drip rate can be precisely adjusted, instantaneous shutting off, stainless valve needle (brass), large filler spout with dust cover.

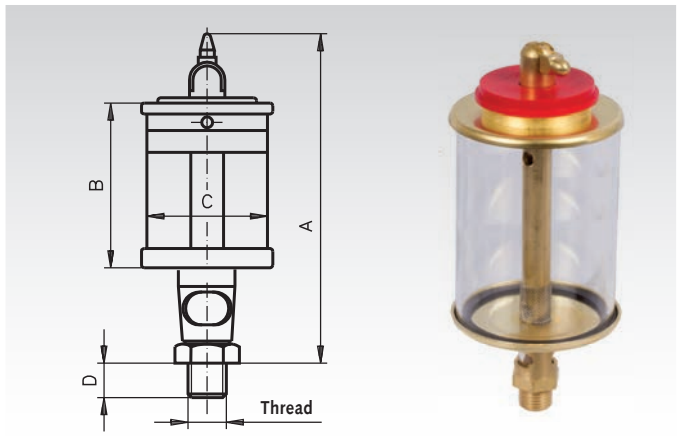

Ordering Details: e.g.: Product No. 680 202 00, Drip-Feed Oiler UNI, R 1/8"

Product No. Complete Unit	Capacity cm^3	Thread Inch	A mm	B mm	C mm	D mm	Weight g	Product No. Spare Glass	Weight g
680 202 00	10	R 1/8"	80	39	25	9	100	**680 212 00**	3
680 203 00	20	R 1/8"	85	42	30	9	100	**680 213 00**	5
680 204 00	36	R 1/4"	120	54	40	11	160	**680 113 00**	9
680 205 00	84	R 1/4"	120	55	50	11	200	**680 115 00**	17
680 206 00	140	R 1/4"	130	65	60	11	240	**680 117 00**	40
680 207 00	200	R 1/4"	150	85	60	11	260	**680 118 00**	40
680 208 00	500	R 1/2"	185	110	80	13	500	**680 219 00**	80
680 209 00	1000	R 1/2"	210	135	100	13	620	**680 220 00**	120

Electric Drip-Feed Oilers ELO

Material: Brass nickel-plated. Glass cylinder made from acryl.

Voltage of the electromagnetic valve on choice
230V AC, 50Hz or 24V DC.

Drip rate normal: about 45 drops per 1 ml.

Duty cycle: intermittent 20%.
Protection class acc. to EN 60529: IP20.
Power consumption: 12VA (12W).

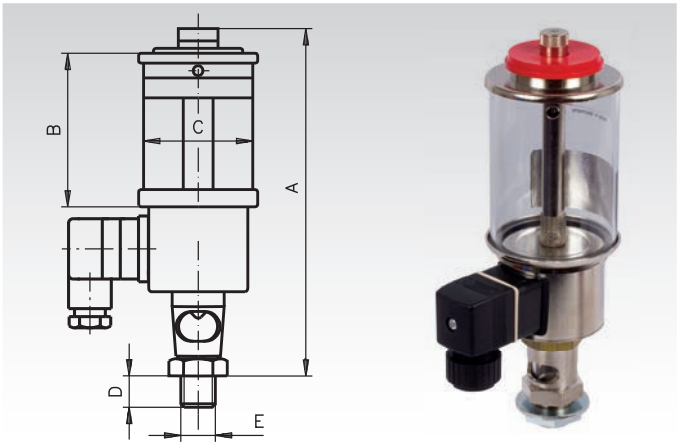

Ordering Details: e.g.: Product No. 680 301 00, Oiler ELO, 230 V, 50Hz, G 1/2“

Product No. 230V, 50Hz	Product No. 24V DC	Capacity cm³	E Inch	A mm	B mm	C mm	D mm	Weight g	Product No. Spare Glass	Weight g
680 301 00	**680 331 00**	140	G 1/2“	163	60	60	15	670	**680 117 00**	40
680 302 00	**680 332 00**	200	G 1/2“	180	80	60	15	680	**680 118 00**	40
680 304 00	**680 334 00**	500	G 1/2“	209	100	80	15	820	**680 219 00**	80
680 305 00	**680 335 00**	1000	G 1/2“	235	120	100	15	960	**680 220 00**	12
680 306 00	**680 336 00**	2000	G 1/2“	270	150	133	15	1320	**680 321 00**	220
680 307 00	**680 337 00**	3000	G 1/2“	310	180	150	15	1580	**680 322 00**	400

Other than the manual drip-feed oiler, which also drips when the machine has stopped, the electric drip-feed oiler only drips as long as the machine is running. When the machine stops, the electric drip-feed oiler is also automatically shut off, as the oiler is controlled via the machine programme. Finest dosing of drops is possible - by turning a knurled nut at the top part of the oiler.

Almost all liquids can be dosed drop by drop, provided they are not mixed with solid matters. It is also suited for other media, provided they do not thicken with heat. Attention must be paid to the compatibility with acrylic glass and buna N used as sealing material. (possibly natural glass and vitone sealings on request)

Rolling bearings are to find:

- ***in this catalog page 416***
- ***on the internet at www.maedler.de***



Oil-Level Sight Glasses 541, Plastic

Material: Housing: Polyamid (PA-T) non-ageing, highly transparent. Reflector: Aluminium, anodized in natural colour.
Seal: Rubber NBR (Perbunan®).

Temperature resistant up to 100°C.

High strength. Resistant against oil, diesel and solvents.
Not resistant against alcohol. At mounting wall thickness below 4mm, a nut is required.

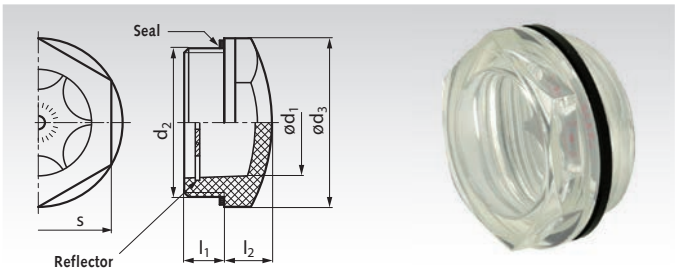

Ordering Details: e.g.: Product No. 681 835 01, Oil-Level Sight Glass 541, G 1/4“

Product No.	d_1 mm	d_2 Thread	d_3 ≈ mm	l_1 mm	l_2 mm	s mm	T_A* Nm	Weight g
681 835 01	9	G 1/4“	18	10	6	15	2 - 3	1,8
681 835 02	11	G 3/8“	22	7,5	7	19	3 - 5	4
681 835 03	11	M16 x 1,5	22	8	7	19	2 - 3	3
681 835 04	14	G 1/2“	26	10,5	8	22	4 - 6	5
681 835 05	14	M20 x 1,5	26	9,5	8	22	8 - 10	4
681 835 06	18	M25 x 1,5	31,5	8	9	27	8 - 10	9
681 835 07	18	M26 x 1,5	31,5	13	9	27	8 - 10	8
681 835 08	20	G 3/4“	31,5	10,5	9	27	6 - 8	6
681 835 09	20	M27 x 1,5	31,5	9	9	27	8 - 10	10
681 835 10	22	M30 x 1,5	35	9	10	30	8 - 10	6
681 835 11	25	G 1“	40	11	10	34	8 - 10	12
681 835 12	25	M35 x 1,5	40	11	10	34	8 - 10	13
681 835 13	30	G 1 1/4“	47,5	11,5	13	40,5	8 - 10	20
681 835 14	30	M40 x 1,5	47,5	11,5	13	40,5	8 - 10	20

* Fastening torque.

Oil-Level Sight Glasses 743 and 743.1, Aluminium

Material oil-level sight glass 743: Housing: Aluminium, polished. Reflector: Thermoplast. Temperature resistant up to 100°C.
Sight glass: Float-Glass. Seals: Rubber NBR (Perbunan®).

Material oil-level sight glass 743.1: as oil-level sight glass 743, but temperature resistant up to 180°C.
Sight glass: tempered glass.
Seals: Synthetic rubber FPM (Viton®), identification by non-black finish.

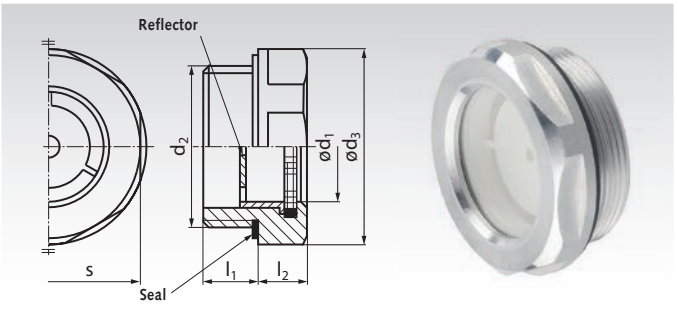

Ordering Details: e.g.: Product No. 681 801 00, Oil-Level Sight Glass 743, G 3/8“

Product No. 743	Product No. 743.1	d_1 mm	d_2 Thread	d_3 ≈ mm	l_1 mm	l_2 mm	s mm	Weight g
681 801 00	**681 821 00**	11	G 3/8“	22	8	7,5	20	9
681 802 00	**681 822 00**	11	M16 x 1,5	22	8	7,5	20	8
681 803 00	**681 823 00**	14	G 1/2“	26	8,5	7,5	23	11
681 804 00	**681 824 00**	14	M20 x 1,5	26	8,5	7,5	23	10
681 805 00	**681 825 00**	18	G 3/4“	32	9	8	30	18
681 806 00	**681 826 00**	18	M26 x 1,5	32	9	8	30	18
681 807 00	**681 827 00**	24	G 1“	40	11	8,5	36	26
681 808 00	**681 828 00**	24	M33 x 1,5	40	11	8,5	36	26
681 809 00	**681 829 00**	32	G 1 1/4“	50	12	9	46	42
681 810 00	**681 830 00**	32	M40 x 1,5	50	12	9	46	39

Oil-Level Windows SR

Material: Aluminium with inserted disk of natural glass and Perbunan® seal.

Rectangular shape, clear readability.
Also diesel-oil resistant.

Temperature resistant up to +120°C.

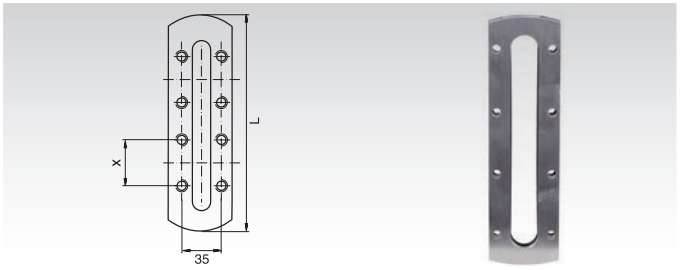

Ordering Details: e.g.: Product No. 681 130 00, Oil-Level Window SR 60, 39 x 18 mm

Product No.	Type	Sight mm	L x Width mm	Mounting Holes Quantity x mm	X mm	Weight g
681 130 00	SR 60	39 x 18	60 x 45	4 x Ø 5,5	28	55
681 131 00	SR 80	59 x 18	80 x 45	4 x Ø 5,5	45	84
681 132 00	SR 100	79 x 18	100 x 45	6 x Ø 5,5	35	108
681 133 00	SR 125	104 x 18	125 x 45	6 x Ø 5,5	45	135
681 134 00	SR 160	139 x 18	160 x 45	8 x Ø 5,5	40	170
681 135 00	SR 200	179 x 18	200 x 45	10 x Ø 5,5	40	210
681 136 00	SR 250	229 x 18	250 x 45	12 x Ø 5,5	40	270

Stauffer Grease Boxes DIN 3411

Material: Steel, blued. Top and bottom part drawn, with rolled spigot screw thread.

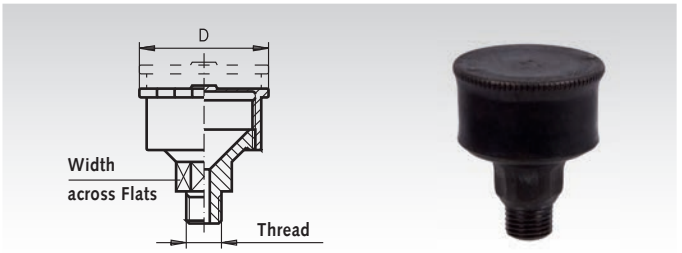

Ordering Details: e.g.: Product No. 680 001 00, Stauffer Grease Box DIN 3411, Gr. 1

Product No.	Size	Thread Inch	Width Across Flats mm	Outer Ø D mm	Weight g
680 001 00	1	R 1/8"	12	17,5	15
680 002 00	2	R 1/4"	17	24	30
680 003 00	3	R 1/4"	17	32,5	45
680 004 00	4	R 1/4"	17	38	55
680 005 00	5	R 1/4"	17	49,5	85
680 006 00	6	R 1/4"	17	58	115

Come and visit our booth at a fair and get detailed information on our entire product range. Exact dates at: www.maedler.de



Precision Levelling Adjusters

The precision levelling adjusters consist of a threaded mounting bolt (1) and a nut base (2). The fine thread design permits a precise adjustment as well as easy readjustment using the wrench spanner DIN 1810 A (page 594).

Under static load, the adjusted level is firmly fixed by tightening the mounting bolt. The Levellers with Locking Nut are recommended for dynamic loads or when no bolts are used for the mounting.

The safety screw features (3) serves as an end stop for maximum adjustment.

The use of Precision Adjusters for type MN 686.4/MN 686.7, MN 686.8/MN 686.9 and MN 686.5 facilitates precise adjustment of non-parallel surfaces.

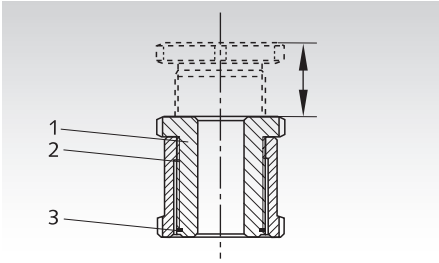

Precision Adjuster MN 686.3 and MN 686.6 Page 590

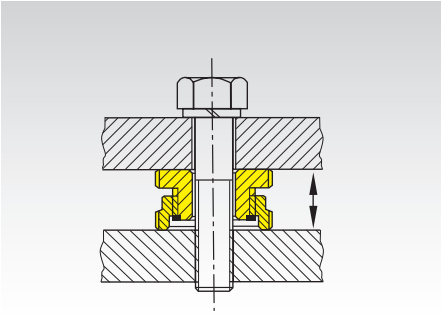

- For parallel surfaces.
- Low overall height with short adjustment travel.
- Type MN 686.3 (without lock nut): From 15mm (plus 4mm adjustment travel) to 48mm (plus 14mm adjustment travel).
- Type MN 686.6 (with lock nut): From 20mm (plus 4mm adjustment travel) to 63mm (plus 14mm adjustment travel).

Ball Head Precision Adjuster MN 686.4 and MN 686.7 Page 591

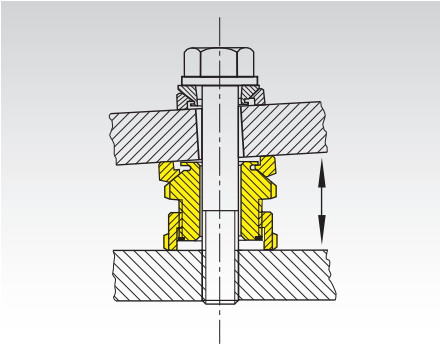

- For non-parallel surfaces up to 4° slope.
- Low overall height with short adjustment travel.
- Type MN 686.4 (without lock nut): From 22mm (plus 4mm adjustment travel) to 72mm (plus 14mm adjustment travel).
- Type MN 686.7 (with lock nut): From 27mm (plus 4mm adjustment travel) to 87mm (plus 14mm adjustment travel).

Precision Leveller MN 686.1 and MN 686.2 Page 592

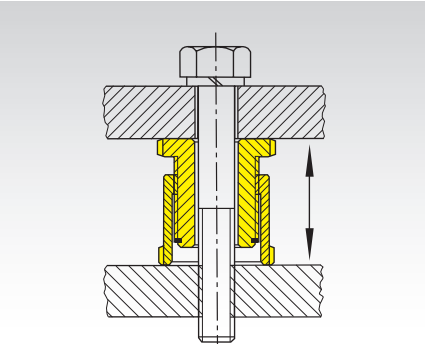

- For parallel surfaces.
- Larger overall height with more adjustment travel.
- Type MN 686.1 (without lock nut): From 28mm (plus 15mm adjustment travel) to 95 mm (plus 55mm adjustment travel).
- Type MN 686.2 (with lock nut): From 33mm (plus 10mm adjustment travel) to 110mm (plus 40mm adjustment travel).

Ball Head Precision Adjuster MN 686.8 and MN 686.9 P. 593

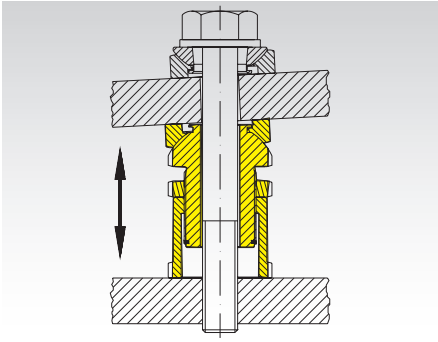

- For non-parallel surfaces up to 4° slope.
- Larger overall height with more adjustment travel.
- Type MN 686.8 (without lock nut): From 35mm (plus 15mm adjustment travel) to 119mm (plus 55mm adjustment travel).
- Type MN 686.9 (with lock nut): From 40mm (plus 10mm adjustment travel) to 134mm (plus 40mm adjustment travel).

Spacer MN 686.D Page 594

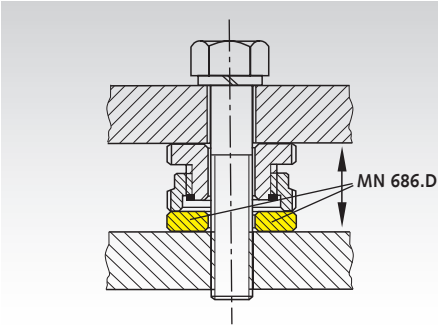

The Spacer MN 686.D is used to bridge gaps between the levelling adjuster and the bearing surface when the adjustment travel Δh is insufficient.

Ball Shim MN 686.5 Page 594

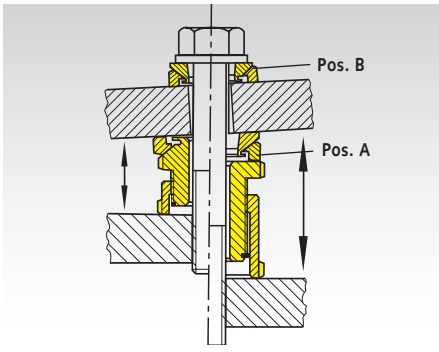

Like the ball head precision adjusters MN 686.4 the ball shim MN 686.5 (Pos. A) facilitates adjustment of non-parallel surfaces with an angle of inclination of up to 4°. If the angle of inclination $\alpha > 1°$, the use of an additional ball shim (Pos. B) is recommended to assure a stable support of the bolt head.

Notes on Mounting

All models can be assembled with a normal mounting screw, to prevent a change of position. Suitable screw sizes are provided in the dimensions tables. The screw length depends on the customers components. That's why the screw is not included. The adjustment thread is greased on all models (with high quality longlife grease), to prevent seizing.
This means that loosening / adjustment is possible even after prolonged use.

All precision levelling adjusters have a safety screw to keep them from falling apart.

Examples

Precise fixation of components at an exact level using the Precision Levelling Adjusters MN 686.3 or MN 686.1

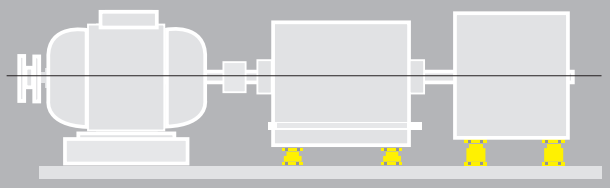

With an incline of up to about 4° the level can be adjusted by using ball head precision adjusters MN 686.4 or MN 686.8.

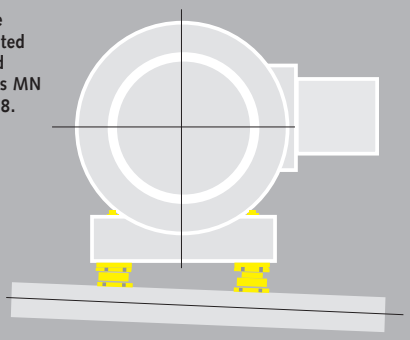

Level adjustment if there are various substructures.

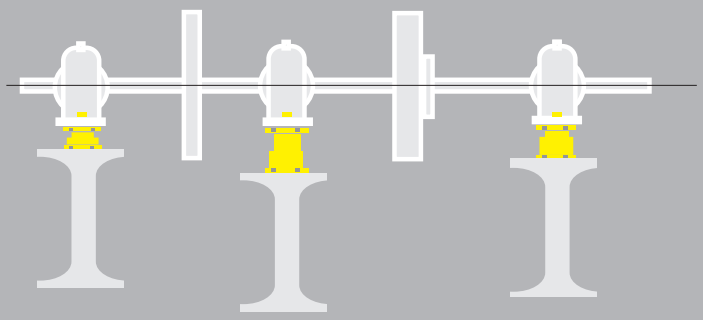

Load Table (static)

Type (Size)	Mounting Screw	standard				stainless			
		Torque[1] kN	Preload[2] kN	F add.[3] kN	F tot[4] kN	Torque[1] kN	Preload[2] kN	F add.[3] kN	F tot[4] kN
15-6,6	M6	10,1	9,3	30,7	40	7,5	6,84	20,30	27,1
20-6,6	M6	10,1	9,3	55,7	65	7,5	6,84	36,56	43,4
20-9,0	M8	24,6	17,0	48,0	65	18,2	12,5	30,90	43,4
20-11	M10	48	27,1	37,9	65	36,5	20	23,41	43,4
30-11	M10	48	27,1	92,9	120	36,5	20	64,01	84
30-13,5	M12	84	39,6	80,4	120	62	29	54,82	84
30-17,5	M16	206	74,5	45,5	120	153	55	28,90	84
40-17,5	M16	206	74	136	210	153	55	92,90	148
40-22	M20	415	120	90	210	300	89	59,10	148
40-26	M24	714	173	37	210	515	128	20,30	148
50-22	M20	415	120	210	330	300	89	136	225
50-26	M24	714	173	157	330	515	128	97	225
50-33	M30	1420	277	53	330	1031	204	20,60	225
60-26	M24	714	173	322	495	515	128	195	323
60-33	M30	1420	277	218	495	1031	204	118	323
60-39	M36	2482	394	101	495	1793	285	38	323

[1] Fastening torque (for screw strength 8.8 for standard versions or A2-70 for stainless version).

[2] The preload of any mounting screw used (tensile strength 8.8 for standard versions or A2-70 for stainless version).

[3] $F_{add.}$ = max. permissible static load, in addition to the preload of a mounting screw.

[4] $F_{tot.}$ = max. permissible total static load.

Precision Adjusters MN 686.3

Material:
Standard version: 42CrMo4V, No. 1.7225,
Surface zinc plated and chromated.

Stainless version: X10CrNiS18.9, No. 1.4305.

STAINLESS

- For parallel surfaces.
- Low overall height with short adjustment travel.
- Without lock nut.

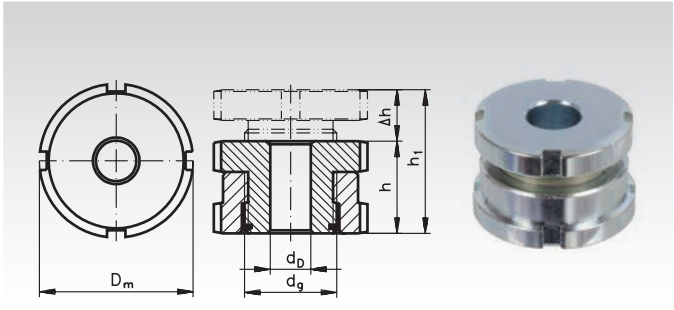

Ordering Details: e.g.: Product No. 686 305 00, MN 686.3 15-6.6 standard

Product No. standard	Product No. stainless	Type	matching screw	h mm	h1 mm	Δh mm	D_m mm	d_g mm	d_D mm	$F_{tot.}$* kN	$F_{add.}$* kN	Weight g
686 305 00	**686 993 05**	MN 686.3 15-6,6	M6	15	19	4	25	M15x1,0	6,6	40	30,7	43
686 310 00	**686 993 10**	MN 686.3 20-6,6	M6	18	23	5	32	M20x1,0	6,6	65	55,7	92
686 315 00	**686 993 15**	MN 686.3 20-9,0	M8	18	23	5	32	M20x1,0	9,0	65	48,0	90
686 320 00	**686 993 20**	MN 686.3 20-11,0	M10	18	23	5	32	M20x1,0	11,0	65	37,9	84
686 325 00	**686 993 25**	MN 686.3 30-11,0	M10	22	29	7	45	M30x1,5	11,0	120	92,9	219
686 330 00	**686 993 30**	MN 686.3 30-13,5	M12	22	29	7	45	M30x1,5	13,5	120	80,4	210
686 335 00	**686 993 35**	MN 686.3 30-17,5	M16	22	29	7	45	M30x1,5	17,5	120	45,5	196
686 340 00	**686 993 40**	MN 686.3 40-17,5	M16	28	37	9	58	M40x1,5	17,5	210	136,0	457
686 345 00	**686 993 45**	MN 686.3 40-22,0	M20	28	37	9	58	M40x1,5	22,0	210	90,0	425
686 350 00	**686 993 50**	MN 686.3 40-26,0	M24	28	37	9	58	M40x1,5	26,0	210	37,0	387
686 355 00	**686 993 55**	MN 686.3 50-22,0	M20	33	43	10	70	M50x1,5	22,0	330	210,0	780
686 360 00	**686 993 60**	MN 686.3 50-26,0	M24	33	43	10	70	M50x1,5	26,0	330	157,0	741
686 365 00	**686 993 65**	MN 686.3 50-33,0	M30	33	43	10	70	M50x1,5	33,0	330	53,0	656
686 370 00	**686 993 70**	MN 686.3 60-26,0	M24	38	50	12	80	M60x2,0	26,0	495	322,0	1135
686 375 00	**686 993 75**	MN 686.3 60-33,0	M30	38	50	12	80	M60x2,0	33,0	495	218,0	1060
686 380 00	**686 993 80**	MN 686.3 60-39,0	M36	38	50	12	80	M60x2,0	39,0	495	101,0	965

Other sizes on request.

Precision Adjusters MN 686.6

Material:
Standard version: 42CrMo4V, No. 1.7225,
Surface zinc plated and chromated.

Stainless version: X10CrNiS18.9, No. 1.4305.

STAINLESS

- For parallel surfaces.
- Low overall height with short adjustment travel.
- With lock nut.

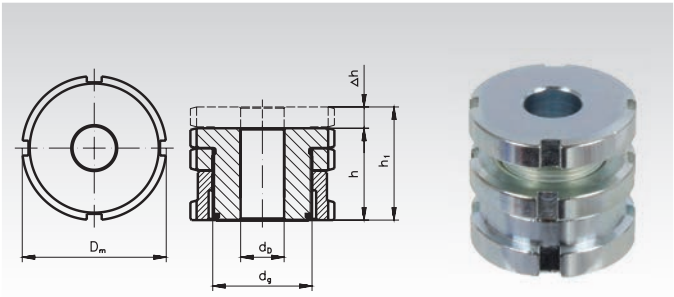

Ordering Details: e.g.: Product No. 686 605 00, MN 686.6 15-6.6 standard

Product No. standard	Product No. stainless	Type	matching screw	h mm	h1 mm	Δh mm	D_m mm	d_g mm	d_D mm	$F_{tot.}$* kN	$F_{add.}$* kN	Weight g
686 605 00	**686 996 05**	MN 686.6 15-6,6	M6	20	24	4	25	M15x1,0	6,6	40	30,7	59
686 610 00	**686 996 10**	MN 686.6 20-6,6	M6	24	29	5	32	M20x1,0	6,6	65	55,7	129
686 615 00	**686 996 15**	MN 686.6 20-9,0	M8	24	29	5	32	M20x1,0	9,0	65	48,0	121
686 620 00	**686 996 20**	MN 686.6 20-11,0	M10	24	29	5	32	M20x1,0	11,0	65	37,9	116
686 625 00	**686 996 25**	MN 686.6 30-11,0	M10	29	36	7	45	M30x1,5	11,0	120	92,9	299
686 630 00	**686 996 30**	MN 686.6 30-13,5	M12	29	36	7	45	M30x1,5	13,5	120	80,4	287
686 635 00	**686 996 35**	MN 686.6 30-17,5	M16	29	36	7	45	M30x1,5	17,5	120	45,5	262
686 640 00	**686 996 40**	MN 686.6 40-17,5	M16	37	46	9	58	M40x1,5	17,5	210	136,0	628
686 645 00	**686 996 45**	MN 686.6 40-22,0	M20	37	46	9	58	M40x1,5	22,0	210	90,0	586
686 650 00	**686 996 50**	MN 686.6 40-26,0	M24	37	46	9	58	M40x1,5	26,0	210	37,0	543
686 655 00	**686 996 55**	MN 686.6 50-22,0	M20	44	54	10	70	M50x1,5	22,0	330	210,0	1096
686 660 00	**686 996 60**	MN 686.6 50-26,0	M24	44	54	10	70	M50x1,5	26,0	330	157,0	1038
686 665 00	**686 996 65**	MN 686.6 50-33,0	M30	44	54	10	70	M50x1,5	33,0	330	53,0	932
686 670 00	**686 996 70**	MN 686.6 60-26,0	M24	49	61	12	80	M60x2,0	26,0	495	322,0	1533
686 675 00	**686 996 75**	MN 686.6 60-33,0	M30	49	61	12	80	M60x2,0	33,0	495	218,0	1428
686 680 00	**686 996 80**	MN 686.6 60-39,0	M36	49	61	12	80	M60x2,0	39,0	495	101,0	1301

Other sizes on request.

* Values apply to standard version. Values for stainless version, see page 589.
$F_{tot.}$ = max. load. (incl. preload from any mounting screw).
F_{add} = Load after subtracting the preload of any mounting screw.

Ball Head Precision Adjusters MN 686.4

Material:
Standard version: 42CrMo4V, No. 1.7225,
Surface zinc plated and chromated.

Stainless version: X10CrNiS18.9, No. 1.4305.

- For non-parallel surfaces up to 4° slope.
- Low overall height with short adjustment travel.
- Without lock nut.

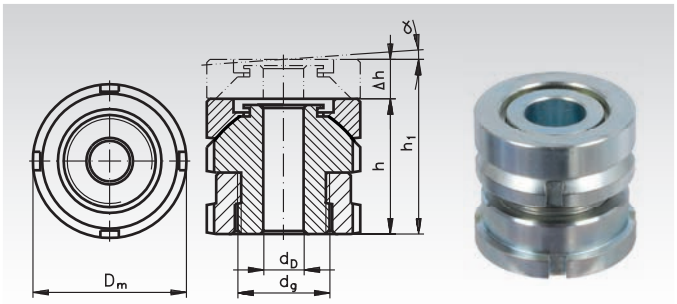

Ordering Details: e.g.: Product No. 686 405 00, MN 686.4 15-6.6 standard

Product No. standard	Product No. stainless	Type	matching screw	h mm	h1 mm	Δh mm	D_m mm	d_g mm	d_D mm	α approx.	$F_{tot.}$* kN	$F_{add.}$* kN	Weight g
686 405 00	686 994 05	MN 686.4 15-6,6	M6	22	26	4	25	M15x1,0	6,6	4°	40	30,7	64
686 410 00	686 994 10	MN 686.4 20-6,6	M6	26	31	5	32	M20x1,0	6,6	4°	65	55,7	132
686 415 00	686 994 15	MN 686.4 20-9,0	M8	26	31	5	32	M20x1,0	9,0	4°	65	48,0	126
686 420 00	686 994 20	MN 686.4 20-11,0	M10	26	31	5	32	M20x1,0	11,0	4°	65	37,9	120
686 425 00	686 994 25	MN 686.4 30-11,0	M10	34	41	7	45	M30x1,5	11,0	4°	120	92,9	340
686 430 00	686 994 30	MN 686.4 30-13,5	M12	34	41	7	45	M30x1,5	13,5	4°	120	80,4	324
686 435 00	686 994 35	MN 686.4 30-17,5	M16	34	41	7	45	M30x1,5	17,5	4°	120	45,5	299
686 440 00	686 994 40	MN 686.4 40-17,5	M16	44	53	9	58	M40x1,5	17,5	4°	210	136,0	720
686 445 00	686 994 45	MN 686.4 40-22,0	M20	44	53	9	58	M40x1,5	22,0	4°	210	90,0	667
686 450 00	686 994 50	MN 686.4 40-26,0	M24	44	53	9	58	M40x1,5	26,0	4°	210	37,0	622
686 455 00	686 994 55	MN 686.4 50-22,0	M20	50	60	10	70	M50x1,5	22,0	4°	330	210,0	1225
686 460 00	686 994 60	MN 686.4 50-26,0	M24	50	60	10	70	M50x1,5	26,0	4°	330	157,0	1170
686 465 00	686 994 65	MN 686.4 50-33,0	M30	50	60	10	70	M50x1,5	33,0	4°	330	53,0	1043
686 470 00	686 994 70	MN 686.4 60-26,0	M24	56	68	12	80	M60x2,0	26,0	4°	495	322,0	1666
686 475 00	686 994 75	MN 686.4 60-33,0	M30	56	68	12	80	M60x2,0	33,0	4°	495	218,0	1000
686 480 00	686 994 80	MN 686.4 60-39,0	M36	56	68	12	80	M60x2,0	39,0	4°	495	101,0	1181

Other sizes on request.

Ball Head Precision Adjusters MN 686.7

Material:
Standard version: 42CrMo4V, No. 1.7225,
Surface zinc plated and chromated.

Stainless version: X10CrNiS18.9, No. 1.4305.

- For non-parallel surfaces up to 4° slope.
- Low overall height with short adjustment travel.
- With lock nut.

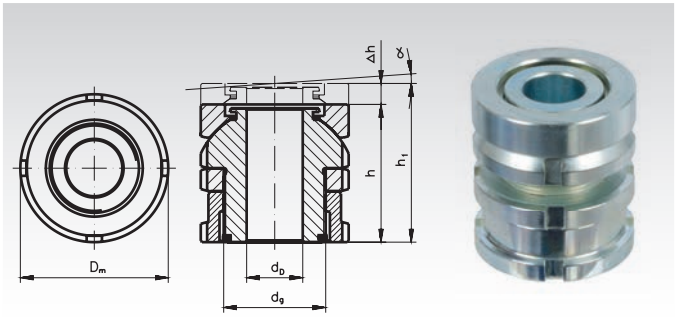

Ordering Details: e.g.: Product No. 686 705 00, MN 686.7 15-6.6 standard

Product No. standard	Product No. stainless	Type	matching screw	h mm	h1 mm	Δh mm	D_m mm	d_g mm	d_D mm	α approx.	$F_{tot.}$* kN	$F_{add.}$* kN	Weight g
686 705 00	686 997 05	MN 686.7 15-6,6	M6	27	31	4	25	M15x1,0	6,6	4°	40	30,7	84
686 710 00	686 997 10	MN 686.7 20-6,6	M6	32	37	5	32	M20x1,0	6,6	4°	65	55,7	168
686 715 00	686 997 15	MN 686.7 20-9,0	M8	32	37	5	32	M20x1,0	9,0	4°	65	48,0	166
686 720 00	686 997 20	MN 686.7 20-11,0	M10	32	37	5	32	M20x1,0	11,0	4°	65	37,9	153
686 725 00	686 997 25	MN 686.7 30-11,0	M10	41	48	7	45	M30x1,5	11,0	4°	120	92,9	421
686 730 00	686 997 30	MN 686.7 30-13,5	M12	41	48	7	45	M30x1,5	13,5	4°	120	80,4	389
686 735 00	686 997 35	MN 686.7 30-17,5	M16	41	48	7	45	M30x1,5	17,5	4°	120	45,5	356
686 740 00	686 997 40	MN 686.7 40-17,5	M16	53	62	9	58	M40x1,5	17,5	4°	210	136,0	847
686 745 00	686 997 45	MN 686.7 40-22,0	M20	53	62	9	58	M40x1,5	22,0	4°	210	90,0	782
686 750 00	686 997 50	MN 686.7 40-26,0	M24	53	62	9	58	M40x1,5	26,0	4°	210	37,0	720
686 755 00	686 997 55	MN 686.7 50-22,0	M20	61	71	10	70	M50x1,5	22,0	4°	330	210,0	1312
686 760 00	686 997 60	MN 686.7 50-26,0	M24	61	71	10	70	M50x1,5	26,0	4°	330	157,0	1238
686 765 00	686 997 65	MN 686.7 50-33,0	M30	61	71	10	70	M50x1,5	33,0	4°	330	53,0	1082
686 770 00	686 997 70	MN 686.7 60-26,0	M24	67	79	12	80	M60x2,0	26,0	4°	495	322,0	1538
686 775 00	686 997 75	MN 686.7 60-33,0	M30	67	79	12	80	M60x2,0	33,0	4°	495	218,0	1367
686 780 00	686 997 80	MN 686.7 60-39,0	M36	67	79	12	80	M60x2,0	39,0	4°	495	101,0	1194

Other sizes on request.

* Values apply to standard version. Values for stainless version, see page 589.
$F_{tot.}$ = max. load. (incl. preload from any mounting screw).
F_{add} = Load after subtracting the preload of any mounting screw.

Precision Levellers MN 686.1

Material:
Standard Version: 42CrMo4V, Nr. 1.7225,
Surface zinc plated and chromated
Stainless Steel: X10CrNiS18.9, Nr. 1.4305.

- For parallel surfaces.
- Larger overall height with more adjustment travel.
- Without lock nut.

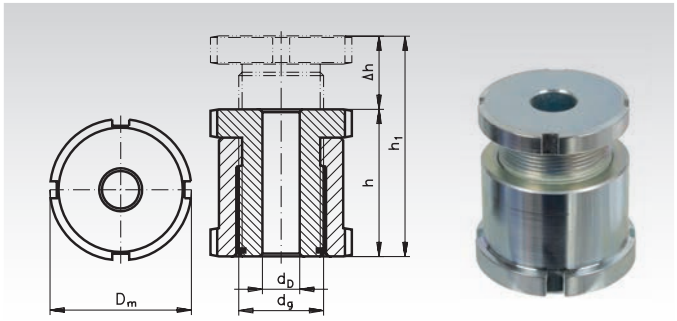

Ordering Details: e.g.: Product No. 686 105 00, MN 686.1 15-6.6 Standard

Product No. standard	Product No. stainless	Type	matching screw	h mm	h1 mm	Δh mm	D_m mm	d_g mm	d_D mm	$F_{tot.}$* kN	$F_{add.}$* kN	Weight g
686 105 00	**686 991 05**	MN 686.1 15-6,6	M6	28	43	15	25	M15x1,0	6,6	40	30,7	68,1
686 110 00	**686 991 10**	MN 686.1 20-6,6	M6	35	55	20	32	M20x1,0	6,6	65	55,7	160,9
686 115 00	**686 991 15**	MN 686.1 20-9,0	M8	35	55	20	32	M20x1,0	9,0	65	48,0	151,6
686 120 00	**686 991 20**	MN 686.1 20-11,0	M10	35	55	20	32	M20x1,0	11,0	65	37,9	143,5
686 125 00	**686 991 25**	MN 686.1 30-11,0	M10	42	67	25	45	M30x1,5	11,0	120	92,9	372,0
686 130 00	**686 991 30**	MN 686.1 30-13,5	M12	42	67	25	45	M30x1,5	13,5	120	80,4	349,3
686 135 00	**686 991 35**	MN 686.1 30-17,5	M16	42	67	25	45	M30x1,5	17,5	120	45,5	318,4
686 140 00	**686 991 40**	MN 686.1 40-17,5	M16	54	86	32	58	M40x1,5	17,5	210	136,0	782,0
686 145 00	**686 991 45**	MN 686.1 40-22,0	M20	54	86	32	58	M40x1,5	22,0	210	90,0	730,0
686 150 00	**686 991 50**	MN 686.1 40-26,0	M24	54	86	32	58	M40x1,5	26,0	210	37,0	666,4
686 155 00	**686 991 55**	MN 686.1 50-22,0	M20	66	106	40	70	M50x1,5	22,0	330	210,0	1440,0
686 160 00	**686 991 60**	MN 686.1 50-26,0	M24	66	106	40	70	M50x1,5	26,0	330	157,0	1360,0
686 165 00	**686 991 65**	MN 686.1 50-33,0	M30	66	106	40	70	M50x1,5	33,0	330	53,0	1200,0
686 170 00	**686 991 70**	MN 686.1 60-26,0	M24	76	126	50	80	M60x2,0	26,0	495	322,0	2167,0
686 175 00	**686 991 75**	MN 686.1 60-33,0	M30	76	126	50	80	M60x2,0	33,0	495	218,0	1862,0
686 180 00	**686 991 80**	MN 686.1 60-39,0	M36	76	126	50	80	M60x2,0	39,0	495	101,0	1671,0

Other sizes available on request.

Precision Levellers with Lock Nut MN 686.2

Material:
Standard Version: 42CrMo4V, Nr. 1.7225,
Surface zinc plated and chromated
Stainless Steel: X10CrNiS18.9, Nr. 1.4305.

- For parallel surfaces.
- Larger overall height with more adjustment travel.
- With lock nut.

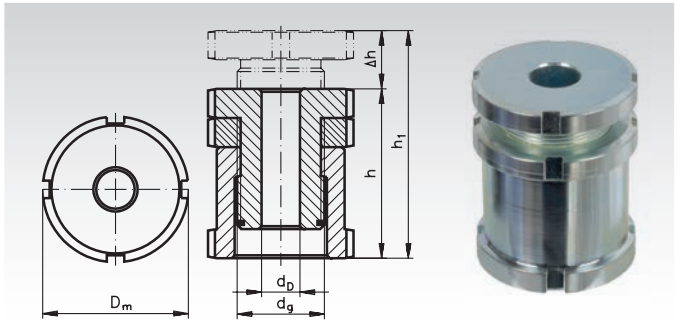

Ordering Details: e.g.: Product No. 686 205 00, MN 686.2 15-6.6 standard

Product No. standard	Product No. stainless	Type	matching screw	h mm	h1 mm	Δh mm	D_m mm	d_g mm	d_D mm	$F_{tot.}$* kN	$F_{add.}$* kN	Weight g
686 205 00	**686 992 05**	MN 686.2 15-6,6	M6	33	43	10	25	M15x1,0	6,6	40	30,7	78,0
686 210 00	**686 992 10**	MN 686.2 20-6,6	M6	41	55	14	32	M20x1,0	6,6	65	55,7	179,2
686 215 00	**686 992 15**	MN 686.2 20-9,0	M8	41	55	14	32	M20x1,0	9,0	65	48,0	172,3
686 220 00	**686 992 20**	MN 686.2 20-11,0	M10	41	55	14	32	M20x1,0	11,0	65	37,9	165,5
686 225 00	**686 992 25**	MN 686.2 30-11,0	M10	49	67	18	45	M30x1,5	11,0	120	92,9	409,1
686 230 00	**686 992 30**	MN 686.2 30-13,5	M12	49	67	18	45	M30x1,5	13,5	120	80,4	393,2
686 235 00	**686 992 35**	MN 686.2 30-17,5	M16	49	67	18	45	M30x1,5	17,5	120	45,5	365,0
686 240 00	**686 992 40**	MN 686.2 40-17,5	M16	63	86	23	58	M40x1,5	17,5	210	136,0	881,9
686 245 00	**686 992 45**	MN 686.2 40-22,0	M20	63	86	23	58	M40x1,5	22,0	210	90,0	822,9
686 250 00	**686 992 50**	MN 686.2 40-26,0	M24	63	86	23	58	M40x1,5	26,0	210	37,0	761,7
686 255 00	**686 992 55**	MN 686.2 50-22,0	M20	77	106	29	70	M50x1,5	22,0	330	210,0	1595,0
686 260 00	**686 992 60**	MN 686.2 50-26,0	M24	77	106	29	70	M50x1,5	26,0	330	157,0	1516,0
686 265 00	**686 992 65**	MN 686.2 50-33,0	M30	77	106	29	70	M50x1,5	33,0	330	53,0	1344,0
686 270 00	**686 992 70**	MN 686.2 60-26,0	M24	87	126	39	80	M60x2,0	26,0	495	322,0	2340,0
686 275 00	**686 992 75**	MN 686.2 60-33,0	M30	87	126	39	80	M60x2,0	33,0	495	218,0	2140,0
686 280 00	**686 992 80**	MN 686.2 60-39,0	M36	87	126	39	80	M60x2,0	39,0	495	101,0	1840,0

Other sizes on request.

* Values apply to standard version. Values for stainless version, see page 589.
$F_{tot.}$ = max. load. (incl. preload from any mounting screw).
F_{add} = Load after subtracting the preload of any mounting screw.

Ball Head Precision Adjusters MN 686.8

Material:
Standard version: 42CrMo4V, No. 1.7225,
Surface zinc plated and chromated.

Stainless version: X10CrNiS18.9, No. 1.4305.

STAINLESS

- For non-parallel surfaces up to 4° slope.
- Larger overall height with more adjustment travel.
- Without lock nut.

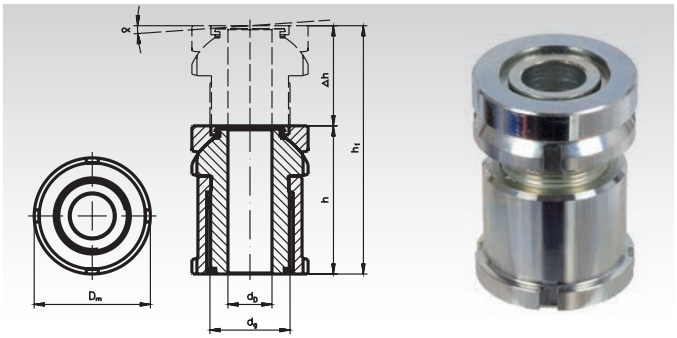

Ordering Details: e.g.: Product No. 686 805 00, MN 686.8 15-6.6 standard

Product No. standard	Product No. stainless	Type	matching screw	h mm	h1 mm	Δh mm	D_m mm	d_g mm	d_D mm	α approx.	$F_{tot.}$* kN	$F_{add.}$* kN	Weight g
686 805 00	686 998 05	MN 686.8 15-6,6	M6	35	50	15	25	M15x1,0	6,6	4°	40	30,7	100
686 810 00	686 998 10	MN 686.8 20-6,6	M6	43	63	20	32	M20x1,0	6,6	4°	65	55,7	205
686 815 00	686 998 15	MN 686.8 20-9,0	M8	43	63	20	32	M20x1,0	9,0	4°	65	48,0	195
686 820 00	686 998 20	MN 686.8 20-11,0	M10	43	63	20	32	M20x1,0	11,0	4°	65	37,9	187
686 825 00	686 998 25	MN 686.8 30-11,0	M10	54	79	25	45	M30x1,5	11,0	4°	120	92,9	492
686 830 00	686 998 30	MN 686.8 30-13,5	M12	54	79	25	45	M30x1,5	13,5	4°	120	80,4	468
686 835 00	686 998 35	MN 686.8 30-17,5	M16	54	79	25	45	M30x1,5	17,5	4°	120	45,5	437
686 840 00	686 998 40	MN 686.8 40-17,5	M16	70	102	32	58	M40x1,5	17,5	4°	210	136,0	1042
686 845 00	686 998 45	MN 686.8 40-22,0	M20	70	102	32	58	M40x1,5	22,0	4°	210	90,0	989
686 850 00	686 998 50	MN 686.8 40-26,0	M24	70	102	32	58	M40x1,5	26,0	4°	210	37,0	925
686 855 00	686 998 55	MN 686.8 50-22,0	M20	83	123	40	70	M50x1,5	22,0	4°	330	210,0	1897
686 860 00	686 998 60	MN 686.8 50-26,0	M24	83	123	40	70	M50x1,5	26,0	4°	330	157,0	1816
686 865 00	686 998 65	MN 686.8 50-33,0	M30	83	123	40	70	M50x1,5	33,0	4°	330	53,0	1652
686 870 00	686 998 70	MN 686.8 60-26,0	M24	94	144	50	80	M60x2,0	26,0	4°	495	322,0	2771
686 875 00	686 998 75	MN 686.8 60-33,0	M30	94	144	50	80	M60x2,0	33,0	4°	495	218,0	2460
686 880 00	686 998 80	MN 686.8 60-39,0	M36	94	144	50	80	M60x2,0	39,0	4°	495	101,0	2265

Other sizes on request.

Ball Head Precision Adjuster MN 686.9

Material:
Standard version: 42CrMo4V, No. 1.7225,
Surface zinc plated and chromated.

Stainless version: X10CrNiS18.9, No. 1.4305.

STAINLESS

- For non-parallel surfaces up to 4° slope.
- Larger overall height with more adjustment travel.
- With lock nut.

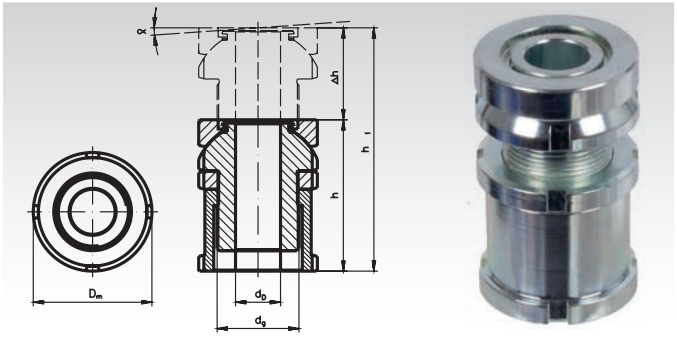

Ordering Details: e.g.: Product No. 686 905 00, MN 686.9 15-6.6 standard

Product No. standard	Product No. stainless	Type	matching screw	h mm	h1 mm	Δh mm	D_m mm	d_g mm	d_D mm	α approx.	$F_{tot.}$* kN	$F_{add.}$* kN	Weight g
686 905 00	686 999 05	MN 686.9 15-6,6	M6	40	50	10	25	M15x1,0	6,6	4°	40	30,7	110
686 910 00	686 999 10	MN 686.9 20-6,6	M6	49	63	14	32	M20x1,0	6,6	4°	65	55,7	225
686 915 00	686 999 15	MN 686.9 20-9,0	M8	49	63	14	32	M20x1,0	9,0	4°	65	48,0	216
686 920 00	686 999 20	MN 686.9 20-11,0	M10	49	63	14	32	M20x1,0	11,0	4°	65	37,9	208
686 925 00	686 999 25	MN 686.9 30-11,0	M10	61	79	18	45	M30x1,5	11,0	4°	120	92,9	537
686 930 00	686 999 30	MN 686.9 30-13,5	M12	61	79	18	45	M30x1,5	13,5	4°	120	80,4	513
686 935 00	686 999 35	MN 686.9 30-17,5	M16	61	79	18	45	M30x1,5	17,5	4°	120	45,5	482
686 940 00	686 999 40	MN 686.9 40-17,5	M16	79	102	23	58	M40x1,5	17,5	4°	210	136,0	1139
686 945 00	686 999 45	MN 686.9 40-22,0	M20	79	102	23	58	M40x1,5	22,0	4°	210	90,0	1086
686 950 00	686 999 50	MN 686.9 40-26,0	M24	79	102	23	58	M40x1,5	26,0	4°	210	37,0	1021
686 955 00	686 999 55	MN 686.9 50-22,0	M20	94	123	29	70	M50x1,5	22,0	4°	330	210,0	2050
686 960 00	686 999 60	MN 686.9 50-26,0	M24	94	123	29	70	M50x1,5	26,0	4°	330	157,0	1969
686 965 00	686 999 65	MN 686.9 50-33,0	M30	94	123	29	70	M50x1,5	33,0	4°	330	53,0	1805
686 970 00	686 999 70	MN 686.9 60-26,0	M24	105	144	39	80	M60x2,0	26,0	4°	495	322,0	2945
686 975 00	686 999 75	MN 686.9 60-33,0	M30	105	144	39	80	M60x2,0	33,0	4°	495	218,0	2634
686 980 00	686 999 80	MN 686.9 60-39,0	M36	105	144	39	80	M60x2,0	39,0	4°	495	101,0	2439

Other sizes on request.

* Values apply to standard version. Values for stainless version, see page 589
$F_{tot.}$ = max. load. (incl. preload from any mounting screw).
F_{add} = Load after subtracting the preload of any mounting screw.

Ball Shims MN 686.5

Material:
Standard Version: 42CrMo4V, Nr. 1.7225,
Surface zinc plated and chromated.

Stainless Steel: X10CrNiS18.9, Nr. 1.4305.

For an angle of inclination (alpha) of up to 4°. If the angle of inclination (alpha) exceeds > 1° out of parallel, the use of an additional MN 686.5 is recommended to assure a stable support of the bolt head. See also page 588.

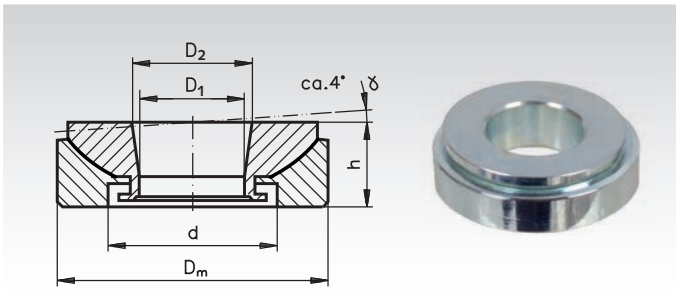

Ordering Details: e.g.: Product No. 686 505 00, MN 686.5 15 standard

Product No. standard	Product No. stainless	Type	suitable for	h mm	D_m mm	D_1 mm	D_2 mm	d mm	Weight g
686 505 00	**686 995 05**	MN 686.5 15	M6/M8	8,0	25	8,5	9,0	15	22
686 510 00	**686 995 10**	MN 686.5 20	M10	10,0	32	13,0	14,0	20	45
686 515 00	**686 995 15**	MN 686.5 30	M16	12,5	45	20,0	21,4	30	104
686 520 00	**686 995 20**	MN 686.5 40	M24	16,0	58	29,0	30,5	38	214
686 525 00	**686 995 25**	MN 686.5 50	M30	20,0	70	36,0	38,0	48	377
686 530 00	**686 995 30**	MN 686.5 60	M36	20,0	80	44,0	45,8	61	469

Spacers MN 686.D

Material:
Standard Version: 42CrMo4V, Nr. 1.7225,
Surface zinc plated and chromated.

Stainless Steel Version: X10CrNiS18.9, Nr. 1.4305.

Optional, additional spacer for height adjustment.

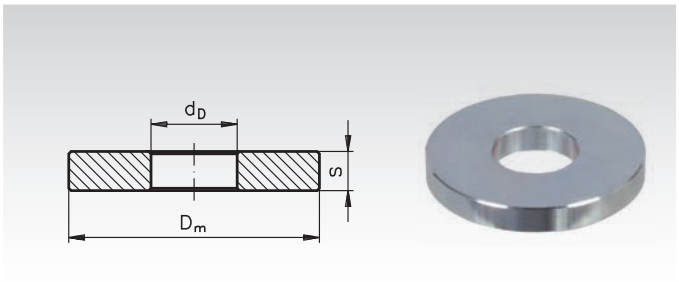

Ordering Details: e.g.: Product No. 686 555 00, MN 686.D 15 Standard

Product No. standard	Product No. stainless	Type	for Type MN 686.3, 686.4, 686.1, 686.2	D_m mm	d_D mm	s mm	Weight g
686 555 00	**686 995 55**	MN 686.D 15	...15-...	25	6,6	4	14
686 560 00	**686 995 60**	MN 686.D 20	...20-...	32	11,0	5	27
686 565 00	**686 995 65**	MN 686.D 30	...30-...	45	17,5	6	62
686 570 00	**686 995 70**	MN 686.D 40	...40-...	58	26,0	8	128
686 575 00	**686 995 75**	MN 686.D 50	...50-...	70	33,0	10	222
686 580 00	**686 995 80**	MN 686.D 60	...60-...	80	39,0	12	342

Hook Wrenches DIN 1810 A

Material:
Special steel, hardened and burnished.

Important: two spanner wrenches are required for mounting the precision levelling adjusters.



Ordering Details: e.g.: 2 Pieces, Product No. 653 400 25, Hock Wrenches 25-28mm

Product No.	D_m Range mm	for Type (Size)	Length mm	Weight g
653 400 25	25 - 28	...15-...	136	45
653 400 30	30 - 32	...20-...	136	50
653 400 45	45 - 50	...30-...	206	155
653 400 58	58 - 62	...40-...	240	260
653 400 68	68 - 75	...50-...	240	255
653 400 80	80 - 90	...60-...	280	410
653 401 10	110 - 115 (105)	...80-...	335	745

More sizes page 516

Grub Screws according to DIN 6332 with Thrust Point

Material: Steel quality 5.8, turned, thrust point hardened, burnished.

Type S: With slot.
Type SK: With internal hexagon.

Assembly: Turn thrust screw into thrust pad. The thrust pad has to be held thus that the spring retainer lies in the recess with its open side at the bottom. Now tilt the grub screw as far as possible towards the open side of the ring and press it in. To be combined with the thrust pads DIN 6311 below on this page.

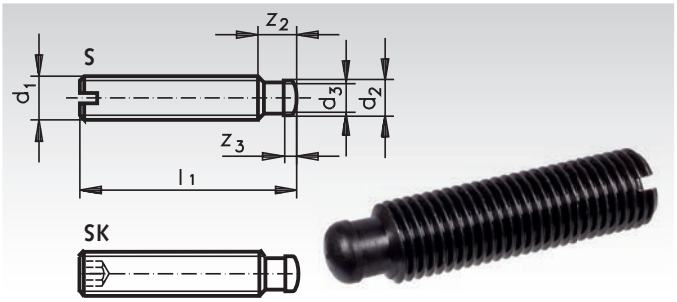

Ordering Details: e.g.: Product No. 654 006 00, Grub Screw DIN 6332, Type S, M6

Product No. Type S	Product No. Type SK	d_1 mm	l_1 mm	d_2^{h11} mm	d_3 mm	Z_2 mm	Z_3 mm	Weight g
654 006 00	654 006 01	M6	30	4,5	4	6	2,5	4,9
654 007 00	654 007 01	M6	50	4,5	4	6	2,5	8,4
654 009 00	654 009 01	M8	40	6	5,4	7,5	3	11,8
654 011 00	654 011 01	M8	60	6	5,4	7,5	3	18,1
654 013 00	654 013 01	M10	60	8	7,2	9	4,5	27,5
654 015 00	654 015 01	M10	80	8	7,2	9	4,5	37,5
654 017 00	654 017 01	M12	60	8	7,2	10	4,5	40
654 019 00	654 019 01	M12	80	8	7,2	10	4,5	55
654 020 00	654 020 01	M12	100	8	7,2	10	4,5	69
654 024 00	654 024 01	M16	80	12	11	12	5	100
654 025 00	654 025 01	M16	100	12	11	12	5	126
654 026 00	654 026 01	M16	125	12	11	12	5	160
654 030 00	654 030 01	M20	100	15,5	14,4	14	5,5	190
654 031 00	654 031 01	M20	125	15,5	14,4	14	5,5	240
654 032 00	654 032 01	M20	150	15,5	14,4	14	5,5	290

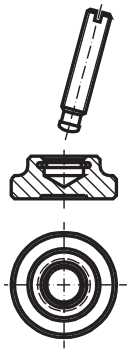

Thrust Pads with Spring Retainer according to DIN 6311 and Factory Standard

Material: Steel turned, case hardened, burnished.

Spring retainer included.

Up to size d_1= 40 mm for grub screws according to DIN 6332. from size d_1= 48 mm for grub screws according to factory standard, manufactured according to measuring table below.

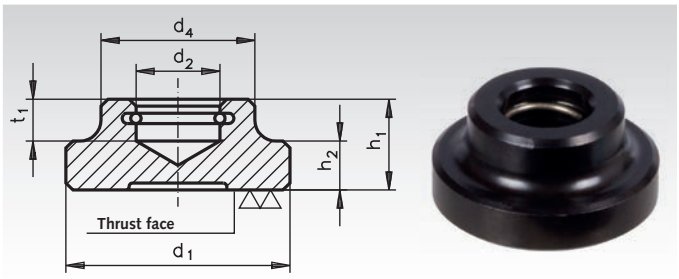

Ordering Details: e.g.: Product No. 654 106 00, Thrust Pad DIN 6311, d_1 = 12 mm

Product No.	d_1 mm	d_2^{h12} mm	d_4 mm	h_1 mm	h_2 mm	t_1 mm	f. Grub Screw/ Thrust Point	Weight g
654 106 00	12	4,6	10	7	2,5	4	DIN 6332/M6	4,4
654 108 00	16	6,1	12	9	4	5	DIN 6332/M8	9
654 110 00	20	8,1	15	11	5	6	DIN 6332/M10	17
654 112 00	25	8,1	18	13	6	7	DIN 6332/M12	33
654 116 00	32	12,1	22	15	7	7,5	DIN 6332/M16	57
654 120 00	40	15,6	28	16	9	8	DIN 6332/M20	103
654 124 00	48	17,7	32	24	12	12	Tr./M24	215
654 130 00	60	22	40	32	17	14	Tr./M28/30/32	465
654 140 00	80	30,3	60	45	25	17	Tr./M40	1287

Dimension Table for Thrust Points

For Thrust Pads d_1	d mm	d_1 mm	d_2 mm	z_1 mm	z_2 mm	r mm
48	Tr. 24	17,5	16,5	16,5	6,5	11
60	Tr. 28/30/32	21,8	20	20	8	13
80	Tr. 40	30	28,5	25	10	22

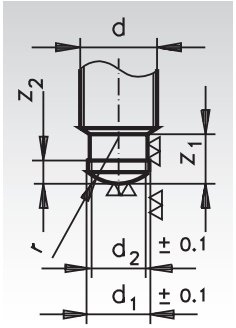

Levelling Pads 2259

Material Type A: Ball bearing: free cutting steel, induction hardened, burnished, Pad: steel, heat-treated, burnished.

Material Type D: Ball bearing: stainless steel 1.4305. Pad: Plastic POM, white, Temperature range: -30°C to +80°C.

Material Type N: Completely from stainless steel 1.4305.

STAINLESS

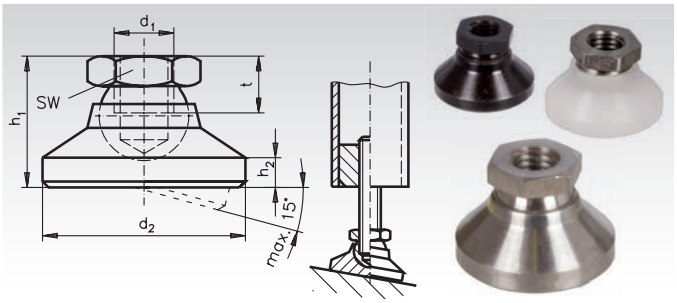

Ordering Details: e.g.: Product No. 655 206 00, Levelling Pad 2259, Type A, M6

Product No. Typ A	Product No. Typ D	Product No. Typ N	d_1 mm	d_2 mm	h_1 mm	h_2 mm	t mm	SW mm	Static Load Capacity* Typ A kN	Typ D** kN	Typ N kN	Weight Typ A g	Weight Typ D g	Weight Typ N g
655 206 00	**655 226 00**	**655 992 06**	M6	20	14	2,5	5	10	10	4	8	17,2	8,2	17,2
655 208 00	**655 228 00**	**655 992 08**	M8	25	18	4	7	13	18	7	14	36,7	17,2	36,7
655 210 00	**655 230 00**	**655 992 10**	M10	32	22	5	9	17	20	10	16	77,3	35,8	77,3
655 212 00	**655 232 00**	**655 992 12**	M12	40	26	6	11	19	35	18	28	125	54	125
655 216 00	**655 236 00**	**655 992 16**	M16	50	32	7	13,5	24	45	20	36	249	103	249
655 220 00	**655 240 00**	**655 992 20**	M20	60	42	8	17	30	55	22	44	478	205	478
655 224 00	**655 244 00**	**655 992 24**	M24	60	45	9,5	19	36	65	25	52	665	285	665

* Only suitable for compressive load.

** Figures apply to room temperature only, at higher temperatures the load bearing capacity is reduced.

Levelling Pads 2259, with external Thread

Material Type AG: Ball with threated bolt: free cutting steel, induction hardened, burnished. Pad: steel, heat-treated, burnished.

Material Type NG: Stainless steel 1.4305.

STAINLESS

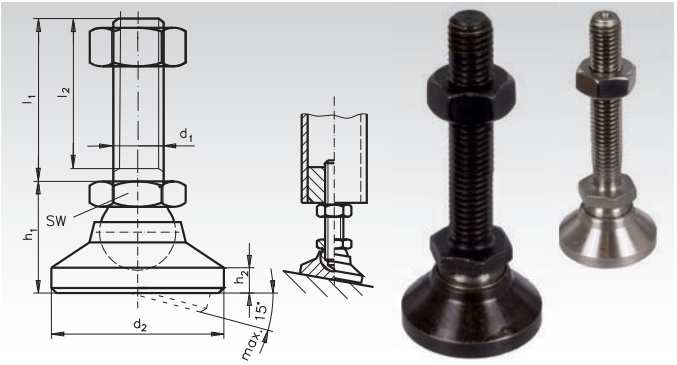

Ordering Details: e.g.: Product No. 655 206 01, Levelling Pad 2259, Type AG, M6 x 60

Product No. Typ AG	Product No. Typ NG	d_1 mm	l_1 mm	d_2 mm	l_2 mm	h_1 mm	h_2 mm	SW mm	Static Load Capacity* Typ AG kN	Typ NG kN	Weight AG, NG g
655 206 01	**655 206 91**	M6	60	20	57	14	2,5	10	10	8	29
655 208 01	**655 208 91**	M8	80	25	76	18	4	13	18	14	66
655 210 01	**655 210 91**	M10	100	32	95,5	22	5	17	20	16	133
655 210 02	**655 210 92**	M10	150	32	145,5	22	5	17	20	16	159
655 212 01	**655 212 91**	M12	100	40	94,5	26	6	19	35	28	211
655 212 02	**655 212 92**	M12	150	40	144,5	26	6	19	35	28	247
655 216 01	**655 216 91**	M16	100	50	94	32	7	24	45	36	407
655 216 02	**655 216 92**	M16	200	50	194	32	7	24	45	36	540
655 220 01	**655 220 91**	M20	100	60	92,5	42	8	30	55	44	722
655 220 02	**655 220 92**	M20	200	60	192,5	42	8	30	55	44	924
655 224 01	**655 224 91**	M24	100	60	91	45	9,5	36	65	52	935
655 224 02	**655 224 92**	M24	200	60	191	45	9,5	36	65	52	1231

* Only suitable for compressive load.

Articulated Levelling Feets 344 and 344.5 Plastic with Steel or Stainless Steel Bolt

Material Version 344: base: plastic (polyamide), glass-fibre reinforced, matt finish black.
Bolt: steel, strength class 5.8., zinc plated, chromated.
Rubber pad: NBR, hardness 70° Shore A, black.
Type A: without nut, without rubber pad, bolt steel.
Type AG: without nut, with rubber pad, bolt steel.

Material Version 344.5: Base: Plastic (polyamide), glass-fibre reinforced, matt finish black. Bolt M10, M12, M16 (SW16): 1.4305.
Bolt M20, M24: 1.4301.
Rubber pad: NBR (perbunan) 70° Shore hardness, black.
Type N: without nut, without rubber pad, bolt stainless steel.
Type NG: without nut, with rubber pad, bolt stainless steel.

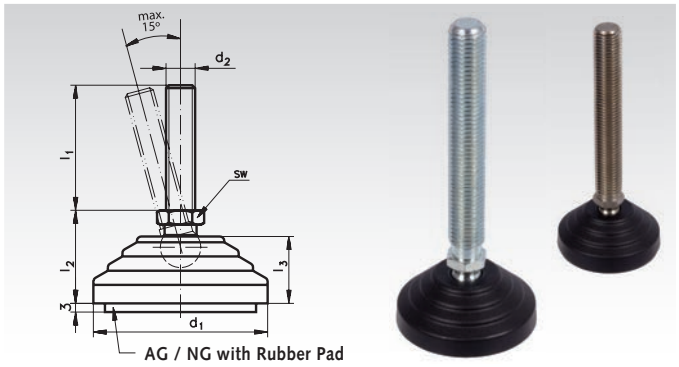

Ordering Details: e.g.: Product No. 655 301 00 Foot 344, A, Ø 60 x 43 mm

Version 344, steel		Version 344.5, stainless										
Product No. Type A	Product No. Type AG	Product No. Type N	Product No. Type NG	d_1 mm	d_2 mm	l_1 mm	l_2 mm	l_3 mm	sw mm	Ball Ø mm	Static Load N*	Weight kg
655 301 00	655 331 00	655 993 01	655 993 31	60	M10	43	32	23	14	14	14000	0,05
655 302 00	655 332 00	655 993 02	655 993 32	60	M10	68	32	23	14	14	14000	0,08
655 303 00	655 333 00	655 993 03	655 993 33	60	M10	98	32	23	14	14	14000	0,16
655 304 00	655 334 00	655 993 04	655 993 34	60	M12	43	32	23	14	14	14000	0,07
655 305 00	655 335 00	655 993 05	655 993 35	60	M12	68	32	23	14	14	14000	0,10
655 306 00	655 336 00	655 993 06	655 993 36	60	M12	98	32	23	14	14	14000	0,19
655 311 00	655 341 00	655 993 11	655 993 41	60	M16	68	32	23	16	14	14000	0,14
655 312 00	655 342 00	655 993 12	655 993 42	60	M16	108	32	23	16	14	14000	0,12
655 313 00	655 343 00	655 993 13	655 993 43	60	M16	148	32	23	16	14	14000	0,27
655 314 00	655 344 00	655 993 14	655 993 44	80	M16	68	32	23	16	14	16000	0,16
655 315 00	655 345 00	655 993 15	655 993 45	80	M16	108	32	23	16	14	16000	0,21
655 316 00	655 346 00	655 993 16	655 993 46	80	M16	148	32	23	16	14	16000	0,26
655 321 00	655 351 00	655 993 21	655 993 51	80	M20	98	42	23	24	24	18000	0,36
655 322 00	655 352 00	655 993 22	655 993 52	80	M20	138	42	23	24	24	18000	0,43
655 323 00	655 353 00	655 993 23	655 993 53	80	M20	158	42	23	24	24	18000	0,47
655 324 00	655 354 00	655 993 24	655 993 54	100	M20	98	42	23	24	24	25000	0,44
655 325 00	655 355 00	655 993 25	655 993 55	100	M20	138	42	23	24	24	25000	0,48
655 326 00	655 356 00	655 993 26	655 993 56	100	M20	158	42	23	24	24	25000	0,50
655 327 00	655 357 00	655 993 27	655 993 57	100	M24	98	42	23	24	24	25000	0,61
655 328 00	655 358 00	655 993 28	655 993 58	100	M24	158	42	23	24	24	25000	0,77
655 329 00	655 359 00	655 993 29	655 993 59	100	M24	198	42	23	24	24	25000	0,88

* Static Load

The load figures specified in the table above are guide line values. If these are exceeded, serious permanent deformation or breakage of the plastic base can occur.

These values were established through a series of tests, where with a certain number of levelling feet, a vertical force was applied on the disk for a certain time.

Dependend on the application and the load, a safety factor has to be taken into account, so that the permissable load may be below the guide line values stated in the table.

We cannot accept any liability for possible damages which could be caused by the incorrect use of the articulated feet.

General

Articulated Feet 344 and 344.5 are slightly stepped, this makes them look good and easy to clean.

Due to the use of a high grade plastic material and their shape (ribbed base), that serves to spread the weight over a larger area, the feet have a high load bearing capacity.
The rubber pad is fixed to the base with four pins/bores. The rubber pad levels out slightly uneven ground and makes the foot non-slip.

Levelling Feets 340 of Steel and 340.5 of Stainless Steel

Material Version 340: Steel, zinc plated, chromated.
Rubber pad: NBR, hardness 80 - 85° Shore A, black.

Type AG: Steel, with rubber pad.

Material Version 340.5: Stainless steel 1.4301.
Rubber pad: NBR (perbunan) 70° Shore hardness, black.

Type NG: Stainless Steel, with rubber pad.

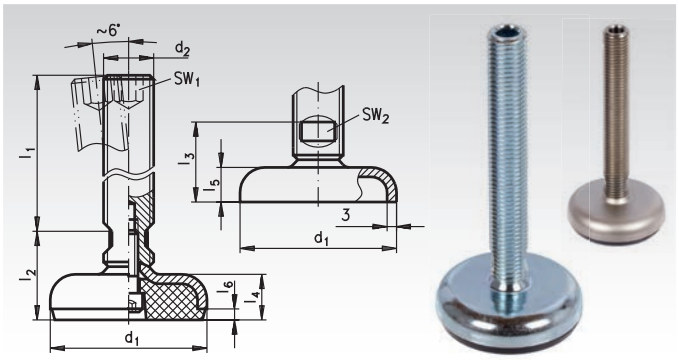

Ordering Details: e.g.: Product No. 655 741 00 Levelling Foot 340, Type AG, 50 x M16 x 75

Product No. Version 340 Zinc plated	Product No. Version 340.5 Stainless Steel	d_1 mm	d_2 mm	l_1 mm	l_2 mm	l_3 mm	approx. l_4 mm	l_5 mm	l_6 mm	sw_1 mm	sw_2 mm	Static Load* Vers. 340 kN	Vers. 340.5 kN	Weight g
655 741 00	655 997 41	50	M16	75	29	25,5	14,5	11	3,5	8	12	16	28	193
655 742 00	655 997 42	50	M16	100	29	25,5	14,5	11	3,5	8	12	16	28	270
655 743 00	655 997 43	50	M16	125	29	25,5	14,5	11	3,5	8	12	16	28	290
655 744 00	655 997 44	50	M16	150	29	25,5	14,5	11	3,5	8	12	16	28	310
655 751 00	655 997 51	60	M16	75	30	26	16	12	4	8	12	16	28	280
655 752 00	655 997 52	60	M16	100	30	26	16	12	4	8	12	16	28	300
655 753 00	655 997 53	60	M16	125	30	26	16	12	4	8	12	16	28	320
655 754 00	655 997 54	60	M16	150	30	26	16	12	4	8	12	16	28	340
655 761 00	655 997 61	80	M16	75	32	27	18	13	5	8	12	12	19	400
655 762 00	655 997 62	80	M16	100	32	27	18	13	5	8	12	12	19	450
655 763 00	655 997 63	80	M16	125	32	27	18	13	5	8	12	12	19	470
655 764 00	655 997 64	80	M16	150	32	27	18	13	5	8	12	12	19	500
655 765 00	655 997 65	80	M20	75	33	28	18	13	5	10	15	12	19	490
655 766 00	655 997 66	80	M20	100	33	28	18	13	5	10	15	12	19	525
655 767 00	655 997 67	80	M20	125	33	28	18	13	5	10	15	12	19	570
655 768 00	655 997 68	80	M20	150	33	28	18	13	5	10	15	12	19	630
655 771 00	655 997 71	100	M20	75	35	29	20	14	6	10	15	11	17	610
655 772 00	655 997 72	100	M20	100	35	29	20	14	6	10	15	11	17	660
655 773 00	655 997 73	100	M20	125	35	29	20	14	6	10	15	11	17	680
655 774 00	655 997 74	100	M20	150	35	29	20	14	6	10	15	11	17	780
655 775 00	655 997 75	100	M24	100	38	32	20	14	6	12	19	11	17	840
655 776 00	655 997 76	100	M24	125	38	32	20	14	6	12	19	11	17	890
655 777 00	655 997 77	100	M24	150	38	32	20	14	6	12	19	11	17	940

* Static Load

The static load is limited by any deformation of the steel base (3 mm thick).

The load figures specified in the table above are based on a series of tests in which a vertical load was applied on the base. At the values stated in the table, a slight deformation of the base might occur.

General

A feature of the leveling feet is the firmly bonded rubber pad in the steel foot also fixed by a screw.
The bolt can be adjusted either at the hexagon at the upper end or at the spanner flats at the bottom end.

Machine Mounts KA with Chromated Steel Plate and Vacuum Profile

Material:
Elastomer: NBR 70° Shore A, oil resistant.
Case: Steel, chromated.

Machine mounts with vacuum profile, without need for bolting down, with adjustable height.

For a first, rough calculation:

$$\frac{\text{Overall weight to be supported}}{\text{Number of mounting points}} = \text{Load per machine mount}$$

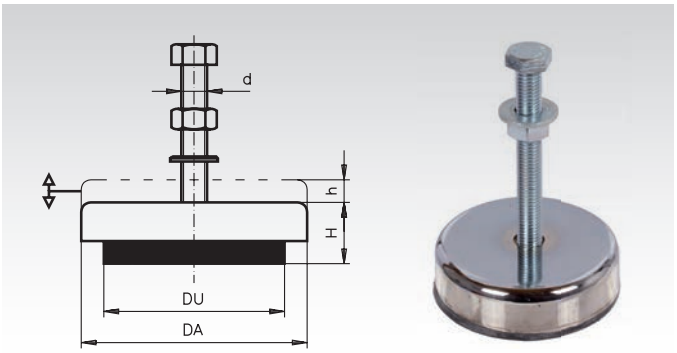

Ordering Details: e.g.: Product No. 685 912 00, Machine Mount KA 010

Product No.	Size	DA Ø mm	DU Ø mm	Height H mm	Height Adjustment h mm	Thread d mm	Thread Length mm	Weight kg
685 912 00	KA 010	73	53	30	10	M10	60	0,27
685 913 00	KA 090	90	73	35	10	M12	100	0,60
685 915 00	KA 015	120	95	35	12	M12	100	0,94
685 918 00	KA 020	150	120	40	12	M16	100	2,24
685 921 00	KA 030	200	170	45	15	M20 x 1,5	120	4,90

Load Bearing Cap.per Element (in Newton)		KA 010	KA 090	KA 015	KA 020	KA 030
General Machines		1500	4200	6500	14000	34000
Milling Machines and Lathes			2100	3500	12000	28000
Presses, Stroke/min. up to	100			4200	8000	25000
	150			2400	4000	13500
	170			1750	2500	9000
	200			1400	2000	4500
Permiss. Stat. Max. Load			6300	11000	18000	40000

Machine Mounts (Failsafe)

Material:
Elastomer: Natural rubber 60° +/-5° Shore A.
Metal parts: Steel, quality 5.6.

Failsafe machine mounts can be universally used as elastic mounts for all kind of machines. Especially if tensile forces can be expected, these failsafe mounts are the perfect choice of damping element.

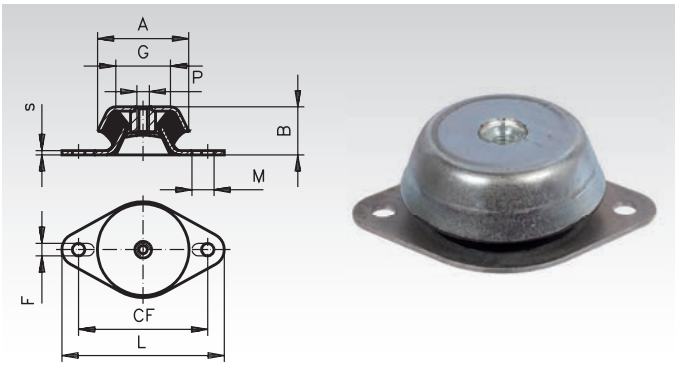

Ordering Details: e.g.: Product No. 685 950 00, Machine Mount, 77mm

Product No.	A mm	B mm	P mm	F (xM) mm	CF mm	G mm	L mm	s mm	Weight kg
685 950 00	77	30	M10	9	110	59	128	2	0,30
685 955 00	92	45	M12	10,5	110	73,5	138	3	0,69
685 960 00	106	38	M12	14 x 18	138/146	81	172	3	0,75
685 965 00	108	50	M16	16,5	160	83	190	5	1,12
685 970 00	121	42	M16	13,5	158	92	188	3	0,97

Product No.	Permissable Permanent Static Load* N	Compression mm	Spring Load N/mm
685 950 00	2700	2,8	964
685 955 00	6000	3,3	1818
685 960 00	5500	2,8	1964
685 965 00	8100	2,9	2793
685 970 00	6800	3,5	1942

The stated values are guideline values for the static load at durometer of 60° Shore A (medium).

* Tensile / compressive load. No damping for tensile load.

Rubber-Metal Bump Stops MGS with Threaded Stud

Material: Elastomer: Natural rubber, hardness 55° Shore A.
Metal parts: Steel, zinc plated or stainless steel 1.4301.

STAINLESS

Metal on one side only.

For elastically mounting of power units or bump stops. Also to be used as machine feet for machines that cannot be fixed to the floor or are standing on floors with an easily damaged surface, e.g. office machines.

Temperature resistant up to 80°C.

Other sizes, Shore hardnesses or elastomer types on request.

Ordering Details: z.B.: Product No.. 685 781 00, Bump Stop MGS, 10 mm

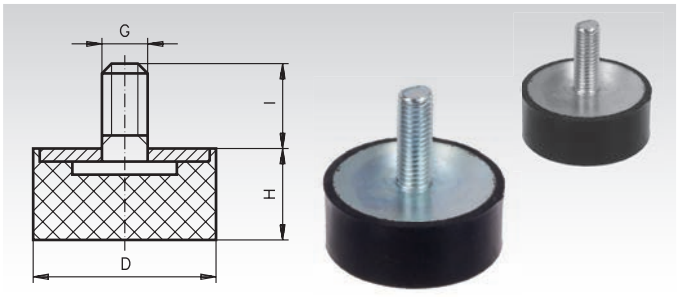

Product No. Zinc plated	Product No. Stainless	Ø D mm	H mm	G mm	l mm	Pressure Load Spring Load CD medium N/mm	Permiss. Load $F_{perm.}$* N	Weight g
685 781 00	**689 781 00**	10	10	M4	10	38	43	2,6
685 783 00	**689 783 00**	10	15	M4	10	13	43	2,9
685 786 00	**689 786 00**	15	7	M4	10	136	95	3,5
685 787 00	**689 787 00**	15	8	M4	10	122	95	3,6
685 788 00	**689 788 00**	15	10	M4	10	106	95	3,8
685 790 00	**689 790 00**	15	15	M4	10	74	95	7,3
685 791 00	**689 791 00**	20	5	M6	18	340	170	8,0
685 801 00	**689 801 00**	20	8	M6	18	330	170	7,9
685 801 11	**689 801 11**	20	11	M6	18	150	170	9,0
685 802 00	**689 802 00**	20	15	M6	18	138	170	10,3
685 802 20	**689 802 20**	20	20	M6	18	100	170	11
685 802 25	**689 802 25**	20	25	M6	18	80	170	14
685 803 08	**689 803 08**	25	8	M6	18	300	280	14
685 803 10	**689 803 10**	25	10	M6	18	270	280	14
685 803 00	**689 803 00**	25	15	M6	18	254	280	17
685 803 20	**689 803 20**	25	20	M6	18	128	280	20
685 803 25	**689 803 25**	25	25	M6	18	100	280	24
685 803 30	**689 803 30**	25	30	M6	18	80	280	30
685 804 15	**689 804 15**	30	15	M8	23	290	400	29
685 804 00	**689 804 00**	30	20	M8	20	200	400	27
685 804 25	**689 804 25**	30	25	M8	20	180	400	35
685 804 30	**689 804 30**	30	30	M8	20	120	400	35
685 804 40	**689 804 40**	30	40	M8	20	90	400	48
685 805 20	**689 805 20**	40	20	M8	23	340	650	52
685 805 00	**689 805 00**	40	30	M8	23	234	650	75
685 805 30	**689 805 30**	40	30	M10	28	240	650	74
685 805 40	**689 805 40**	40	40	M8	23	200	650	80
685 806 00	**689 806 00**	50	20	M10	28	680	1000	85
685 806 30	**689 806 30**	50	30	M10	28	425	1000	100
685 806 40	**689 806 40**	50	40	M10	28	390	1000	132
685 806 45	**689 806 45**	50	45	M10	28	350	1000	140
685 806 50	**689 806 50**	50	50	M10	28	310	1000	152
685 806 60	**689 806 60**	60	40	M10	28	470	1500	179
685 806 65	**689 806 65**	60	40	M12	33	460	1500	190
685 806 70	**689 806 70**	70	25	M10	28	650	1800	198
685 806 75	**689 806 75**	70	45	M10	28	800	1800	292
685 807 00	**689 807 00**	75	25	M12	37	2000	2300	241
685 807 40	**689 807 40**	75	40	M12	37	810	2300	320
685 807 50	**689 807 50**	75	50	M12	37	620	2300	357
685 807 55	**689 807 55**	75	55	M12	37	760	2300	384
685 808 00	**689 808 00**	100	40	M16	41	1578	4200	641
685 808 50	**689 808 50**	100	50	M16	41	900	4200	669
685 808 55	**689 808 55**	100	55	M16	41	860	4200	760
685 808 60	**689 808 60**	100	60	M16	41	800	4200	730
685 808 75	**689 808 75**	100	75	M16	41	540	4200	874

Note for Spring Load and Mounting

For a linear resilience characteristic the Spring Load C means, for any operating point, the constant relation of load F [N] to jounce travel f [mm].

$$C = \frac{F}{f} \quad [N/mm]$$

In the technical data, these constants are stated as CD for pure pressure load and as CS for pure shear load.

* $F_{perm.}$ is the permissible static permanent load, which may be overlaid by a dynamic, alternating load. With shearing load please take care that no tension load in the rubber occurs at all during mounting. To achieve a sufficient fatigue strength provide some compressive prestressing.

The stated permissible loads are only approximate, guideline values for the static load for "medium" rubber hardness.
With particularly high, dynamic, alternating loads or high frequencies, the load figures have to be accordingly reduced.

Rubber-Metal Bumpers MGK, Conical Design

Material: Metal parts: Steel, zinc plated.
Elastomer: Natural rubber hardness 55° Shore A.

* $F_{perm.}$ is the permissible static permanent load, which may be overlaid by a dynamic, alternating load. With shearing load please take care that no tension load in the rubber occurs at all during mounting. To achieve a sufficient fatigue strength provide some compressive pre-stressing.

The stated permissible loads are only approximate, guideline values for the static load for "medium" rubber hardness.
With particularly high, dynamic, alternating loads or high frequencies, the load figures have to be reduced accordingly.

Temperature resistant up to 80°C.

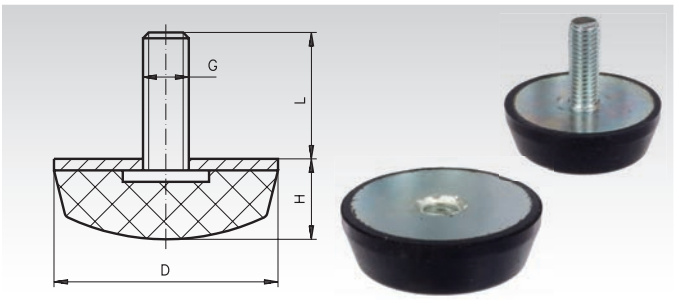

Ordering Details: e.g.: Product No. 685 831 00, Rubber-Metal Bumpers MGK, 25 mm

Product No.	DØ mm	H mm	G x L mm	Spring Rate CD medium N/mm	Load $F_{perm.}$* N	Weight g
685 831 00	25	17	M6 x 18 external thread	119	500	15
685 835 00	50	18	M10 x 28 external thread	670	2000	75
685 841 00	25	17	M6 x 6 internal thread	130	500	15
685 845 00	50	18	M10 x 10 internal thread	735	2000	75

* F_{perm}: Note page 600 bottom.

Rubber-Metal Buffers KP

Material: Metal parts: Steel, zinc plated.
Elastomer: Natural rubber hardness 55° Shore A.

Simple, reasonably priced standard components used for elastic mounting. When shearing load occurs their load-bearing capacity is considerably lower than with pressure load. This has to be considered when horizontal mass forces or belt traction occur. The grade of rubber used has perfect physical properties.

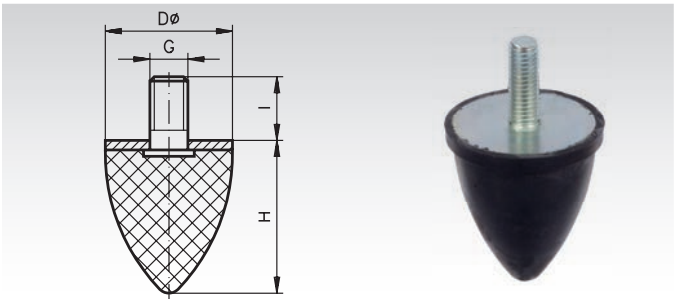

Ordering Details: e.g.: Product No. 685 031 00, Rubber-Metal Buffers KP 20x24

Product No.	D Ø mm	H mm	G mm	I mm	Spring Rate CD medium N/mm	Perm. Pressure Load $F_{perm.}$* N	Weight g
685 031 00	20	24	M6	18	15	60	11
685 035 00	30	36	M8	20	23	140	37
685 041 00	35	40	M8	20	27	150	45
685 045 00	50	58	M10	28	33	320	127
685 051 00	50	67	M8	36	40	400	136
685 055 00	75	89	M12	37	55	900	341
685 061 00	115	136	M16	43	75	1800	1042

* F_{perm}: Note page 600 bottom.

Rubber-Metal Buffers KE

Material: Metal parts: Steel, zinc plated.
Elastomer: Natural rubber Hardness 55° Shore A.

Simple, reasonably priced standard components for elastic mounting. When shearing load occurs their load-bearing capacity is considerably lower than with pressure load. This has to be considered when horizontal mass forces or belt traction occur. The grade of rubber used has perfect physical properties.

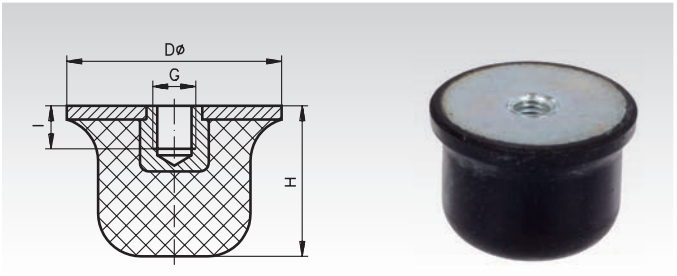

Ordering Details: e.g.: Product No. 685 131 00, Rubber-Metal Buffers KE 50x35

Product No.	D Ø mm	H mm	G mm	I mm	Spring Rate CD medium N/mm	Perm. Pressure Load $F_{perm.}$* N	Weight g
685 131 00	50	35	M10	10	100	400	88
685 135 00	80	60	M12	12	170	1200	308
685 141 00	125	90	M16	16	260	3000	830

* F_{perm}: Note page 544 bottom.

Rubber-Metal Buffers MGP with Threaded Studs

Material: Elastomer: Natural rubber, hardness 55° Shore A.
Metal parts: Steel, zinc plated or stainless steel 1.4301.

STAINLESS

External threads on both sides.

Standard components for elastic mounting.
The grade of rubber used has perfect physical properties.

Temperature resistant up to 80°C.

Other sizes, Shore hardnesses or elastomer types on request.

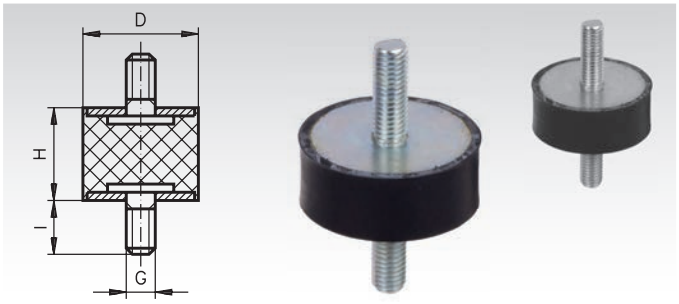

Ordering Details: e.g.: Product No. 685 280 00, Rubber-Metal Buffers MGP, 8 mm

Product No. Zinc plated	Product No. Stainless	Ø D mm	H mm	G mm	l mm	Pressure Load Spring Load CD medium N/mm	Pressure Load Permiss. Load $F_{perm.}$* N	Shearing Load Spring Load CS medium N/mm	Shearing Load Permiss. Load $F_{perm.}$* N	Weight g
685 280 00	**689 280 00**	8	8	M3	6	30	35	9	10	1,0
685 281 00	**689 281 00**	10	10	M4	10	44	43	9	15	3,2
685 283 00	**689 283 00**	10	15	M4	10	29	43	5	15	3,9
685 286 00	**689 286 00**	15	7	M4	10	174	95	29	35	5,8
685 287 00	**689 287 00**	15	8	M4	10	160	95	27	35	6,0
685 288 00	**689 288 00**	15	10	M4	10	124	95	24	35	6,4
685 289 00	**689 289 00**	15	20	M4	13	54	95	10	35	7,0
685 290 00	**689 290 00**	15	15	M4	10	61	95	13	35	7,8
685 301 00	**689 301 00**	20	8	M6	18	307	170	36	60	15
685 302 00	**689 302 00**	20	10	M6	18	150	170	40	60	15
685 304 00	**689 304 00**	20	15	M6	18	130	170	24	60	20
685 304 20	**689 304 20**	20	20	M6	18	100	170	20	60	19
685 304 25	**689 304 25**	20	25	M6	18	70	170	13	60	20
685 305 00	**689 305 00**	25	20	M6	18	85	170	17	60	30
685 307 00	**689 307 00**	25	10	M6	18	750	280	74	95	20
685 307 15	**689 307 15**	25	15	M6	18	140	280	25	95	28
685 307 25	**689 307 25**	25	25	M6	18	600	280	37	95	32
685 307 30	**689 307 30**	25	30	M6	18	71	280	17	95	40
685 308 00	**689 308 00**	30	15	M8	20	525	400	58	140	37
685 309 00	**689 309 00**	30	20	M8	20	204	400	40	140	56
685 309 25	**689 309 25**	30	25	M8	20	180	400	33	140	58
685 311 00	**689 311 00**	30	30	M8	20	108	400	25	140	65
685 311 10	**689 311 10**	30	40	M8	20	85	400	18	140	64
685 311 20	**689 311 20**	40	15	M8	20	380	650	90	250	79
685 311 23	**689 311 23**	40	25	M8	23	270	650	60	250	84
685 311 28	**689 311 28**	40	25	M10	28	270	650	60	250	90
685 312 00	**689 312 00**	40	30	M8	23	213	650	43	250	102
685 312 30	**689 312 30**	40	30	M10	28	213	650	40	250	105
685 313 00	**689 313 00**	40	40	M8	23	140	650	22	250	115
685 315 00	**689 315 00**	50	20	M10	28	857	1000	110	400	141
685 314 00	**689 314 00**	50	25	M10	28	583	1000	84	400	155
685 316 00	**689 316 00**	50	30	M10	28	375	1000	66	400	163
685 317 00	**689 317 00**	50	40	M10	28	260	1000	53	400	178
685 324 00	**689 324 00**	50	45	M10	33	215	1000	43	400	208
685 317 50	**689 317 50**	50	50	M10	28	200	1000	39	400	199
685 317 60	**689 317 60**	60	40	M10	28	390	1500	60	550	231
685 317 70	**689 317 70**	70	45	M10	28	450	1800	70	750	401
685 318 00	**689 318 00**	75	25	M12	37	2710	2300	211	850	369
685 318 40	**689 318 40**	75	40	M12	37	734	2300	117	850	420
685 319 00	**689 319 00**	75	50	M12	37	506	2300	91	850	483
685 320 00	**689 320 00**	75	55	M12	37	417	2300	78	850	514
685 322 00	**689 322 00**	100	30	M16	41	3800	4200	310	1600	831
685 321 00	**689 321 00**	100	40	M16	41	1970	4200	257	1600	956
685 321 50	**689 321 50**	100	50	M16	41	900	4200	160	1600	1033
685 321 55	**689 321 55**	100	55	M16	41	892	4200	145	1600	980
685 323 00	**689 323 00**	100	60	M16	41	809	4200	136	1600	1177
685 325 00	**689 325 00**	100	75	M16	41	750	4200	110	1600	1124

* $F_{perm.}$: Note page 600 bottom.

Loctite thread locking and bonding products page 811.

Rubber-Metal Buffers AT

Material: Metal parts: Steel, zinc plated.
Elastomer: Natural rubber hardness 55° Shore A.

Simple, reasonably priced standard components for elastic mounting. When shearing load occurs their load-bearing capacity is considerably lower than with pressure load. This has to be considered when horizontal mass forces or belt traction occur. The grade of rubber used has perfect physical properties.

Temperature resistant up to 80°C.

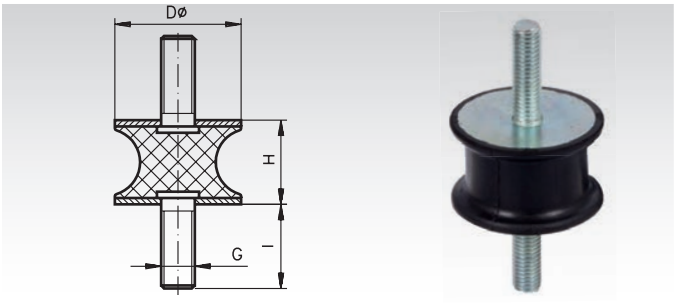

Ordering Details: e.g.: Product No. 685 631 00, Rubber-Metal Buffers AT 20x15

Product No.	D Ø mm	H mm	G mm	I mm	Spring Rate CD medium N/mm	Perm. Pressure Load $F_{perm.}$* N	Weight g
685 631 00	20	15	M6	18	100	300	15
685 635 00	30	20	M8	20	150	700	46
685 641 00	40	48	M8	23	160	900	88
685 645 00	50	30	M10	33	210	1100	140
685 651 00	75	40	M12	37	600	3000	369
685 655 00	100	55	M16	45	850	4100	975

* $F_{perm.}$: Note page 602 bottom.

Rubber-Metal Buffers CT

Material: Metal parts: Steel, zinc plated.
Elastomer: Natural rubber hardness 55° Shore A.

Rubber-Metal buffers are simple, reasonably priced standard components used for elastic mounting. When shearing load occurs their load-bearing capacity is considerably lower than with pressure load. This has to be considered when horizontal mass forces or belt traction occur. The grade of rubber used has perfect physical properties.

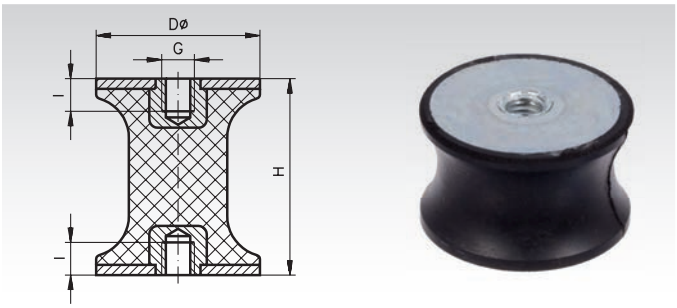

Ordering Details: e.g.: Product No. 685 721 00, Rubber-Metal Buffers CT 10x10

					Pressure Load		Shearing Load		
Product No.	D Ø mm	H mm	G mm	I mm	Spring Rate CD medium N/mm	Perm. Pressure Load F_{perm}* N	Spring Rate CS medium N/mm	Perm. Shearing Load $F_{perm.}$* N	Weight g
685 721 00	10	10	M4	4	30	35	4	20	2
685 723 00	30	20	M8	8	130	650	25	85	25
685 725 00	40	48	M8	8	145	870	80	130	80
685 727 00	50	30	M10	10	200	1000	63	240	63

* $F_{perm.}$: Note page 544 bottom.

Rubber-Metal Buffers MGA with Internal Thread and Threaded Stud

Material: Elastomer: Natural rubber, hardness 55° Shore A.
Metal parts: Steel, zinc plated or stainless steel 1.4301.

STAINLESS

One side with internal thread, other side with external thread.

Standard components for elastic mounting.
The grade of rubber used has perfect physical properties.

Temperature resistant up to 80°C.

Other sizes, Shore hardnesses or elastomer types on request.

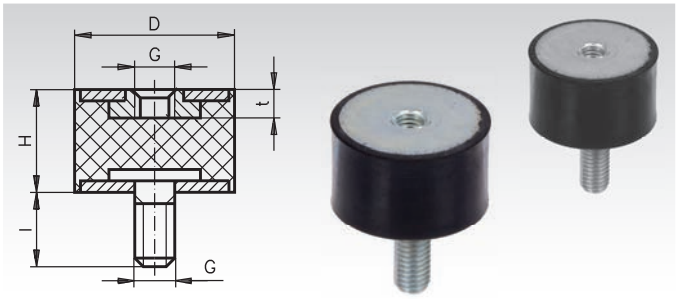

Ordering Details: e.g.: Product No. 685 580 00, Rubber-Metal Buffers MGA, 8 mm

Product No. Zinc plated	Product No. Stainless	Ø D mm	H mm	G mm	l mm	t mm	Pressure Load Spring Load CD medium N/mm	Pressure Load Permiss. Load $F_{perm.}$* N	Shearing Load Spring Load CS medium N/mm	Shearing Load Permiss. Load $F_{perm.}$* N	Weight g
685 580 00	**689 580 00**	8	8	M3	6	3	28	35	10	10	1,0
685 581 00	**689 581 00**	10	10	M4	10	4	48	43	10	15	2,7
685 583 00	**689 583 00**	10	15	M4	10	4	29	43	5	15	3,6
685 590 00	**689 590 00**	15	15	M4	10	4	67	95	15	35	8,3
685 591 15	**689 591 15**	15	15	M5	8	5	65	95	5	35	5,0
685 591 20	**689 591 20**	15	20	M4	10	4	43	95	12	35	6,0
685 591 30	**689 591 30**	15	30	M4	15	4	32	95	9	35	9,0
685 592 15	**689 592 15**	20	15	M6	18	6	110	170	37	60	14
685 592 20	**689 592 20**	20	20	M6	18	6	85	170	17	60	16
685 601 00	**689 601 00**	20	25	M6	18	6	61	170	11	60	17
685 602 15	**689 602 15**	25	15	M6	18	6	165	280	45	95	25
685 602 00	**689 602 00**	25	20	M6	18	6	130	280	30	95	28
685 602 25	**689 602 25**	25	25	M6	18	6	89	280	27	95	29
685 602 30	**689 602 30**	25	30	M6	18	6	71	280	19	95	31
685 607 15	**689 607 15**	30	15	M8	20	8	270	400	68	140	38
685 607 00	**689 607 00**	30	20	M8	20	8	235	400	42	140	41
685 607 25	**689 607 25**	30	25	M8	20	8	180	400	37	140	45
685 603 00	**689 603 00**	30	30	M8	20	8	113	400	28	140	47
685 605 00	**689 605 00**	30	40	M8	20	8	106	400	13	140	60
685 598 00	**689 598 00**	40	25	M8	23	8	265	650	35	250	77
685 608 00	**689 608 00**	40	30	M8	23	8	234	650	49	250	91
685 600 00	**689 600 00**	40	30	M10	28	10	234	650	48	250	92
685 609 00	**689 609 00**	40	40	M8	23	8	147	650	23	250	103
685 610 20	**689 610 20**	50	20	M10	28	10	450	1000	95	400	112
685 610 25	**689 610 25**	50	25	M10	28	10	425	1000	82	400	125
685 610 30	**689 610 30**	50	30	M10	28	10	395	1000	73	400	135
685 610 00	**689 610 00**	50	40	M10	28	10	273	1000	58	400	168
685 611 00	**689 611 00**	50	45	M10	33	10	250	1000	50	400	174
685 613 00	**689 613 00**	50	50	M10	28	10	210	1000	37	400	183
685 613 60	**689 613 60**	60	40	M10	28	10	390	1500	63	550	224
685 613 65	**689 613 65**	60	40	M12	33	12	390	1500	60	550	243
685 613 70	**689 613 70**	70	45	M10	28	10	450	1800	72	700	348
685 613 75	**689 613 75**	75	25	M12	37	12	980	2300	270	850	299
685 614 40	**689 614 40**	75	40	M12	37	12	735	2300	118	850	384
685 614 45	**689 614 45**	75	45	M12	37	12	690	2300	105	850	417
685 614 00	**689 614 00**	75	50	M12	37	12	530	2300	101	850	467
685 614 55	**689 614 55**	75	55	M12	37	12	500	2300	90	850	469
685 615 00	**689 615 00**	100	40	M16	41	16	2160	4200	283	1600	716
685 615 50	**689 615 50**	100	50	M16	41	16	950	4200	220	1600	808
685 615 55	**689 615 55**	100	55	M16	41	16	870	4200	170	1600	841
685 616 00	**689 616 00**	100	60	M16	41	16	843	4200	142	1600	866
685 616 75	**689 616 75**	100	75	M16	41	16	750	4200	110	1600	1026

* $F_{perm.}$: Note page 600 bottom.

Rubber-Metal Buffers MGI

Material: Elastomer: Natural rubber, hardness 55° Shore A.
Metal parts: Steel, zinc plated or stainless steel 1.4301.

STAINLESS

Both sides with internal thread.

Standard components for elastic mounting.
The grade of rubber used has perfect physical properties.

Temperature resistant up to 80°C.

Other sizes, Shore hardnesses or elastomer types on request.

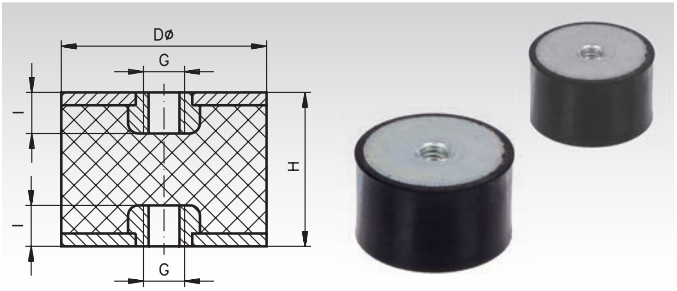

Ordering Details: e.g.: Product No. 685 410 00, Rubber-Metal Buffer 10 mm

Product No. Zinc plated	Product No. Stainless	Ø D mm	H mm	G mm	l mm	Pressure Load Spring Load CD medium N/mm	Pressure Load Permiss. Load $F_{perm.}$* N	Shearing Load Spring Load CS medium N/mm	Shearing Load Permiss. Load $F_{perm.}$* N	Weight g
685 410 00	**689 410 00**	10	10	M4	4	39	43	9	15	2
685 410 15	**689 410 15**	10	15	M4	4	28	43	4	15	2
685 415 00	**689 415 00**	15	15	M4	4	62	95	12	35	5
685 420 00	**689 420 00**	20	25	M6	6	103	170	15	60	17
685 425 00	**689 425 00**	25	20	M6	6	83	170	16	60	24
685 425 30	**689 425 30**	25	30	M6	6	67	280	16	95	30
685 430 00	**689 430 00**	30	20	M8	8	207	400	37	140	35
685 430 30	**689 430 30**	30	30	M8	8	117	400	24	140	44
685 430 40	**689 430 40**	30	40	M8	8	67	400	13	140	50
685 440 00	**689 440 00**	40	30	M8	8	209	650	41	250	78
685 440 40	**689 440 40**	40	40	M8	8	114	650	20	250	93
685 450 00	**689 450 00**	50	30	M10	10	352	1000	68	400	126
685 450 40	**689 450 40**	50	40	M10	10	247	1000	51	400	145
685 450 50	**689 450 50**	50	50	M10	10	118	1000	37	400	169
685 475 00	**689 475 00**	75	40	M12	12	720	2300	110	850	366
685 475 50	**689 475 50**	75	50	M12	12	498	2300	89	850	425
685 500 00	**689 500 00**	100	40	M16	16	1830	4200	249	1600	733
685 500 60	**689 500 60**	100	60	M16	16	770	4200	129	1600	863

* $F_{perm.}$: Note page 600 bottom.

Rubber-Metal Buffers MGE, one side with internal thread

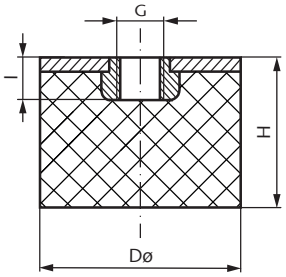



on the internet at www.maedler.de

Heavy-Duty steel rubber Bushes PHO

Material: Metal Parts: Steel, zinc plated.
Elastomer: Natural rubber, hardness 55° Shore A.

Fit: Up to external diameter 30mm: mounting hole H11 / H12.
From external diameter 34mm: mounting hole H13.

Temperature resistant up to 80°C.

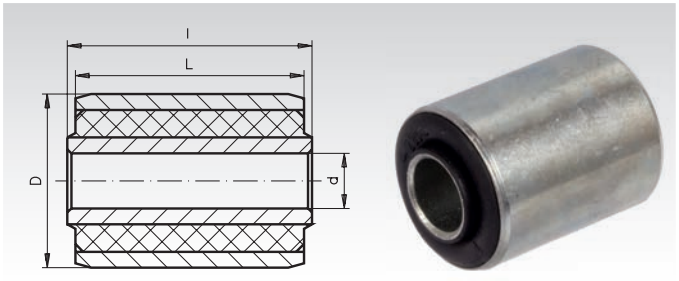

Ordering Details: e.g.: Product No. 685 000 05, Heavy Duty Bush PHO, 16 mm

Product No.	External Ø D mm	Internal Ø d mm	Length of Internal Bush l mm	Length of External Bush L mm	Radial-Load Perm.Stat. Radial Load F_r N	Radial-Load Radial Spring Rate C_r N/mm	Axial-Load Perm.Stat. Axial Load F_a N	Axial-Load Axial Spring Rate C_a N/mm	Perm.St. Torsion Angle φ degrees	Perm.St. Torque M_d Nm	Torsion Torsion Spring Rate Cf Nm/degree	Perm. Max. Torsion Angle $φ_{max.}$ degrees	Perm. Max. Torque Md_{max} Nm	Weight g
685 000 05	$16^{+0,1}$	$8^{+0,15}$	$15^{\pm0,1}$	$17^{\pm0,2}$	300		60							10
685 000 10	$18^{+0,1}$	$10^{+0,15}$	$20^{\pm0,1}$	$18^{\pm0,3}$	400	5000	80	12000	15		0,26	30	7	18
685 000 15	$20^{+0,1}$	$8^{+0,15}$	$17^{\pm0,1}$	$15^{\pm0,2}$	300	4000	60	10000	15		0,26	30	7	16
685 000 20	$22^{+0,1}$	$8^{+0,15}$	$16^{\pm0,1}$	$10^{\pm0,2}$	100	196	140	69	13	0,7	0,05	26	1,4	
685 000 25	$22^{+0,1}$	$10^{+0,15}$	$33^{\pm0,1}$	$30^{\pm0,3}$	2800	14000	410	680	15		0,26	30	7	46
685 000 30	$24^{+0,1}$	$10^{+0,15}$	$17^{\pm0,1}$	$14^{\pm0,2}$	200	491	160	103	15	1,3	0,09	30	2,6	
685 000 35	$24^{+0,1}$	$12^{+0,15}$	$38^{\pm0,1}$	$35^{\pm0,3}$	23320		1330		10		1,93	20		60
685 000 40	$25^{+0,1}$	$10^{+0,15}$	$24^{\pm0,1}$	$20^{\pm0,3}$	4000		410		15		0,80	30		44
685 000 45	$25^{+0,1}$	$12^{+0,15}$	$28^{\pm0,1}$	$25^{\pm0,3}$	4920		500		10		0,95	20		45
685 001 00	$26^{+0,1}$	$12^{+0,15}$	$24^{\pm0,1}$	$18^{\pm0,3}$	690	1962	680	226	13	4,4	0,34	26	9	37
685 001 05	$26^{+0,1}$	$12^{+0,15}$	$36^{\pm0,1}$	$32^{\pm0,3}$	1370	3924	840	422	13	8	0,61	26	15	
685 002 00	$30^{+0,1}$	$13^{+0,15}$	$40^{\pm0,1}$	$40^{\pm0,3}$	1670	3335	-	392	15	9	0,60	30	18	79
685 002 05	$30^{+0,1}$	$14^{+0,15}$	$76^{\pm0,1}$	$67^{\pm0,3}$	3920	8829	2310	765	15	19	1,24	30	37	
685 002 10	$32^{+0,15}$	$16^{+0,2}$	$17^{\pm0,1}$	$16^{\pm0,3}$	1900		310		12,5		1,06	25		38
685 002 15	$32^{+0,15}$	$16^{+0,2}$	$28^{\pm0,1}$	$25^{\pm0,3}$	8660		770							72
685 002 20	$32^{+0,15}$	$16^{+0,2}$	$54^{\pm0,1}$	$50^{\pm0,3}$	15650		1230		7,5		3,6	15		120
685 003 00	$34^{+0,15}$	$18^{+0,3}$	$36^{\pm0,1}$	$32^{\pm0,3}$	1570	3237	830	417	14	12	0,9	28	25	94
685 003 10	$40^{+0,15}$	$16^{+0,3}$	$38^{\pm0,1}$	$32^{\pm0,3}$	1600		320		15		2,1	30		120
685 003 15	$40^{+0,15}$	$26^{+0,3}$	$45^{\pm0,1}$	$40^{\pm0,3}$	4910	14715	2550	1020	7	28	3,9	14	55	
685 003 20	$42^{+0,15}$	$24^{+0,3}$	$96^{\pm0,1}$	$90^{\pm0,3}$	121710		5040		15			30		645
685 004 00	$45^{+0,15}$	$20^{+0,3}$	$62,5^{\pm0,1}$	$55^{\pm0,3}$	3430	3924	1860	540	15	22	1,5	30	44	255
685 005 00	$45^{+0,15}$	$20^{+0,3}$	$62,5^{\pm0,1}$	$59,5^{\pm0,3}$	3920	4905	910	608	15	30	2,0	30	60	258
685 006 00	$50^{+0,15}$	$25^{+0,3}$	$67,5^{\pm0,1}$	$65,5^{\pm0,3}$	6380	6082	760	755	15	60	3,9	30	120	370
685 007 00	$55^{+0,15}$	$25^{+0,3}$	$93,5^{\pm0,1}$	$89,5^{\pm0,3}$	9810	8829	1650	824	15	70	4,6	30	140	677
685 008 00	$55^{+0,15}$	$30^{+0,4}$	$94^{\pm0,1}$	$89,5^{\pm0,3}$	13730	16677	2600	1177	13	100	7,6	26	200	622
685 008 10	$56^{+0,15}$	$32^{+0,4}$	$55^{\pm0,1}$	$50^{\pm0,3}$	14980		1300		12,5		14,5	25		340
685 009 00	$70^{+0,15}$	$50^{+0,4}$	$60^{\pm0,1}$	$60^{\pm0,3}$	11770	10620	-	1511	6,5	140	21,1	13	370	494
685 010 00	$75^{+0,20}$	$40^{+0,4}$	$70^{\pm0,1}$	$57^{\pm0,3}$	5890	4611	4510	697	14	130	9,1	28	260	759
685 011 00	$80^{+0,20}$	$50^{+0,4}$	$100^{\pm0,1}$	$95^{\pm0,3}$	14720	14715	3430	1373	11	260	2320	22	510	1020

General

These Rubber-Metal, heavy-duty bushes feature an especially high permissible load and large permissible deformation. This great performance is achieved because the rubber parts are firmly attached to the metal parts. The bushes withstand radial, axial and torsional load, without the rubber moving in relation to the metal parts. Minimal gimbal offset (tilting) of the axis of the inner tube in relation to the outer tube, or vice versa, is possible. Depending on the strength, hardness, and length of the rubber, the rubber parts are relatively stiff.

Can be used in machine building or car manufacture as elastic joints, which at permanent operation have to withstand a deflection of approx. ±15° and have to absorb higher radial forces. During deflection a recoiling moment occurs, which is proportional to the torsional angle, as the rubber cannot move in relation to the metal. The bushes are completely maintenance free, silent and vibration isolating along with a high fatigue strength. Spring element and joint are combined in one single element.

The grade of rubber used is not oil proof. An operating temperature of max. 80° must not be exceeded, otherwise the service life is shortened. Hardness about 55° Shore A. The bushes are usually fixed to the outer tube by pressfit.The inner tube can, e.g., be fixed by applying pressure on the front face. In this case the bolt running through the bore of the bush presses the counter bearing against the front face of the inner tube.

Profile Dampers TR Radial Damping

Material: Co-Polyester Elastomer.

Maintenance-free, self-contained damping element. The radial deformation provides a very soft deceleration with a progressive energy absorption towards the end of the stroke. The excellent temperature characteristic of the material provides consistent damping performance over a temperature range of -40°C to +90°C.
The low installed weight, the economic price and the long operating life of up to 1 million cycles makes this an attractive alternative to hydraulic end position damping, if the moving mass does not need to stop in an exact datum position and it is not necessary to absorb 100% of the incoming energy. The space-saving, compact shape has been realized in all sizes ranging from Ø29 mm up to Ø83 mm and is installed very simply and quickly with the supplied, specially shaped mounting bolt. The TR Series has been specially developed to provide maximum stroke at a minimum mounting space in the capacity range from 2 Nm up to 115 Nm.
The life cycle is up to 20 times longer than for urethene dampers, up to ten times longer than for rubber and up to five times longer than for steel springs.

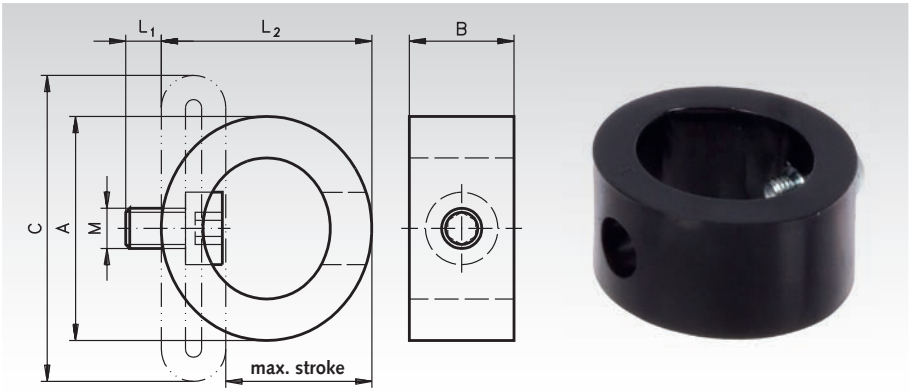

Overload Capacity: For one cycle it is possible to exceed the W_3 rating by 40%.

Environment: Resistant to oil, grease seawater and to microbe or chemical attack. Excellent UV and ozone resistance. Material does not absorb water or swell.

Dynamic Force Range:
300 N to 2100 N.

Temperature Range:
-40°C to +90°C.

Energy Absorption: 17% to 35%.

Material Hardness: Shore 40D

Mounting: in any position

Impact Velocity range: up to max. 5 m/s

Mounting Bolt Torque:
M5: 6 Nm
M6: 10 Nm

On request: special strokes, characteristics, spring rates, sizes and materials.

Ordering Details: e.g.:
Product No. 691 229 00, Damper TR, Ø 28 mm

Product No.	Type	W_3* Nm/Stroke	Max. Stroke mm	A** mm	L_1 mm	M Thread	L_2** mm	B** mm	C** mm	Weight g
691 229 00	29-17	2	17	28	5	M5	25	13,5	38	10
691 237 00	37-22	3	22	36	5	M5	32	19,5	50	15
691 243 00	43-25	4	25	43	5	M5	37	19,5	58	20
691 250 00	50-35	6	35	49	5	M5	44	34	68	25
691 263 00	63-43	15	43	64	5	M5	55	43,5	87	55
691 267 00	67-40	25	40	66,5	5	M5	59	46	88	80
691 276 00	76-46	40	46	76	6	M6	67	46	102	105
691 283 00	83-50	45	50	83	6	M6	73	51	109	150

* Max. energy capacity per cycle for continuous use. For a single cycle it is possible to exceed this rating by +40% ** Approx. dimension.

Characteristics of Product No. 691 250 00

Energy-Stroke Characteristics (static)
E_{tot} 4.3 Nm E_{abs}: 0.9 Nm $E_{abs/tot}$: 22%

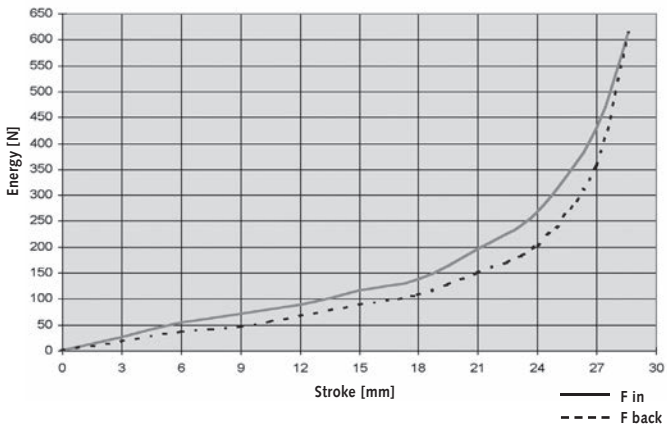

Force-Stroke and Energy Stroke Characteristic (dynamic)
E_{tot}: 6.1 Nm E_{abs}: 2.1 Nm $E_{abs/tot}$: 35%

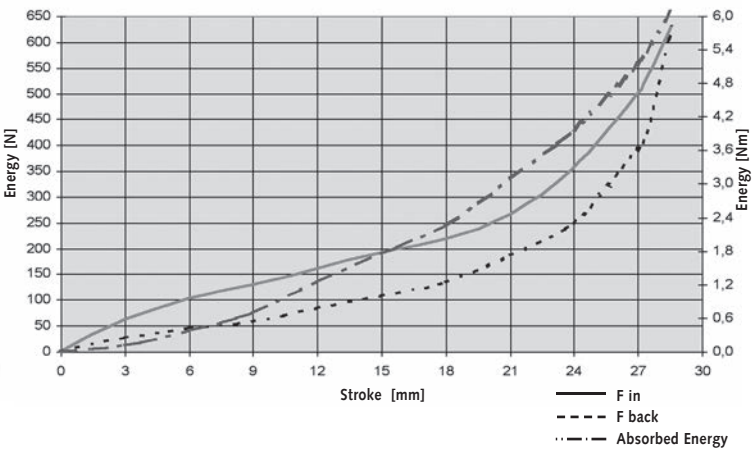

With aid of the characteristics curves above you can determine the amount of energy that will be absorbed.
Example: Energy to be absorbed 3 Nm = stroke needed 21 mm see chart energy-stroke characteristic. The energy stroke chart serves to determine the absorbed or rebound energy at a given stroke length.
Dynamic (v>0.5 m/s) and static (v≤0.5 m/s) characteristics for all types available on request.

Profile Dampers TA Axial Damping

Material: Co-Polyester Elastomer.

Maintenance-free, self-contained damping elements. Due to the degressive damping characteristics it provides a very high energy absorption at the beginning of the stroke. The excellent temperature characteristic of the material provides consistent damping performance over a temperature range of -40°C to +90°C.

The low installed weight, the economic price and the long operating life of up to 1 million cycles makes this an attractive alternative to hydraulic end position damping, if the moving mass does not need to stop in an exact datum position and it is not necessary to absorb 100% of the incoming energy. The space-saving, compact shape has been realized in all sizes ranging from Ø12 mm up to Ø80 mm and is installed very simply and quickly with the supplied, specially shaped mounting bolt. The TA Series has been specially developed to provide maximum stroke at a minimum mounting space in the capacity range from 2 Nm up to 280 Nm.

The life cycle is up to 20 times longer than for urethene dampers, up to ten times longer than for rubber and up to five times longer than for steel springs.

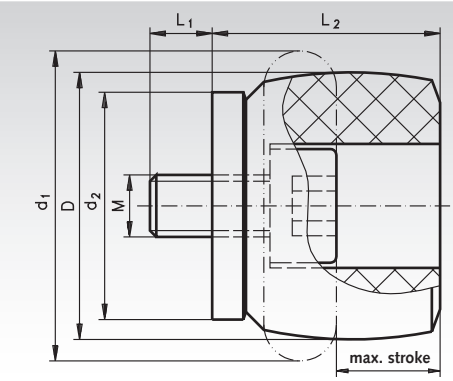



Overload Capacity: For one cycle it is possible to exceed the W_3 rating by 40%.

Environment: Resistant to oil, grease seawater and to microbe or chemical attack. Excellent UV and ozone resistance. Material does not absorb water or swell.

Dynamic Force Range:
980 N to 23500 N.

Temperature Range:
-40°C to +90°C.

Energy Absorption: 40% to 59%.

Material Hardness: Shore 55D

Mounting: in any position

Impact Velocity range: up to max. 5 m/s

Mounting Bolt Torque:

M3:	2 Nm
M4:	4 Nm
M5:	6 Nm
M6:	10 Nm
M8:	25 Nm
M12:	85 Nm
M16:	210 Nm

On request: special strokes, characteristics, spring rates, sizes and materials.

Product No.	Type	W_3* Nm/Stroke	Max. Stroke mm	D** mm	L_1 mm	M Thread	L_2** mm	d_1** mm	d_2** mm	Weight g
691 012 00	12-5	2	5	12	3	M3	10,5	15	11	3
691 017 00	17-7	6	7	17	4	M4	16	22	15	4
691 021 00	21-9	10	9	20	5	M5	18,5	26	18	5
691 022 00	22-10	15	10	20	6	M6	19,5	27	19	5
691 028 00	28-12	30	12	28	6	M6	26	36	25	10
691 034 00	34-14	50	14	34	6	M6	30	43	30	20
691 037 00	37-16	65	16	34	6	M6	33	48	33	25
691 043 00	43-18	100	18	43	8	M8	38	55	38	40
691 047 00	47-20	130	20	45	12	M12	41	60	41	50
691 050 00	50-22	160	22	50	12	M12	45	64	44	60
691 054 00	54-22	190	22	52	12	M12	47	68	47	65
691 057 00	57-24	230	24	57	12	M12	52	73	50	90
691 062 00	62-25	280	25	59	12	M12	54	78	53	105
691 065 00	65-27	350	27	65	12	M12	58	82	57	130
691 080 00	80-32	600	32	80	16	M16	69	100	69	225

* Max. energy capacity per cycle for continuous use. For a single cycle it is possible to exceed this rating by +40% ** Approx. dimensions.

Characteristics of Product No. 691 037 00

Force-Stroke Characteristics (static)

E_{tot}: 25.9 Nm E_{abs}: 12.0 Nm $E_{abs/tot}$: 46%

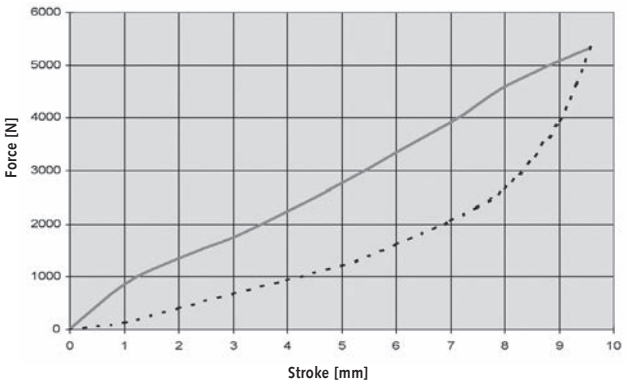

Force-Stroke and Energy-Stroke Characteristics (dynamic)

E_{tot}: 62.6 Nm E_{abs}: 40.3 Nm $E_{abs/tot}$: 64%

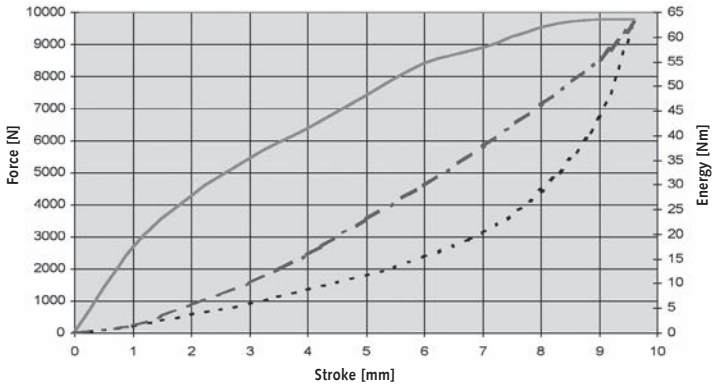

With aid of the characteristics curves above you can determine the amount of the energy that will be absorbed.
Example: Energy to be absorbed 50 Nm = stroke needed 8.8 mm see chart energy-stroke characteristic. The energy stroke chart serves to determine the absorbed or rebound energy at a given stroke length.
Dynamic (v>0.5 m/s) and static (v≤0.5 m/s) characteristics for all types available on request.

Profile Dampers TS, Axial, Soft Damping

Material: Co-Polyester Elastomer.

Maintenance free, self-contained damping elements. Due to the almost linear damping characteristics it provides very smooth energy absorption along with minimum reaction loads on the machine. The excellent temperature characteristic of the material provides consistent damping performance over a temperature range of -40°C to +90°C.

The low installed weight, the economic price and the long operating life of up to 1 million cycles makes this an attractive alternative to hydraulic end position damping, if the moving mass does not need to stop in an exact datum position and it is not necessary to absorb 100% of the incoming energy. The space-saving compact shape has been realised in all size ranges from Ø14 mm up to Ø64 mm and is very simply and quickly installed with the supplied, specially shaped mounting bolt. The TS Series has been specially developed to provide maximum energy absorption for the minimum overall height in the capacity range from 2 Nm to 65 Nm.

The life cycle is up to 20 times longer than the urethane dampers, up to 10 times longer than for rubber and up to 5 times longer than for steel springs.

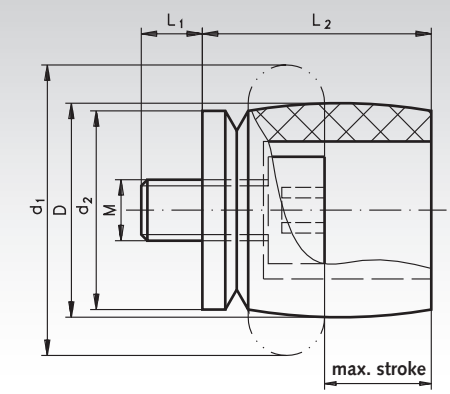



Overload Capacity: For one cycle it is possible to exceed the W3 rating by 40%.

Environment: Resistant to microbes, seawater, chemicals and exhibits excellent UV and ozone resistance.
Material does not absorb water and swell.

Dynamic Force Range:
670 N to 5800 N.

Permissible temperature range:
-40°C to +90°C.

Energy absorption: 26% to 45%.

Material hardness: Shore 40D

Mounting position: optional

Impact velocity range: up to max. 5 m/s

Tightening torque:
M4: 4 Nm
M5: 6 Nm
M6: 10 Nm
M12: 85 Nm
M16: 210 Nm

Special strokes, characteristics, spring rates, sizes and materials on request.

Ordering Details: e.g.: Product No. 691 114 00, Damper TS, Ø 14 mm.

Product No.	Type	W_3* Nm/Stroke	Max. stroke mm	D** mm	L_1 mm	M Thread	L_2** mm	d_1** mm	d_2** mm	Weight g
691 114 00	14-7	2	7	14	4	M4	15	19	13	3
691 118 00	18-9	4	9	17	5	M5	18,5	24	16	4
691 120 00	20-10	6	10	19,5	6	M6	21	27	19	5
691 126 00	26-15	15	15	26	6	M6	28	37	25	10
691 132 00	32-16	25	16	31	6	M6	33	44	30	15
691 135 00	35-19	30	19	33,5	6	M6	36,5	48	33	25
691 140 00	40-19	35	19	36,5	6	M6	37,5	51	34	30
691 141 00	41-21	45	21	39,5	12	M12	41,5	55	38	40
691 144 00	44-23	65	23	42	12	M12	44,5	60	40	45
691 148 00	48-25	80	25	48	12	M12	49	64	44	60
691 151 00	51-27	90	27	51	12	M12	52	69	47	70
691 154 00	54-29	115	29	54	12	M12	55	73	50	80
691 158 00	58-30	135	30	58	12	M12	59	78	53	100
691 161 00	61-32	160	32	61	16	M16	62	83	56	120
691 164 00	64-34	195	34	64	16	M16	66	87	60	145

* Max. energy absorption per stroke for continuous use. For a single cycle it is possible to exceed this rating by +40%. ** Approx. dimensions.

Characteristics for Product No. 691 144 00

Force-Stroke Characteristics (static)

E_{tot}: 32,7 Nm E_{abs}: 10,1 Nm $E_{abs/tot}$: 31%

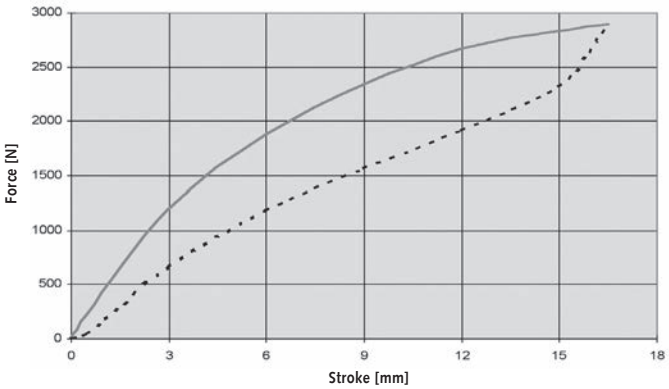

Force-Stroke and Energy-Stroke Characteristics (dynamic)

E_{tot}: 64,1 Nm E_{abs}: 29,2 Nm $E_{abs/tot}$: 45%

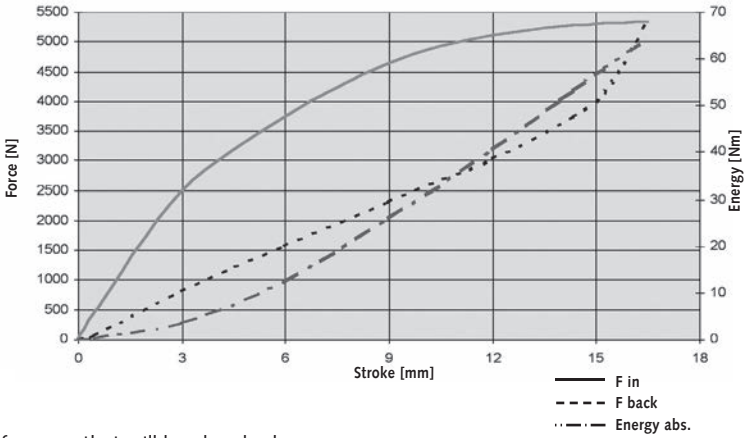

With aid of the characteristic curves, you can determine the amount of energy that will be absorbed.
For example: Energy to be absorbed 50 Nm = stroke needed 14 mm see chart of energy-stroke characteristic. The energy-stroke chart serves to determine the absorbed or rebound energy at a given stroke length.
Dynamic (v>0.5 m/s) and static (v≤0.5 m/s) characteristics for all types available on request.

Miniature Shock Absorbers

Material: Shock absorber and accessories: Stahl burnished. Button: hardened. Piston rod: hardened, stainless steel.

Miniature shock absorbers are maintenance-free, self-contained hydraulic elements. The adjustable miniature shock absorbers can be perfectly set up for the respective application. They include an integrated mechanical stop. Due to the long stroke length, the unit offers smooth deceleration and low reaction forces.

These shock absorbers are ideal for absorbing fast movements in small linear units, handling modules, robotics systems and other applications.

Adjustment: by turning the adjustment screw. After installation, cycle the machine a few times, turning the adjustment screw until optimum deceleration is achieved.

Impact velocity range: 0.3 to 3.6 m/s.

Exceeding W_4 (max. energy absorption per hour) is possible, if the unit is turned off from time to time or the shock absorber is cooled with the cylinder exhaust air.

Mounting position: optional.

Permissible temperature range: 0°C to 66°C.

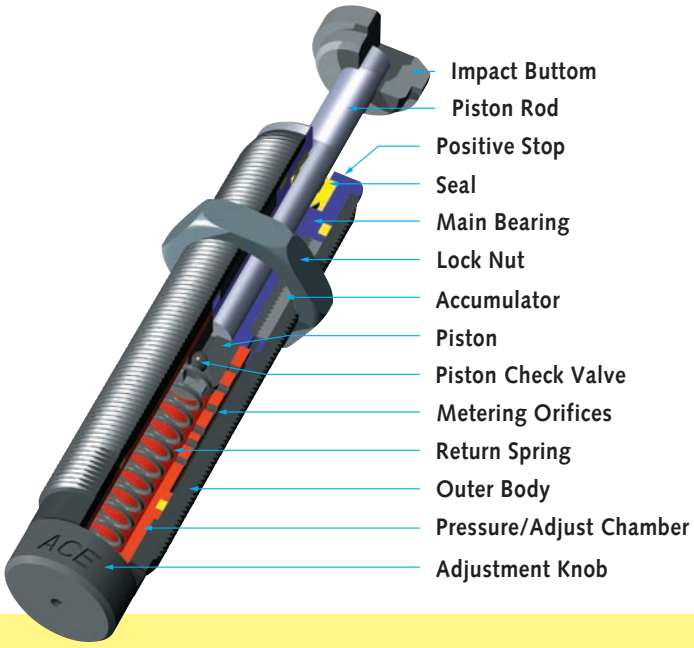

Capacity Chart

Product No.	Max. Energy Capacity per Cycle W_3 Nm	per hour W_4 Nm	Effective Weight me adjustable min. kg	max. kg	Return Force N	Rod Reset Time s	Max. Side Load Angle Degrees
690 030 00	3,5	5650	0,23	15	1 - 5	0,3	2
690 050 00	5,5	5100	4,5	20	3 - 6	0,3	2
690 035 00	4	6000	5,9	57	5 - 11	0,2	2
690 150 00	22	35000	1,0	109	3 - 5	0,4	5*
690 225 00	25	45000	2,3	226	5 - 10	0,1	2*
690 600 00	68	68000	9,0	1360	10 - 30	0,2	2*
690 900 00	100	90000	14	2040	10 - 35	0,4	1

* For higher side load angles consider using the Side Load Adaptor (on request).

Dimensions



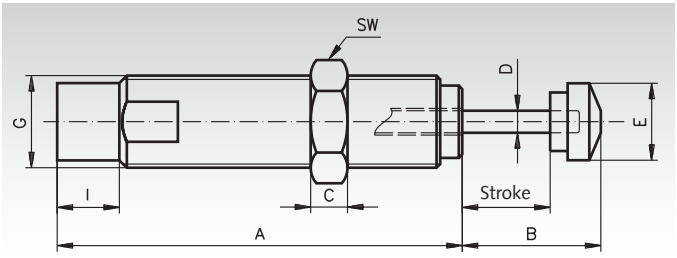

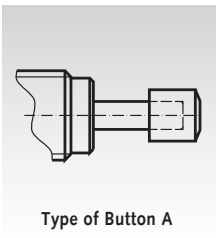
Type of Button A

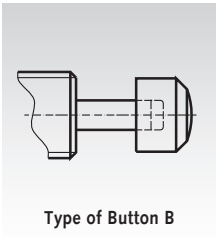
Type of Button B

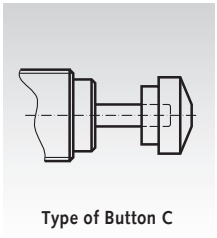
Type of Button C

Ordering Details: e.g.: Product No. 690 030 00, Miniature Shock Absorbers, Stroke 8 mm

Product No. Miniature Shock Absorber	A mm	B mm	C mm	stroke mm	I mm	D Ø mm	E Ø mm	G Thread	Width Across Flats SW mm	Type of Buttom	Weight g	Product No. additional lock nut	Weight Lock nut g
690 030 00	48	13,1	3	8	4,1	3,2	6,4	M8x1	10	A	25	**690 030 04**	0,8
690 050 00	50	14,9	4	7	5,1	3,2	7,7	M10x1	12	A	30	**690 050 04**	1,4
690 035 00	66	18	5	10	5	3,2	7,7	M12x1	14	A	43	**690 035 04**	2,4
690 150 00	70	22,5	6	12,5	7,5	4,8	12	M14x1,5	17	B	60	**690 150 04**	4,8
690 225 00	88	30	8	19	13,5	4,8	17	M20x1,5	23	C	130	**690 225 04**	8
690 600 00	106,6	36,4	10	25,4	16,5	6,3	23	M25x1,5	30	C	310	**690 600 04**	18
690 900 00	138	51	10	40	16,5	6,3	23	M25x1,5	30	C	400	**690 600 04**	18

Mounting Blocks

Material: Steel burnished.

When mounting blocks are used, the shock absorber has to be secured with a lock nut.
2 socket-head screws DIN 912 are included.

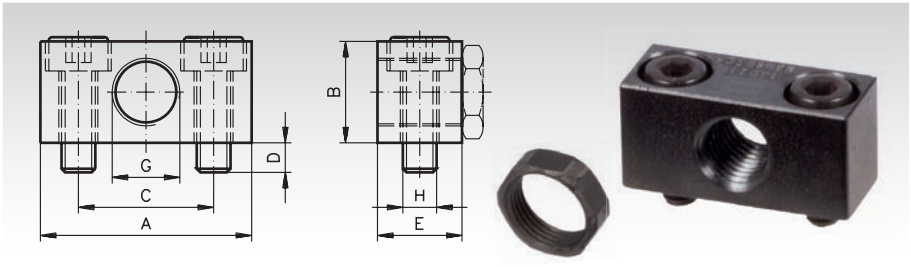

Ordering Details: e.g.:
Product No. 690 030 01, Mounting Block M8x1

Product No. Mounting Block	for Product No. Shock absorbers	A mm	B mm	C mm	D mm	E mm	G Thread	H Thread	Tighten.Torque Nm	Weight g	Product No. Lock Nut	Weight g
690 030 01	690 030 00	25	12	16	3,5	10	M8x1	M4x12	4	15	**690 030 04**	0,8
690 050 01	690 050 00	25	14	16	3,5	10	M10x1	M4x16	4	20	**690 050 04**	1,4

Clamp Mounts

Material: Steel burnished.

When using the clamp mount, no lock nut is required. Fine adjustment can be carried out before the clamping.
2 socket-head screws DIN 912 are included.

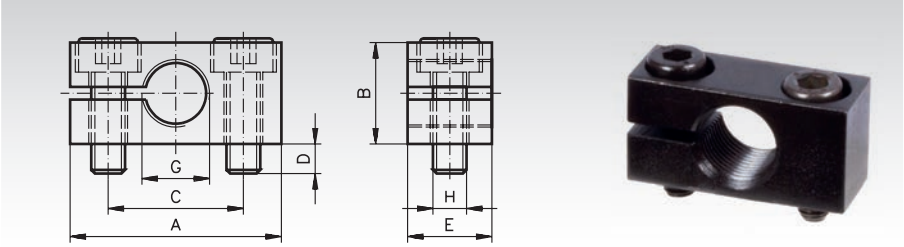

Ordering Details: e.g.:
Product No. 690 035 02, Clamp Mount M12x1

Product No. Clamp Mount	for Product No. Shock absorbers	A mm	B mm	C mm	D mm	E mm	G Thread	H Thread	Tighten. Torque Nm	Weight g
690 035 02	690 035 00	32	16	20	4,5	12	M12x1	M5x16	6	35
690 150 02	690 150 00	32	20	20	4,5	12	M14x1,5	M5x20	6	40
690 225 02	690 225 00	40	25	28	6	20	M20x1,5	M6x25	11	89
690 600 02	690 600 00 / 690 900 00	46	32	34	6	25	M25x1,5	M6x30	11	185

Rectangular Flanges

Material: Steel burnished.

The rectangular flange allows front-end mounting without using an additional lock nut. The low and compact design allows space-saving constructions.
2 socket-head screws DIN 912 are included.

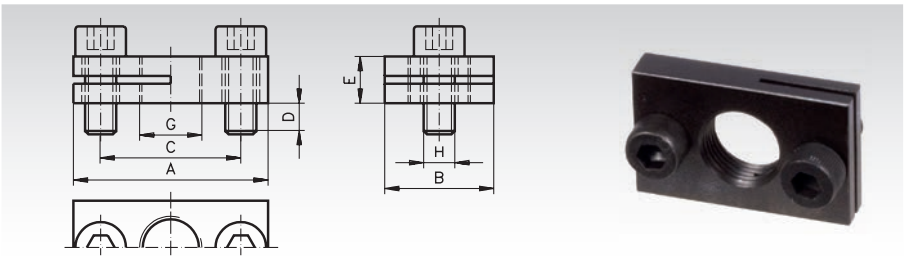

Ordering Details: e.g.:
Product No. 690 030 03, Rectangular Flange M8x1

Product No. Rectangular Flange	for Product No. Shock absorbers	A mm	B mm	C mm	E mm	G Thread	H Thread	Tighten. Torque Nm	Weight g
690 030 03	690 030 00	25	14	18	6	M8x1	M4x10	4	15
690 050 03	690 050 00	28	14	20	6	M10x1	M4x10	4	15
690 035 03	690 035 00	32	20	24	6	M12x1	M5x12	6	25
690 150 03	690 150 00	34	20	26	6	M14x1,5	M5x12	6	25
690 225 03	690 225 00	46	32	36	8	M20x1,5	M6x14	11	89
690 600 03	690 600 00 / 690 900 00	52	32	42	8	M25x1,5	M6x14	11	185

Hinges at MÄDLER®:



on the internet at www.maedler.de

Pneumatic-Elements Overview

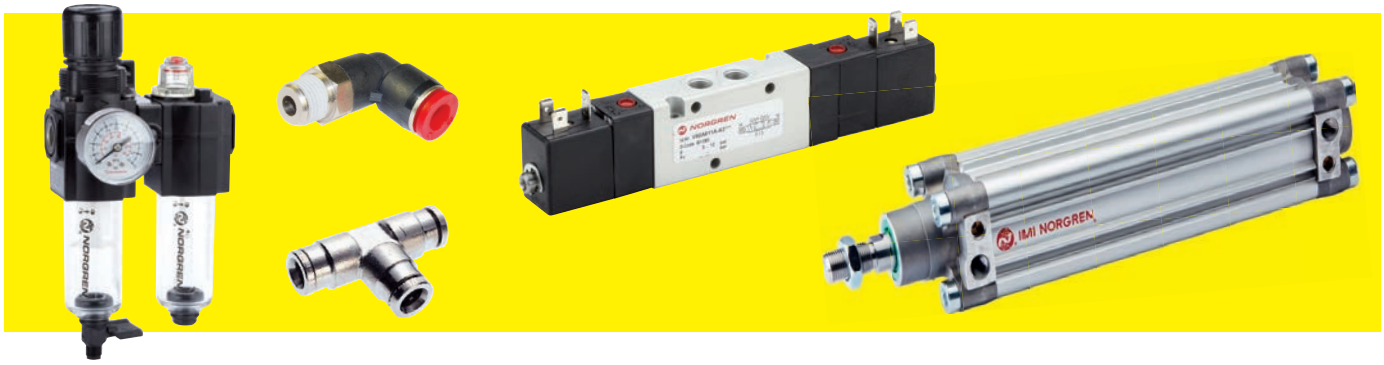

Contents



Standard Cylinder
Diameter 32 - 80 mm.....Page 614



Compact Cylinder
Diameter 20 - 40 mm.....Page 616



Round-Line Cylinder
Diameter 10 - 25 mm.....Page 618



Mounting Elements for
Cylinders.....Page 620



Magnetic Switches for
Cylinders.....Page 627



Solenoid Valves for
Gases and Liquids.....Page 629



Solenoid Valves for Compressed Air
(Pneumatic Valves).....Page 631



Air Preparation Equipment
and Accessories.....Page 634



Push-in and
Compression Fittings.....Page 638



Ball Valves, Manually Operated.....Page 644



Filters, Silencers, Flow Regulators,
Exhaust Valves, Non-Return and
Stop Valves, Tools.....Page 645



Tubing.....Page 648



Blow Guns and Accessories.....Page 649

Double-Acting Standard Cylinder According to ISO 15552 with Magnetic Piston

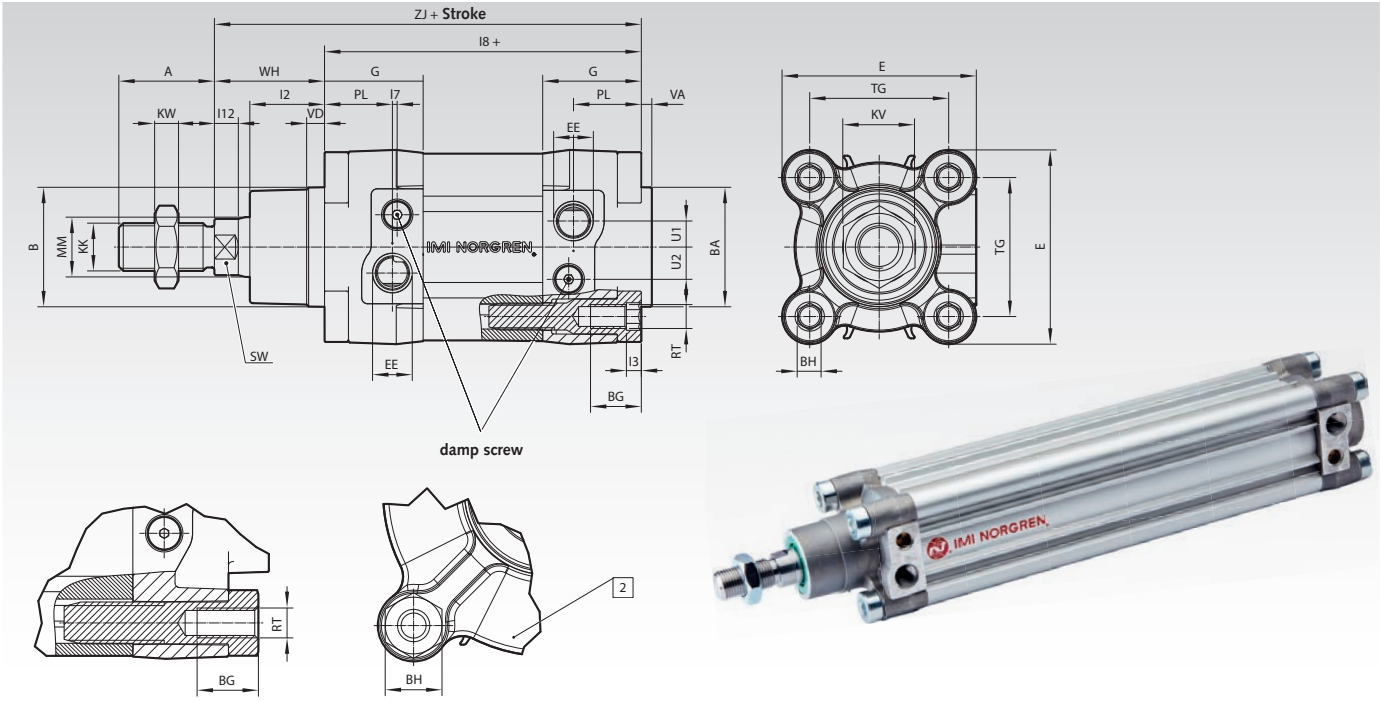

Materials: Profile barrel: Anodised aluminium. End covers: Aluminium die-cast. Piston rod: Stainless steel (ferritic), Piston and piston rod seals: PUR. O-ring seals: NBR.

Medium: Compressed air, filtered, lubricated or non-lubricated.
Standard: ISO 15552.
Mode of operation: Double-acting with magnetic piston and adjustable, adaptive end-of-stroke cushioning system ACS.
Operating pressure:1 to 12 bar.
Operating temperature: -20°C to +80°C.
Below +2°C please consider the air quality.

Cylinder Ø mm	Theoretical Forces (N) at 6 bar Thrust	Pull	Cushion Length mm	Initial Cushion Volume cm^3
32	482	414	20	12,8
40	754	633	22	20,2
50	1178	990	24	36
63	1870	1680	24	64
80	3016	2722	26	111

Ordering details: e.g.: Product No. 801 320 25, Double-Acting Standard Cylinder According to ISO 15552 with Magnetic Piston, Cylinder Ø 32 mm, Stroke 25 mm

Symbol

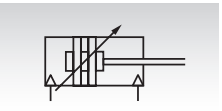

Product No. Standard Strokes 25 mm	50 mm	80 mm	100 mm	125 mm	160 mm	200 mm	250 mm	Cylinder-Ø mm	Connection
801 320 25	**801 320 50**	**801 320 80**	**801 321 00**	**801 321 25**	**801 321 60**	**801 322 00**	**801 322 50**	32	$G^1/_8$
801 400 25	**801 400 50**	**801 400 80**	**801 401 00**	**801 401 25**	**801 401 60**	**801 402 00**	**801 402 50**	40	$G^1/_4$
801 500 25	**801 500 50**	**801 500 80**	**801 501 00**	**801 501 25**	**801 501 60**	**801 502 00**	**801 502 50**	50	$G^1/_4$
801 630 25	**801 630 50**	**801 630 80**	**801 631 00**	**801 631 25**	**801 631 60**	**801 632 00**	**801 632 50**	63	$G^3/_8$
801 800 25	**801 800 50**	**801 800 80**	**801 801 00**	**801 801 25**	**801 801 60**	**801 802 00**	**801 802 50**	80	$G^3/_8$

Cyl. Ø mm	A mm	U_A mm	Ø B^{d11} mm	Ø BA^{d11} mm	BG mm	BH mm	E mm	EE mm	G mm	KK mm	KV mm	KW mm	L_2 mm	L_7 mm
32	22	4,6	30	30	16	6	47	$G^1/_8$	29	M10x1,25	17	5	19,5	6,6
40	24	5,8	35	35	16	6	53	$G^1/_4$	34,5	M12x1,25	19	6	22	5,6
50	32	8,7	40	40	16	8	65	$G^1/_4$	33	M16x1,5	24	8	25	1,6
63	32	10	45	45	16	8	75	$G^3/_8$	36,5	M16x1,5	24	8	25	3,6
80	40	12	45	45	17	19	95	$G^3/_8$	42	M20x1,5	30	10	33	1,8

Cyl. Ø mm	L_8 mm	L_9 mm	L_{12} mm	MM^{h9} mm	PL mm	R mm	RT mm	SW mm	VA mm	VD mm	WH mm	Weight in kg at 0 mm	per 25 mm
32	94	4	5,5	12	15,0	32,5	M6	10	3,5	6	26	0,49	0,06
40	105	4	6,5	16	21,5	38	M6	13	3,5	6	30	0,69	0,08
50	106	5	8	20	22,7	46,5	M8	17	3,5	6	37	1,09	0,12
63	121	5	8	20	24,2	56,5	M8	17	3,5	6	37	1,54	0,13
80	128	-	10	25	29,7	72	M10	22	3,5	6	46	2,64	0,20

Mounting Elements for Standard Cylinders

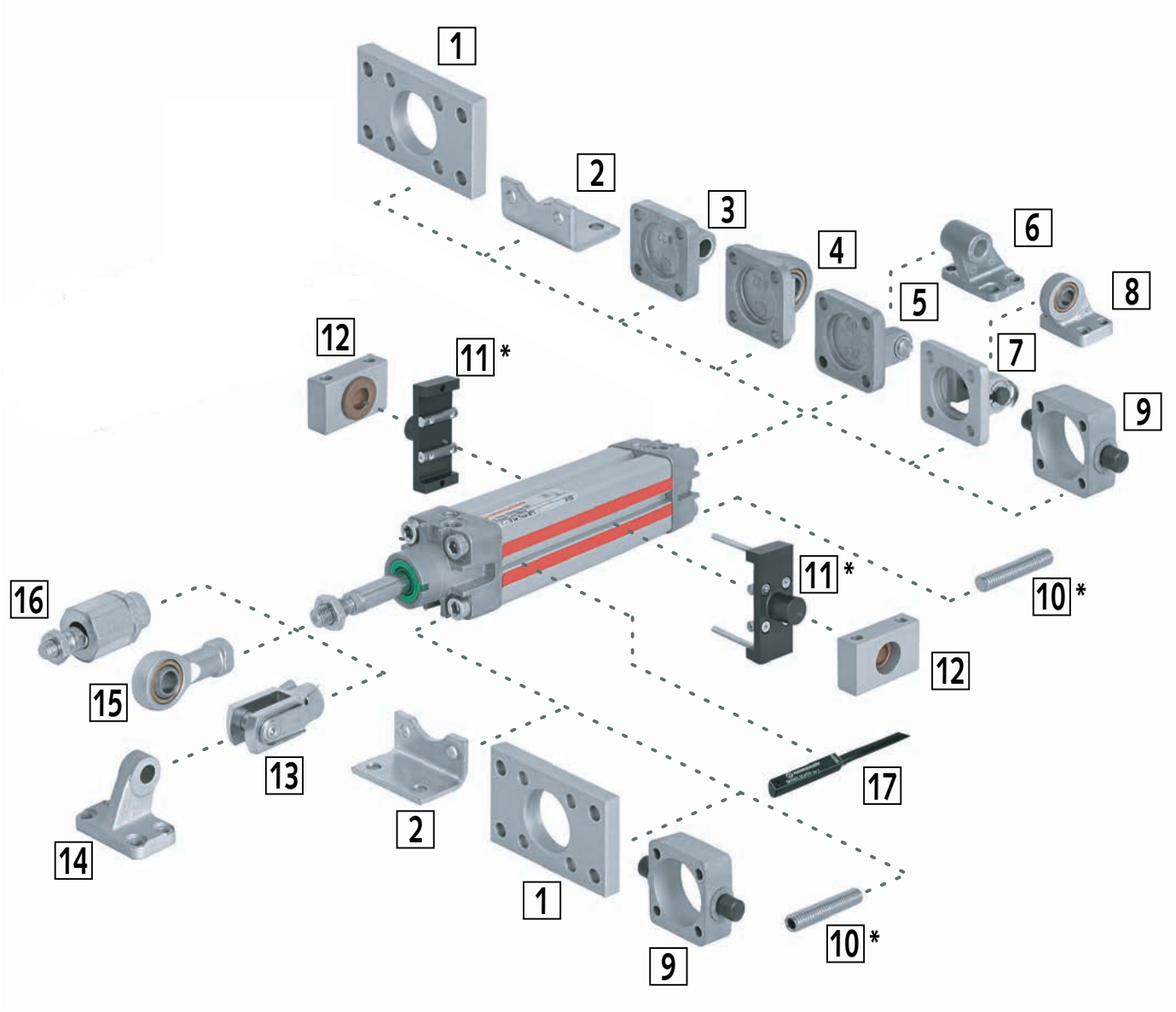

No.	Designation	Cylinder Ø 32mm Product No.	Cylinder Ø 40mm Product No.	Cylinder Ø 50mm Product No.	Cylinder Ø 63mm Product No.	Cylinder Ø 80mm Product No.	Dim. Page*
1	Rear Flange, Front Flange	**810 001 32**	**810 001 40**	**810 001 50**	**810 001 63**	**810 001 80**	620
2	Foot Plate Mounting	**810 002 32**	**810 002 40**	**810 002 50**	**810 002 63**	**810 002 80**	620
3	Rear Eye Mounting	**810 004 32**	**810 004 40**	**810 004 50**	**810 004 63**	**810 004 80**	620
4	Rear Eye Mounting with Spherical Bearing	**810 012 32**	**810 012 40**	**810 012 50**	**810 012 63**	**810 012 80**	621
5	Rear Clevis Mounting Slim	**810 007 32**	**810 007 40**	**810 007 50**	**810 007 63**	**810 007 80**	621
6	Bracket Hinge Mounting, Rigid, Wide for No. 5	**810 010 32**	**810 010 40**	**810 010 50**	**810 010 63**	**810 010 80**	621
7	Rear Clevis Mounting Slim	**810 008 32**	**810 008 40**	**810 008 50**	**810 008 63**	**810 008 80**	622
8	Bracket Hinge Mounting with Spherical Bearing No.7	**810 011 32**	**810 011 40**	**810 011 50**	**810 011 63**	**810 011 80**	622
9	Trunnion Mounting	**810 013 32**	**810 013 40**	**810 013 50**	**810 013 63**	**810 013 80**	622
10	Front or Rear Stud Mounting *	**810 006 32***	**810 006 32***	**810 006 50***	**810 006 50***	**810 006 80***	-
11	Adjustable Trunnion Mounting *	**810 014 32***	**810 014 40***	**810 014 50***	**810 014 63***	**810 014 80***	-
12	Swivel Bearing Sets for No.9 oder No.11	**810 015 32**	**810 015 40**	**810 015 40**	**810 015 63**	**810 015 63**	623
13	Clevis	**810 003 25**	**810 003 40**	**810 003 50**	**810 003 50**	**810 003 80**	623
14	Bracket Hinge Mounting, Rigid, Slim, for No.13	**810 009 32**	**810 009 40**	**810 009 50**	**810 009 63**	**810 009 80**	623
15	Rod End	**810 005 25**	**810 005 40**	**810 005 50**	**810 005 50**	**810 005 80**	623
16	Piston Rod Swivel Mounting	**810 000 25**	**810 000 40**	**810 000 50**	**810 000 50**	**810 000 80**	623

* Discontinued item.

No. 17: Magnetic switches 810 000 01 to 810 000 07 (page 627) can be mounted straight on the keyways of the profile barrel, without further elements.

Double-Acting Compact Cylinder with Magnetic Piston, According to ISO 21287

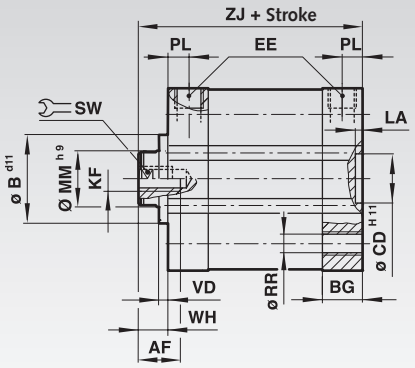

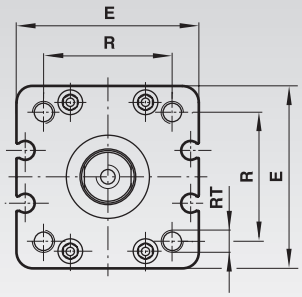



Materials:
Profile barrel: Anodised aluminium.
End covers: Aluminium die-cast.
Piston rod: Stainless steel (Ø 20 and 25 mm austenitic, Ø 32 and 40 mm ferritic).
Piston rod seal: Polyurethane.
Piston seal: Nitrile rubber.
O-ring seals: Nitrile rubber.

Medium: Compressed air, filtered, lubricated or non-lubricated
Standard: ISO 21287.
Mode of operation: double-acting, magnetic piston, piston rod with internal thread, buffer cushioning.
Operating pressure: 1 to 10 bar.
Operating temperature: -5°C* to +80°C.
* With temperatures below +2°C please consider the air quality.

On request also available with external thread.

Cylinder Ø	Theoretical Forces at 6 bar (N)	
mm	Thrust	Pull
20	188	141
25	294	247
32	482	414
40	754	633

Ordering details: e.g.: Product No. 803 200 10, Double-Acting Compact Cylinders with Magnetic Piston, Cylinder Ø 20 mm, Stroke 10 mm

Symbol	Product No. Standard Strokes			Cyl. Ø	Connection
	10 mm	25 mm	50 mm	mm	
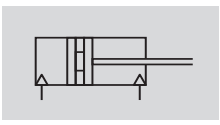	**803 200 10**	**803 200 25**	**803 200 50**	20	M5
	803 250 10	**803 250 25**	**803 250 50**	25	M5
	803 320 10	**803 320 25**	**803 320 50**	32	G1/8
	803 400 10	**803 400 25**	**803 400 50**	40	G1/8

Cyl. Ø	AF	BG	Ø CD^{H11}	E	EE	KF	LA	Ø MM^{h9}
mm	mm	mm	mm	mm			mm	mm
20	10	12	10	37	M 5	M 6	2,5	10
25	10	13	10	41	M 5	M 6	2,5	10
32	12	14,5	14	48	G 1/8	M 8	2,5	12
40	12	14,5	14	54,4	G 1/8	M 8	2,5	16

Cyl. Ø	PL	R	Ø RR	RT	SW	WH	ZJ	Weight in kg	
mm	mm	mm	mm	mm	mm	mm	mm	at 0 mm	per 5 mm
20	7	22	4,3	M 5	8	6	43	0,12	0,01
25	7	26	4,3	M 5	8	6	45	0,15	0,01
32	7,5	32,5	5,3	M 6	10	7	51	0,23	0,02
40	7,5	38	5,3	M 6	13	7	52	0,30	0,02

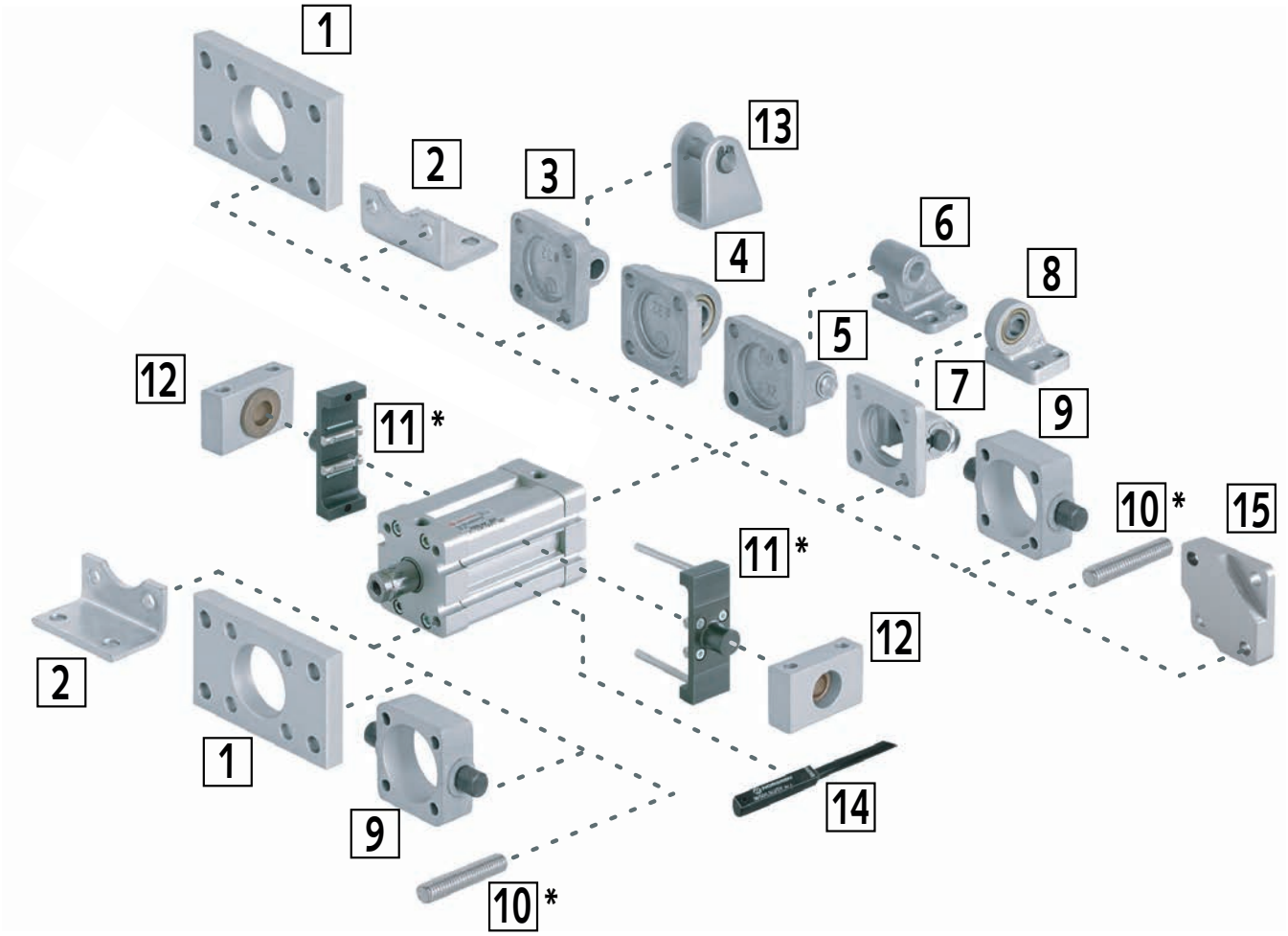

No.	Designation	Cylinder Ø 20mm Product No.	Cylinder Ø 25mm Product No.	Cylinder Ø 32mm Product No.	Cylinder Ø 40mm Product No.	Dim. Page
1	Rear Flange, Front Flange	**810 001 20**	–	**810 001 32**	**810 001 40**	620
2	Foot Plate Mounting	**810 002 20**	**810 002 25**	**810 002 32**	**810 002 40**	620
3	Rear Eye Mounting	**810 004 20**	**810 004 25**	**810 004 32**	**810 004 40**	620
4	Rear Eye Mounting with Spherical Bearing	–	–	**810 012 32**	**810 012 40**	621
5	Rear Clevis Mounting, Wide	–	–	**810 007 32**	**810 007 40**	621
6	Bracket Hinge Mounting, Rigid, Wide for No. 5	–	–	**810 010 32**	**810 010 40**	621
7	Rear Clevis Mounting Slim	–	–	**810 008 32**	**810 008 40**	621
8	Bracket Hinge Mounting with Spherical Bearing No. 7	–	–	**810 011 32**	**810 011 40**	622
9	Trunnion Mounting	–	–	**810 013 32**	**810 013 40**	622
10	Front or Rear Stud Mounting *	–	–	**810 006 32***	**810 006 32***	-
11	Adjustable Trunnion Mounting *	–	–	**810 014 32***	**810 014 40***	-
12	Swivel Bearing Sets for No.9 oder No.11	–	–	**810 015 32**	**810 015 40**	623
13	Bracket Hinge Mounting	**810 023 20**	**810 023 20**	–	–	624

* Discontinued item.

No. 14: Magnetic switches 810 000 01 to 810 000 07 (page 627) can be mounted straight on the keyways of the profile barrel, without further elements.

Double-Acting Round-Line Cylinders According to ISO 6432 with Magnetic Piston (Buffer Cushioning)

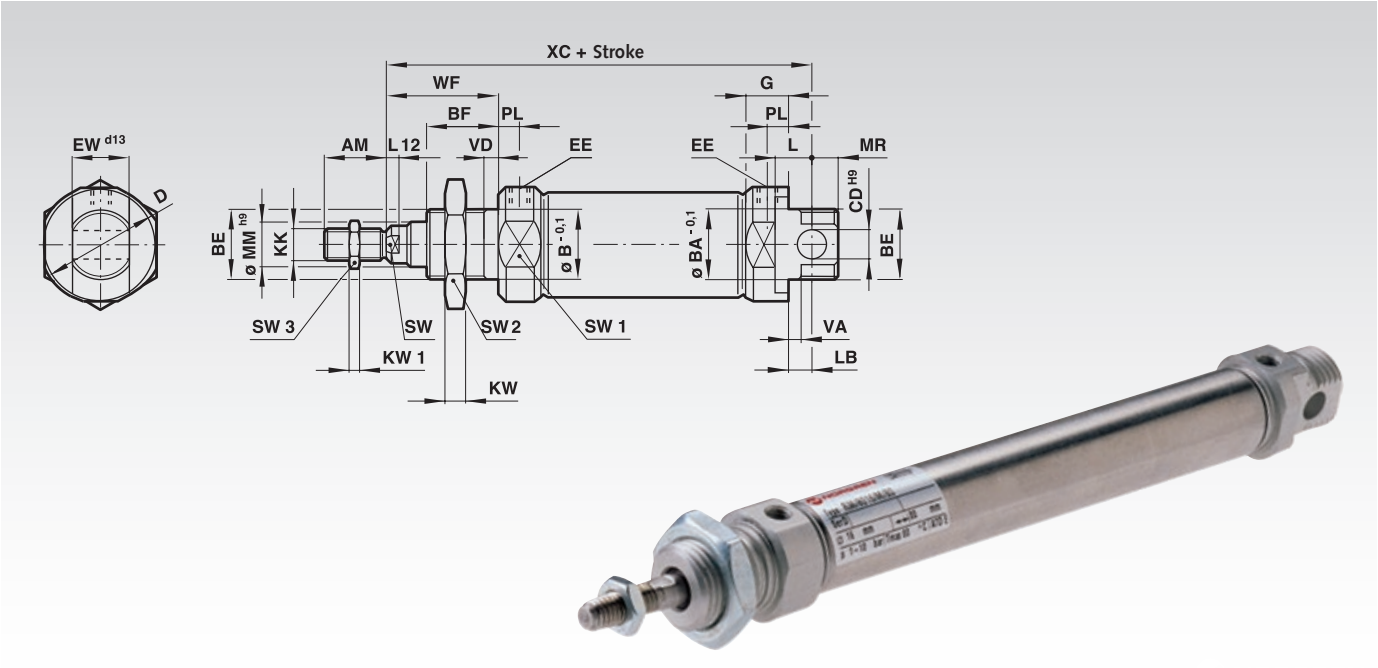

Materials: Profile Barrel: Stainless Steel (austenitic). End Covers: Anodised Aluminium, Piston Rod: Stainless Steel (austenitic), Wiper: Polyurethane, Buffer cushioning: Polyurethane, Seals: Nitrile Rubber.

Medium: Compressed air, filtered, lubricated or non-lubricated.
Standard: ISO 6432.
Mode of Operation: Double-acting with magnetic piston and buffer cushioning.
Operating pressure: 1 to 10 bar.
Operating temperature: max. +80 °C.

Ordering Details: e.g.: Product No. 805 100 10, Double-Acting Round-Line Cylinder according to ISO 6431 with Magnet Piston, Cylinder Ø 10 mm, Stroke 10 mm

Cylinder Ø	Theoretical Forces at 6 bar (N)	
mm	Thrust	Pull
10	47,1	39,6
12	67,8	51
16	120	104
20	188	158
25	294	247

Symbol

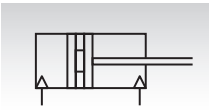

Product No. Standard Strokes								Cylinder	Connection
10 mm	**25 mm**	**50 mm**	**80 mm**	**100 mm**	**125 mm**	**160 mm**	**200 mm**	Ø mm	
805 100 10	**805 100 25**	**-**	**-**	**-**	**-**	**-**	**-**	10	M5
805 120 10	**805 120 25**	**-**	**-**	**-**	**-**	**-**	**-**	12	M5
805 160 10	**805 160 25**	**805 160 50**	**-**	**-**	**-**	**-**	**-**	16	M5
805 200 10	**805 200 25**	**805 200 50**	**805 200 80**	**805 201 00**	**805 201 25**	**805 201 60**	**805 202 00**	20	G1/8
805 250 10	**805 250 25**	**805 250 50**	**805 250 80**	**805 251 00**	**805 251 25**	**805 251 60**	**805 252 00**	25	G1/8

Cyl. Ø	AM	Ø B/BA-0,1	BE	BF	ØCDH9	Ø D	EE	EW-0,1	G	KK	SW2	SW3	KW	KW1
mm	mm	mm		mm	mm	mm		mm	mm		mm	mm	mm	mm
10	12	12	M12x1,25	12	4	16,5	M5	7,9	9	M4	19	7	6	2
12	16	16	M16x1,5	17	6	21	M5	11,9	9,5	M6	22	10	5	3
16	16	16	M16x1,5	17	6	21	M5	11,9	9,5	M6	22	10	5	3
20	20	22	M22x1,5	20	8	30	G1/8	15,9	15	M8	27	13	8	4
25	22	22	M22x1,5	22	8	30	G1/8	15,9	15	M10x1,25	27	17	8	5

Cyl. Ø	L	L12	LB	ØMMh9	MR	PL	SW	SW1	WF	VA/VD	XC	Weight in kg	
mm	mm	mm	mm	mm	mm	mm	mm	mm	mm	mm	mm	at 0 mm	per 25 mm
10	6	-	2	4	8	5,5	-	14	16	1,5	64	0,034	0,007
12	9	3	3	6	8	5,5	5	19	22	2	75	0,058	0,011
16	9	3	4	6	7	5,5	5	19	22	2	82	0,070	0,012
20	12	3	3	8	11	8	7	27	24	2	95	0,145	0,018
25	12	4	7	10	9	8	9	27	28	2	104	0,200	0,028

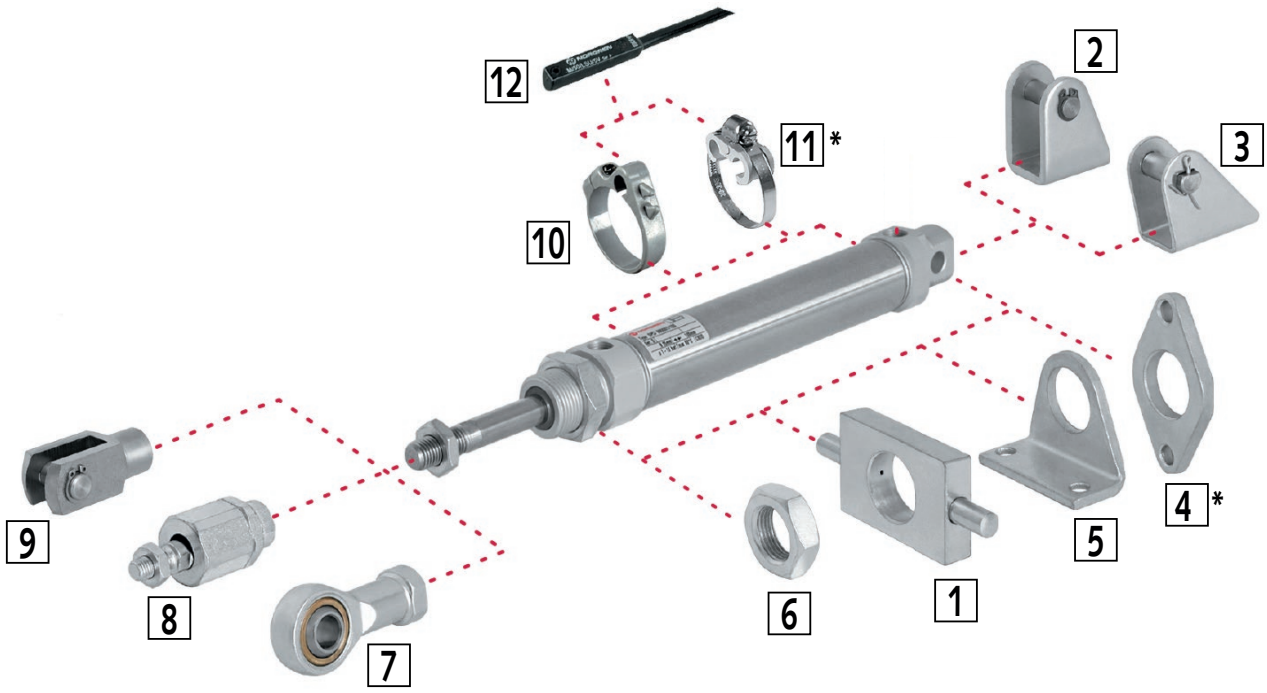

No.	Designation	Cylinder Ø 10mm Product No.	Cylinder Ø 12mm Product No.	Cylinder Ø 16mm Product No.	Cylinder Ø 20mm Product No.	Cylinder Ø 25mm Product No	Dim. Page*
1	Trunnion Mounting	–	810 021 12	810 021 12	810 021 20	810 021 20	624
2	Bracket Hinge Mounting with Circlip	810 023 10	810 023 12	810 023 12	810 023 20	810 023 20	626
3	Bracket Hinge Mounting with Split Pin	810 022 10	810 022 12	810 022 12	810 022 20	810 022 20	626
4	Rear Flange, front Flange*	810 019 10*	810 019 12*	810 019 12*	810 019 20*	810 019 20*	-
5	Foot Plate Mounting	810 020 10	810 020 12	810 020 12	810 020 20	810 020 20	625
6	Piston Rod Lock Nut	810 024 10	810 024 12	810 024 12	810 024 20	810 024 20	625
7	Universal Piston Rod Mounting with Spherical Bearing	810 005 10	810 005 12	810 005 12	810 005 20	810 005 25	624
8	Piston Rod Swivel Mounting	810 000 10	810 000 12	810 000 12	810 000 20	810 000 25	624
9	Clevis	810 003 10	810 003 12	810 003 12	810 003 20	810 003 25	623
10	Mounting Bracket for Magnetic Switches ≥ 15mm Stroke	810 017 10	810 017 12	810 017 16	810 017 20	810 017 25	625
11	Mounting Bracket for Magnetic Switches < 15mm Stroke*	810 018 10*	810 018 12*	810 018 16*	810 018 20*	810 018 25*	-

* Discontinued item.

No. 12: The magnetic switch (product no. 810 000 01 to 810 000 07, page 627) requires the mounting bracket no. 10.

Rear Flanges, Front Flanges

Materials:
Flange: Anodised Aluminium.
Screws: Steel, zinc-plated.

Mounting element at the bearing or end cover.

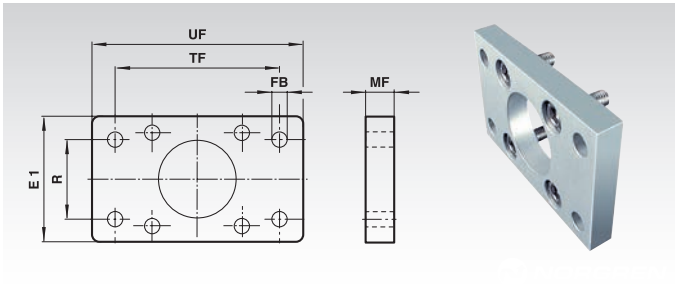

Ordering Details: e.g.: Product-No. 810 001 20, Rear and Front Flange for Cylinder Ø 20 mm

Product No.	Cyl. Ø mm	E1 mm	Ø FB mm	MF mm	R mm	TF mm	UF mm	Weight g
810 001 20	20	36	6,6	8	0*	55	70	160
810 001 32	32	50	7	10	32	64	80	250
810 001 40	40	55	9	10	36	72	90	350
810 001 50	50	65	9	12	45	90	110	700
810 001 63	63	75	9	12	50	100	125	800
810 001 80	80	100	12	16	63	126	154	1350

* 2 bores on the centre line at a distance TF.

Foot Plate Mountings

Materials:
Mounting: Steel, zinc-plated.
Screws: Steel, zinc-plated.

Mounting element at the bearing and end cover.

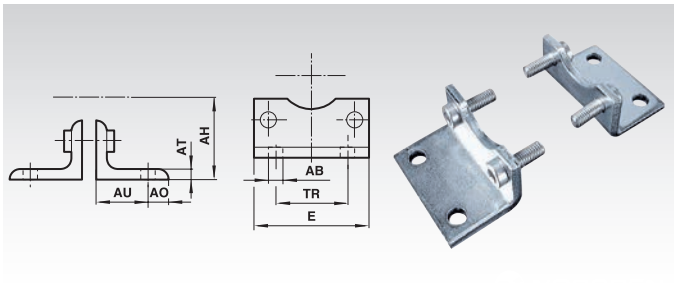

Ordering Details: e.g.: Product-No. 810 002 20, Foot Plate Mounting for Cylinder Ø 20 mm

Product No.	Cyl. Ø mm	Ø AB mm	AH mm	AO mm	AT mm	AU mm	E mm	TR mm	Weight g
810 002 20	20	7	27	6	4	16	36	22	30
810 002 25	25	7	29	7	4	16	40	26	40
810 002 32	32	7	32	8	4	24	48	32	150
810 002 40	40	9	36	9	4	28	53	36	180
810 002 50	50	9	45	10	5	32	64	45	300
810 002 63	63	9	50	12	5	32	74	50	390
810 002 80	80	12	63	19	5	41	98	63	800

Rear Eye Mountings

Materials:
Mounting: Aluminium, die-cast.
Screws: Steel, zinc-plated.

Mounting element at the end cover.

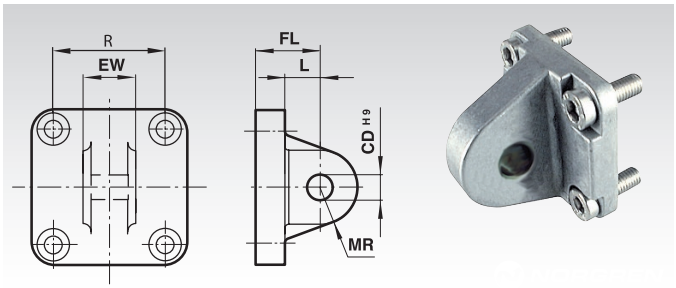

Ordering Details: e.g.: Product-No. 810 004 20, Rear Eye Mounting for Cylinder Ø 20 mm

Product No.	Cyl. Ø mm	Ø CD^{H9} mm	EW mm	FL mm	L mm	MR mm	R mm	Weight g
810 004 20	20	8	15,8	20	14	8	22	20
810 004 25	25	8	15,8	20	14	8	26	30
810 004 32	32	10	25,8	22	13	9	32,5	90
810 004 40	40	12	27,8	25	16	12	38	110
810 004 50	50	12	31,7	27	17	12	46,5	170
810 004 63	63	16	39,7	32	22	15	56,5	240
810 004 80	80	16	49,7	36	22	15	72	370

Rear Eye Mountings with Spherical Bearing

Materials:
Mounting: Aluminium, die-cast.
Screws: Steel, zinc-plated
Inner ring: Roller bearing steel, hardened
Outer ring: Steel.

Mounting element at the end cover.

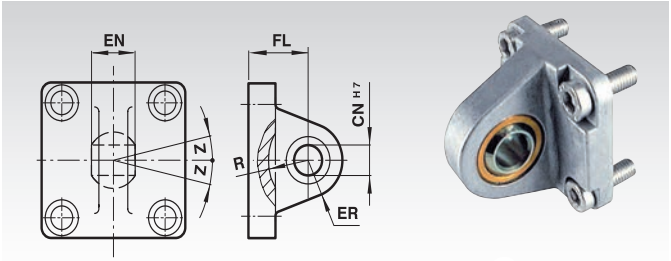

Ordering Details: e.g.: Product No. 810 012 32, Rear Eye Mounting with Spherical Bearing for Cylinder Ø 32 mm

Product No.	Cyl. Ø mm	CN^{H7} mm	EN mm	ER mm	FL mm	R mm	Z Degrees	Weight g
810 012 32	32	10	14	16	22	14,5	13°	170
810 012 40	40	12	16	19	25	18	13°	250
810 012 50	50	16	21	21	27	19	13°	400
810 012 63	63	16	21	24	32	24	15°	550
810 012 80	80	20	25	28	36	24	15°	900

Rear Clevis Mountings, Wide Clevis

Materials:
Mounting: Aluminium, die-cast.
Screws: Steel, zinc-plated
Bolts: Stainless Steel.

Mounting element at the end cover.

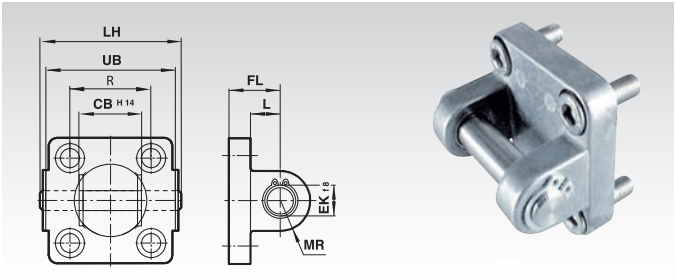

Ordering Details: e.g.: Product No. 810 007 32, Rear Clevis Mounting Made from Aluminium for Cylinder Ø 32 mm

Product No.	Cyl. Ø mm	CB^{H14} mm	EK^{f8} mm	FL mm	L mm	LH mm	MR mm	UB mm	R mm	Weight g
810 007 32	32	26	10	22	13	52	9	32,5	45	110
810 007 40	40	28	12	25	16	60	12	38	52	160
810 007 50	50	32	12	27	17	68	12	46,5	60	220
810 007 63	63	40	16	32	22	79	15	56,5	70	340
810 007 80	80	50	16	36	22	99	15	72	90	540

Bracket Hinge Mountings, Rigid, Wide Design (Aluminium), Mating Piece for Clevis Mounting

Material:
Aluminium, die-cast.

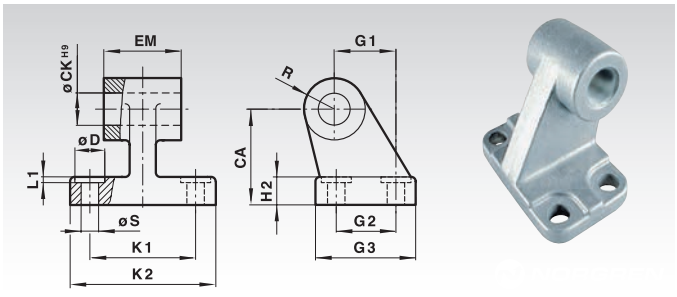

Ordering Details: e.g.: Product No. 810 010 32, Bracket Hinge Mounting, Rigid, Wide Design, for Cylinder Ø 32 mm

Product No.	Cyl. Ø mm	CA mm	CK^{H7} mm	Ø D mm	EM mm	G1 mm	G2 mm	G3 mm	H2 mm	K1 mm	K2 mm	L1 mm	R mm	Ø S mm	Z Degrees	Weight g
810 010 32	32	32	10	11	26	21	18	31	8	38	51	1,6	10	6,6	13°	150
810 010 40	40	36	12	11	28	24	22	35	10	41	54	1,6	11	6,6	13°	200
810 010 50	50	45	12	15	32	33	30	45	12	50	65	1,6	13	9	13°	480
810 010 63	63	50	16	15	40	37	35	50	12	52	67	1,6	15	9	15°	500
810 010 80	80	63	16	18	50	47	40	60	14	66	86	2,5	15	11	15°	750

Rear Clevis Mountings, Slim Clevis

Materials:
Mounting: Aluminium.
Screws: Steel, zinc-plated.
Bolts: Stainless Steel.

Mounting element at the end cover.

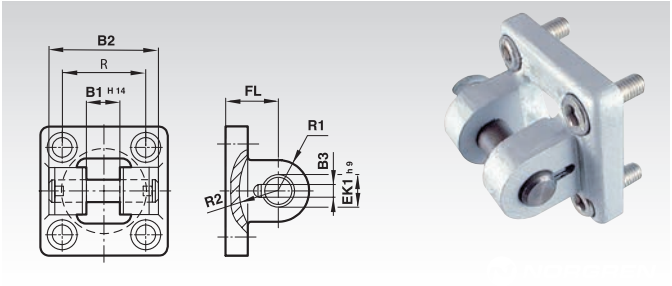

Ordering Details: e.g.: Product No. 810 008 32, Rear Clevis Mounting for Cylinder Ø 32 mm

Product No.	Cyl. Ø mm	B1^{H14} mm	B2 mm	B3 mm	EK1^{h9} mm	FL mm	R mm	R1 mm	R2 mm	Weight g
810 008 32	32	14	34	3,3	10	22	32,5	11	17	200
810 008 40	40	16	40	4,3	12	25	38	12	20	230
810 008 50	50	21	45	4,3	16	27	46,5	14,5	22	360
810 008 63	63	21	51	4,3	16	32	56,5	18	25	550
810 008 80	80	25	65	4,3	20	36	72	22	30	900

Bracket Hinge Mountings with Spherical Bearing (Steel) for Slim Clevis

Materials:
Bracket hinge: Grey cast iron, coated.
Inner ring: Roller bearing steel, hardened.
Outer ring: Steel.

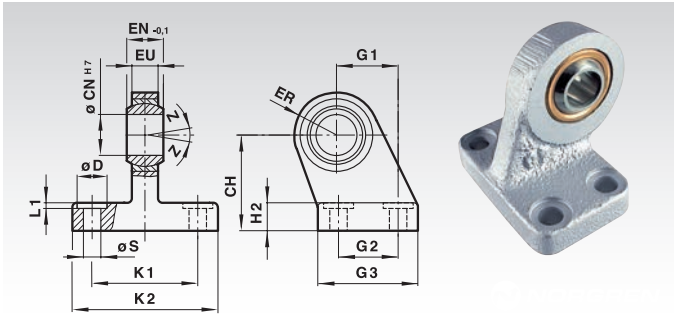

Ordering Details: e.g.: Product No. 810 011 32, Bracket Hinge Mounting, with Spherical Bearing, for Cylinder Ø 32 mm

Product No.	Cyl. Ø mm	CH mm	CN^{H7} mm	Ø D mm	EN$^{-0.1}$ mm	ER mm	EU mm	G1 mm	G2 mm	G3 mm	H2 mm	K1 mm	K2 mm	L1 mm	Ø S mm	Z Degrees	Weight g
810 011 32	32	32	10	11	14	16	10,5	21	18	31	8	38	51	1,6	6,6	13°	190
810 011 40	40	36	12	11	16	18	12	24	22	35	10	41	54	1,6	6,6	13°	240
810 011 50	50	45	16	15	21	21	15	33	30	45	12	50	65	1,6	9	13°	460
810 011 63	63	50	16	15	21	23	15	37	35	50	12	52	67	1,6	9	15°	590
810 011 80	80	63	20	18	25	28	18	47	40	60	14	66	86	2,5	11	15°	1030

Trunnion Mountings (front or rear)

Materials:
Mounting: Grey cast iron.
Screws: Steel, zinc-plated.

Mounting element at the bearing or end cover.

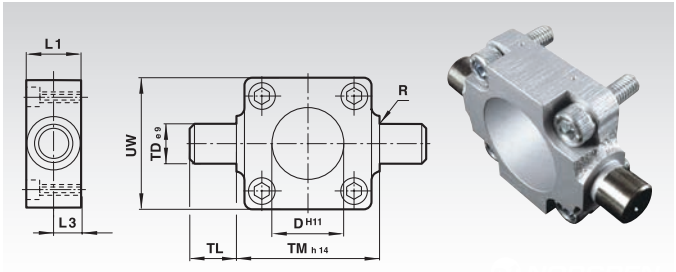

Ordering Details: e.g.: Product No. 810 013 32, Trunnion Mounting for Cylinder Ø 32 mm

Product No.	Cyl. Ø mm	ØD^{H11} mm	L1 mm	L3 mm	R mm	ØTD^{e9} mm	TL mm	TM^{h14} mm	UW1 mm	Weight g
810 013 32	32	30	16	8	1,0	12	12	50	50	200
810 013 40	40	35	20	10	1,6	16	16	63	55	380
810 013 50	50	40	24	12	1,6	16	16	75	65	600
810 013 63	63	45	24	12	1,6	20	20	90	75	1100
810 013 80	80	45	28	14	1,6	20	20	110	100	1900

Swivel Bearing Sets

Materials:
Mounting: Steel.
Bearing: Sintered bronze.

Mounting Element for Trunnion Mounting.
2 bearings included in the delivery.

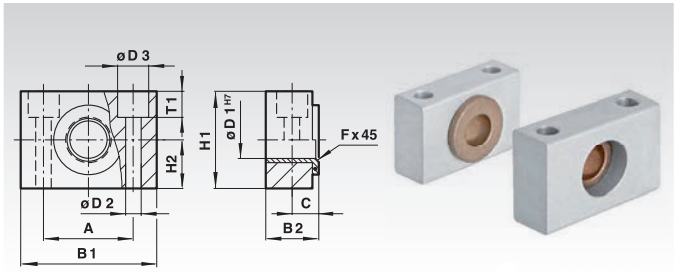

Ordering Details: e.g.: Product No. 810,015 32, Swivel Bearing Set for Trunnion Mounting for Cylinder Ø 32 mm

Product No.	Cyl. Ø mm	A mm	B1 mm	B2 mm	C mm	Ø D1 mm	Ø D2 mm	Ø D3 mm	fx45° mm	H1 mm	H2 mm	T1 mm	Weight g
810 015 32	32	32	46	18	10,5	12	6,6	11	1,0	30	15	6,8	110
810 015 40	40/50	36	55	21	12	16	9	15	1,6	36	18	9	160
810 015 63	63/80	42	65	23	13	20	11	18	1,6	40	20	11	230

Clevises

Materials::
Mounting: Steel, zinc-plated.
Bolts: Steel, zinc-plated.

Mounting element at the piston rod.

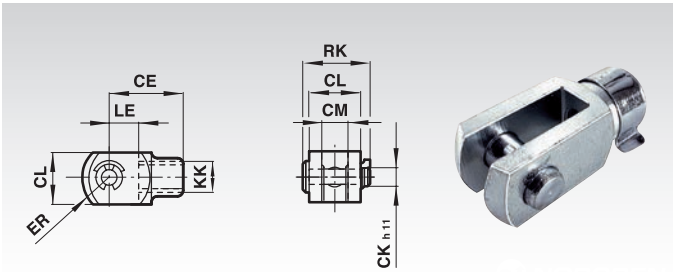

Ordering Details: e.g.: Product-No. 810 003 10, Clevis for Cylinder Ø 10 mm

Product No.	Cyl. Ø mm	Thread KK	CE mm	CK^{h11} mm	CL mm	CM mm	ER mm	LE mm	RK mm	Weight g
810 003 10	10	M4	16	4	8	4	6,5	8	11,5	10
810 003 12	12/16	M6	24	6	12	6	9,5	12	17,5	20
810 003 20	20	M8	32	8	16	8	13	16	22	60
810 003 25	25/32	M10x1,25	40	10	20	10	16	20	28	100
810 003 40	40	M12x1,25	48	12	24	12	19	24	32	30
810 003 50	50/63	M16x1,5	64	16	32	16	25	32	41,5	330
810 003 80	80	M20x1,5	80	20	40	20	32	40	50	670

Bracket Hinge Mounting, Rigid, Slim (Cast), Mating Piece for Clevis Mounting

Material:
Grey cast iron, coated.

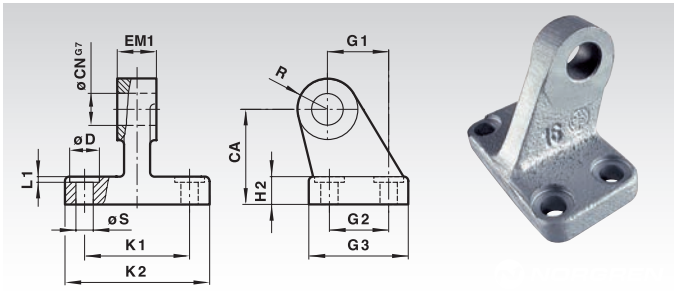

Ordering Details: e.g.: Product No. 810 009 32, Bracket Hinge Mounting, Rigid, Slim Design, for Cylinder Ø 32 mm

Product No.	Cyl. Ø mm	CA mm	CN^{G7} mm	Ø D mm	EM1 mm	G1 mm	G2 mm	G3 mm	H2 mm	K1 mm	K2 mm	L1 mm	R mm	Ø S mm	Z Degrees	Weight g
810 009 32	32	32	10	11	10	21	18	31	8	38	51	1,6	10	6,6	13°	50
810 009 40	40	36	12	11	12	24	22	35	10	41	54	1,6	11	6,6	13°	70
810 009 50	50	45	16	15	16	33	30	45	12	50	65	1,6	13	9	13°	140
810 009 63	63	50	16	15	16	37	35	50	12	52	67	1,6	15	9	15°	180
810 009 80	80	63	20	18	20	47	40	60	14	66	86	2,5	15	11	15°	280

Universal Piston Rod Mountings with Spherical Bearing

Materials:
Mounting: Steel, zinc-plated.
Inner ring: Roller bearing steel, hardened.
Outer ring: Brass.

Mounting element at the piston rod.

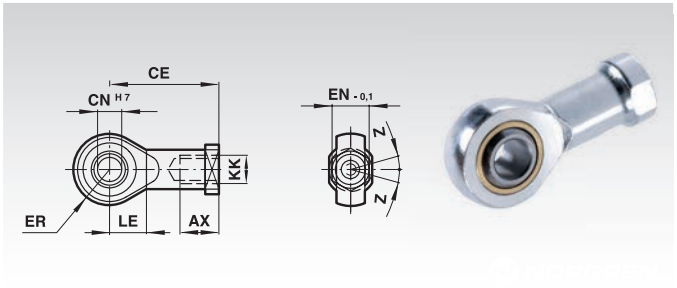

Ordering Details: e.g.: Product-No. 810 005 10, Universal Piston Rod Mounting for Cylinder Ø 10 mm

Product No.	Cyl. Ø mm	Thread KK	AX mm	CE mm	CN^{H7} mm	EN$^{-0.1}$ mm	ER mm	LE mm	Z Degrees	Weight g
810 005 10	10	M4	14	27	5	8	6,5	10	5°	20
810 005 12	12/16	M6	14	30	6	9	9,5	11	5°	20
810 005 20	20	M8	16	36	8	12	11	13	5°	50
810 005 25	25/32	M10x1,25	20	43	10	14	14	15	13°	90
810 005 40	40	M12x1,25	22	50	12	16	16	17	13°	130
810 005 50	50/63	M16x1,5	28	64	16	21	21	22	15°	330
810 005 80	80	M20x1,5	33	77	20	25	25	26	15°	670

Piston Rod Swivel Mountings

Materials:
Housing: Steel, zinc-plated.
Bolt: Steel, hardened.
Nut: Steel, zinc-plated.

Mounting element at the piston rod.

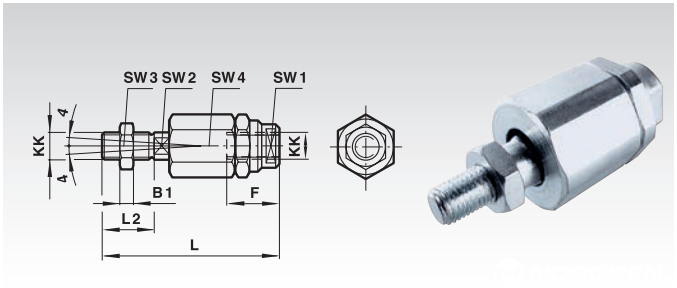

Ordering Details: e.g.: Product-No. 810 000 10, Piston Rod Swivel Mounting for Cylinder Ø 10 mm, Thread M4

Product No.	Cyl. Ø mm	Thread KK	B1 mm	F mm	L mm	L2 mm	SW1 mm	SW2 mm	SW3 mm	SW4 mm	Weight g
810 000 10	10	M4	2	12,5	33	8	11	3,2	7	11	15
810 000 12	12/16	M6	3	14	39	12	7	5	10	13	24
810 000 20	20	M8	4	18	55	16	10	7	13	17	54
810 000 25	25/32	M10x1,25	5	26	73	20	19	12	17	30	233
810 000 40	40	M12x1,25	6	26	77	24	19	12	19	30	200
810 000 50	50/63	M16x1,5	8	34	106	32	30	19	24	42	650
810 000 80	80	M20x1,5	10	42	122	40	30	19	30	42	720

Trunnion Mountings

Materials:
Mounting: Steel, zinc-plated.
Bolts: Steel, zinc-plated.

Mounting element at the bearing or end cover.

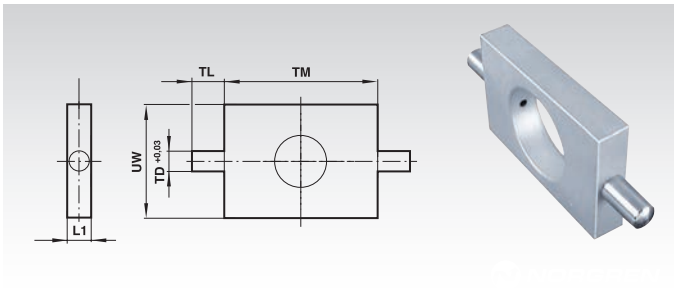

Ordering Details: e.g.: Product-No. 810 021 12, Trunnion Mounting for Cylinder Ø 12/16 mm

Product No.	Cyl. Ø mm	L1 mm	TD$^{+0,03}$ mm	TL mm	TM mm	UW mm	Weight g
810 021 12	12/16	8	6	10	38	25	51
810 021 20	20/25	8	6	10	46	30	67

Foot Plate Mountings

Material:
Steel, zinc-plated.

Mounting element at the bearing or end cover.

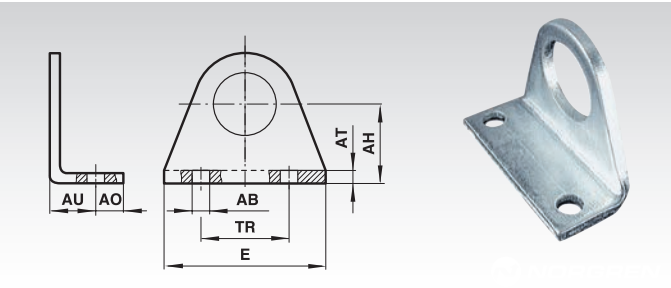

Ordering Details: e.g.: Product-No. 810 020 10, Foot Plate Mounting for Cylinder Ø 10 mm

Product No.	Cyl. Ø mm	AB mm	AH mm	AO mm	AT mm	AU mm	E mm	TR mm	Weight g
810 020 10	10	4,5	16	6	2	10	35	25	20
810 020 12	12/16	5,5	20	6	3	13	43	32	30
810 020 20	20/25	6,6	25	7,5	4	16	53	40	50

Nuts for the Piston Rod Bearing

Material:
Steel, zinc-plated.

Mounting element at the bearing or end cover.

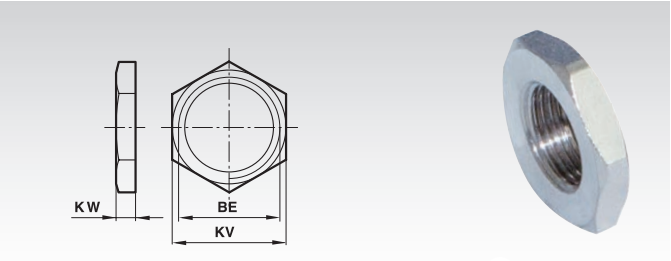

Ordering Details: e.g.: Product-No. 810 024 10, Nut on Piston Rod Bearing for Cylinder Ø 10 mm

Product No.	Cyl. Ø mm	BE	KV mm	KW mm	Weight g
810 024 10	10	M12x1,25	19	6	10
810 024 12	12/16	M16x1,5	22	5	9
810 024 20	20/25	M22x1,5	27	8	17

Mounting Elements for Magnetic Switch at Profile Barrel for ≥ 15 mm Stroke

Materials:
Mounting: Plastic.
Screw: Steel, zinc-plated.

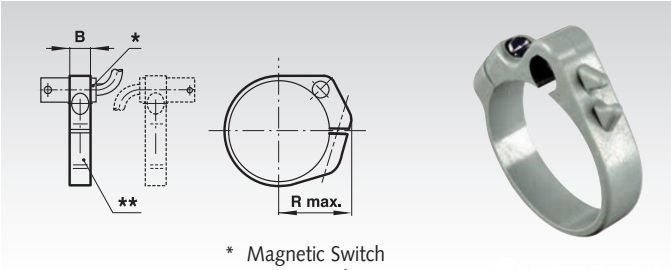

* Magnetic Switch
**Mounting Element

Ordering Details: e.g.: Product No. 810 017 10, Mounting Elements for Magnetic Switch ≥ 15 mm Stroke for Cylinder Ø 10 mm

Product No.	Cyl. Ø mm	B mm	R max. mm	Weight g
810 017 10	10	8	16	3
810 017 12	12	8	18	4
810 017 16	16	10	20	6
810 017 20	20	10	22	6
810 017 25	25	10	24	7

Bracket Hinge Mountings with Circlip

Materials:
Mounting: Steel, zinc-plated.
Bolts: Stainless Steel.

Mating bracket for rear end mounting.

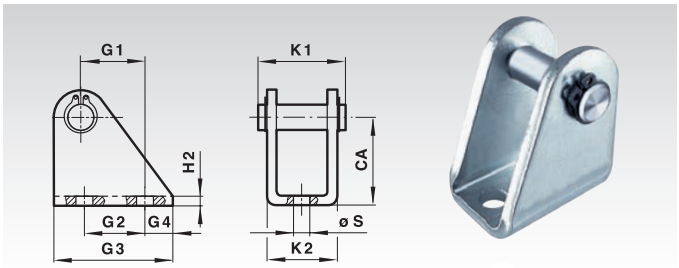

Ordering Details: e.g.: Product No. 810,023 10, Bracket Hinge, Rear with Circlip for Cylinder Ø 10 mm

Product No.	Cyl. Ø mm	Bolt Ø mm	CA mm	G1 mm	G2 mm	G3 mm	G4 mm	H2 mm	K1 mm	K2 mm	Ø S mm	Weight g
810 023 10	10	4	24	11	12,5	20	4	2,5	17,5	13	4,5	18
810 023 12	12/16	6	27	13	15	25	5	3	23	18	5,5	35
810 023 20	20/25	8	30	16	20	32	6	4	29,5	24	6,6	77

Bracket Hinge Mountings with Split Pin

Materials:
Mounting: Steel, zinc-plated.
Bolts: Stainless Steel.

Mating bracket for rear end mounting.

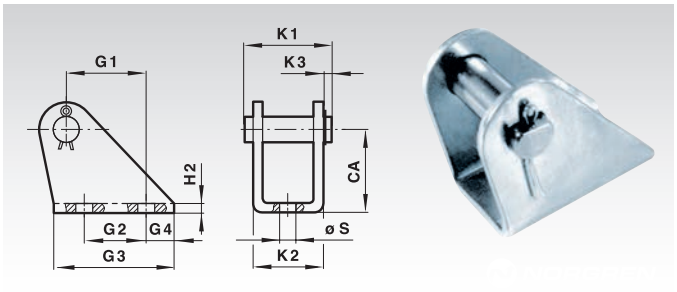

Ordering Details: e.g.: Product No. 810 022 10, Bracket Hinge, Rear with Split Pin for Cylinder Ø 10 mm

product No.	Cyl. Ø mm	Bolt Ø mm	CA mm	G1 mm	G2 mm	G3 mm	G4 mm	H2 mm	K1 mm	K2 mm	K3 mm	Ø S mm	Weight g
810 022 10	10	4	12	6,5	-	15	6	1	13,5	10,5	2	4,8	5
810 022 12	12/16	6	20	18,5	15	30	8	1,5	20	15	3	5,5	20
810 022 20	20/25	8	25	20	15	35	10	2	25	20,5	3	6,6	40

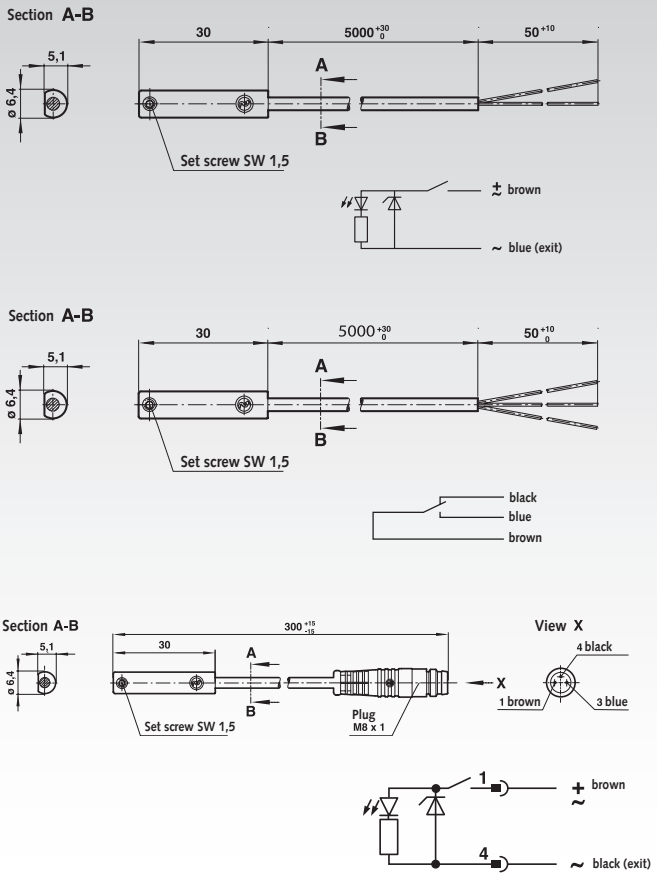



Materials:
Housing: Plastic. Cable: PVC 2 x 0.25, PVC 3 x 0.25.
Mode of operation: N/O with LED (yellow), change over contact without LED.
Switching Voltage (Ub):10 to 240 V AC/170 V DC.
Switching Voltage output: Ub - 2.7 V.
Switching current (see graph): 0.18 A max.
Switching power: 10 W/10 VA max.

Note: Switch life may be greatly reduced if the maximum values for contact load, switching current and switching voltage are exceeded.

Contact resistance: 150 mW.
Response time: 1.8 ms.
Operating temperature: -20°C to +80°C.
Protection rating: IP 66 (DIN 40050).
Shock resistance: 50 g (during 11 ms).
Vibration resistance: 35 g (at 2000 Hz).

Ordering details: e.g.: Product No. 810 000 01, Magnetic Switch, N/O, 2 m cable

Product No.	Function	Cable Length m	Weight g
810 000 01	N/O, without Plug	5	92
810 000 02	Change-over, without Plug	5	92
810 000 03	N/O, with Plug	0,3	16

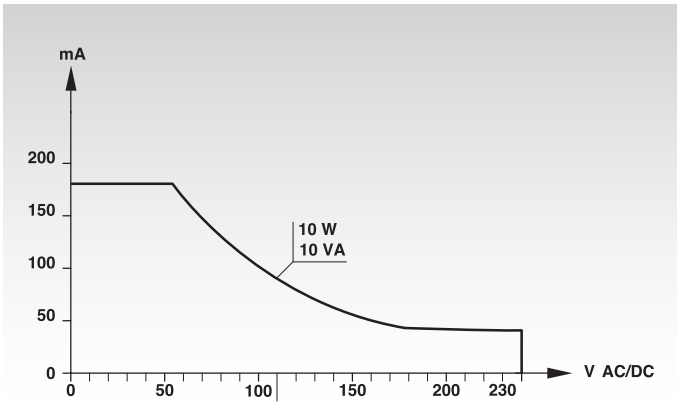



Plug-In Connector Cable for Prod.-No. 810 000 03

Material: PVC 3 x 0.25.

Product No.	Cable Length m	Weight g
810 000 00	5	150

Magnetic Switch, Solid State

Product No. 810 000 04

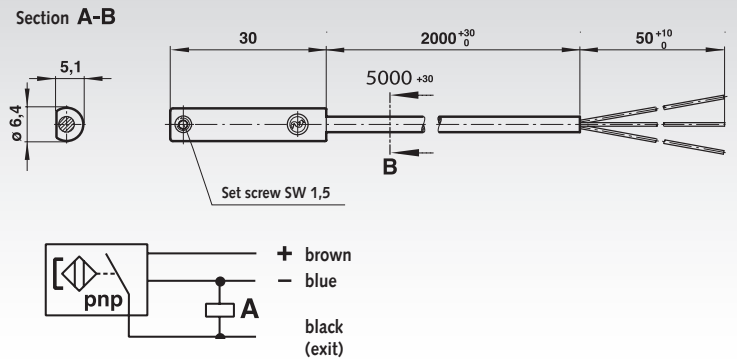



Product No. 810 000 06

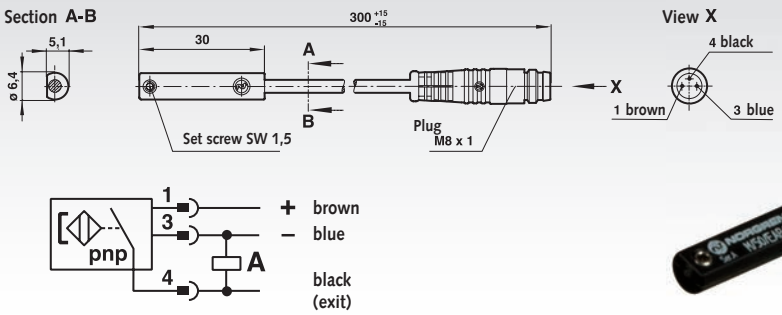



Materials:
Housing Plastic, EMC according to EN 60947-5-2.
Cable: PVC 3 x 0.25.

Mode of Operation: Output with LED (yellow).
Switching voltage (Ub): 10 to 30 V DC.
Switching voltage output: Ub - 2 V.
Induced voltage: 0.5 V.
Switching Current (see Graph): max. 150 mA.
Switching power: max. 4.5 W.
Response time: < 0.5 ms.
Operating frequency: 5 kHz.
Operating temperature: -20°C to +80°C.
Protection rating: IP 67 (DIN 40050).
Cable length: 2 m.

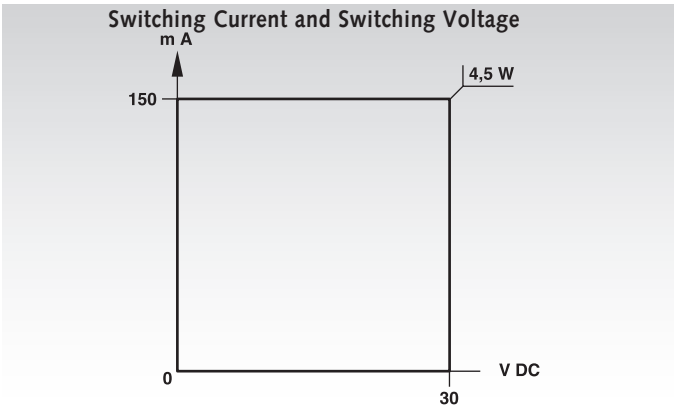

Ordering Details: e.g.: Product No. 810 000 04, Magnetic Switch without plug

Magnetic Switch

Product No.	Function	Cable length m	Weight g
810 000 04	pnp, without plug	5	92
810 000 06	pnp, with plug	0,3	16



Plug-in connector cable for Prod.-No. 810 000 06 / 810 000 07

Material: PVC 3 x 0.25.

Product No.	Cable length m	Weight g
810 000 00	5	150

2/2 Solenoid Valves DN 10, Short Version, Nominal diameter 10 mm

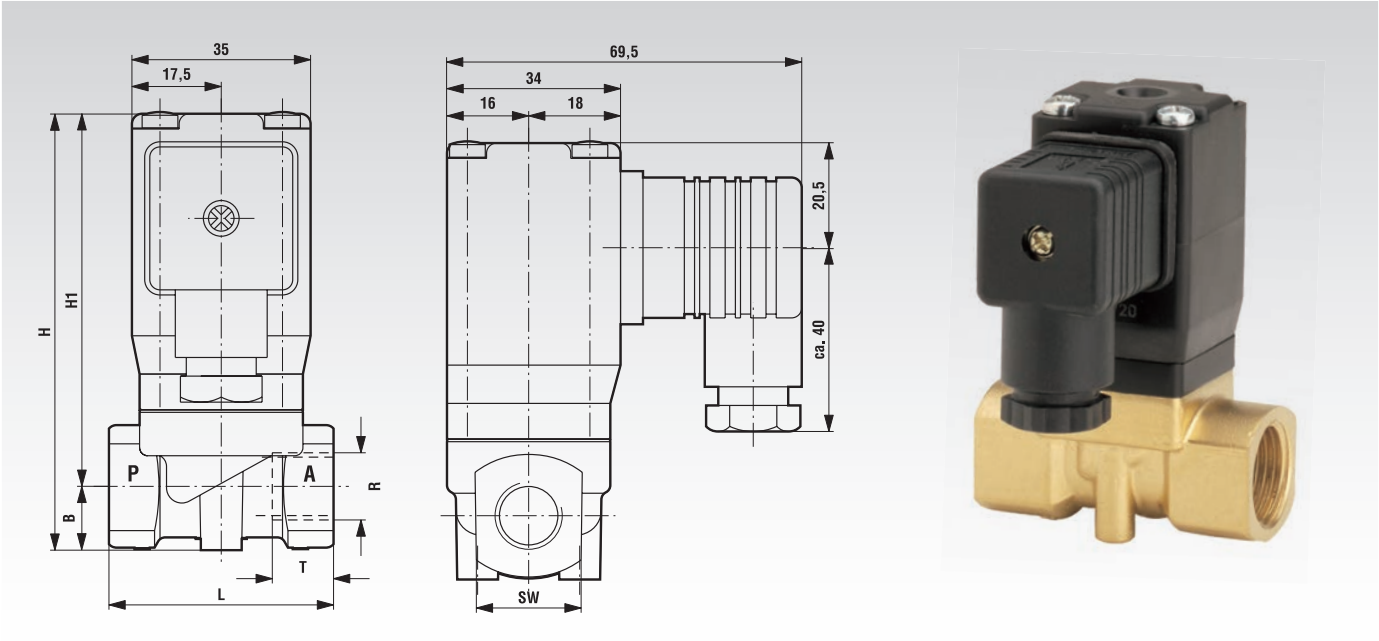

Material:
Housing: Brass, PA66.
Seat seal: NBR (Perbunan).
Internal parts: 1.4104, 1.4303, PVDF.

- For neutral gaseous and liquid fluids.
- Electromagnetically actuated valve, with forced valve lifting.
- Diaphragm valves.
- Connection internal thread G1/4 to G1/2.
- Operating pressure 0 to 10 bar (up to 25 mm^2/s cSt).

For contaminated fluids insertion of a strainer is recommended.

Description (standard unit):
Solenoid valve for, e.g., air , water, oil.
Switching function: Normally closed.
Flow direction: determined.
Fluid temperature: -10°C to +90°C.
Ambient temperature: -10 °C to +50°C.
Mounting position: optional, preferably solenoid vertical on top.

Features
- Suitable for vacuum.
- Clear design.
- Compact solenoid with integrated core tube.
- Valve works without minimum pressure difference (Zero ΔP).
- Operating pressure 0 - 20 bar with alternating voltage and NBR seal.

Symbol

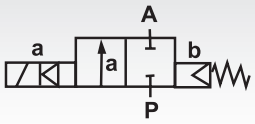

Ordering details: e.g.: Product No., Voltage, Connection

Product No.	Voltage	Connection (Thread)	B mm	H mm	H1 mm	L mm	SW mm	T mm	kv-Value* Base m^3/h	Weight kg
851 114 11	24V DC	G1/4	14	87	73	44	21	12	1,5	0,5
851 114 12	230V 50/60Hz	G1/4	14	87	73	44	21	12	1,5	0,5
851 138 11	24V DC	G3/8	14	87	73	44	21	12	1,7	0,5
851 138 12	230V 50/60Hz	G3/8	14	87	73	44	21	12	1,7	0,5
851 112 11	24V DC	G1/2	14	90	74,5	60	27	15	1,7	0,6
851 112 12	230V 50/60Hz	G1/2	14	90	74,5	60	27	15	1,7	0,6

* Cv-Value (US) = kv-Value x 1.2.

Power consumption

According to DIN VDE 0580 at a coil temperature of +20°C. At operating state temperature of the solenoid (DC) the power consumption decreases, for physical reasons by up to approx. 30%.

DC	AC	
	Inrush	Holding
12 W	20 VA	16 VA

Magnet

Design according to VDE 0580.
Voltage range ±10%.
100% duty cycle.
Protection class acc. to EN 60529 IP65.
Socket acc. to DIN EN 175301-803 (in accessory box).intermitten

2/2 Solenoid Valves, DN 20 and DN 25, Standard Version

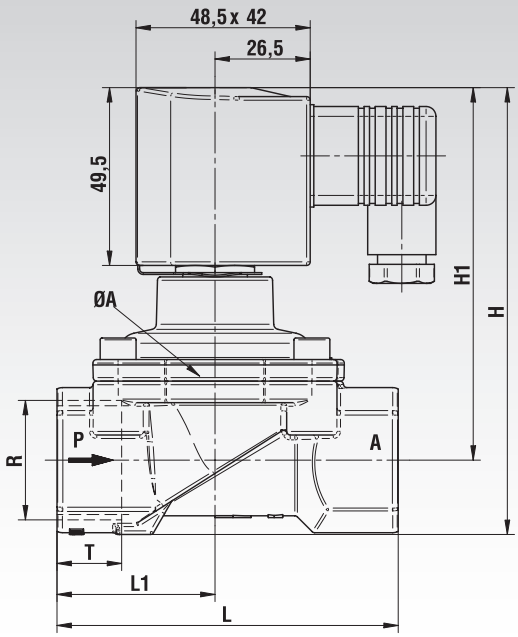



Material:
Housing: Brass.
Seat seal: NBR (Perbunan).
Internal parts: Stainless steel, PVDF, Brass.

- For neutral gaseous and liquid fluids.
- Electromagnetically actuated valve, with forced valve lifting.
- Diaphragm valves.
- Connection internal thread G3/4 and G1.
- Operating pressure 0 to 10 bar (up to 25 mm^2/s cSt).

For contaminated fluids insertion of a strainer is recommended.

Description (standard unit)
Solenoid valve for, e.g., air , water, oil.
Switching function: Normally closed.
Flow direction: determined.
Fluid temperature: -10°C to max. +90°C.
Ambient temperature: -10°C to max. +50°C.
Mounting position: optional, preferably solenoid vertical on top.

Features
- High flow rate.
- For rugged applications.
- Damped operation.
- Suitable for vacuum.
- For systems with low or changing pressure difference.
- Valve works without minimum pressure difference (Zero ΔP).
- Solenoid can be replaced without tools.

Symbol

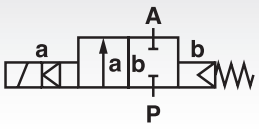

Ordering details: e.g.: Product No., Voltage, Connection

Product No.	Voltage	Connection (Thread)	Nominal Ø mm	ØA mm	H mm	H_1 mm	L mm	L_1 mm	T mm	kv-Value* Base m^3/h	Weight kg
851 234 11	24V DC	G3/4	20	50	115	99	80	36,5	16	5,8	1,00
851 234 12	230V 50/60Hz	G3/4	20	50	115	99	80	36,5	16	5,8	1,00
851 210 11	24V DC	G1	25	62	124	103,5	95	44	18	8,0	1,30
851 210 12	230V 50/60Hz	G1	25	62	124	103,5	95	44	18	8,0	1,30

* Cv-Value (US) = kv-Value x 1.2.

Power consumption

According to DIN VDE 0580 at a coil temperature of +20°C. At operating state temperature of the solenoid (DC) the power consumption decreases, for physical reasons by up to approx. 30%.

DC	AC	
	Inrush	Holding
18 W	20 VA	18 VA

Note: For explosion-proof solenoids (on request) the permissible temperature range decreases.

Magnet

Design according to VDE 0580.
Voltage range ±10%.
100% duty cycle.
Protection class acc. to EN 60529 IP65.
Socket acc. to DIN EN 175301-803 A (in accessory box).

3/2 Solenoid Valves, Single Pilot, Normally closed

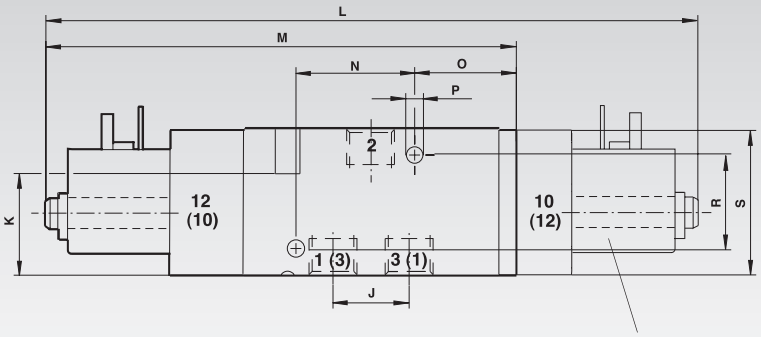

Version with twin pilot on request.



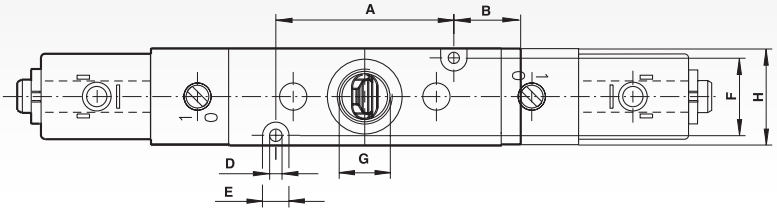

Materials:
Housing and base plates: Aluminium, Spindle: Stainless steel; Piston, spacers and cover: Plastic; Static and dynamic seals: NBR; Screws: zinc-plated; Springs: Stainless Steel.

Standard pilot controls with replaceable solenoid system for all common voltages.

The valves are suitable for lubricated or non-lubricated standard compressed air.

At normal operating conditions the system has a lifespan of 50 million switching cycles.

The valve system (cartridge) is an optimised version of the million-times proven sealing system. Manual override with detent.

Symbol

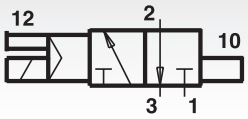

Ordering Details: e.g.: Product No. 850 118 11, 3/2 Solenoid Valve, Connecting Thread G 1/8, Voltage 24 V

Product No.	Connection	Voltage	Flow (l/min)	Operating pressure (bar)	Weight g	Product No. Socket*	Product No. Spare Solenoid*
850 118 11	G 1/8	24V DC	750	2 - 8	220	**858 000 01**	**858 000 06**
850 118 12	G 1/8	230V 50/60Hz	750	2 - 8	220	**858 000 01**	**858 000 07**
850 128 11	G 1/4	24V DC	1300	2 - 8	290	**858 000 01**	**858 000 06**
850 128 12	G 1/4	230V 50/60Hz	1300	2 - 8	290	**858 000 01**	**858 000 07**

* See page 633.

Dim.	A	B	C	D	E	F	G	H	J	K	L	M	N	O	P	R	S	T	U
G1/8	35	16	–	3,2	6,5	17	G1/8	22	16,2	28	-	114	25	25	4,5	26	35	–	–
G 1/4	46	18	–	3,2	6,5	20	G1/4	25	21	28	-	130	32	29	4,5	26	40	–	–

Solenoid and Voltage Selection

22mm solenoid with plug interface according to DIN 43650 Form B.

Voltage: 24V DC.
Solenoid power inrush/holding: 2W.

Voltage: 230V 50/60Hz.
Solenoid power inrush/holding: 6/5VA.

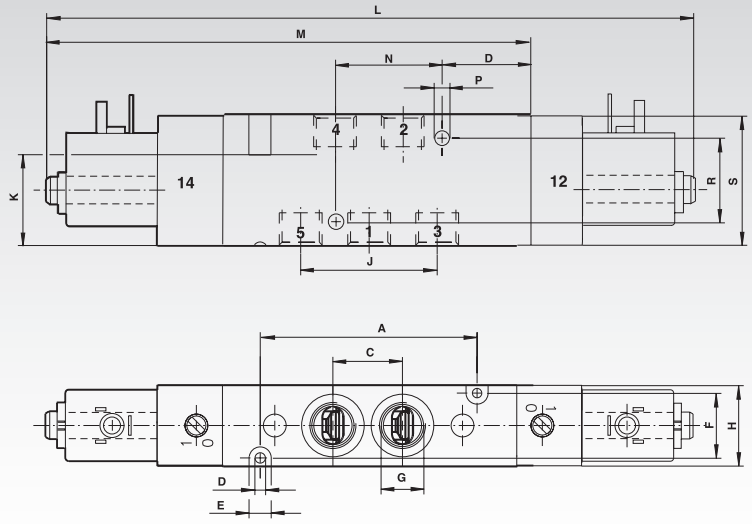

Single pilot



Double pilot



Materials:
Housing and base plates: Aluminium, Spindle: Stainless steel; Piston, spacers and cover: Plastic; Static and dynamic seals: NBR; Screws: zinc-plated; Springs: Stainless Steel.

Standard pilot controls with replaceable solenoid system for all common voltages.

The valves are suitable for lubricated or non-lubricated standard compressed air.

At normal operating conditions the system has a lifespan of 50 million switching cycles.

The valve system (cartridge) is an optimised version of the million-times proven sealing system. Manual override with detent.

Symbol

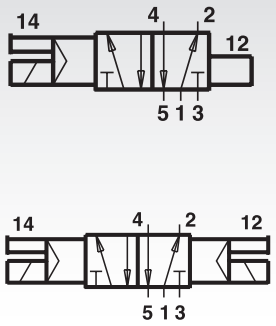

Ordering Details: e.g.: Product No. 850 318 11, 5/2 Solenoid Valve, Connecting Thread G 1/8, Voltage 24 V, Single Pilot

Product No. single pilot	Product No. twin pilot	Connection	Voltage	Flow (l/min)	Operating pressure (bar)	Weight g	Product No. Socket*	Product No. Spare Solenoid*
850 318 11	**850 418 11**	G 1/8	24V DC	750	2 - 8	240	**858 000 01**	**858 000 06**
850 318 12	**850 418 12**	G 1/8	230V 50/60Hz	750	2 - 8	240	**858 000 01**	**858 000 07**
850 328 11	**850 428 11**	G 1/4	24V DC	1300	2 - 8	330	**858 000 01**	**858 000 06**
850 328 12	**850 428 12**	G 1/4	230V 50/60Hz	1300	2 - 8	330	**858 000 01**	**858 000 07**

* See page 633.

Dim.	Design	A	B	C	D	E	F	G	H	J	K	L	M	N	O	P	R	S	T	U
G 1/8	Rest Position	50	16	16,2	3,2	6,5	17	G1/8	22	32,4	28	–	129	25	25	4,5	26	35	–	–
G 1/4	Rest Position	66	1821		3,2	6,5	20	G1/4	25	42	28	–	150	32	29	4,5	26	40	–	–

Solenoid and Voltage Selection

22 mm solenoid with plug interface according to DIN 43650 Form B.

Voltage: 24V DC.
Solenoid power inrush/holding: 2W.

Voltage: 230V 50/60Hz.
Solenoid power inrush/holding: 6/5VA.

5/3 Solenoid Valves, with twin pilot

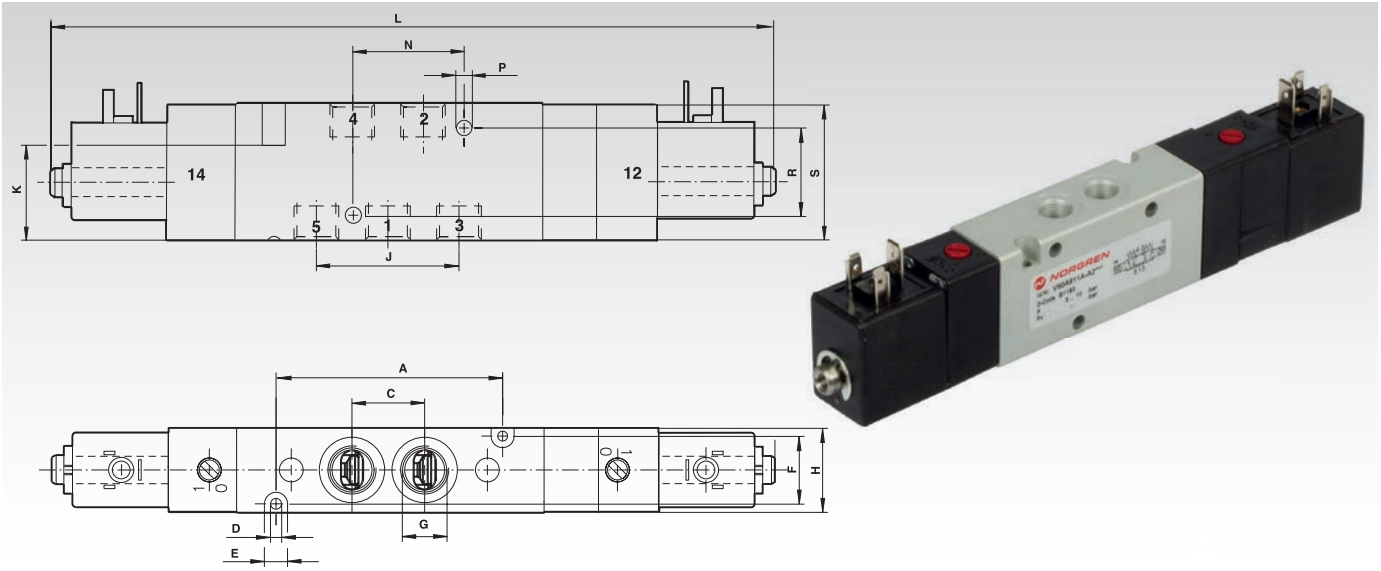

Materials:
Housing and base plates: Aluminium, Spindle: Stainless Steel;
Piston, spacers and cover: Plastic; Static and dynamic seals: NBR;
Screws: zinc-plated;
Springs: Stainless Steel.

Standard pilot controls with replaceable solenoid system for all common voltages.

The valves are suitable for lubricated or non-lubricated standard compressed air.

At normal operating conditions the system has a lifespan of 50 million switching cycles.

The valve system (cartridge) is an optimised version of the million-times proven sealing system. Manual override with detent.

Version A: Rest position: all connections locked

Symbol



Version B: Rest position: Connection 2 and 4 relieved

Symbol



Ordering Details: e.g.: Product No. 850 518 11, 5/3 Solenoid Valve, Connecting Thread G 1/8, Voltage 24 V

Product No. Version A	Product No. Version B	Connection	Voltage	Flow (l/min)	Operating pressure (bar)	Weight g	Product No. Socket*	Product No. Spare Solenoid*
850 518 11	**850 618 11**	G 1/8	24V DC	500	3 - 8	350	**858 000 01**	**858 000 06**
850 528 11	**850 628 11**	G 1/4	24V DC	950	3 - 8	470	**858 000 01**	**858 000 06**
850 528 12	**850 628 12**	G 1/4	230V 50/60Hz	950	3 - 8	470	**858 000 01**	**858 000 07**

* See below.

Dim.	A	B	C	D	E	F	G	H	J	K	L	M	N	O	P	R	S	T	U
G1/8	50	–	16,2	3,2	6,5	17	G1/8	22	32,4	28	189	–	25	–	4,5	26	35	–	–
G 1/4	66	–	21	3,2	6,5	20	G1/4	25	42	28	217	–	32	–	4,5	26	40	–	–

Solenoid and Voltage Selection

22 mm solenoid with plug interface according to DIN 43650 Form B.

Solenoid can be turned in steps of 90°.

Voltage: 24V DC ± 10%.
Solenoid power inrush/holding: 2W.

Voltage: 230V ± 10%, 50/60Hz.
Solenoid power inrush/holding: 6/5VA.

Duty cycle: 100% ED.

Protection rating: IP 65 with sealed connectors (ISO 6952).

Socket according to DIN 43650, without Cable

Material: Polyamide.
Weight: 20 g.

Product No.
858 000 01



Spare Solenoids according to DIN 43650

Weight: 63 g.

Product No.	24 V DC
858 000 06	

Product No.	230 V 50/60 Hz
858 000 07	



Product No. 830 001 00

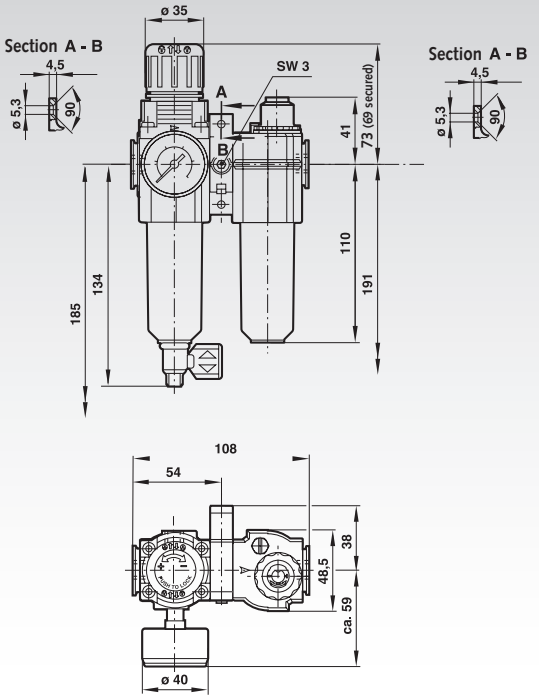

Product No. 830 003 00

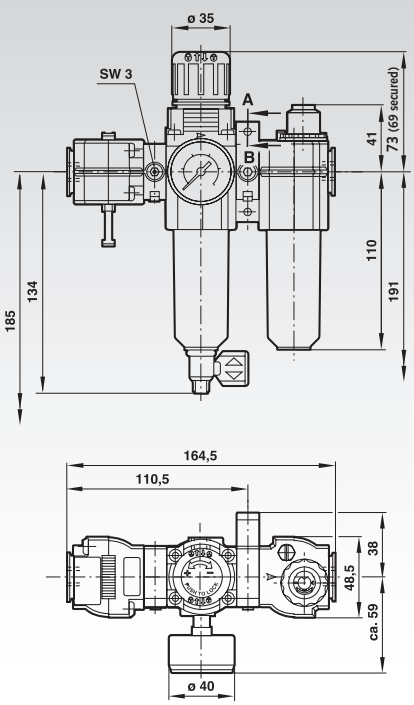



Materials:
Bowl: Polycarbonate.
Housing: Zinc die-cast.
O-ring seals: synthetic elastomers.
Filter element: Polypropylene.

Medium: Compressed Air.
Operating temperature: -20°C to +65°C.
For temperatures below +2°C please take the air properties into account.

Operating pressure: max. 10 bar.
Pressure range: 0.3 to 10 bar.
Relief valve: Standard with relief valve.
Pressure Gauge: Standard.
Filter element: 40 µm standard.
Bowl size (oiler): 0.04 litre.
Max. flow: 13 l/s (connection G1/4, inlet pressure 10 bar.
Set pressure: 6.3 bar, Δp = 1 bar).
Draining: Manual.
Oiler version: Micro-fog oiler.

Ordering Details: e.g.: Product No. 830 001 00, Air Preparation Unit without Shut-Off Valve

Symbol	Product No.	Connection	Shut-off valve	Weight g
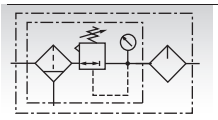	**830 001 00**	G 1/4	without	1122
	830 003 00	G 1/4	with	1415

Air preperation equipment consists of Shutt-off Valve, Filter-Regulator and Micro-fog Oiler

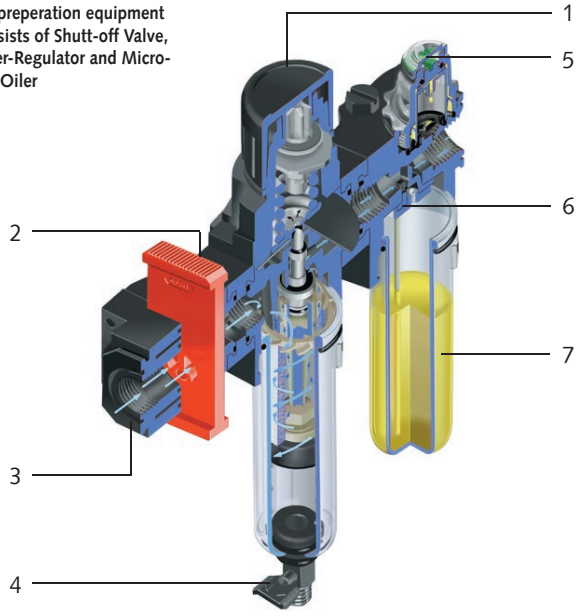

The patented Quikclamps® allows the equipment to be used in individual or modular installations. The Quikclamp®-Connection Set also allows the mounting and maintenance of individual units without removing the tubes. Equipment like pressure regulators can be easily mounted in four different operation levels.

1 Push-to-lock adjusting knob.
2 Easy mounting and maintenance due to Quikclamp®.
3 3/2-way shut-off valve – compact, lockable, with relief function.
4 Easy handling for manual draining of condensate.
5 Lubricator sight-feed dome simplifies adjustment and readability of the oil drip rate.
6 Micro-fog oiler produces a fine oil fog – ideal for long and complex pipeworks.
7 Quick release bayonet bowl.

Pressure Regulator (with Relief Function)

Materials:
Housing: Zinc die-cast.
End covers: Polyacetal.
Valve: Brass.
O-ring seals: Synthetic elastomers.

Medium: Compressed air.
Operating pressure: Max. 20 bar.
Pressure range: 0.3 to 10 bar as standard.
Relieving Operation: Relief function as standard.
Max. flow: 33 l/s (connection G1/4, inlet pressure 10 bar, set pressure: 6.3 bar, Δp = 1 bar).

Ordering details: e.g.: Product No. 830 005 00, Pressure Regulator with Relief Valve, Connection G1/4

Symbol	Product No.	Connection	Weight g
	**830 005 00**	G1/4	360

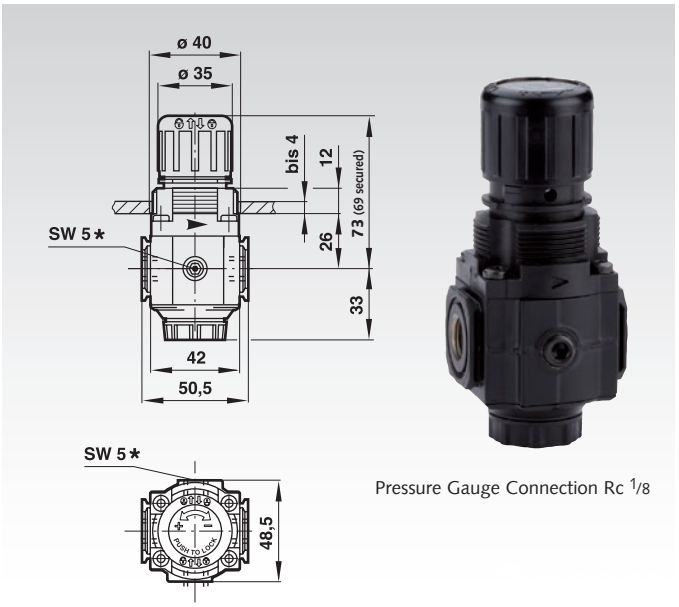

Pressure Gauge Connection Rc 1/8

Compressed-Air Filter

Materials:
Bowl: Polycarbonate.
Housing: Zinc die-cast.
O-ring seals: Synthetic elastomers.
Filter element: Polypropylene.

Medium: Compressed air.
Operating pressure: Max. 10 bar.
Max. flow: 28 l/s (Connection G 1/4).
Operating pressure = 6.3 bar.
Δp = 0.5 bar.
Filter element 40 µm.
Draining: Manual as standard.

Ordering details: e.g.: Product No. 830 007 00, Compressed-Air Filter with Manual Draining, Connection G 1/4

Symbol	Product No.	Connection	Weight g
	**830 007 00**	G 1/4	490

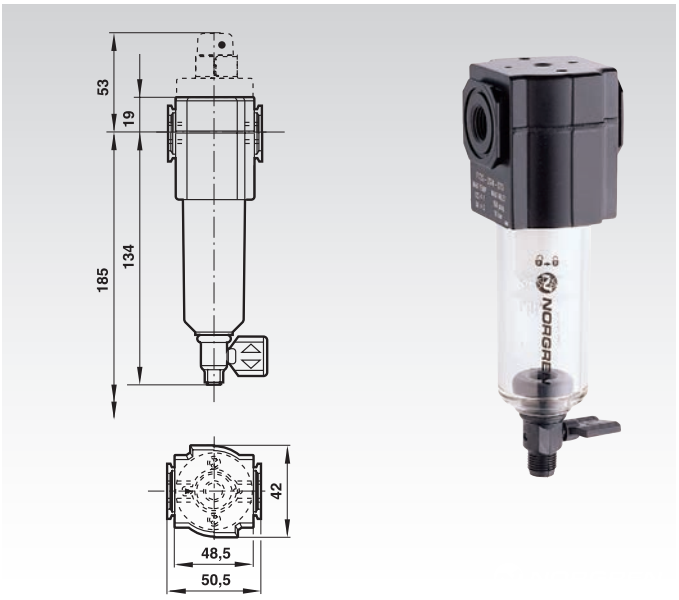

Filter / Regulators

Materials:
Bowl: Polycarbonate.
Housing: Zinc die-cast.
O-ring seals: synthetic elastomers.
Filter element: Polypropylene.

Medium: Compressed Air.
Operating pressure: max. 10 bar.
Filter element: 40 µm standard.
Draining: Manual.
Pressure range: 0.3 to 10 bar as standard.
Relief valve: Standard with relief valve.
Max. flow: 38 l/s (connection G1/4, inlet pressure 10 bar, Set pressure 6.3 bar, Δp = 1 bar, filter element 40 µm).

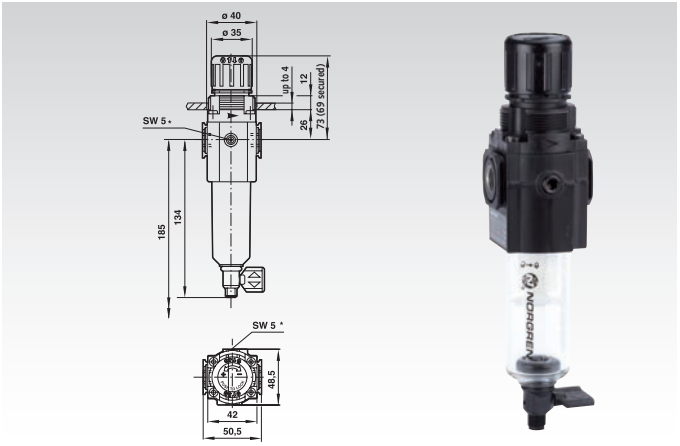

Ordering Details: e.g.: Article No. 830 011 00, Filter/ Regulator with Manual Draining

Symbol	Product No.	Connection	Weight g	Product No. Spare filter
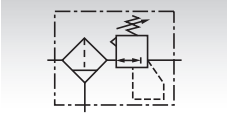	**830 011 00**	G1/4	520	**830 007 01**

Micro-Fog or Standard Fog Oilers

Materials:
Bowl: Polycarbonate.
Housing: Zinc die-cast.
O-ring seals: synthetic elastomers.
Sight-feed dome: Polycarbonate.

Medium: Compressed Air.
Operating pressure: max. 10 bar.
Bowl size: 0.04 litre.
Flow: 0.47 l/s to 24 l/s*.
*Max. value (connection G 1/4, inlet pressure = 6.3 bar, Δp = 0.5 bar).

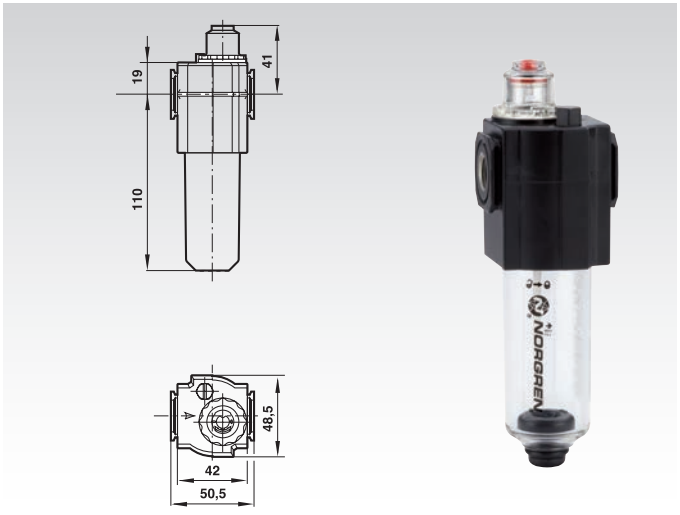

Ordering Details: e.g.: Product No. 830 013 00, Micro-Fog Oiler

Symbol	Product No.	Connection	Type	Weight g
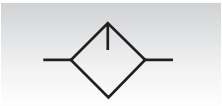	**830 013 00**	G1/4	Micro-fog oiler	490
	830 015 00	G1/4	Standard Fog Oiler	490

Pressure Relief Valve

Materials:
Housing: Zinc die-cast.
End cover: Polyacetal.
O-ring seals: synthetic elastomers.

Medium: Compressed Air.
Operating pressure: max. 17 bar.
Pressure range: 0.3 to 10 bar as standard.

Ordering Details: e.g.: Product No. 830 017 00, Pressure Relief Valve

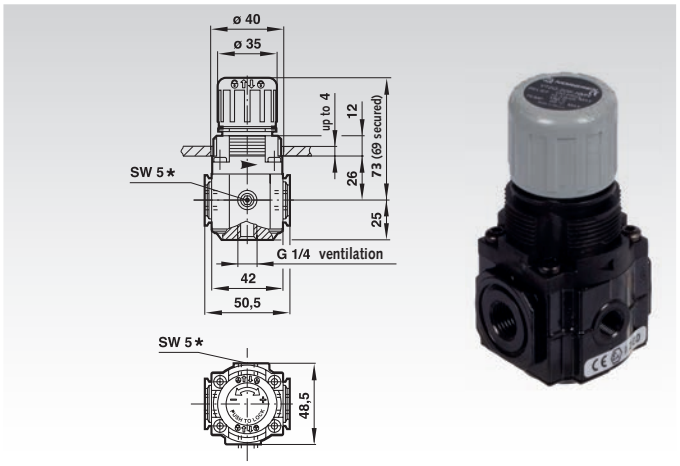

Symbol	Product No.	Connection	Weight g
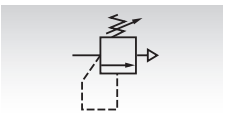	**830 017 00**	G1/4	330

3/2 Way Shut-Off Valve (manual)

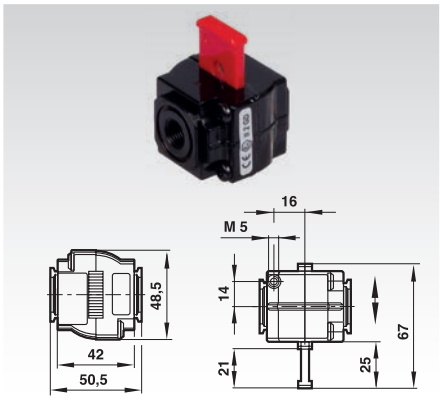

Materials:
Housing: Zinc die-cast.
Slider: Plastic:

Symbol	Product No.	Connection	Weight g
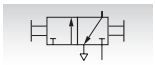	830 022 00	G1/4	293

Universal Mounting Bracket

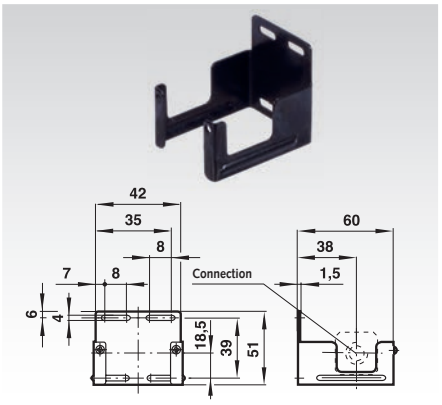

Material:
Steel.

Product No.	Weight g
830 031 00	49

Universal Mounting Bracket

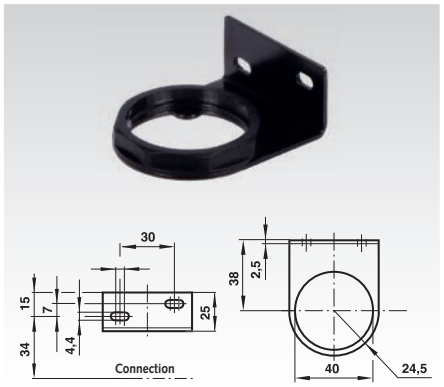

Materials:
Nut: Plastic: Bracket: Steel.

Product No.	Weight g
830 033 00	72

Panel Mounting Nut



Material:
Plastic:

Product No.	Weight g
830 035 00	3

Pressure Gauge



Materials: Housing, viewing glass: Plastic.
Connecting thread: Brass.
Operating pressure: 0-10 bar. T = -20°C to 60°C

Product No.	Connection	Ø mm	Weight g
830 037 00	R1/8	40	43

Secure hold and unproblematic multiple mounting, due to high-quality grab ring.

Mounting holes for wall mounting*.

O-Ring seals with parallel threads (G).

PTFE-free pre-applied thread sealant with taper threads (R).

Internal hexagons on all straight fittings offer easy mounting.

Colour codings for improved safety*.

Red release rings for quick identification of metric tube sizes*.

O-ring seals made from silicone-free Nitrile rubber.

*** Only for Pneufit C.**

Pneufit C Fittings

- Housing made primarily from plastic.
- Low cost.
- Modern design.
- Increasing distribution.

Pneufit Push-In Fast Connectors

- Housing made primarily from nickel plated brass.
- Classical design.

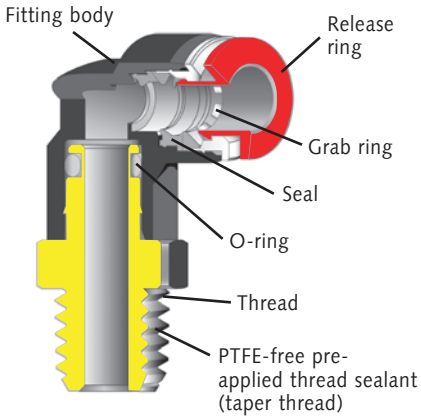

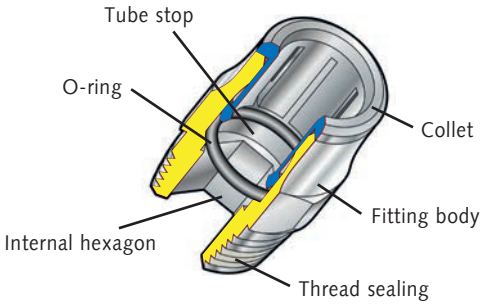

Technical Data:
Medium: Compressed Air.
Operating pressure: 18 bar max.
(Regulating-out banjo bolts max. 10 bar).
Vacuum: 98% max.**
Operating temperature: -20°C* to 80°C
(High temperature models on request).
*For temperatures below +2°C please take the air properties into account.

** Only for Pneufit Push-In.

Tube sizes
4, 6, 8, 10, 12, 14 mm outside Ø.
Note: Push-on fittings must not be used in compressed-air break systems of commercial vehicles.

Tubes/hoses
Polyamide tube 11 and 12, polyurethane and polyethylene hoses according to DIN 73378, DIN 74234, NFE 49-100 or BS 5409/1. For safety reasons we recommend our tubes and hoses.

Fastening torques
The following fastening torques apply for fittings with pre-applied thread sealant and taper threads:

Thread	Fastening Torque (Nm)
R1/8	6,86 ... 8,82
R1/4	11,76 ... 13,72
R3/8	21,56 ... 25,32
R1/2	27,44 ... 29,40

Pneufit C dimensions

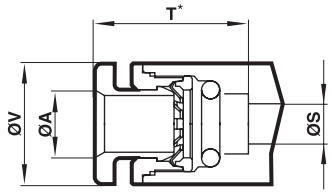

Ø A	Ø S*	Ø T**	V_{max}
4 mm	2,8	15,3	10,7
6 mm	4,4	17,1	12,9
8 mm	6,0	19,2	14,5

Pneufit Push-In dimensions

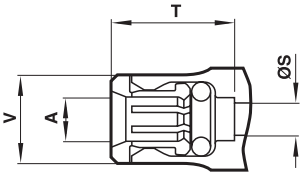

Ø A	Ø S*	Ø T**	V_{max}
4	2,8	14,0	7,5
6	4,4	15,5	11,0
8	6,0	16,5	13,0
10	7,6	21,0	14,5
12	9,6	24,5	18,0
14	11,5	24,5	20,0

* Dimensions valid for all threaded connectors (exemptions possible).

** Dimensions with pushed out grab ring.

Mounting

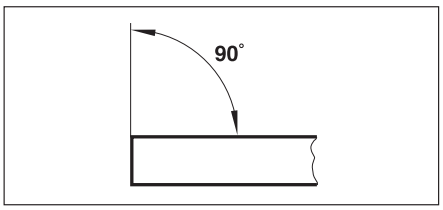

Ensure that tube is cut off square and is free from burrs.

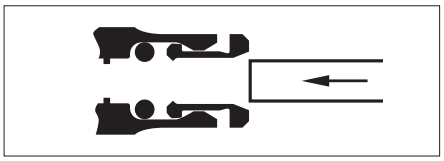

Push end of tube (outside surface must be free from damage) into the collet.

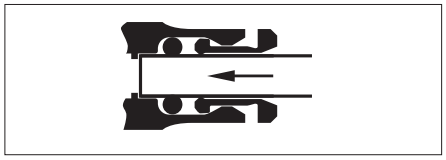

Push the tube firmly through the O-ring until it bottoms on the Stop.

disassembly

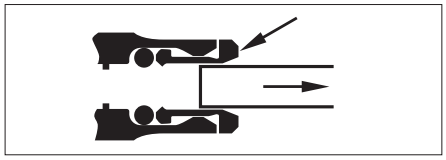

Push the collet against the fitting and withdraw the tube.

Pneufit C Fittings

Ø A = matching tube outer diameter. B = Thread (G for parallel, R for conical).
Drawings with complete dimensions can be found on the internet under www.maedler.de

Straight Unions

Product No.	Ø A mm
866 104 00	4
866 106 00	6
866 108 00	8



Swivel Elbow Adaptors with Taper Thread

Product No.	Ø A mm	B
866 404 18	4	R1/8
866 404 14	4	R1/4
866 406 18	6	R1/8
866 406 14	6	R1/4
866 408 18	8	R1/8
866 408 14	8	R1/4



Straight Adaptors with Taper Thread

Product No.	Ø A mm	B
866 204 18	4	R1/8
866 204 14	4	R1/4
866 206 18	6	R1/8
866 206 14	6	R1/4
866 208 18	8	R1/8
866 208 14	8	R1/4



Swivel Elbow Adaptors with Cylindrical Thread

Product No.	Ø A mm	B
866 504 18	4	G1/8
866 504 14	4	G1/4
866 506 18	6	G1/8
866 506 14	6	G1/4
866 508 18	8	G1/8
866 508 14	8	G1/4



Straight Adaptors with Cylindrical Thread

Product No.	Ø A mm	B
866 304 18	4	G1/8
866 304 14	4	G1/4
866 306 18	6	G1/8
866 306 14	6	G1/4
866 308 18	8	G1/8
866 308 14	8	G1/4



Swivel Tee-Adaptors with Cylindrical Thread

Product No.	Ø A mm	B
866 604 18	4	G1/8
866 604 14	4	G1/4
866 606 18	6	G1/8
866 606 14	6	G1/4
866 608 18	8	G1/8
866 608 14	8	G1/4



Union Elbows

Product No.	Ø A mm
866 124 00	4
866 126 00	6
866 128 00	8



Pneufit Push-In fittings

Ø A = matching tube outer diameter. B = Thread (G for parallel, R for conical).
Drawings with complete dimensions can be found on the internet under www.maedler.de

Straight Adaptors with Cylindrical Thread

Product No.	Ø A mm	B
860 104 03	4	M3
860 104 05	4	M5
860 104 18	4	G 1/8 A
860 104 28	4	G 1/4 A
860 106 05	6	M5
860 106 18	6	G 1/8 A
860 106 28	6	G 1/4 A
860 108 18	8	G 1/8 A
860 108 28	8	G 1/4 A
860 108 38	8	G 3/8 A
860 108 48	8	G 1/2 A
860 110 18	10	G 1/8 A
860 110 28	10	G 1/4 A
860 110 38	10	G 3/8 A
860 110 48	10	G 1/2 A
860 112 28	12	G 1/4 A
860 112 38	12	G 3/8 A
860 112 48	12	G 1/2 A
860 114 38	14	G 3/8 A
860 114 48	14	G 1/2 A



Straight Unions

Product No.	Ø A mm
860 604 00	4
860 606 00	6
860 608 00	8
860 610 00	10
860 612 00	12



Push-In Silencers

Product No.	Ø A mm
861 404 00	4
861 406 00	6
861 408 00	8



Plugs

Product No.	Ø A mm
861 104 00	4
861 106 00	6
861 108 00	8
861 110 00	10
861 112 00	12



Reducing / Enlarging Connectors

Product No. Reducing	Ø A1 mm	Ø A mm
860 906 04	6	4
860 908 04	8	4
860 908 06	8	6
860 910 06	10	6
860 910 08	10	8
Enlarging:		
860 904 06	4	6
860 906 08	6	8



Pneufit Push-In fittings

Ø A = matching tube outer diameter. B = Thread (G for parallel, R for conical).
Drawings with complete dimensions can be found on the internet under www.maedler.de

Swivel Elbow Adaptors with Cylindrical Thread

Product No.	Ø A mm	B
861 704 05	4	M5
861 704 18	4	G1/8A
861 704 28	4	G1/4A
861 706 05	6	M5
861 706 18	6	G1/8A
861 706 28	6	G1/4A
861 708 18	8	G1/8A
861 708 28	8	G1/4A
861 708 38	8	G3/8A
861 710 28	10	G1/4A
861 710 38	10	G3/8A
861 710 48	10	G1/2A
861 712 28	12	G1/4A
861 712 48	12	G1/2A



Swivel Elbow Adaptors 45° with O ring

Product No.	Ø A mm	B mm
862 006 18	6	G1/8A
862 006 28	6	G1/4A
862 008 18	8	G1/8A
862 008 28	8	G1/4A



Elbow Connectors

Product No.	Ø A mm
862 104 00	4
862 106 00	6
862 108 00	8
862 110 00	10
862 112 00	12



Swivel Elbow Bulkhead Connectors

Product No.	Ø A mm
862 206 00	6
862 208 00	8
862 210 00	10



Stem Elbow Connectors

Product No.	Ø A mm	Ø A1 mm
862 304 00	4	4
862 306 00	6	6
862 308 00	8	8



Tee Connectors

Product No.	Ø A mm
862 604 00	4
862 606 00	6
862 608 00	8
862 610 00	10
862 612 00	12



4-Way Cross Connectors

Product No.	Ø A mm
862 906 00	6
862 908 00	8
862 910 00	10



Parallel Y-Connectors

Product No.	Ø A mm	Ø A1 mm
863 004 00	1x4	2x4
863 006 00	1x6	2x6
863 008 00	1x8	2x8
863 010 00	1x10	2x10
863 006 04	1x6	2x4
863 008 06	1x8	2x6
863 010 08	1x10	2x8



Elbow Banjo Assembly with Sealing Ring

Material: Brass, nickel plated.

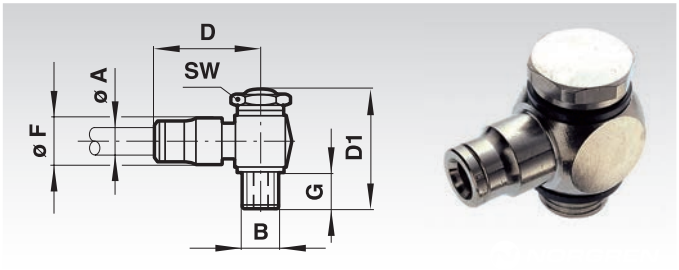

Ordering details: e.g.: Product No. 863 504 05, Elbow Banjo Assembly with Sealing Ring, Tube Outer-Ø 4 mm, Thread M5

Product No.	Ø A mm	B	D mm	D1 mm	SW mm	Ø F mm	G mm	Weight g
863 504 05	4	M5	18,7	22	8	9,5	4,0	13
863 504 18	4	G1/8A	20,6	30	14	11,0	6,0	34
863 506 05	6	M5	22,2	22	8	12,5	4,0	17
863 506 28	6	G1/4A	24,2	34	17	13,0	7,4	54
863 508 18	8	G1/8A	23,7	30	14	14,0	6,0	37
863 508 28	8	G1/4A	24,7	34	17	14,0	7,4	56
863 508 38	8	G3/8A	26,7	41	22	16,5	9,0	112
863 510 28	10	G1/4A	30,2	34	17	16,0	7,4	59

Elbow Banjo Assembly, Regulating Out, with Sealing Ring

Material: Brass, nickel plated.

Symbol

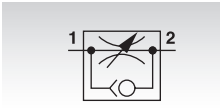

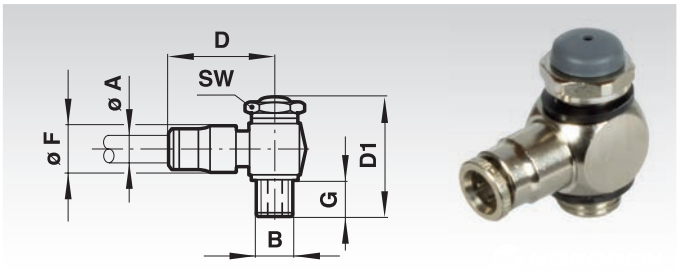

Ordering details: e.g.: Product No. 863 604 05, Elbow Banjo Assembly, Regulating Out, with Sealing Ring, Tube Outer-Ø 4 mm, Thread M5

Product No.	Ø A mm	B	D mm	D1 mm	SW mm	Ø F mm	G mm	Weight g
863 604 05	4	M5	18,7	27,0	8	9,5	4,4	13
863 604 18	4	G1/8A	20,6	34,0	14	11,0	6,0	34
863 606 05	6	M5	22,2	27,0	8	12,5	4,4	17
863 606 18	6	G1/8A	23,7	34,0	14	12,5	6,0	37
863 606 28	6	G1/4A	24,2	36,5	17	13,0	6,0	58
863 608 28	8	G1/4A	24,7	36,5	17	14,0	6,0	59
863 608 38	8	G3/8A	26,7	51,5	22	16,5	10,0	123
863 608 18	8	G1/8A	23,7	34,0	14	13,5	6,0	39
863 610 28	10	G1/4A	30,2	36,5	17	15,7	6,0	63

Banjo Bolts with Sealing Rings

Materials: Brass, nickel plated.

For combination with banjo bodies.

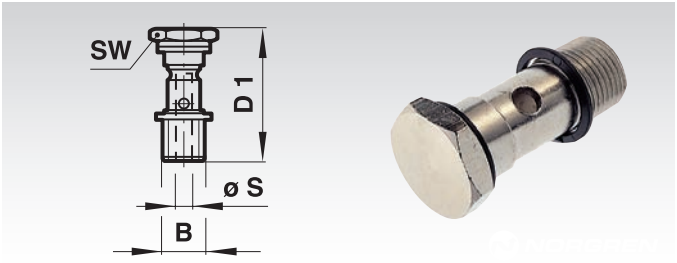

Ordering details: e.g.: Product No. 864 700 18, Banjo Bolt with Sealing Rings, G1/8A

Product No.	B	D1 mm	SW mm	Ø S mm	Weight g
864 700 18	G1/8A	30	14	5,0	15
864 700 28	G1/4A	34	17	8,5	25
864 700 38	G3/8A	41	22	10,0	60

Hinges at MÄDLER®:



on the internet at www.maedler.de

Ball Valves Made from Brass, Exhausting, Full Bore

Materials: Housing: Brass, nickel plated,
Ball seat: PTFE, O-ring seals: Viton.

Operating pressure: 0 to 45 bar.
Operating temperature: -20°C to +150°C.

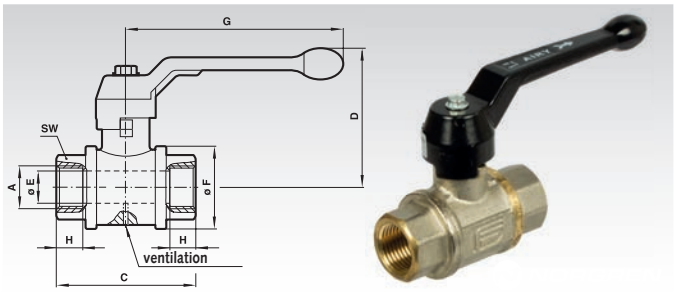

Ordering details e.g.: Product No. 865 131 28, Ball Valves Made from Brass, Exhausting, Full Bore, Internal Thread G1/4

Product No.	A	C mm	D mm	Ø E mm	Ø F mm	G mm	H mm	SW mm	Weigth g
865 131 28	G1/4	57	61	8	29	100	6,5	22	259
865 131 38	G3/8	54	61	10	29	100	8,5	22	245
865 131 48	G1/2	69	64	15	35	100	9,5	27	365
865 131 68	G3/4	77	76	20	45	120	10,5	33	619
865 131 88	G1	89	80	25	54	120	11,5	40	883

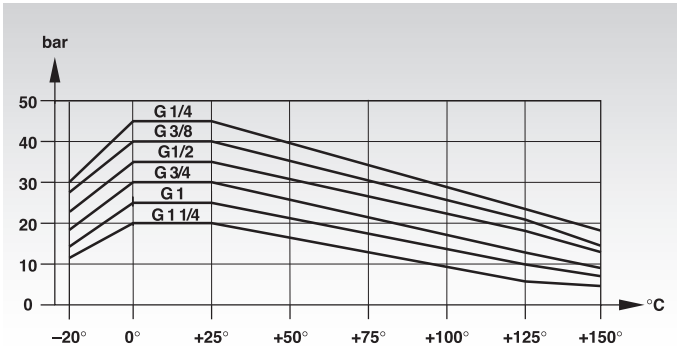

Ball Valves Made from Brass, Full Bore

Materials: Housing: Brass, nickel plated.
Seat: PTFE, O-ring seals: Viton.

Operating pressure: 0 to 45 bar.
Operating temperature: -20°C to +150°C.

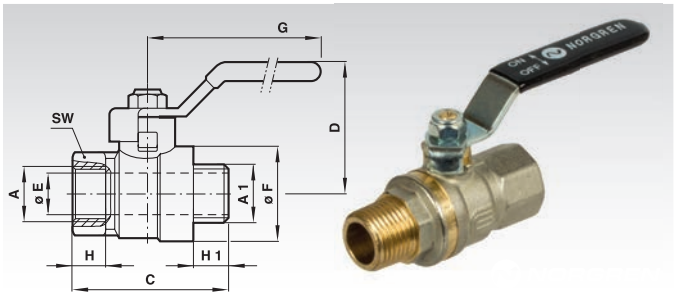

Ordering details e.g.: Product No. 865 022 28, Ball Valves made from Brass, Standard, Full Bore, External thread G1/4

Product No.	A	A1	C mm	D mm	Ø E mm	Ø F mm	G mm	SW mm	H mm	H1 mm	Weigth g
865 022 28	G1/4	G1/4A	50	36	8	23	85	18	6,5	6,5	128
865 022 38	G3/8	G3/8A	54	36	10	24	85	21	8,5	8,5	154
865 022 48	G1/2	G1/2A	65	40	15	30	85	25	9,5	9,5	212
865 022 68	G3/4	G3/4A	75	47	20	38	105	31	10,5	10,5	365
865 022 88	G1	G1A	86	51	25	46	105	38	11,5	11,5	545

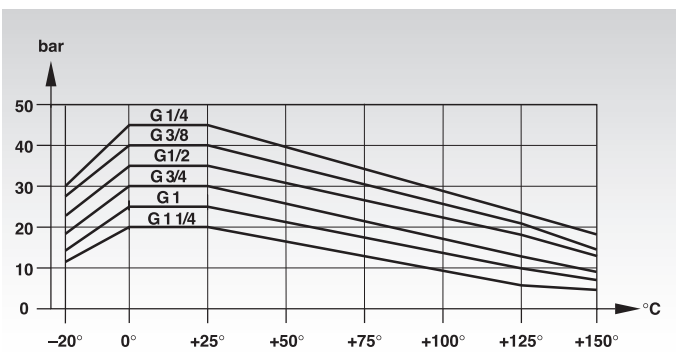

Exhaust Filters

Material: Housing: Aluminium. Filter element: Sintered metal.
Operating pressure: max. 10 bar.

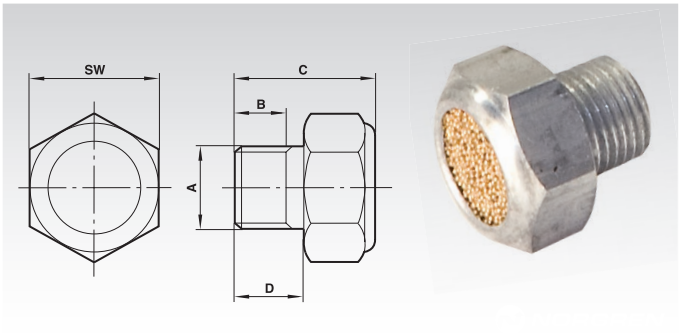

Ordering details e.g.: Product No. 865 315 11, Exhaust Filter, Thread Outer Ø G1/8A

Product No.	A	B mm	C mm	D mm	SW mm	Flow at 6 bar Operating Pressure m³/h	Weight g
865 315 11	G1/8A	6	16	8	15	11,3	6
865 315 12	G1/4A	8	22	10	23	27,7	18
865 315 14	G1/2A	10,5	25	13	30	37,8	30
865 315 16	G3/4A	14	31	16	42	98,3	50
865 315 18	G 1 A	15	35	19	47	138,6	91

Silencers

Material: Filter element: Sintered metal. Housing: Brass.
Operating pressure: max. 10 bar.

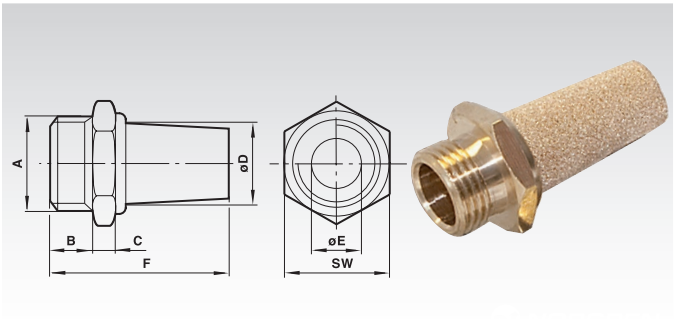

Ordering details e.g.: Product No. 866 005 00, Silencer, Thread M5

Product No.	A	B mm	C mm	Ø D mm	Ø E mm	F mm	SW mm	Venting Noise dB(A), Measuring Distance 1m at 0,7 bar	at 6 bar	Weight g
866 005 00	M5	5	5	5	2,5	2,0	7	56	70	4
866 018 00	G 1/8 A	6	5	9,5	6	24	13	66	75	10
866 028 00	G 1/4A	8	5	12	8,5	33	17	68	78	20
866 038 00	G 3/8 A	10	5	17	12	44	22	75	84	39
866 048 00	G 1/2 A	12	5,5	20	14,8	56	27	75	88	68
866 068 00	G 3/4 A	14	6	26	19	80	32	87	96	130
866 088 00	G 1 A	16	6	31	25	82	41	93	100	200

Block Form Flow Regulators, Uni Directional

Materials:
M5: Housing plastic. Threaded insert: Brass,
Seals: Nitrile rubber. Valve needle: Brass, nickel plated.

G1/8, G1/4: Housing: Zinc alloy. Seals: Nitrile rubber,
Valve needle/inner part: Brass. Outer parts: Aluminium alloy.
G3/8, G1/2: Housing: Aluminium alloy. Seals: Nitrile rubber.
Valve needle/inner part: Brass. Outer parts: Aluminium alloy.
Medium: Compressed air, filtered, lubricated or non-lubricated.
Inert gases.
Operating pressure: 1 to 10 bar (2 to 10 bar for M5).
Operating temperature: max. +80°C (60°C max. for M5).
Mode of operation: Flow regulator.

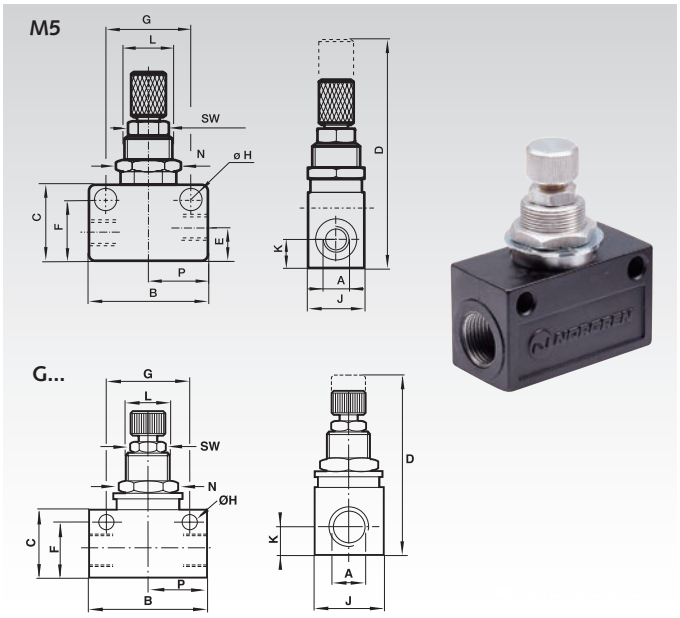

Ordering details e.g.: Product No. 865 405 00, Block Form Flow Regulators, Uni Directional, Thread M5

Symbol



Product No.	A	B	C	D	E	F	G	H	J	K	L	SW	N	P	Panel Bore	Max. Panel Thickness	Weight
		mm	mm	mm	mm	mm	mm	mm	mm	mm	mm	mm	mm	mm	mm	mm	g
865 405 00	M 5	25	15	45	6,5	12	18	4,5	12	5,5	M10x0,75	8	12	12,5	10,5	4	12
865 418 00	G 1/8	34	20	51	-	16,5	24	4,5	16	8	M12x1	10	14	17	12,5	4	65
865 428 00	G 1/4	45	25,5	61,5	-	21	32	4,5	19	9,5	M14x1	10	17	22,5	14,5	4	115
865 438 00	G 3/8	58	32,5	78,5	-	27	43	6,5	28	13	M20x1	14	24	29	20,5	4	153
865 448 00	G 1/2	65	36	82	-	30,5	50	6,5	30	15	M20x1	14	24	32,5	20,5	4	186

Flow dates

Max. Flow in regulating direction at 6 bar l/min	Max. Flow against regulating direction at 6 bar l/min	Kv-Value in regulating direction 1 to 2	Flow at 6 bar in regulating direction 1 to 2 m³/h	Kv-Value against regulating direction 2 to 1	Flow at 6 bar against regulating direction 2 to 1 m³/h
200	210	0,13	12,1	0,14	12,6
550	550	0,37	33	0,37	33
1800	2460	1,2	108,1	1,64	148
2770	3000	1,84	166,05	1,99	180

Quick Exhaust Valves

Materials: Housing and cover: Aluminium or zinc alloy.
Seals: Nitrile rubber.

Medium: Compressed air, filtered, lubricated or non-lubricated.
Mode of operation: Poppet valve.
Mounting: In-line.
Operating pressure: 0.5 to 10 bar.
Operating temperature: max. +80°C.

- Enables air to be dumped quickly from air reservoirs and cylinders.
- Allows higher cylinder speeds to be achieved.

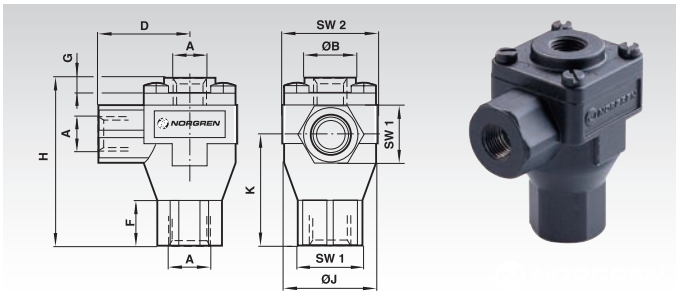

Ordering details e.g.: Product No. 865 518 00, Quick Exhaust Valves, Thread G1/8

Symbol

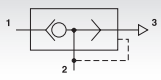

Product No.	A	Ø B	D	F	G	H	Ø J	K	SW 1	SW 2	Weight
		mm	mm	mm	mm	mm	mm	mm	mm	mm	g
865 518 00	G 1/8	19	28	15,3	3,5	53	29	35,5	19	30	150
865 528 00	G 1/4	19	28	15,3	3,5	53	29	35,5	19	30	130
865 538 00	G 3/8	30	40	15,5	4	73,5	46	48	30	46	210
865 548 00	G 1/2	30	40	15,5	4	73,5	46	48	30	46	190

Product No.	Ports		Port	Kv-Value		Flow at 6 bar Operating pressure (m³/h)	
	Primary	Secondary	Size	1 to 2	2 to 3	1 to 2	2 to 3
865 518 00	G 1/8	G 1/8	G 1/8	1,06	1,23	95,80	110,9
865 528 00	G 1/4	G 1/4	G 1/4	2,23	2,46	201,6	221,8
865 538 00	G 3/8	G 3/8	G 3/8	4,47	5,02	403,2	453,6
865 548 00	G 1/2	G 1/2	G 1/2	6,14	6,84	554,4	617,4

Non-Return Valves

Material: Housing: Anodised aluminium.
Seals Nitrile rubber.

Medium: Compressed air, filtered, lubricated or non-lubricated.
Mode of operation: Poppet valve.
Operating pressure: -0.9 to 16 bar.
Operating temperature: 80°C.

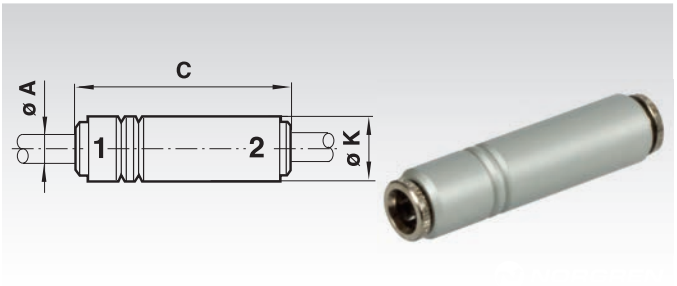

Ordering details e.g.: Product No. 865 800 04, Non-Return Valves, Tube Outer-Ø 4 mm

Symbol



Product No.	Ø A mm	C mm	Ø K mm	Flow Operating Pressure 6 bar	Weight g
865 800 04	4	49	11	0,11 (159.6 l/min)	10
865 800 06	6	56,5	13	0,44 (659,4 l/min)	16
865 800 08	8	61	15	0,89 (1344 l/min)	22
865 800 10	10	77,5	20	1,26 (1890 l/min)	48
865 800 12	12	88,5	22	1,87 (2814 l/min)	64

Plug with Sealing Ring

Material: Brass, nickel plated.

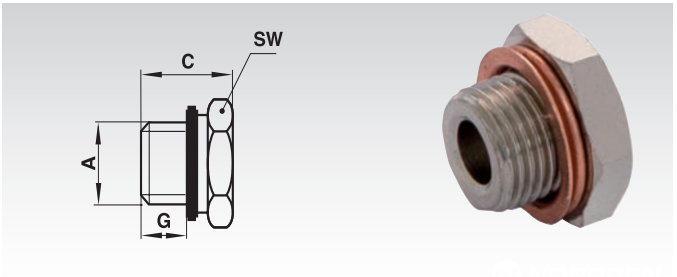

Ordering details e.g.: Product No. 865 900 05, Plug with Sealing Ring, Thread M5

Product No.	A	C mm	G mm	SW mm	Weight g
865 900 05	M5	8	4,5	8	2
865 900 28	G1/4 A	13	9	17	13
865 900 38	G 3/8 A	13,5	9,5	19	20
865 900 48	G1/2 A	14,5	10	24	27
865 900 68	G3/4 A	16	11	30	49
865 900 88	G 1 A	17	12	40	190

Tube Cutter

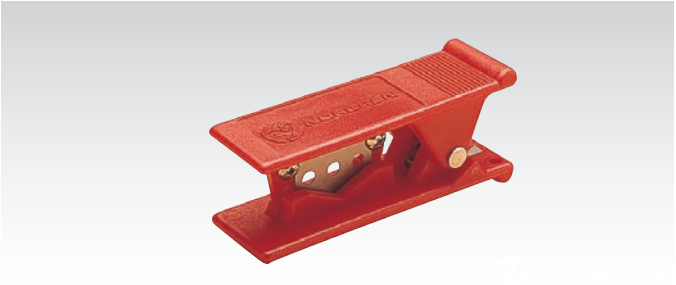

Ordering details e.g.: Product No. 869 999 00, Tube Cutter

Product No.	Weight g
869 999 99	25

Disconnection Tool



Ordering details e.g.: Product No. 869 999 90, Disconnection Tool

Product No.	Weight g
869 999 90	45

Polyamide Tubes PA

Dimensions and tolerances to DIN 73378.



Ordering details e.g.: Product No. 869 804 01 Polyamide Tube Outer Ø 4 mm, Inner-Ø 2.5 mm, Length (Max. Length 100 m)

Product No. Natural	Product No. Blue	Product No. Black	Ø Outer mm	Ø Inner mm	Weight per m g
869 804 01	**869 804 02**	**869 804 03**	4	2,5	10
869 806 01	**869 806 02**	**869 806 03**	6	4	20
869 808 01	**869 808 02**	**869 808 03**	8	6	30
869 810 01	**869 810 02**	**869 810 03**	10	7,5	50
869 812 01	**869 812 02**	**869 812 03**	12	9	70
869 814 01	**869 814 02**	**869 814 03**	14	11	90

Polyurethane Hoses PU

Dimensions and tolerances to DIN 73378.



Ordering details e.g.: Product No. 869 904 01, Polyurethane Hose, Outer Ø 4 mm, Inner Ø 2.5 mm, Length (Max. Length 100 m)

Product No. Natural	Product No. Blue	Product No. Black	Ø Outer mm	Ø Inner mm	Weight per m g
869 904 01	**869 904 02**	**869 904 03**	4	2,5	13
869 906 01	**869 906 02**	**869 906 03**	6	4	25
869 908 01	**869 908 02**	**869 908 03**	8	5,5	40
869 910 01	**869 910 02**	**869 910 03**	10	7	50
869 912 01	**869 912 02**	**869 912 03**	12	8	100

Note

Max. Operating Pressure

Tube Outer-Ø		4 mm	6 mm	8 mm	10 mm	12 mm	14 mm
Max. Pressure*	Polyamide Tube	28 bar	25 bar	19 bar	24 bar	18 bar	15 bar
at -40 °C to +20 °C	Polyurethane Hose	10 bar	9 bar	9 bar	9 bar	9 bar	-
Min. Bend Radius	Polyamide Tube	25 mm	30 mm	50 mm	60 mm	75 mm	80 mm
Min. Bend Radius	Polyurethane Hose	6 mm	9 mm	16 mm	17 mm	25 mm	-

* Permissible Operating Pressure = Max. Operating Pressure x Factor.

Conversion factor: Temp. / Operating Pressure

Operating Pressure	Factor
+ 30 °C	0.83
+ 40 °C	0.72
+ 50 °C	0.64
+ 60 °C	0.57
+ 70 °C	0.47

Maximum permanent operating temperature:
PA +80°C. PU +60°C.

Blow Gun with Metal Nozzle

Material: Composite material. Port thread with brass insert, Nozzle: Steel thread.

Applications:
- Blow off and remove chippings, swarf and dust.
- Cleaning of machines, work benches, work places, and areas which are difficult to reach.
- Drying of work pieces.
- Can be used with air and water.

Blow guns are made from a high-tech composite material and thus very rugged, scratch-resistant, insulating and slip proof. Perfect mounting safety due to brass insert (G1/4 inch internal thread). The blow guns feature good ergonomics. This ergonomic shape means no swarf or dust can gather on the gun.

Steel nozzle: Ø 3 x 6 mm.
Length of nozzle: 110 mm.
Flow at 6 bar: 23 N.m³/h.

Temperature: -15 to +70°C.
G 1/4 internal thread.
Max. operating pressure: 10 bar.



Product No.	A mm	Weight g
870 001 00	235	138

Ordering details: e.g.: Prod.-No. 870 001 00, Blow Gun with Metal Nozzle

Hoses and tail pieces see next page.

Blow Gun with Straight, Scratch-Resistant Nozzle

Material: Composite material. Port thread with brass insert.
Nozzle: Composite material to prevent surface from getting damaged.

Applications:
- Blow off and remove chippings, swarf and dust.
- Cleaning of machines, work benches, work places, and areas which are difficult to reach.
- Drying of work pieces.
- Can be used with air and water.

Blow guns are made from a high-tech composite material and thus very rugged, scratch-resistant, insulating and slip proof. Perfect mounting safety due to brass insert (G1/4 inch internal thread). The blow guns feature good ergonomics. This ergonomic shape means no swarf or dust can gather on the gun.

Nozzle : Ø 2 x 12 mm.
Length of nozzle: 59 mm.
Flow at 6 bar: 15 N.m³/h.

Temperature: -15 to +70°C.
G 1/4 internal thread.
Max. operating pressure: 10 bar.



Product No.	A mm	Weight g
870 002 00	187	119

Ordering details: e.g.: Prod.-No. 870 002 00, Blow Gun with Straight, Scratch-Proof Nozzle

Hoses and tail pieces see next page.

Blow Gun with Silent Nozzle

Material: Composite material. Port thread with brass insert.
Nozzle: Composite material to lower noise level.

Applications:
- Blow off and remove chippings, swarf and dust.
- Cleaning of machines, work benches, work places, and areas which are difficult to reach.
- Drying of work pieces.
- Can be used with air and water.

Blow guns are made from a high-tech composite material and thus very rugged, scratch-resistant, insulating and slip proof. Perfect mounting safety due to brass insert (G1/4 inch internal thread). The blow guns feature good ergonomics. This ergonomic shape means no swarf or dust can gather on the gun.

Nozzle to lower noise level.

Length of nozzle: 56 mm.
Complies with americ. OSHA standard.

Temperature: -15 to +70°C
G 1/4 internal thread.
Max. operating pressure: 10 bar.



Product No.	A mm	Weight g
870 003 00	185	119

Ordering details: e.g.: Prod.-No. 870 003 00, Blow Gun with Silent Nozzle

Hoses and tail pieces see next page.

Hose Coils with Swiveling Hose Tail

Material: Polyurethane, flexible and extremely rugged.
Fitting made from nickel-plated brass.

The hose retracts to its original shape: the coils will not loose their original shape even under most adverse operating conditions.

Data of fixed fitting on the supply side:
- PTFE pre-coated thread.
- PVC coating to protect hose.

Data of the swivel connection on the side of the compressed-air tool:
- Swivelling joint with ball bearing.
- Easy swivelling, even under pressure, no overstressing of hose coil.

Max. temperature: 70°C. Operating pressure at 20°C: Ø 5 x 8: 9 bar.
Ø 6.5 x 10: 9 bar.
Ø 8 x 12: 8 bar.

Pressure: 10 bar. Flexibility: bendable. Colour: blue.



Ordering details: e.g.: Prod.-No. 870 105 02, Hose Coil 5x8 mm

Product No.	Ø I/O mm	Fixed Connection Inch	Swivel Connection Inch	Max. Length m	Min. Length m	Ø Coil mm	Weight g
870 105 02	5 x 8	G 1/4	G 1/4	2	0,18	42	189
870 105 04	5 x 8	G 1/4	G 1/4	4	0,4	42	290
870 106 04	6,5 x 10	G 1/4	G 1/4	4	0,4	52	413
870 106 06	6,5 x 10	G 1/4	G 1/4	6	0,63	52	577
870 106 08	6,5 x 10	G 1/4	G 1/4	8	0,8	52	711
870 106 10	6,5 x 10	G 1/4	G 1/4	10	0,95	52	877
870 108 08	8 x 12	G 3/8	G 3/8	8	0,72	65	947

Flexible Hoses

Material: PVC, transparent, blue, nylon reinforced.
Used for compressed air, oil and water.



Ordering details: e.g.: Prod.-No. 870 206 12, 6x12 mm

Product No.	Diameter Inner/Outer mm	Operating Pressure at 20°C bar	Max. Pressure at 20°C bar	Max. Temperature °C	Weight g per Meter
870 206 12	6 x 12	15	50	60	97
870 208 14	8 x 14	15	50	60	124
870 209 15	9 x 15	15	50	60	125
870 210 16	10 x 16	15	50	60	147
870 213 20	13 x 20	15	50	60	214

Hose Tail Pieces with Taper External Thread

Material: Brass, nickel plated.

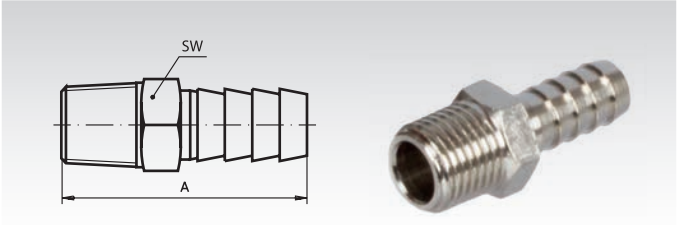

Ordering details: e.g.: Prod.-No. 870 306 14, 1/4", for Hose 6 mm

Product No.	Thread Inch	A mm	Hose-Ø mm	SW mm	Weight g
870 306 14	R 1/4"	36	6	14	15
870 309 14	R 1/4"	36	9	14	15
870 310 14	R 1/4"	36	10	14	19

Standard and Safety Quick-Release Couplings

Standard and safety quick-release couplings ISO 4414, DIN-Standard EN 983. Adaptor profile 7.2 German standard.

The safety locking system of the safety coupling stops the dangerous „whip effect".

The novel locking system of the coupling offers optimum tightness at low coupling forces.
Innovative, patented technology.
Perfect performance and safety.



Standard Quick Coupling





Safety Quick Coupling: one pull and the compressed air is dumped. One push and the adaptor is safely disconnected

Standard and Safety Quick-Release Couplings with Internal Thread

Material: Composite material.

Air-flow-Ø: 7.2/7.4 mm.
Air flow: 1470 l/min ΔP: 0.6 bar.
1920 l/min ΔP: 1 bar.
Adaptor profile: NW 7.2 and NW 7.4.
Operating pressure: 2 to 12 bar.
Max. operating pressure: 16 bar.
Temperature range: -15°C to +70°C.



Safety Quick Coupling

Standard Quick Coupling

Ordering details: e.g.: Prod.-No., Type, Size

Product No. Safety Quick Coupling	Product No. Standard Quick Coupling	Connection	L_1 mm	Ø mm	L_2 mm	Weight Safety Quick Coupling in g	Weight Standard Quick Coupling in g
870 401 14	**870 411 14**	G 1/4	49	32	60	73	72
870 401 38	**870 411 38**	G 3/8	49	32	60	70	65
870 401 12	**870 411 12**	G 1/2	49	32	70	88	87

Standard and Safety Quick-Release Couplings with Parallel External thread (with PTFE Coating)

Material: Composite material.

Air-flow-Ø: 7.2/7.4 mm.
Air flow: 1470 l/min ΔP: 0.6 bar.
1920 l/min ΔP: 1 bar.
Adaptor profile: NW 7.2 and NW 7.4.
Operating pressure: 2 to 12 bar.
Max. operating pressure: 16 bar.
Temperature range: -15°C to +70°C.

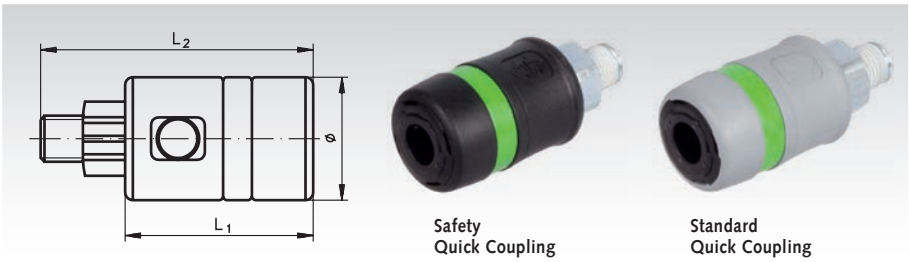

Safety Quick Coupling

Standard Quick Coupling

Ordering details: e.g.: Prod.-No., Type, Size

Product No. Safety Quick Coupling	Product No. Standard Quick Coupling	Connection	L_1 mm	Ø mm	L_2 mm	Weight Safety Quick Coupling in g	Weight Standard Quick Coupling in g
870 403 14	**870 413 14**	G 1/4	49	32	71	89	87
870 403 38	**870 413 38**	G 3/8	49	32	72	87	86
870 403 12	**870 413 12**	G 1/2	49	32	75	114	114

Standard and Safety Quick-Release Couplings with Hose Connection

Material: Composite material.

Air-flow-Ø: 7.2/7.4 mm.
Air flow: 1470 l/min ΔP: 0.6 bar.
1920 l/min ΔP: 1 bar.
Adaptor profile: NW 7.2 and NW 7.4.
Operating pressure: 2 to 12 bar.
Max. operating pressure: 16 bar.
Temperature range: -15°C to +70°C.

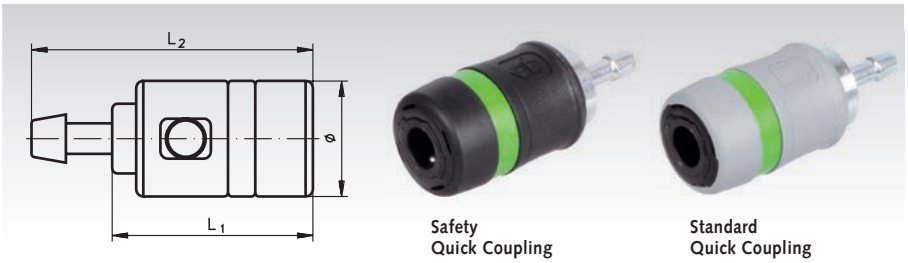

Safety Quick Coupling

Standard Quick Coupling

Product No. Safety Quick Coupling	Product No. Standard Quick Coupling	Connection mm	L_1 mm	Ø mm	L_2 mm	Weight fv Quick Coupling in g	Weight Standard Quick Coupling in g
870 406 01	**870 416 01**	6 - 7	49	32	78	80	78
870 406 03	**870 416 03**	8	49	32	78	81	80
870 406 05	**870 416 05**	9	49	32	78	80	79
870 406 07	**870 416 07**	9 - 10	49	32	78	83	82
870 406 09	**870 416 09**	13	49	32	83	92	92

Adaptors for Standard and Safety Quick-Release Couplings

Adaptors with Internal Thread for Standard and Safety Quick-Release Couplings

Material: Carbonated steel, with corrosion- proof treatment.

Internal diameter: 7.2 mm/7.4 mm.
Operating pressure: 2 - 12 bar.
Max. operating pressure: 16 bar.
Precision: constant dimensions.
Hardness: wear resitant.

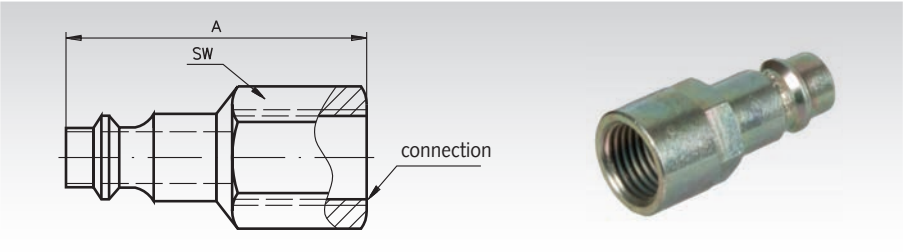

Ordering details: e.g.: Prod.-No., Type, Size

Product No.	Connection	A mm	SW mm	Weight g
870 330 14	G 1/4	40	20	21
870 330 38	G 3/8	42	21	39
870 330 12	G 1/2	46	25	56

Adaptors with External Thread for Standard and Safety Quick-Release Couplings

Material: Carbonated steel, with corrosion- proof treatment.

Internal diameter: 7.2 mm/7.4 mm.
Operating pressure: 2 - 12 bar.
Max. operating pressure: 16 bar.
Precision: constant dimensions.
Hardness: wear resitant.

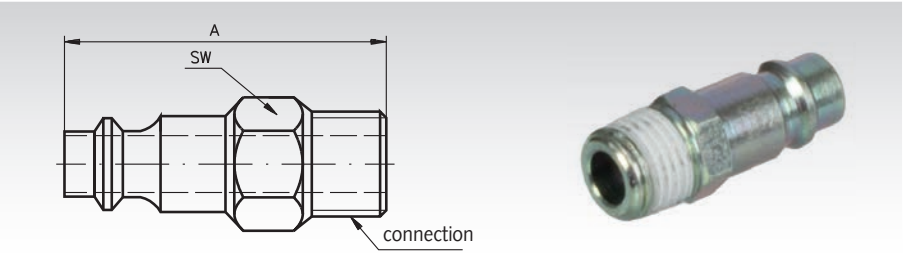

Ordering details: e.g.: Prod.-No., Type, Size

Product No.	Connection	A mm	SW mm	Weight g
870 332 14	G 1/4	35	15	19
870 332 38	G 3/8	41	17	31
870 332 12	G 1/2	49	22	62

Adaptors with Hose Connector for Standard and Safety Quick-Release Couplings

Material: Carbonated steel, with corrosion- proof treatment.

Internal diameter: 7.2 mm/7.4 mm.
Operating pressure: 2 - 12 bar.
Max. operating pressure: 16 bar.
Precision: constant dimensions.
Hardness: wear resitant.

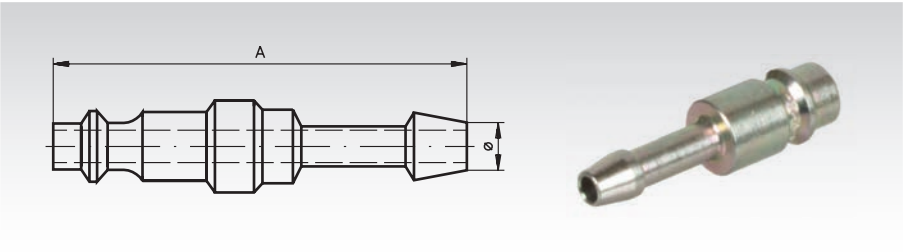

Ordering details: e.g.: Prod.-No., Type, Size

Product No.	Connection Ø mm	A mm	Weight g
870 346 00	6	45	14
870 348 00	8	46	17
870 349 00	9	54	25
870 350 00	10	46	19
870 353 00	13	52	26

www.maedler.de

...the entire MÄDLER® range with CAD files on the Internet

We present the entire ***MÄDLER***® range with CAD files and ***MÄDLER***® info, continuously updated, on the internet. Fast access to the data, fast ordering by internet.
Orders by internet, phone, fax or e-mail: We guarantee delivery at short notice.





Dimensions and other information in this catalogue display the current state of technology. We reserve the right for changes.
This catalogue was created with due diligence, but errors might still occur. We refuse to accept any claims in this respect. We reserve the right to alter dimensions, and to change or remove single products and product groups without prior notice. Our general conditions of sales, delivery and payment can be found on the last page of this catalogue.

...we keep things moving

Gearboxes and Geared Motors Overview



Type		i	Md in Nm
	Helical Gearboxes Type BT/I with Two Shaft Ends, 2-stage	2,11 - 53,79	24,2 - 700
	Page 657		
	Shaft Mounted Flat Gearboxes Type BOC/I, 2-Stage	3,34 - 65,70	105 - 900
	Page 662		
	Bevel Gearboxes Type HUG	1 : 1	0,11 - 0,68
	Page 666		
	Angular Drives with Bevel Gears from Acetal or Polyketone on Metal Plate	1 : 1	0,83 - 4,40
	Page 666		
	Bevel Gearboxes Type KEK	1 : 1	0,05 - 10
	Page 667		
	Bevel Gearboxes Type DZA Versions A und B	1 : 1 - 2 : 1	1,2 - 60
	Page 668		
	Bevel Gearboxes Type DZR (stainless) Versions A und B	1 : 1 - 2 : 1	1,1 - 42
	Page 670		
	Bevel Gearboxes Type DZA model H	1 : 1 - 2 : 1 - 3 : 1	8 - 38
	Page 672		
	Bevel Gearboxes Type KU/I Models K and L	1 : 1 - 6 : 1	15 - 600
	Page 673		

Type		i	Md in Nm
	Bevel Gearboxes Type KU/I Model H	1 : 1 - 6 : 1	15 - 600
	Page 678		
	Worm Gear Units Type G/II	5 : 1 - 75 : 1	7 - 14
	Page 680		
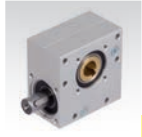	Worm Gear Units KES	13 : 1 - 65 : 1	4,5 - 18
	Page 681		
	Worm Gear Units Type H/I	7,5 : 1 - 100 : 1	12 - 187
	Page 682		
	Worm Gear Units Type ZM/I, Version A and Version HL	4,83 : 1 - 82 : 1	37 - 840
	Page 685		
	Ready to install Linear Actuators, 230V AC/50Hz and 24V DC	Lifting Power 133 N to 6000 N	
	Page 758		
	Linear drives 24 V DC	Lifting Power 400 N to 1200 N	
	Page 760		
	Worm Gear Screw Jacks Type NP/I Version A, B, C	Lifting Power 2500 N to 50000 N	
	Page 761		
	Connecting Shafts universal use		15 - 530
	Page 766		

Type		P	n_2 min^{-1}	Md_2 Nm
	Standard Three-Phase Motors Type SM/I, 230/400V, 50 Hz	0,18 kw - 7,5 kW	750 - 3000	2 - 2,8
	Page 692			
	Control Units for DC Drives			
	Page 696			
	Frequency converters	- 2,2 kW		
	Page 698			
	Small Geared Motors Type CRO, 230 V, 50 Hz	3,7 W	0,25 - 60	0,1 - 2,0
	Page 700			
	Small Geared Motors Type GE/I 12 V DC 24 V DC 230 V AC	6,7 W	0,26 - 173,3	0,28 - 2,4
	Page 702			
	Small Helical Geared Motors Type SF 24 V DC	0,31 W - 5,55 W	2 - 610	0,1 - 2
	Page 704			
	Small Worm Geared Motors Type SFS 12 - 24 V DC	2,1 W - 56 W	7,4 - 543	1 - 5
	Page 705			
	Small Worm Geared Motors Type SG and SGH 12 - 24 V DC	28 W - 54 W	44 - 1000	0,4 - 2,3
	Page 707			
	Planetary Small Geared Motors Type PE 24 V DC	2,1 W - 49 W	22 - 600	0,46 - 6
	Page 709			
	Small Geared Motors Type SE 12 V DC 24 V DC	7,8 W - 57 W	79 - 833	0,2 - 3,2
	Page 711			
	Helical Geared Motors Type HR/I 230/400 V, 50 Hz	0,09 kW - 1,5 kW	5,8 - 407	9 - 603
	Page 714			
	Helical Geared Motors Type NR/I 230/400 V, 50 Hz	0,12 kW - 1,5 kW	3.2 - 417	3 - 668
	Page 719			

Type		P	n_2 min^{-1}	Md_2 Nm
	Worm Geared Motors Type MEK and MEG 230/400 V, 50 Hz	45 W - 250 W	14 - 560	1,3 - 14
	Page 723			
	Worm Geared Motors Type MH with Hollow Shaft 230/400 V, 50 Hz	180 W - 250 W	19 - 560	3,6 - 14
	Page 725			
	Worm Helical Geared Motors Type SRM 230/400V, 50 Hz	90 W - 120 W	2,8 - 224	4,3 - 25
	Page 726			
	Worm Geared Motors Type R 230/400V, 50 Hz	180 W - 250 W	18 - 207	6,8 - 30
	Page 727			
	Worm Geared Motors Type RH with Hollow Shaft 230/400V, 50 Hz	180 W - 250 W	18 - 207	6,8 - 30
	Page 728			
	Worm Helical Geared Motors Type SRS 230/400V, 50 Hz	90 W - 120 W	2,4 - 190	5,1 - 10
	Page 729			
	Worm Geared Motors Type MZ 230/400V, 50 Hz	90 W - 120 W	0,9 - 224	3,7 - 10
	Page 730			
	Worm Geared Motors Type RL RM and RS 230/400V, 50 Hz	90 W - 250 W	0,6 - 224	3,7 - 60
	Page 731			
	Worm Geared Motors Type HMD/I 230/400V, 50 Hz	0,09 kW - 1,5 kW	9 - 200	3 - 351
	Page 734			
	Worm Geared Motors Type HMD/II 230/400V, 50 Hz	0,09 kW - 1,50 kW	9 - 200	3 - 351
	Page 739			
	Worm Geared Motors Type ZMD/I 230/400V, 50 Hz	0,12 kW - 1,5 kW	13,4 - 380,7	15 - 333
	Page 744			
	Continuously Variable Geared Motors Type MUN/I 230/400V, 50 Hz	0,18 kW	0,17 - 4200	0,27 - 70
	Page 753			

Operating and maintenance instructions

on the internet at www.maedler.de

in the Section Downloads



On our website you can find operating and maintenance instructions in various languages for all our technically-sophisticated products. We are continuously extending this list of instructions.

Instructions available:	Language		
Bevel Gearboxes DZA, DZR	German	English	French
Bevel Gearboxes KES	German	English	
Bevel Gearboxes KU/I, KUM	German	English	French
Chain Tensioners SPANNBOX®, SPANNBOY®	Deutsch	English	
Continuously Variable Geared Motors MUN/I	German	English	
Couplings DXA	German	English	
Couplings RN, RNG, RNH, RNI, RNK, RNT	German	English	
Couplings BOS II / BOZ / BW	German	English	French
Electronic Drip Oilers ELO	German	English	
Frequency Converters FU6	German		
Frequency Converters RoFre 897	German		
Helical Gear Boxes BT/I	German	English	
Helical Geared Motors HR/I	German	English	
Helical Geared Motors NR/I	German	English	French
Linear Drives (Actuator Systems) GR/I	German	English	
Motor Controllers SFRG 05	German		
Motor Controllers SFRG 3	German		
Multi-Plate Friction Clutches PD	German	English	
Precision Worm Gear Sets	German		
Safety Clutches CM	German		
Safety Clutches SI	German	English	French
Shaft Mounted Gearboxes BOC/I	German	English	
Sliding Hubs FA	German		
Sliding Hubs FS	German	English	
Sliding Hubs ROBA®	German		
Sliding Hubs with Coupling RNR	German		
Slip Clutches KF	German	English	
Slip Clutches R2, R6	German		
Standard Three-Phase-Motors SM/I	German		
Taper Bushes	German	English	French
Telescopic Slides Accuride®	German	English	French
Worm Geared Motors HMD I / HMD II	German	English	French
Worm-Geared Motors MEG / MEK / MH / MZ	German	English	French
Worm-Geared Motors R / RH / RL / RM / RS	German	English	French
Worm-Geared Motors SRM / SRS	German	English	French
Worm-Geared Motors ZMD	German	English	French
Worm Gear Screw Jacks NP/I	German	English	French
Worm Gear Units G/II	German	English	French
Worm Gear Units H/I	German	English	
Worm Gear Units KES	German	English	
Worm Gear Units ZM	German	English	French

Helical Gear Boxes BT/I with Two Shaft Ends

Casing: Cast iron casing with thick walls and ribbed construction, sealed against oil leaks and dust.

Gears: Special steel, extremely hard wearing and case hardened. Smooth-running helical gear wheels with ground or scraped tooth profiles.

Bearing: Generously dimensioned bearings as standard version (heavy-duty bearings for higher overhung or thrust loads available at extra cost).

Lubrication: The gear boxes are delivered ready for work, filled with the correct level of oil or grease, which offers sufficient lubrication for about 10,000 operation hours, or for an operation period of max. 2 years, at a temperature of -30 to +80°C.

Before start up, the plastic plug must be taken out of the venting screw, otherwise excess pressure will build up inside the gearbox.

Ordering details: e.g.: Type, Size, Ratio, Model, Product No.



Size 1

Product No.	Ratio i	at f_B = 1 Mn_2 Nm	at n_1 = 1380 min^{-1}* n_2 min^{-1}	P kW	Permissible n_1* min^{-1}	Weight kg
400 100 01	2,90	24,2	476	1,27	4000	6,5
400 100 02	3,10	25,9	445	1,27	4000	6,5
400 100 03	3,31	27,6	417	1,27	4000	6,5
400 100 04	3,55	29,6	389	1,27	4000	6,5
400 100 05	3,81	31,8	362	1,27	4000	6,5
400 100 06	4,10	34,2	337	1,27	4000	6,5
400 100 07	4,43	37	311	1,27	4000	6,5
400 100 08	4,81	40,2	287	1,27	4000	6,5
400 100 09	5,23	43,7	264	1,27	4000	6,5
400 100 10	5,73	48	241	1,27	4000	6,5
400 100 11	6,30	50	219	1,21	4000	6,5
400 100 12	6,98	50	198	1,05	4000	6,5
400 100 13	7,79	33,3	177	0,65	4000	6,5
400 100 14	8,31	35,5	166	0,65	4000	6,5
400 100 15	8,89	38	155	0,65	4000	6,5
400 100 16	9,52	40,7	145	0,65	4000	6,5
400 100 17	10,23	43,7	135	0,65	4000	6,5
400 100 18	11,02	47,1	125	0,65	4000	6,5
400 100 19	11,90	50	116	0,64	4000	6,5
400 100 20	12,91	50	107	0,59	4000	6,5
400 100 21	14,06	50	98	0,54	4000	6,5
400 100 22	15,38	50	90	0,49	4000	6,5
400 100 23	16,93	50	82	0,45	4000	6,5
400 100 24	18,75	50	74	0,41	4000	6,5
400 100 25	21,11	40	65	0,29	4000	6,5
400 100 26	22,52	43	61	0,29	4000	6,5
400 100 27	24,08	46	57	0,29	4000	6,5
400 100 28	25,80	50	53	0,29	4000	6,5
400 100 29	27,71	50	50	0,27	4000	6,5
400 100 30	29,85	50	46	0,25	4000	6,5
400 100 31	32,25	50	43	0,24	4000	6,5
400 100 32	34,97	50	39	0,22	4000	6,5
400 100 33	38,09	50	36	0,20	4000	6,5
400 100 34	41,68	50	33	0,18	4000	6,5
400 100 35	45,87	50	30	0,17	4000	6,5
400 100 36	50,82	50	27	0,15	4000	6,5

* Lower and higher inputs than the given speeds n_1 are possible. Please enquire before application.
Dimensions tables see page 661.

Connecting Shafts Page 766



Size 2

Product No.	Ratio i	at f_B = 1 Mn_2 Nm	at n_1 = 1380 min^{-1}* n_2 min^{-1}	P kW	Permissible n_1* min^{-1}	Weight kg
400 110 01	2,39	68	579	3	4000	8
400 110 03	2,59	74	534	3	4000	8
400 110 04	2,81	80	491	3	4000	8
400 110 05	3,07	87	450	3	4000	8
400 110 06	3,36	96	411	3	4000	8
400 110 07	3,70	100	373	3	4000	8
400 110 08	4,03	100	343	3	4000	8
400 110 09	4,43	100	312	3	4000	8
400 110 10	4,90	100	282	3	4000	8
400 110 11	5,46	100	253	2,79	4000	8
400 110 12	6,13	100	225	2,48	4000	8
400 110 13	7,04	98	196	2,12	4000	8
400 110 14	7,68	100	180	1,98	4000	8
400 110 15	8,41	100	164	1,81	4000	8
400 110 16	9,26	100	149	1,64	4000	8
400 110 17	10,24	100	135	1,49	4000	8
400 110 18	11,40	100	121	1,33	4000	8
400 110 19	12,80	100	108	1,19	4000	8
400 110 20	13,57	98	102	1,10	4000	8
400 110 21	14,80	100	93	1,03	4000	8
400 110 23	16,21	100	83	0,94	4000	8
400 110 24	17,84	100	77	0,85	4000	8
400 110 25	19,73	100	71	0,77	4000	8
400 110 26	21,00	93	66	0,67	4000	8
400 110 27	22,76	96	61	0,64	4000	8
400 110 28	24,75	98	56	0,60	4000	8
400 110 29	27,00	100	51	0,56	4000	8
400 110 30	29,57	100	47	0,51	4000	8
400 110 31	32,54	100	42	0,47	4000	8
400 110 32	36,00	100	38	0,42	4000	8
400 110 33	40,09	100	34	0,38	4000	8
400 110 34	45,00	100	31	0,34	4000	8
400 110 35	51,00	100	27	0,30	4000	8

Size 3

Product No.	Ratio i	at f_B = 1 Mn_2 Nm	at n_1 = 1380 min^{-1}* n_2 min^{-1}	P kW	Permissible n_1* min^{-1}	Weight kg
400 120 01	2,13	117	648	8,36	4000	13
400 120 03	2,51	138	550	8,37	4000	13
400 120 06	2,99	165	462	8,40	4000	13
400 120 08	3,62	200	382	8,41	4000	13
400 120 10	4,01	200	344	7,59	4000	13
400 120 12	5,03	200	275	6,05	4000	13
400 120 14	6,04	184	229	4,64	4000	13
400 120 15	6,69	200	206	4,55	4000	13
400 120 16	7,47	200	185	4,07	4000	13
400 120 17	8,40	200	164	3,62	4000	13
400 120 18	9,53	200	145	3,19	4000	13
400 120 19	9,62	183	143	2,89	4000	13
400 120 20	10,56	200	131	2,88	4000	13
400 120 21	11,64	200	119	2,61	4000	13
400 120 22	12,91	200	107	2,36	4000	13
400 120 23	14,40	200	96	2,11	4000	13
400 120 24	16,19	200	85	1,88	4000	13
400 120 25	18,38	200	75	1,65	4000	13
400 120 26	19,60	200	70	1,55	4000	13
400 120 27	21,61	200	64	1,41	4000	13
400 120 28	23,96	200	58	1,27	4000	13
400 120 29	26,73	200	52	1,14	4000	13
400 120 30	28,15	200	49	1,08	4000	13
400 120 31	30,90	200	45	0,98	4000	13
400 120 32	34,07	200	41	0,89	4000	13
400 120 33	37,77	200	37	0,81	4000	13
400 120 34	42,14	200	33	0,72	4000	13
400 120 35	47,38	200	29	0,64	4000	13
400 120 36	53,79	200	26	0,57	4000	13

* Lower and higher inputs than the given speeds n_1 are possible. Please enquire before application.
Dimensions tables see page 661.

Size 4

Product No.	Ratio i	at f_B = 1 Mn_2 Nm	at n_1 = 1400 min^{-1}* n_2 min^{-1}	P kW	Permissible n_1* min^{-1}	Weight kg
400 130 01	2,22	147	632	10,20	4000	21
400 130 03	2,40	159	584	10,20	4000	21
400 130 05	2,83	188	495	10,30	4000	21
400 130 07	3,38	225	414	10,30	4000	21
400 130 09	4,12	274	340	10,30	4000	21
400 130 10	4,59	300	305	10,10	4000	21
400 130 11	5,16	300	272	8,98	4000	21
400 130 12	5,29	226	265	6,60	4000	21
400 130 13	5,89	252	238	6,60	4000	21
400 130 14	6,62	283	212	6,60	4000	21
400 130 15	6,82	181	205	4,10	4000	21
400 130 17	8,10	215	173	4,10	4000	21
400 130 18	8,87	236	158	4,11	4000	21
400 130 19	9,77	260	143	4,11	4000	21
400 130 20	10,81	287	130	4,10	4000	21
400 130 21	12,04	300	116	3,84	4000	21
400 130 22	13,52	300	104	3,42	4000	21
400 130 23	14,19	202	99	2,20	4000	21
400 130 24	15,39	219	91	2,20	4000	21
400 130 25	16,75	239	84	2,20	4000	21
400 130 26	18,28	261	77	2,20	4000	21
400 130 27	20,03	286	70	2,20	4000	21
400 130 28	22,05	300	64	2,10	4000	21
400 130 29	24,40	300	57	1,90	4000	21
400 130 30	27,19	300	52	1,70	4000	21
400 130 31	30,53	300	46	1,52	4000	21
400 130 32	33,42	300	42	1,39	4000	21
400 130 33	36,99	300	38	1,25	4000	21
400 130 34	41,21	300	34	1,12	4000	21
400 130 35	46,28	300	30	1,00	4000	21

Size 5

Product No.	Ratio i	at f_B = 1 Mn_2 Nm	at n_1 = 1400 min^{-1}* n_2 min^{-1}	P kW	Permissible n_1* min^{-1}	Weight kg
400 140 01	2,11	140	665	10,30	4000	28
400 140 03	2,29	152	611	10,20	4000	28
400 140 05	2,50	166	560	10,20	4000	28
400 140 07	2,74	182	512	10,30	4000	28
400 140 08	3,01	200	466	10,30	4000	28
400 140 10	3,32	221	422	10,30	4000	28
400 140 11	3,68	245	380	10,30	4000	28
400 140 12	4,11	274	340	10,30	4000	28
400 140 13	4,63	308	302	10,30	4000	28
400 140 14	5,26	350	266	10,30	4000	28
400 140 15	5,94	254	236	6,60	4000	28
400 140 16	6,75	289	207	6,61	4000	28
400 140 17	7,18	191	195	4,11	4000	28
400 140 18	7,89	210	178	4,11	4000	28
400 140 19	8,70	231	161	4,10	4000	28
400 140 20	9,66	257	145	4,11	4000	28
400 140 21	10,79	287	130	4,10	4000	28
400 140 22	12,14	323	115	4,10	4000	28
400 140 23	13,80	367	101	4,10	4000	28
400 140 24	14,80	211	95	2,20	4000	28
400 140 25	16,20	231	86	2,20	4000	28
400 140 26	17,80	254	79	2,20	4000	28
400 140 27	19,65	280	71	2,20	4000	28
400 140 28	21,81	311	64	2,20	4000	28
400 140 29	24,36	347	58	2,20	4000	28
400 140 30	27,42	391	51	2,20	4000	28
400 140 31	31,15	444	45	2,20	4000	28
400 140 32	33,06	314	42	1,47	4000	28
400 140 33	36,92	351	38	1,47	4000	28
400 140 34	41,56	395	34	1,47	4000	28
400 140 35	47,22	450	30	1,47	4000	28

* Lower and higher inputs than the given speeds n_1 are possible. Please enquire before application.

Dimensions tables see page 661.

Size 6

Product No.	Ratio i	at f_B = 1 Mn_2 Nm	at n_1 = 1420 min^{-1}* n_2 min^{-1}	P kW	Permissible n_1* min^{-1}	Weight kg
400 150 01	2,38	294	597	19,30	4000	32
400 150 03	2,82	349	503	19,30	4000	32
400 150 05	3,40	420	418	19,30	4000	32
400 150 07	3,75	463	379	19,30	4000	32
400 150 09	4,65	574	306	19,30	4000	32
400 150 11	5,63	405	252	11,20	4000	32
400 150 12	6,22	447	228	11,20	4000	32
400 150 13	6,9	496	206	11,20	4000	32
400 150 14	7,71	554	184	11,20	4000	32
400 150 15	8,68	623	164	11,20	4000	32
400 150 16	9,86	700	144	11,10	4000	32
400 150 17	10,90	566	130	8,10	4000	32
400 150 18	12,18	632	117	8,10	4000	32
400 150 19	13,71	700	104	8,00	4000	32
400 150 20	15,58	700	91	7,00	4000	32
400 150 21	16,43	667	86	6,35	4000	32
400 150 22	18,13	683	78	5,89	4000	32
400 150 24	20,13	700	71	5,44	4000	32
400 150 25	22,48	700	63	4,87	4000	32
400 150 26	25,30	700	56	4,33	4000	32
400 150 27	28,00	700	51	3,91	4000	32
400 150 28	31,27	700	45	3,50	4000	32
400 150 29	35,20	700	40	3,11	4000	32
400 150 30	37,92	700	38	2,89	4000	32
400 150 31	42,68	700	33	2,57	4000	32
400 150 32	48,50	700	29	2,26	4000	32

Size 7

Product No.	Ratio i	at f_B = 1 Mn_2 Nm	at n_1 = 1420 min^{-1}* n_2 min^{-1}	P kW	Permissible n_1* min^{-1}	Weight kg
400 160 01	2,38	294	597	19,30	4000	34
400 160 03	2,82	349	503	19,30	4000	34
400 160 05	3,40	420	418	19,30	4000	34
400 160 07	3,75	463	379	19,30	4000	34
400 160 09	4,65	574	306	19,30	4000	34
400 160 11	5,63	405	252	11,20	4000	34
400 160 12	6,22	447	228	11,20	4000	34
400 160 13	6,90	496	206	11,20	4000	34
400 160 14	7,71	554	184	11,20	4000	34
400 160 15	8,68	623	164	11,20	4000	34
400 160 16	9,86	700	144	11,10	4000	34
400 160 17	10,90	566	130	8,10	4000	34
400 160 18	12,18	632	117	8,10	4000	34
400 160 19	13,71	700	104	8,00	4000	34
400 160 20	15,58	700	91	7,00	4000	34
400 160 21	16,43	667	86	6,35	4000	34
400 160 22	18,13	683	78	5,89	4000	34
400 160 24	20,13	700	71	5,44	4000	34
400 160 25	22,48	700	63	4,87	4000	34
400 160 26	25,30	700	56	4,33	4000	34
400 160 27	28,00	700	51	3,91	4000	34
400 160 28	31,27	700	45	3,50	4000	34
400 160 29	35,20	700	40	3,11	4000	34
400 160 30	37,92	700	38	2,89	4000	34

* Lower and higher inputs than the given speeds n_1 are possible. Please enquire before application.
Dimensions tables see page 661.

Dimension Table for Helical Gearboxes BT/I With Two Shaft Ends

Foot Mounting Model B 3

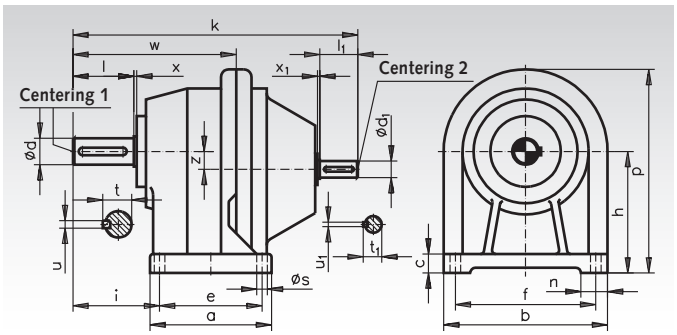

Flange Mounting Model B 5

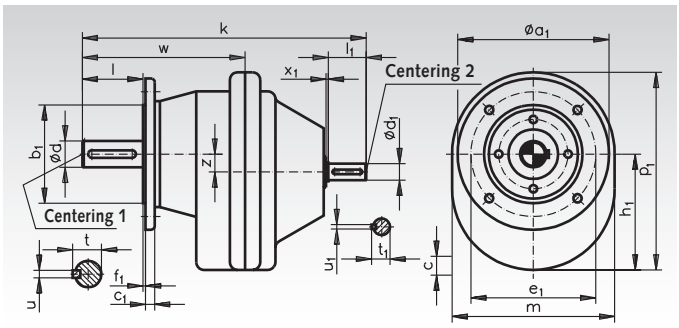

The shaft ends Ø d are machined according to ISO k6.
Feather keys according to DIN 6885.

Selection of available flanges: Mountings according to DIN 42948. Up to 300 mm diameter a_1 the recess Ø b_1 of the output flanges is manufactured according to ISO j6, over 300mm according to ISO h6.

Size				Ø a_1	Ø b_1	c_1	Ø e_1	f_1	s_1
			1	120	80	10	100	3	4 x Ø 7
		3	**2**	140	95	10	115	3	4 x Ø 9
	4	**3**	**2**	160	110	10	130	3,5	4 x Ø 9
5	**4**	**3**	**2**	200	130	12	165	3,5	4 x Ø11
6	**4**	**3**		250	180	16	215	4	4 x Ø14
7				300	230	20	265	4	4 x Ø14

Size	a	b	c	Ø d x l	Ø d_1 x l_1	e	f	h	h_1	i	k	m	n	p	p_1	Ø s	t	t_1	u	u_1	w	x	x_1	z	Centering 1	Centering 2
	mm	mm	mm	mm	mm	mm	mm	mm	mm	mm	mm	mm	mm	mm	mm	mm	mm	mm	mm	mm	mm	mm	mm	mm	DIN 332/2	
1	78	130	12	16x40	11x23	50	110	86	84	52	210	120	20	146	144	9	18	12,5	5	4	120	2	2	0	M5	M4
2	110	135	14	20x40	14x30	85	105	102	101	67,5	232	135	30	170	169	9	22,5	16	6	5	129	2	2	0	M6	M5
3	124	154	16	25x60	16x40	100	130	125	123	97	289	154	24	202	200	11	28	18	8	5	169	3	2	0	M10	M5
4	175	190	20	30x70	22x50	140	155	130	128	115	370	170	35	215	213	14	33	24,5	8	6	208	3	2	0	M10	M8
5	160	215	25	35x80	22x50	135	185	160	153	114	375	215	35	268	261	14	38	24,5	10	6	215	4	2	23,5	M12	M8
6	164	215	25	40x80	25x60	134	175	175	173	120	386	215	40	283	281	14	43	28	12	8	224	4	2	0	M16	M10
7	164	215	25	50x100	25x60	134	175	175	173	140	406	215	40	283	281	14	53,5	28	14	8	244	4	2	0	M16	M10

Permissible Radial and Axial Loads of the Output Shaft

Size		Output Speeds n_2 [min^{-1}]						
		16	25	36	50	80	125	≥ 130
1	F_R [N]	600	500	450	400	350	300	250
1	F_A [N]	450	400	350	320	300	250	200
2	F_R [N]	1250	1100	1000	900	800	700	600
2	F_A [N]	500	450	400	360	320	280	250
3	F_R [N]	2000	1800	1700	1600	1500	1300	1200
3	F_A [N]	800	720	680	640	600	520	480
4	F_R [N]	3000	2700	2500	2300	2100	1700	1500
4	F_A [N]	1200	1080	1000	920	840	680	600
5	F_R [N]	3600	3400	3150	2900	2500	2000	1800
5	F_A [N]	1440	1370	1260	1150	1010	800	720
6	F_R [N]	4000	3800	3500	3200	2800	2200	2000
6	F_A [N]	1600	1520	1400	1280	1120	880	800
7	F_R [N]	10400	9880	9100	8320	7280	5720	5200
7	F_A [N]	4160	3950	3640	3330	2910	2290	2080

Size 7 is as standard equipped with a stronger bearing system.

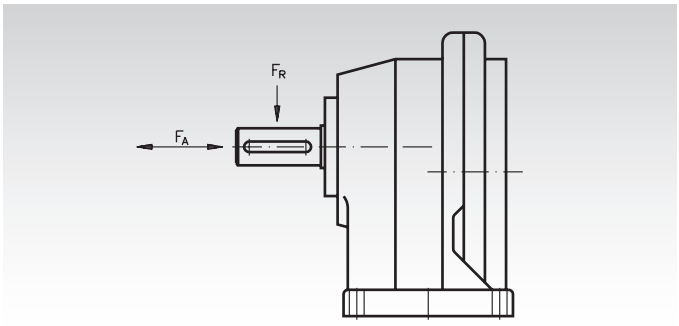

The stated values for radial load (F_R) assume that the impact of the load is in the centre of the shaft length (see drawing). If both radial and axial forces occur, the permissible radial force (F_R) indicated in the table is reduced by the value of the occurring axial force (F_A).

Gearbox Selection for Operating Factors Larger Than $f_B = 1$

In addition to the input power (P) and output speed (n_2) you also enter the respective **operating factor (f_B)** into the formula. When selecting the gearbox from the table, the table value **(M_n) must be no smaller than** the calculated figure (M_n).

$$M_{n_2} = \frac{P \times 9550}{n_2} \times f_B$$

M_{n_2} [Nm] = Output torque.
P [kW] = Input power.
n_2 [min^{-1}] = Output speed.
f_B = Operating factor.

Shaft-Mounted Flat Gearboxes BOC/I, 2-Stage

General data: Compact design for confined spaces. Ratios of i = approx. 3.5:1 to 59:1. Larger ratios on request. Input power of 0.3 to 11.2 kW.

Version A: With hollow shaft on output side = Standard.
Version B: With torque arm.
Version C: With flange on the output side.
Version D / E: With foot mounting brackets, see drawing page 665.
Version F: With single-sided solid output shaft.
(Version B - F on request).

Housing: Rigid, ribbed grey cast iron housing, thus quiet, low-vibration running characteristics. Fully sealed against oil leaks and protected against water jets.

Gears: The helical gear wheels are made from heat-treated and case-hardened steel. The gearing is hardened and precisely machined.

Bearing: Generously-dimensioned roller bearings.

Input shaft/end shield: The shaft tolerances, and the flange adapters which can be delivered on request, are suited for IEC standard motors.

Lubrication: The gear boxes are delivered ready for work, filled with the correct level of oil or grease (ambient temperature -10°C to 50°C), which offers sufficient lubrication for about 10,000 operation hours, or for an operation period of max. 2 years.

Before start up, the plastic plug must be taken out of the venting screw.



Foot mounting against extra charge.

Ordering details: e.g.: Type, Version (A-F), Mounting Position (1 - 5), Size, Ratio, Product No.

Possible Combinations

1 Shaft-mounted gearboxes to connect to flange motors, motor shaft dimensions according to factory standard.
2 Shaft-mounted geared motor.
3 Shaft-mounted gearboxes with shaft end on input side.
4 Shaft-mounted gearboxes with assembled flange to take up standard IEC-motors.
5 Shaft-mounted geared motor with overload safety clutch.
6 Shaft-mounted geared motor with break-clutch combination.
7 Shaft-mounted gearboxes with helical-geared motor.
8 Shaft-mounted gearboxes with worm-gearbox.
9 Shaft-mounted gearboxes with belt/variable-speed geared motor.
10 Shaft-mounted gearboxes with friction wheel/variable-speed geared motor.
11 Shaft-mounted gearboxes with single or double-sided fixed output shaft.
12 Shaft-mounted gearboxes with output flange.

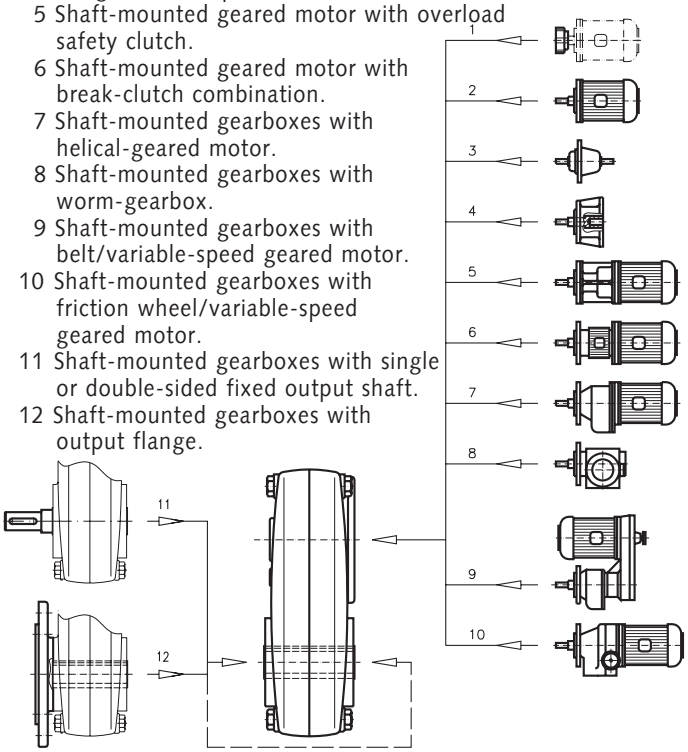

Mounting Positions

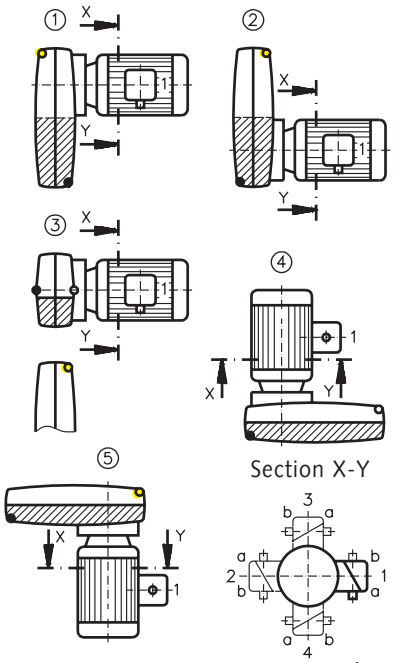

Lubricant Level
Venting Screw
Drain plug

Size 0, Version A

Product No.	Ratio i	M_{2max} Nm	at n_1 = 1380 min^{-1} and f_B = 1 n_2 min^{-1}	P_{max} kW	Weight kg
400 290 01	3,69	105	373,8	4,3	8
400 290 02	3,97	113	347,7	4,3	8
400 290 03	4,28	122	322,4	4,3	8
400 290 04	4,63	125	297,8	4,1	8
400 290 05	4,76	122	290,2	3,9	8
400 290 06	5,13	125	269	3,7	8
400 290 07	5,55	125	248,5	3,4	8
400 290 08	6,04	125	228,6	3,1	8
400 290 09	6,60	125	209,2	2,9	8
400 290 10	7,25	125	190,4	2,6	8
400 290 11	8,02	125	172,1	2,4	8
400 290 12	8,94	125	154,4	2,1	8
400 290 13	9,94	125	138,8	1,9	8
400 290 14	10,72	125	128,7	1,8	8
400 290 15	11,61	124	118,9	1,6	8
400 290 16	12,62	125	109,4	1,5	8
400 290 17	13,78	125	100,1	1,4	8
400 290 18	15,15	125	91,1	1,3	8
400 290 19	16,76	125	82,4	1,1	8
400 290 20	18,69	125	73,8	1,0	8
400 290 21	20,66	125	66,8	0,92	8
400 290 22	22,36	125	61,7	0,85	8
400 290 23	24,31	125	56,8	0,78	8
400 290 24	26,56	125	51,9	0,72	8
400 290 25	29,19	125	47,3	0,65	8
400 290 26	32,29	125	42,7	0,59	8
400 290 27	34,94	125	39,5	0,54	8
400 290 28	37,69	125	36,6	0,50	8
400 290 29	40,80	125	33,8	0,47	8
400 290 30	44,36	125	31,1	0,43	8
400 290 31	48,46	125	28,5	0,39	8
400 290 32	53,25	125	25,9	0,36	8
400 290 33	58,91	125	23,4	0,32	8
400 290 34	65,70	125	21,0	0,29	8

Size 1, Version A

Product No.	Ratio i	M_{2max} Nm	at n_1 = 1380 min^{-1} and f_B = 1 n_2 min^{-1}	P_{max} kW	Weight kg
400 300 01	3,34	184	413,6	8,4	12,5
400 300 02	3,58	197	385,2	8,4	12,5
400 300 03	3,86	213	357,7	8,4	12,5
400 300 04	4,17	230	331,2	8,4	12,5
400 300 05	4,52	250	305,5	8,4	12,5
400 300 06	4,92	250	280,6	7,7	12,5
400 300 07	5,38	250	256,5	7,1	12,5
400 300 08	5,92	250	233,1	6,4	12,5
400 300 09	6,44	196	214,2	4,6	12,5
400 300 10	6,96	212	198,3	4,6	12,5
400 300 11	7,54	229	182,9	4,6	12,5
400 300 12	8,21	250	168,0	4,6	12,5
400 300 13	8,98	250	153,6	4,2	12,5
400 300 14	9,89	250	139,6	3,8	12,5
400 300 15	10,75	204	128,4	2,9	12,5
400 300 16	11,54	219	119,6	2,9	12,5
400 300 17	12,42	236	111,1	2,9	12,5
400 300 18	13,42	250	102,8	2,8	12,5
400 300 19	14,55	250	94,8	2,6	12,5
400 300 20	15,84	250	87,1	2,4	12,5
400 300 21	17,33	250	79,6	2,2	12,5
400 300 22	19,07	250	72,4	2,0	12,5
400 300 23	19,94	227	69,2	1,7	12,5
400 300 24	21,41	244	64,4	1,7	12,5
400 300 25	23,06	250	59,8	1,6	12,5
400 300 26	24,91	250	55,4	1,5	12,5
400 300 27	27,00	250	51,1	1,4	12,5
400 300 28	29,40	250	46,9	1,3	12,5
400 300 29	32,16	250	42,9	1,2	12,5
400 300 30	35,39	250	39,0	1,1	12,5
400 300 31	36,35	250	38,0	1,0	12,5
400 300 32	39,27	250	35,1	0,97	12,5
400 300 33	42,57	250	32,4	0,89	12,5
400 300 34	46,35	250	29,8	0,82	12,5
400 300 35	50,71	250	27,2	0,75	12,5
400 300 36	55,79	250	24,7	0,68	12,5

Dimensions tables see page 665.

Size 2, Version A

Product No.	Ratio i	M_{2max} Nm	at n_1 = 1400 min^{-1} and f_B = 1 n_2 min^{-1}	P_{max} kW	Weight kg
400 320 01	3,55	236	394,8	10,3	19,5
400 320 02	3,80	253	368,3	10,3	19,5
400 320 03	4,09	272	342,6	10,3	19,5
400 320 04	4,41	293	317,6	10,3	19,5
400 320 05	4,77	317	293,4	10,3	19,5
400 320 06	5,19	345	269,9	10,3	19,5
400 320 07	5,67	377	247,0	10,3	19,5
400 320 08	6,12	262	228,8	6,6	19,5
400 320 09	6,65	284	210,4	6,6	19,5
400 320 10	7,27	311	192,6	6,6	19,5
400 320 11	7,65	203	182,9	4,1	19,5
400 320 12	8,15	217	171,8	4,1	19,5
400 320 13	8,69	231	161,0	4,1	19,5
400 320 14	9,30	247	150,6	4,1	19,5
400 320 15	9,97	265	140,5	4,1	19,5
400 320 16	10,72	285	130,7	4,1	19,5
400 320 17	11,56	307	121,1	4,1	19,5
400 320 18	12,51	333	111,9	4,1	19,5
400 320 19	13,60	362	102,9	4,1	19,5
400 320 20	14,86	395	94,2	4,1	19,5
400 320 21	16,25	232	86,1	2,2	19,5
400 320 22	17,28	246	81,0	2,2	19,5
400 320 23	18,40	262	76,1	2,2	19,5
400 320 24	19,63	280	71,3	2,2	19,5
400 320 25	20,99	299	66,7	2,2	19,5
400 320 26	22,50	321	62,2	2,2	19,5
400 320 27	24,19	345	57,9	2,2	19,5
400 320 28	26,09	372	53,7	2,2	19,5
400 320 29	28,25	400	49,6	2,2	19,5
400 320 30	30,71	400	45,6	2,0	19,5
400 320 31	33,55	400	41,7	1,8	19,5
400 320 32	34,10	324	41,0	1,5	19,5
400 320 33	36,67	348	38,2	1,5	19,5
400 320 34	39,55	376	35,4	1,5	19,5
400 320 35	42,81	400	32,7	1,4	19,5
400 320 36	46,55	400	30,1	1,3	19,5
400 320 37	50,85	400	27,5	1,2	19,5

Size 3, Version A

Product No.	Ratio i	M_{2max} Nm	at n_1 = 1420 min^{-1} and f_B = 1 n_2 min^{-1}	P_{max} kW	Weight kg
400 340 01	4,13	510	344,1	19,3	36
400 340 02	4,46	551	318,4	19,3	36
400 340 03	4,84	597	293,6	19,3	36
400 340 04	5,27	650	269,6	19,3	36
400 340 05	5,76	712	246,4	19,3	36
400 340 06	6,34	783	223,9	19,3	36
400 340 07	6,84	492	207,5	11,3	36
400 340 08	7,40	531	192,0	11,2	36
400 340 09	8,02	576	177,0	11,2	36
400 340 10	8,73	627	162,6	11,2	36
400 340 11	9,56	686	148,6	11,2	36
400 340 12	10,52	755	135,0	11,2	36
400 340 13	10,81	561	131,3	8,1	36
400 340 14	11,68	606	121,5	8,1	36
400 340 15	12,67	657	112,1	8,1	36
400 340 16	13,80	716	102,9	8,1	36
400 340 17	15,10	783	94,1	8,1	36
400 340 18	16,62	862	85,5	8,1	36
400 340 19	18,53	900	76,6	7,6	36
400 340 20	19,96	900	71,2	7,1	36
400 340 21	21,56	900	65,9	6,5	36
400 340 22	23,38	900	60,7	6,0	36
400 340 23	25,46	900	55,8	5,5	36
400 340 24	27,87	900	51,0	5,1	36
400 340 25	30,00	900	47,3	4,7	36
400 340 26	32,53	900	43,6	4,3	36
400 340 27	35,43	900	40,1	4,0	36
400 340 28	38,77	900	36,6	3,6	36
400 340 29	42,67	900	33,3	3,3	36
400 340 30	47,01	900	30,2	3,0	36
400 340 31	51,73	900	27,4	2,7	36

Dimensions tables see page 665.

Dimensions Table Shaft-Mounted Flat Gearboxes BOC/I

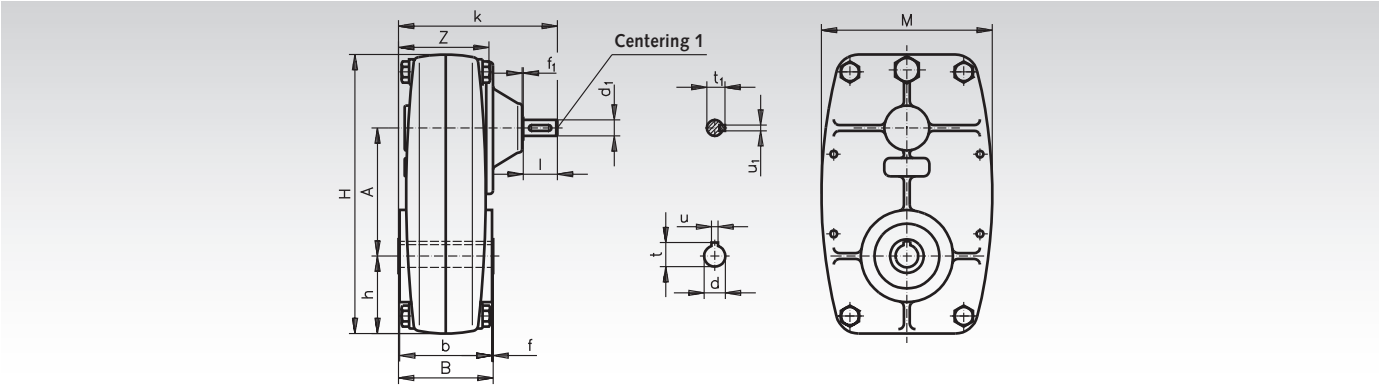

Dimensions Version A

Size	A mm	B mm	b mm	Ød mm	Ød1 mm	f mm	f1 mm	H mm	h mm	k mm	l mm	M mm	t mm	t1 mm	u mm	u1 mm	Z mm	Center. 1 DIN 332/2
0	112,5	83	81	20^{H7}	14_{k6}	1	1	245	68	139,5	30	150	22,8	16	6^{JS9}	5	75,5	M5
1	143	95	93	30^{H7}	16_{k6}	1	1	288	82	161,5	40	176	33,3	18	8^{JS9}	5	81,5	M5
2	150,5	105	103	35^{H7}	22_{k6}	1	2	330	90	206,5	50	190	38,3	24,5	10^{JS9}	6	97,5	M8
3	207	140	138	40^{H7}	25_{k6}	1	2	430	120	221,0	60	265	43,3	28	12^{JS9}	8	125,0	M10

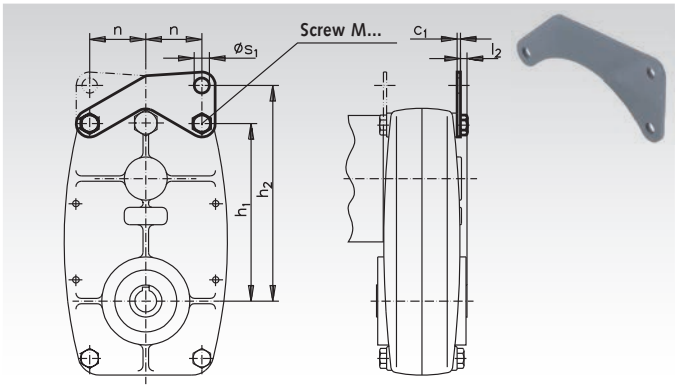

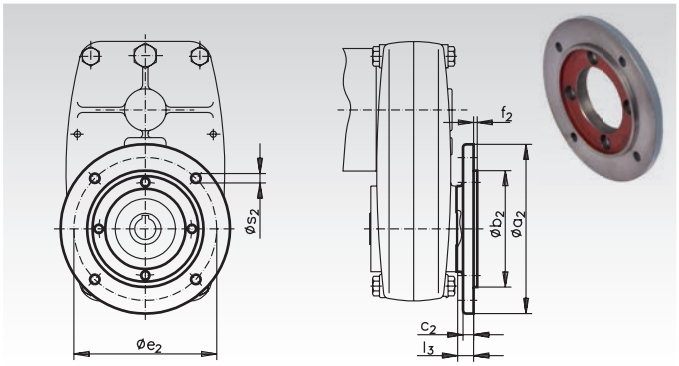

Dimensions Version B

Size	c_1 mm	h_1 mm	h_2 mm	l_2 mm	n mm	$Øs_1$ mm	Screw M
0	3	163	198	12,5	51,5	6,6	M6
1	3	187	230	12,5	58	9,0	M8
2	4	220	260	7,5	65	14,0	M10
3	5	277,5	347,5	21,0	92,5	14,0	M12

Dimensions Version C

Size	$Øa_2$ mm		$Øb_2$ mm		c_2 mm		$Øe_2$ mm		f_2 mm		l_3 mm		$Øs_2$ mm	
0	160	200	110_{j6}	130_{j6}	10	12	130	165	3,5	3,5	15	15	9	11
1	160	200	110_{j6}	130_{j6}	16	12	130	165	3,5	3,5	22	22	9	11
2	160	200	110_{j6}	130_{j6}	16	12	130	165	3,5	3,5	22	22	9	11
3	250	300	180_{j6}	230_{j6}	16	20	215	265	4,0	4,0	21	21	14	14

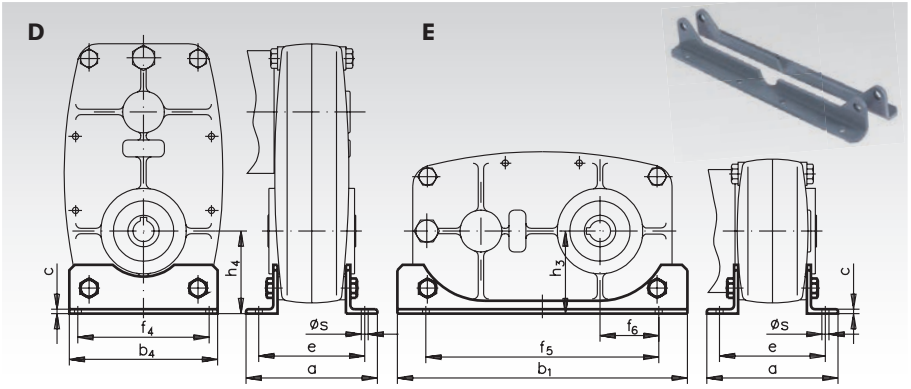

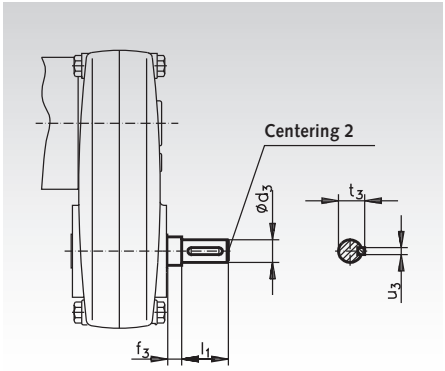

Dimensions Version D and E

Size	a mm	b_1 mm	b_4 mm	c mm	e mm	f_4 mm	f_5 mm	f_6 mm	h_3 mm	h_4 mm	Øs mm
0	92	234	140	4	78	124	194	42,5	78	78	6,6
1	124	274	170	4	100	146	220	48	92	92	9
2	162	318	190	5	132	150	270	60	101	101	11
3	168	397	265	6	138	225	325	67,5	136,5	131,5	14

Dimensions Version F

Size	$Ød_3$ mm	f_3 mm	l_1 mm	t_3 mm	u_3 mm	Center. 2 DIN 332/2
0	20_{k6}	12	40	22,5	6	M6
1	30_{k6}	15	70	33	8	M10
2	35_{k6}	14	80	38	10	M12
3	40_{k6}	16,5	80	43	12	M16

Bevel Gearboxes HUG, Ratio 1:1

General: Miniaturised right-angle drives for light duty. Suitable for manual and short term drive applications.

Housing: Gear cases are injection moulded in filled nylon 6.6 for low moisture take up, low thermal expansion, high rigidity. Electrical insulating. Shafts hardened and ground.

Gearing: straight teeth, max. backlash 2°. Speed max. 1,000min^{-1}.
Version A: with steel bevel gears, bonded onto the shafts.
Version B: with polyacetal bevel gears, moulded onto the shafts.

Ordering details: e.g.: Type, Version, Product No.

Product No.	Version	$T_{max.}$ (Ncm)	Weight (g)
410 000 00	A (steel gears)	68	41
410 001 00	B (polyacetal gears)	11	37

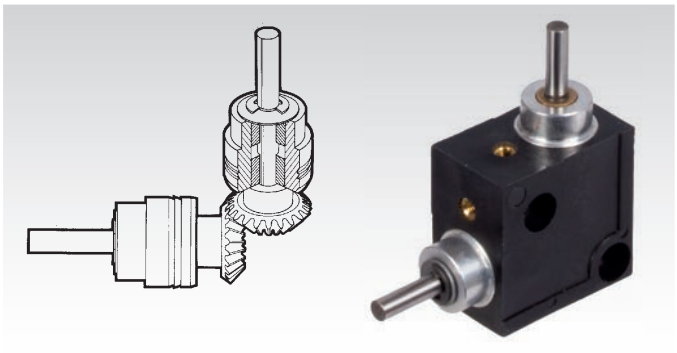

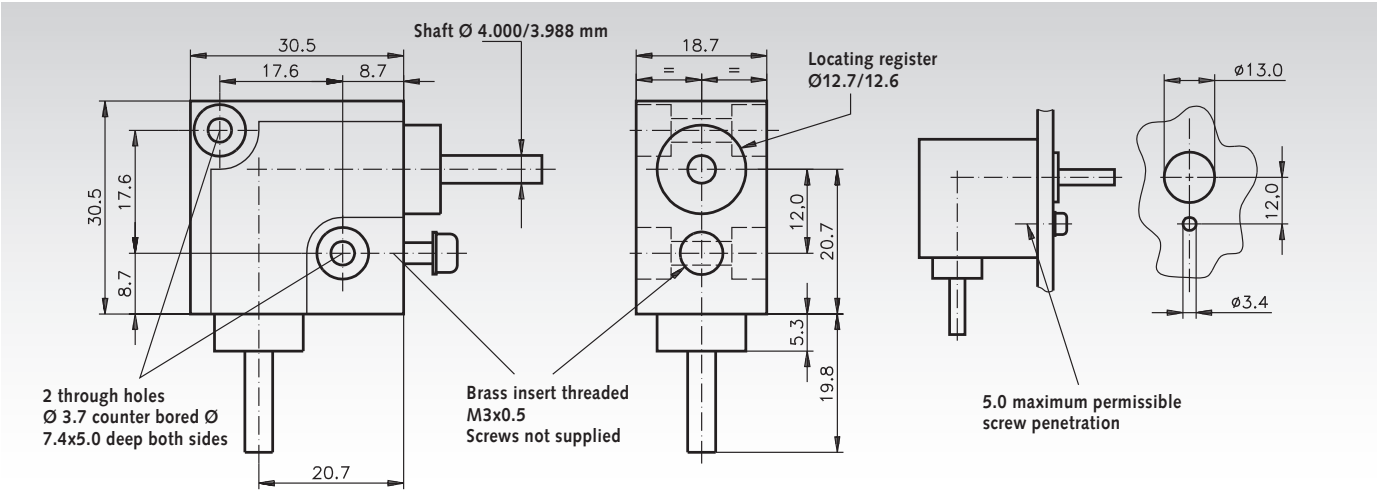

Angular Drive with Plastic Bevel Gears, Ratio 1:1

Material: Housing made from zinc die-cast ZnAl4Cu1. Shafts made from stainless steel 1.4301, dismountable. Bevel gears from polyacetal or polyketone resin, injection-moulded.

- Low cost angular gear drive, ratio 1:1, 6 sizes.
- Suitable for lower torques and intermittend use.
- Shafts running directly in the self-lubricating housing material.
- Easy to mount and maintenance-free.

Polyacetal: Standard quality with high hardness.
Polyketone: Lower friction,much larger lifespan. Much higher safety against tooth breaking. Shaft angle = 90°. Temperature range - 20°C to +100° C.

Ordering details: e.g.:
Art.-Nr. 410 355 10, Angular drive with polyacetal bevel gears, shaft-Ø d=5mm

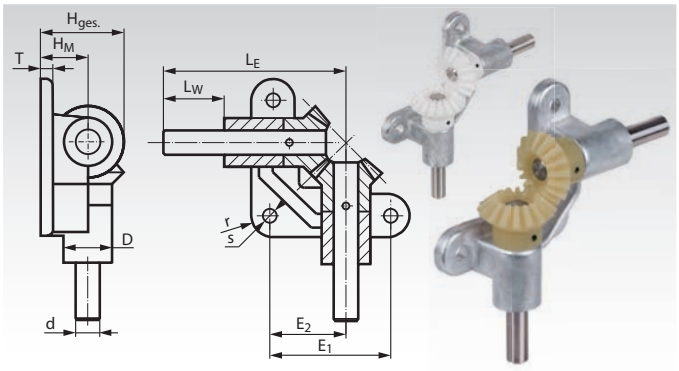

Product No. Polyacetal	Product No. Polyketone	d mm	D mm	E_1 mm	E_2 mm	H_{Ges} mm	H_M mm	L_E mm	L_W mm	r mm	s mm	T mm	Module mm	Number of teeth	$T_{max.}$* Polyacetal Ncm	$T_{max.}$* Polyketone Ncm	Weight g
410 355 10	**410 356 10**	5^{h9}	12	32	19,4	18,8	10	50	15	6	4,8	4	1,0	16/16	8,3	8,7	60
410 355 15	**410 356 15**	8^{h9}	18	45	28,4	28,2	15	70	20	9	5,8	5	1,5	16/16	29	31	180
410 355 20	**410 356 20**	10^{h6}	22	55	35,0	37,5	20	90	30	11	7,0	6	2,0	16/16	73	77	320
410 355 25	**410 356 25**	12^{h6}	25	65	41,0	46,8	25	105	35	12,5	9,0	7	2,5	16/16	145	152	480
410 355 30	**410 356 30**	15^{h6}	30	75	47,5	56,2	30	120	40	15	9,0	8	3,0	16/16	250	263	760
410 355 35	**410 356 35**	18^{h6}	33	85	54,0	65,7	35	135	45	16	11,0	9	3,5	16/16	440	462	1080

Bevel Gearboxes KEK

Angular drives with high torques at very low dimensions.
Suitable in a wide variety of applications
7 Sizes. Ratio 1:1.

Housing: Aluminium, silver anodized. Sealed against lubricant leaks, protected against dust. Can be mounted in any position.
Gearing: Bevel gears from steel, surface hardened.
Bearing: Ball bearings with rubber seal RS.
Lubrication: Maintenance free grease lubrication.
Angular backlash: 3°+/-1°.
Operating time: 20% at 5 min.
Life time: 1,000 hours at max. performance at speed 500 min^{-1} and operating time 20%.
Permiss. operating temperature: -20° to +60°C.

Ordering Details: e.g.: Product No. 410 001 01 Bevel Gearbox KEK Size 1



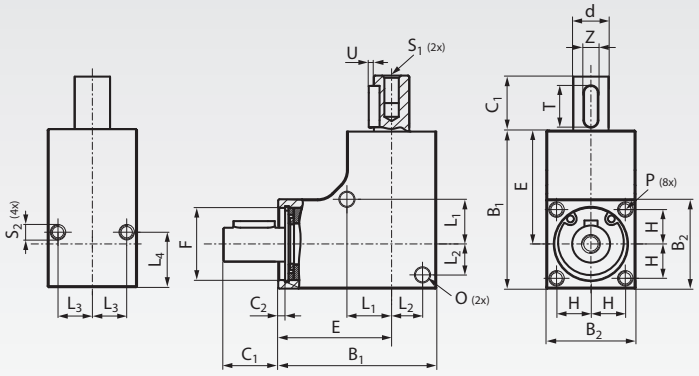

Rotational Sense (Rot. direction interchangeable)

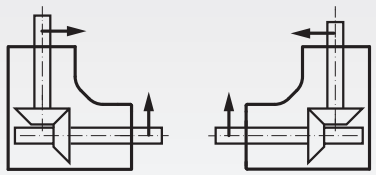

Performance Data

Product No.	Size	Shafts Ø d^{j6} mm	Ratio i	Permittable Torque at Speed 100 min^{-1} Nm	500 min^{-1} Nm	1.000 min^{-1} Nm	Permittable Power at Speed 100 min^{-1} W	500 min^{-1} W	1.000 min^{-1} W	Shaft Load F_R* N	F_A** N	Weight g
410 001 01	1	6	1 : 1	0,35	0,1	0,05	3,7	5,2	5,2	60	60	52
410 001 02	2	8	1 : 1	0,75	0,3	0,15	7,9	15,7	15,7	100	100	73
410 001 03	3	10	1 : 1	2,5	1	0,50	26,2	52,4	52,4	120	120	142
410 001 04	4	12	1 : 1	4	1,5	0,75	41,9	78,5	78,5	140	140	189
410 001 05	5	12	1 : 1	5	2	1,0	52	105	105	240	240	268
410 001 06	6	12	1 : 1	8	3	1,5	84	157	157	550	550	330
410 001 07	7	12	1 : 1	10	4	2,0	105	209	209	550	550	395

* Radial load F_R max. (on middle of the Output Shaft) for $F_A = 0$.
** Axial load F_A max. for $F_R = 0$.

Dimensiones

Size	B_1 mm	B_2 mm	C_1 mm	C_2 mm	d^{j6} mm	E mm	F mm	H mm	L_1 mm	L_2 mm	L_3 mm	L_4 mm	O mm	P mm	S_1 mm	S_2 mm	T mm	U mm	Z mm
1	32	18	12	2,1	6	23	13	6,5	8,5	6	6,5	11	3,1	M3 x 10	M3 x 8	M3 x 6	8	0,8	2
2	35	20	12	2,05	8	25	16	7,5	10	7	7,5	10	3,1	M3 x 10	M3 x 8	M3 x 6	8	0,8	2
3	42	24	16	2,0	10	30	19	9	12	8	9	16	4,1	M4 x 10	M4 x 8	M4 x 8	12	1,5	4
4	46	26	16	2,0	12	33	21	10	13	9	10	16	4,1	M4 x 10	M5 x 8	M4 x 8	12	1,5	4
5	53	30	16	2,1	12	38	24	11	15	11	11	16	4,1	M4 x 10	M5 x 8	M4 x 8	12	1,5	4
6	56	32	16	2,1	12	40	28	12	17	12	12	16	4,1	M4 x 10	M5 x 8	M4 x 8	12	1,5	4
7	60	35	16	2,1	12	42,5	30	13	17,5	13,5	13	16	4,1	M4 x 10	M5 x 8	M4 x 8	12	1,5	4

Bevel Gearboxes DZA

General data: 4 sizes and 2 versions.
Ratio either 1 : 1 or 2 : 1. Any mounting position possible.
Ratio for gearing up to max. 750 min^{-1} possible.

Housing: Thick-walled, one-piece cast aluminium housing, fully oil-tight and dust-proof.

Gearing: The gears are to the Coniflex system, case hardened.

Shafts/bearing system: Input and output shaft are ground and mounted on ball bearings. **From size 2 with keyways.**

Lubrication/maintenance: Lubricated for life, viscosity ISO VG 150. Gearboxes are maintenance free.

Angular backlash: 15 to 30 angular minutes.

Permiss. operating temperature: -18°C to +80°C.

Ordering details: e.g.: Product No., Type, Ratio, Size, Version

Product No.	Ratio	Size	Version	Shaft-Ø mm	Weight kg
410 010 00	1 : 1	1	A	8	0,30
410 020 00	1 : 1	1	B	8	0,31
410 012 00	1 : 1	2	A	15	1,25
410 022 00	1 : 1	2	B	15	1,31
410 014 00	1 : 1	3	A	20	3,75
410 024 00	1 : 1	3	B	20	3,89
410 016 00	1 : 1	4	A	25	6,20
410 026 00	1 : 1	4	B	25	6,52
410 010 02	2 : 1	1	A	8	0,30
410 020 02	2 : 1	1	B	8	0,31
410 012 02	2 : 1	2	A	15	1,25
410 022 02	2 : 1	2	B	15	1,31
410 014 02	2 : 1	3	A	20	3,75
410 024 02	2 : 1	3	B	20	3,89
410 016 02	2 : 1	4	A	25	6,20
410 026 02	2 : 1	4	B	25	6,52

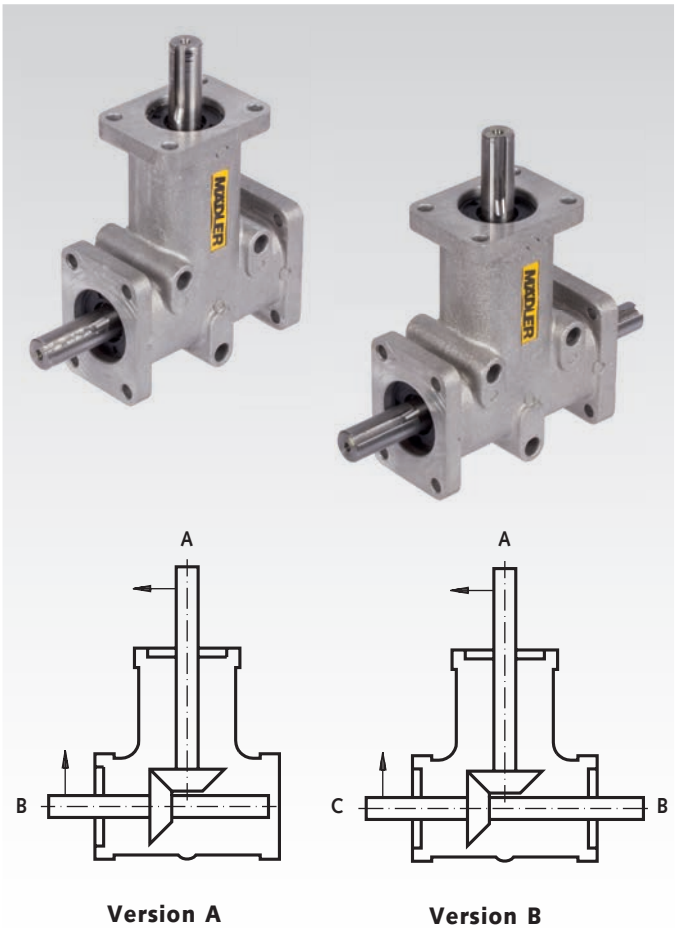

Version A **Version B**

Performance Data

Output Speed* min^{-1}	Ratio i	Size 1 Input Power kW	Size 1 Output Torque** Nm	Size 2 Input Power kW	Size 2 Output Torque** Nm	Size 3 Input Power kW	Size 3 Output Torque** Nm	Size 4 Input Power kW	Size 4 Output Torque** Nm
50	1 : 1	0,02	3,5	0,05	10,0	0,18	35,0	0,31	60
100	1 : 1	0,03	3,0	0,10	9,5	0,34	32,0	0,61	58
200	1 : 1	0,06	2,8	0,20	9,5	0,64	30,5	1,17	56
400	1 : 1	0,11	2,6	0,38	9,0	1,22	29,0	2,18	52
700	1 : 1	0,18	2,5	0,65	8,8	2,09	28,5	3,37	46
1400	1 : 1	0,35	2,4	1,29	8,8	3,99	27,2	6,45	44
2000***	1 : 1	0,31	1,5	1,15	5,5	3,77	18,0	7,33	35
3000***	1 : 1	0,38	1,2	1,26	4,0	4,71	15,0	7,54	24
50	2 : 1	0,02	3,0	0,04	8,0	0,14	26,0	0,26	50
100	2 : 1	0,03	2,5	0,07	7,0	0,25	24,0	0,46	44
200	2 : 1	0,05	2,2	0,14	6,8	0,46	22,0	0,90	43
400	2 : 1	0,09	2,1	0,29	6,8	0,88	21,0	1,72	41
700	2 : 1	0,15	2,0	0,50	6,8	1,47	20,0	3,00	40,9
1400	2 : 1	0,18	1,2	0,66	4,5	2,35	16,0	3,67	25

* The gearboxes are thus dimensioned, that the lifetime comes to 10,000 hours at full load and a starting speed of 1,400 min^{-1}.

** Only for version A. At version B, the torque at each output shaft end may be only 50%.

*** Speeds above 1,400 min^{-1} shorten the lifespan and are only permitted for a short time. If the permiss. operating temperature is exceeded, oil leaks may occur.

Input shaft / output shaft, speed

At both types and both ratios, the input can be at shaft A as well as at shaft B/C.
At ratio 1:1 the maximum speed is 1,400 min^{-1}.
Ratio 2:1 can be used for gearing down and also for gearing up.
Gearing down: Input at shaft A with max. speed 1,400 min^{-1} (output speed max. 700 min^{-1}).
Gearing up: Input at shaft B/C with max. speed 750 min^{-1} (output speed max. 1,500 min^{-1}).

Dimensions Table Bevel Gearboxes DZA

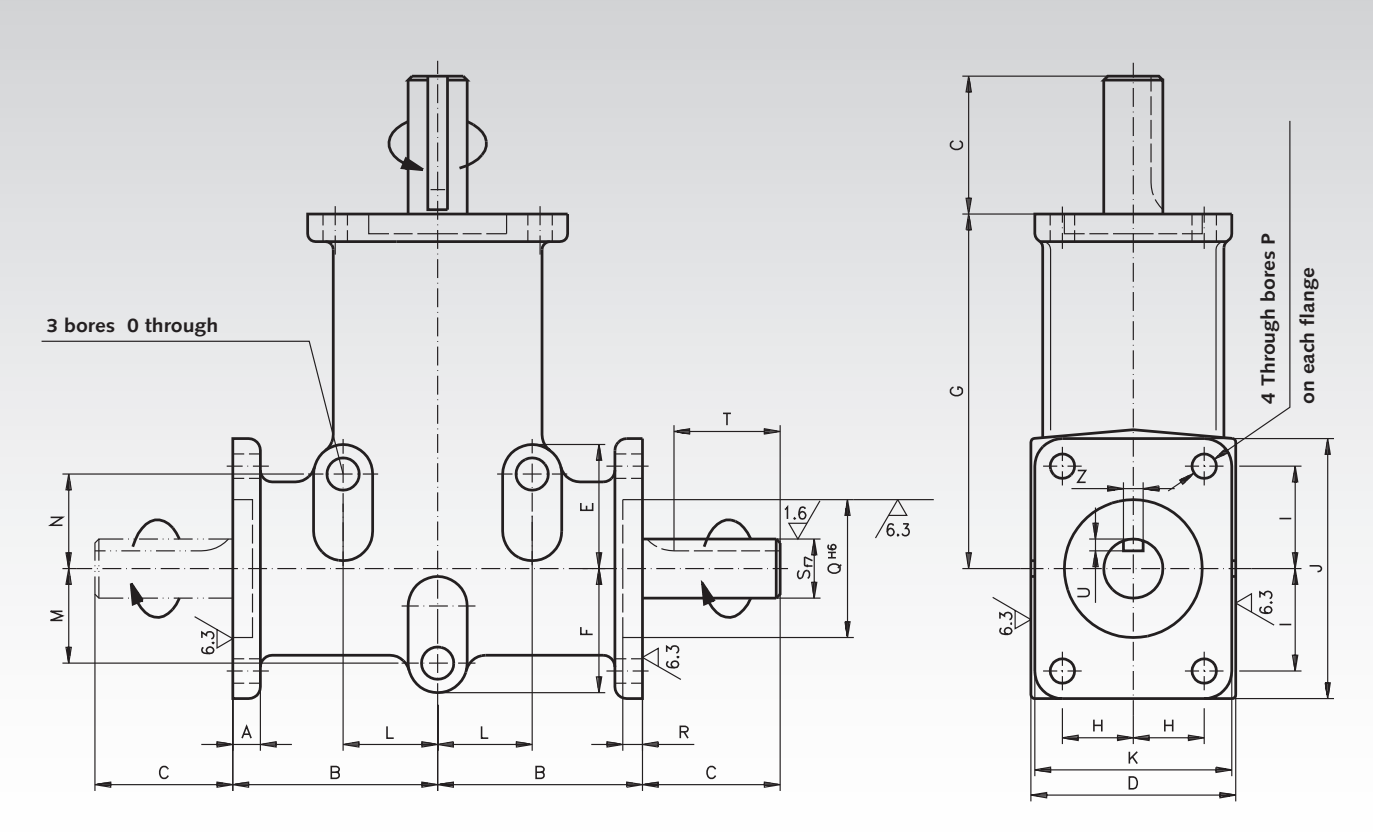

Size	Shaft-Ø mm	No. of Output-Shafts	Ratio	A	B	C	D	E	F	G	H	I	J	K	L	M	N	O	P	Q	R	S	T*	U	Z	Weight kg
				Dim. in mm																						
1	8	1	1 : 1	6	34	15	34	21	21	60	11	15	40	32	16	16	16	5,2	4,2	22	2	8	-	-	-	0,30
1	8	2	1 : 1	6	34	15	34	21	21	60	11	15	40	32	16	16	16	5,2	4,2	22	2	8	-	-	-	0,31
1	8	1	2 : 1	6	34	15	34	21	21	60	11	15	40	32	16	16	16	5,2	4,2	22	2	8	-	-	-	0,30
1	8	2	2 : 1	6	34	15	34	21	21	60	11	15	40	32	16	16	16	5,2	4,2	22	2	8	-	-	-	0,31
2	15	1	1 : 1	10	52	35	52	31,5	31,5	90	18	26	66	50	24	24	24	8,2	6,2	35	3	15	27	3	5	1,25
2	15	2	1 : 1	10	52	35	52	31,5	31,5	90	18	26	66	50	24	24	24	8,2	6,2	35	3	15	27	3	5	1,31
2	15	1	2 : 1	10	52	35	52	31,5	31,5	90	18	26	66	50	24	24	24	8,2	6,2	35	3	15	27	3	5	1,25
2	15	2	2 : 1	10	52	35	52	31,5	31,5	90	18	26	66	50	24	24	24	8,2	6,2	35	3	15	27	3	5	1,31
3	20	1	1 : 1	8,5	75	50	76	47	47	140	27	38	97	74	38	38	38	9,0	8,5	52	2,5	20	40	3,5	6	3,75
3	20	2	1 : 1	8,5	75	50	76	47	47	140	27	38	97	74	38	38	38	9,0	8,5	52	2,5	20	40	3,5	6	3,89
3	20	1	2 : 1	8,5	75	50	76	47	47	140	27	38	97	74	38	38	38	9,0	8,5	52	2,5	20	40	3,5	6	3,75
3	20	2	2 : 1	8,5	75	50	76	47	47	140	27	38	97	74	38	38	38	9,0	8,5	52	2,5	20	40	3,5	6	3,89
4	25	1	1 : 1	13	80	70	100	81	57,5	150	38	38	99	98	45	45	70	10,3	10,3	62	3,5	25	60	4	8	6,20
4	25	2	1 : 1	13	80	70	100	81	57,5	150	38	38	99	98	45	45	70	10,3	10,3	62	3,5	25	60	4	8	6,52
4	25	1	2 : 1	13	80	70	100	81	57,5	150	38	38	99	98	45	45	70	10,3	10,3	62	3,5	25	60	4	8	6,20
4	25	2	2 : 1	13	80	70	100	81	57,5	150	38	38	99	98	45	45	70	10,3	10,3	62	3,5	25	60	4	8	6,52

* Size 1 without feather key groove.

Permissible Radial and Axial Loads

Size	F_R** N	F_A*** N
1	60	20
2	140	50
3	300	80
4	400	160

** Permiss. radial force for F_A=0.
*** Permiss. axial force for F_R=0.

Size	1	2	3	4
Oil volume (in dm^3)	0.03	0.06	0.10	0.13

Operating Factors

Operating hours per day	3	8	12	24
Uniform load	0,7	0,9	1	1,3
Light shocks	0,9	1	1,3	1,8
Heavy shocks	1,3	1,6	1,8	2,3

Operating temperature -18° to + 80°C.

Bevel Gearboxes DZR, Stainless Steel

General data: High resistance to corrosion.
4 sizes and 2 versions.
Ratio either 1 : 1 or 2 : 1. Any mounting position possible.
Ratio for gearing up to max. 750 min^{-1} possible.

Housing: Stainless steel 1.4401 (V4A / AISI 316). Thick-walled, one-piece housing, fully oil-tight and dust-proof.

Gearing: Gleason-spiral bevel gears, hardened.

Shafts/bearing system: Stainless steel 1.4401 (V4A / AISI 316), ground and mounted on ball bearings. **From size 2 with keyways.**

Lubrication/maintenance: Lubricated for life, viscosity ISO VG 150. Gearboxes are maintenance free.

Angular backlash: 15 to 30 angular minutes.

Permiss. operating temperature: -18°C to +80°C.

Ordering details: e.g.: Product No., Type, Ratio, Size, Version

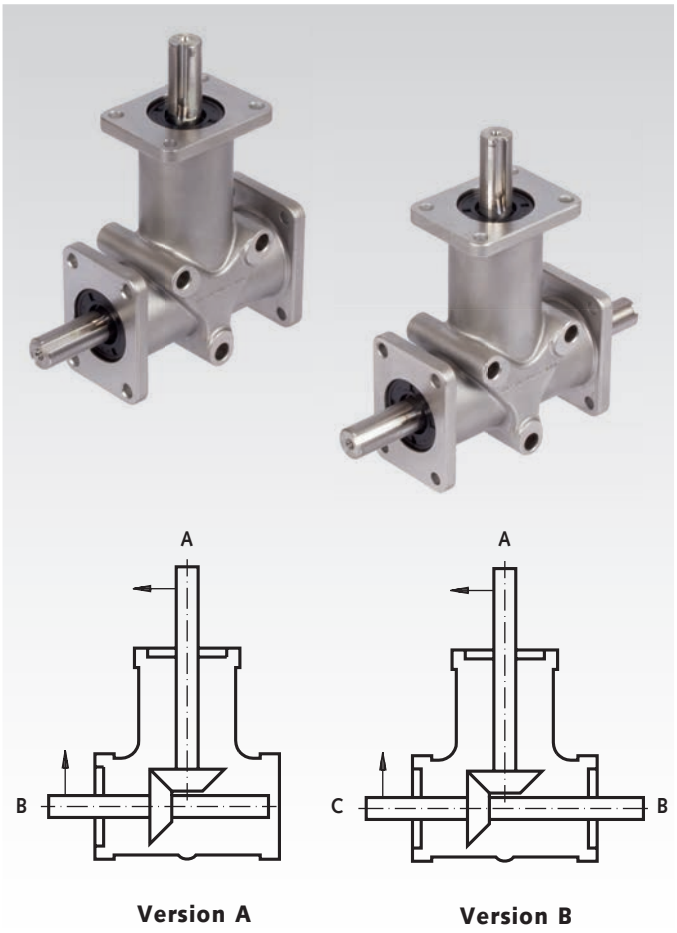

Product No.	Ratio	Size	Version	Shaft-Ø mm	Weight kg
410 910 00	1 : 1	1	A	8	0,483
410 920 00	1 : 1	1	B	8	0,492
410 912 00	1 : 1	2	A	15	1,795
410 922 00	1 : 1	2	B	15	1,855
410 914 00	1 : 1	3	A	20	5,388
410 924 00	1 : 1	3	B	20	5,536
410 916 00	1 : 1	4	A	25	9,136
410 926 00	1 : 1	4	B	25	9,445
410 910 02	2 : 1	1	A	8	0,483
410 920 02	2 : 1	1	B	8	0,492
410 912 02	2 : 1	2	A	15	1,795
410 922 02	2 : 1	2	B	15	1,855
410 914 02	2 : 1	3	A	20	5,538
410 924 02	2 : 1	3	B	20	5,536
410 916 02	2 : 1	4	A	25	9,136
410 926 02	2 : 1	4	B	25	9,445

Performance Data

		Size 1		Size 2		Size 3		Size 4	
Output Speed* min^{-1}	Ratio i	Input Power kW	Output Torque** Nm	Input Power kW	Output Torque** Nm	Input Power kW	Output Torque** Nm	Input Power kW	Output Torque** Nm
50	1 : 1	0,01	2,20	0,04	7,2	0,11	21,0	0,22	42
100	1 : 1	0,02	2,00	0,07	6,7	0,22	20,5	0,42	40
200	1 : 1	0,04	1,75	0,14	6,5	0,42	20,0	0,80	38
400	1 : 1	0,07	1,75	0,27	6,5	0,82	19,5	1,51	36
700	1 : 1	0,13	1,70	0,44	6,0	1,39	19,0	2,49	34
1400	1 : 1	0,24	1,60	0,88	6,0	2,79	19,0	4,55	31
2000***	1 : 1	0,27	1,30	0,94	4,5	3,35	16,0	5,24	25
3000***	1 : 1	0,35	1,10	1,26	4,0	4,40	14,0	6,91	22
50	2 : 1	0,01	1,60	0,03	5,7	0,10	19,0	0,20	39
100	2 : 1	0,02	1,50	0,06	5,5	0,19	18,0	0,39	37
200	2 : 1	0,03	1,50	0,11	5,0	0,36	17,0	0,73	35
400	2 : 1	0,06	1,40	0,21	5,0	0,67	16,0	1,38	33
700	2 : 1	0,10	1,40	0,35	4,75	1,03	14,0	2,13	29
1400	2 : 1	0,16	1,10	0,59	4,0	1,76	12,0	3,37	23

* The gearboxes are thus dimensioned, that the lifetime comes to 10,000 hours at full load and a starting speed of 1,400 min^{-1}.

** Only for version A. At version B, the torque at each output shaft end may be only 50%.

*** Speeds above 1,400 min^{-1} shorten the lifespan and are only permitted for a short time. If the permiss. operating temperature is exceeded, oil leaks may occur.

Input shaft / output shaft, speed

At both types and both ratios, the input can be at shaft A as well as at shaft B/C.
At ratio 1:1 the maximum speed is 1,400 min^{-1}.
Ratio 2:1 can be used for gearing down and also for gearing up.
Gearing down: Input at shaft A with max. speed 1,400 min^{-1} (output speed max. 700 min^{-1}).
Gearing up: Input at shaft B/C with max. speed 750 min^{-1} (output speed max. 1,500 min^{-1}).

Dimensions Table Bevel Gearboxes DZR, Stainless Steel

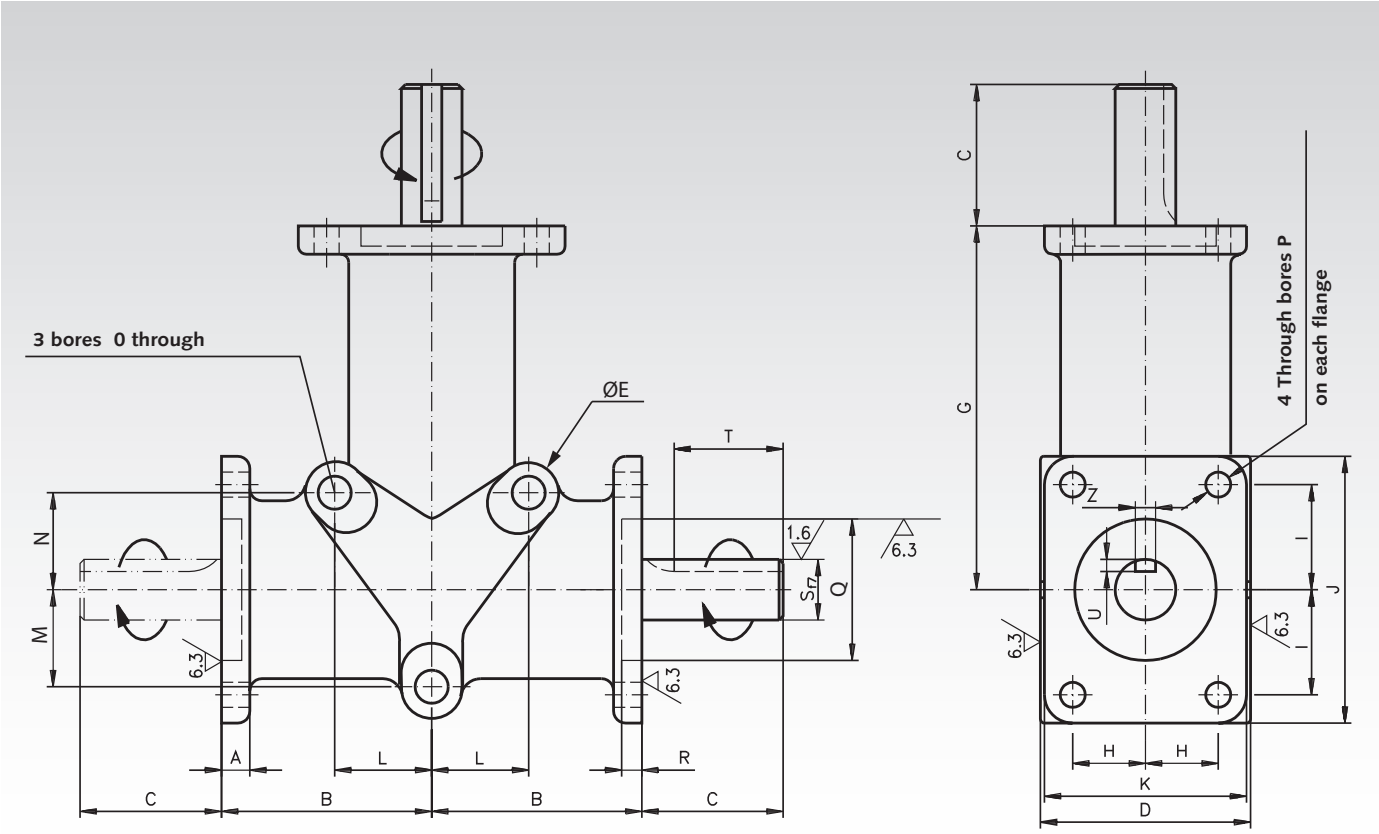

Size	Shaft-Ø mm	No. of Output-Shafts	Ratio	A	B	C	D	E	G	H	I	J	K	L	M	N	O	P	Q^{H7}	R	S^{f7}	T*	U	Z	Weight kg
				Dim. in mm																					
1	8	1	1 : 1	5	34	15	33	11	60	11	15	42,4	32	16	16	16	5,2	4,2	22	1,3	8	-	-	-	0,483
1	8	2	1 : 1	5	34	15	33	11	60	11	15	42,4	32	16	16	16	5,2	4,2	22	1,3	8	-	-	-	0,492
1	8	1	2 : 1	5	34	15	33	11	60	11	15	42,4	32	16	16	16	5,2	4,2	22	1,3	8	-	-	-	0,483
1	8	2	2 : 1	5	34	15	33	11	60	11	15	42,4	32	16	16	16	5,2	4,2	22	1,3	8	-	-	-	0,492
2	15	1	1 : 1	7	52	35	52	17	90	18	26	65	50	24	24	24	8,5	6,2	35	2,0	15	27	3	5	1,795
2	15	2	1 : 1	7	52	35	52	17	90	18	26	65	50	24	24	24	8,5	6,2	35	2,0	15	27	3	5	1,855
2	15	1	2 : 1	7	52	35	52	17	90	18	26	65	50	24	24	24	8,5	6,2	35	2,0	15	27	3	5	1,795
2	15	2	2 : 1	7	52	35	52	17	90	18	26	65	50	24	24	24	8,5	6,2	35	2,0	15	27	3	5	1,855
3	20	1	1 : 1	9	75	50	76	18	140	27	38	94	74	38	38	38	9,0	8,5	52	2,0	20	40	3,5	6	5,388
3	20	2	1 : 1	9	75	50	76	18	140	27	38	94	74	38	38	38	9,0	8,5	52	2,0	20	40	3,5	6	5,536
3	20	1	2 : 1	9	75	50	76	18	140	27	38	94	74	38	38	38	9,0	8,5	52	2,0	20	40	3,5	6	5,538
3	20	2	2 : 1	9	75	50	76	18	140	27	38	94	74	38	38	38	9,0	8,5	52	2,0	20	40	3,5	6	5,536
4	25	1	1 : 1	11	80	70	100	25	150	38	38	101	98	45	45	70	12,5	10,3	62	3,0	25	60	4	8	9,136
4	25	2	1 : 1	11	80	70	100	25	150	38	38	101	98	45	45	70	12,5	10,3	62	3,0	25	60	4	8	9,445
4	25	1	2 : 1	11	80	70	100	25	150	38	38	101	98	45	45	70	12,5	10,3	62	3,0	25	60	4	8	9,136
4	25	2	2 : 1	11	80	70	100	25	150	38	38	101	98	45	45	70	12,5	10,3	62	3,0	25	60	4	8	9,445

* Size 1 without feather key groove.

Permissible Radial and Axial Loads

Size	F_R** N	F_A*** N
1	60	20
2	140	50
3	300	80
4	400	160

** Permiss. radial force for F_A=0.
*** Permiss. axial force for F_R=0.

Size	1	2	3	4
Oil volume (in dm^3)	0.03	0.06	0.10	0.13

Operating Factors

Operating hours per day	3	8	12	24
Uniform load	0,7	0,9	1	1,3
Light shocks	0,9	1	1,3	1,8
Heavy shocks	1,3	1,6	1,8	2,3

Operating temperature -18° to + 80°C.

Bevel Gearboxes DZA Model H

General data: Gearbox with hollow shaft on the output side. 2 sizes. Ratio either 1 : 1 or 2 : 1 or 3 : 1. Any mounting position possible. The maximum input speed (hollow shaft as input device) for gearing up is 750 min^{-1} at 2 : 1 and 500 min^{-1} at 3 : 1.

Housing: Thick-walled, one-piece cast aluminium housing, fully oil-tight and dust-proof.

Gearing: The gears are to the Coniflex system, case hardened.

Shafts/bearing system: Input and output shaft are ground and mounted on ball bearings.

Lubrication/maintenance: Lubricated for life, viscosity ISO VG 150. Gearboxes are maintenance free.

Angular backlash: 15 to 30 angular minutes.

Permiss. operating temperature: -18°C to +80°C.

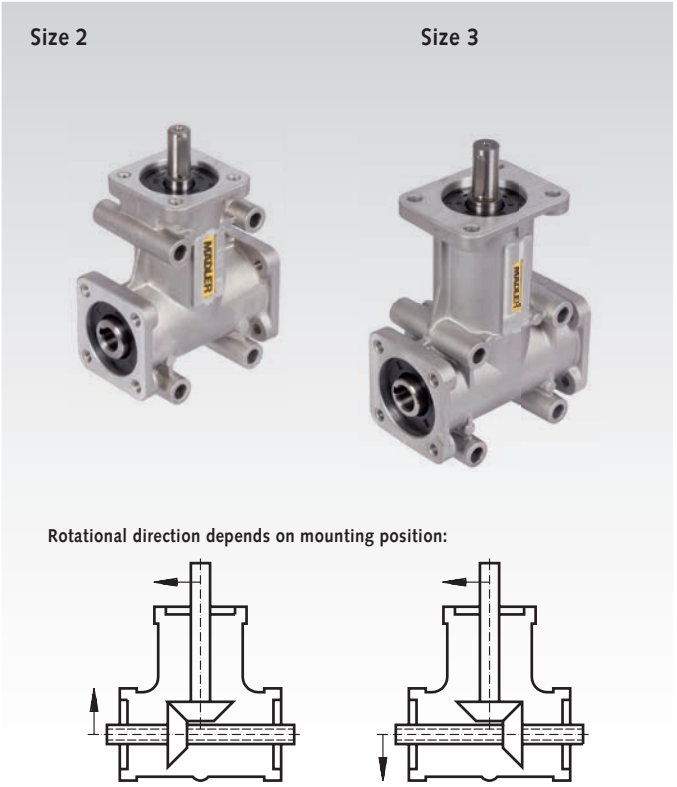

Ordering details: e.g.: Product No., Type, Size, Ratio

Product No.	Size	Ratio i	Input Power* kW	Output Torque* Nm	Oil Volume dm^3	Weight kg
410 132 00	2	1:1	2,49	17	0,095	2,0
410 132 02	2	2:1	0,81	11	0,095	2,0
410 132 03	2	3:1	0,39	8	0,095	2,0
410 134 00	3	1:1	5,57	38	0,23	4,8
410 134 02	3	2:1	1,83	25	0,23	4,8
410 134 03	3	3:1	0,88	18	0,23	4,8

*Permiss. max. values for input speed 1,400 min^{-1} (at the solid shaft) at continuous operation.

Dimensions Size 2

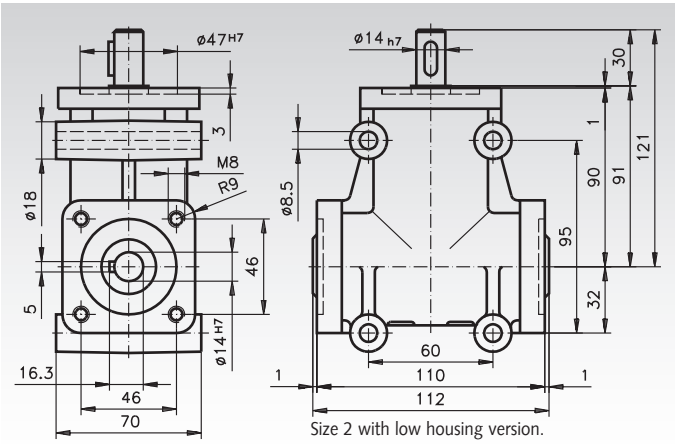

Size 2 with low housing version.
The dimensions and fastening threads M8 are the same on all three flanges.

Dimensions Size 3

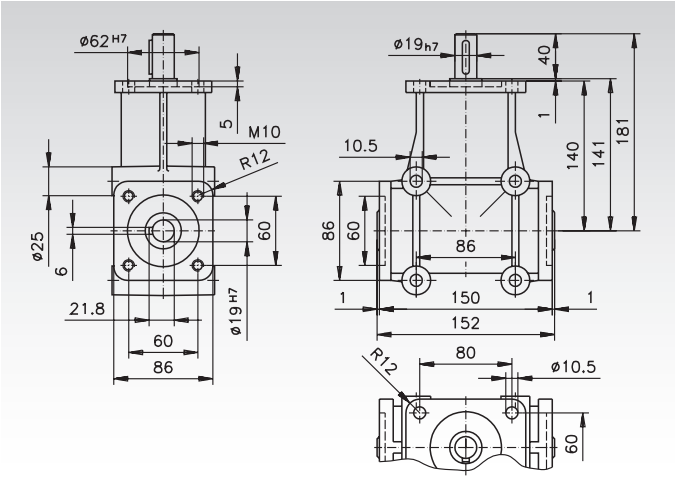

Permissible Radial and Axial Loads

Size	F_R** N	F_A*** N
2	250	50
3	400	80

** Permiss. radial force at F_A=0.
*** Permiss. axial force at F_R=0.

Operating Factors

Operating hours per day	3	8	12	24
Uniform load	0,8	0,9	1	1,25
Light shocks	0,9	1	1,25	1,5
Strong shocks	1,0	1,5	1,6	1,8

Bevel Gearboxes KU/I (Rigid Design)

General data: 3 Designs, 6 standard version, and many further variations available as multi-shaft gearboxes, please enquire. **Also Available in corrosion-proof and NO-TOX version for the food processing and pharmaceutic industry.**

Housing: Thick-walled grey cast iron, fully sealed against oil leaks and protected against dust. Due to the cube shape, all 6 sides of the gear box can be used as mounting surfaces. The diameters l_1 and l_2 are provided for use as alignment studs.

Gearing: Hardened bevel gears, lapped in pairs

Ratios: 1:1, 1.5:1, 2:1, 3:1, 4:1, 5:1, 6:1
Special transmission ratios available on request. Size 0 only to 3:1.

Bearing System: Generously dimensioned roller bearings, reinforced bearings on request.

Lubrication: The gearboxes are fully enclosed, lubricated for life and maintenance free. On request, the gearboxes can also be supplied with oil change lubrication or NO-TOX lubrication for the food industry. If the gearbox is used at higher speeds (see table) venting must be provided. For this purpose, please state the mounting position (downward-facing side) and operating time.

Model K: Input side A: Ratio for gearing up.
Input side C: Transmission ratio for gearing down.

Model L: Straight-through shaft, slowly turning.

Model H: Straight-through hollow shaft, slowly turning.

Model K **Page 674 - 675**



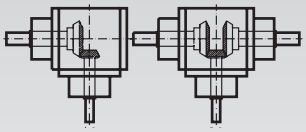

Model L **Page 676 - 677**



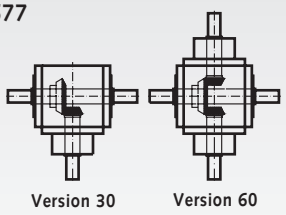

Model H **Page 678 - 679**



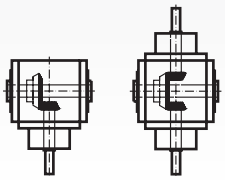

Ordering details: e.g.: Type, Model, Size, Version, Mounting Side (A-F), Ratio, Mounting Position, Output Speed, Product No.

Selection of the Gearbox Size

The following pages serve to determine the required gearbox size from the tables considering:

Output Torque – Power – Load of Input and Output Shaft

In this process, all 3 factors must be taken into consideration, when selecting the gearbox according to the specific requirements. The stated figures refer to an operating time of 100%. Operating time 8h/day. Ambient temperature 20°C, shock-free operation and no additional cooling. If the operating conditions differ from the above, the following factors have to be regarded when determining the required gearbox size (see examples).

Factors by which the transmissible torque has to be multiplied:

	Output (load type of driven machine)			
Input	Uniform	Medium shocks	Strong shocks	Operating time
Uniform	1.0	1.25	1.75	up to 2 h/day: Load factor x 0.8
Light shocks	1.25	1.5	2.0	up to 8 h/day: Load factor x 1.0
Medium shocks	1.5	1.75	2.25	up to 8 h/day: Load factor x 1.25

The product of **transmissible torque x load factor x operating time factor** has to be **smaller** than the **permiss. torque** stated in the table.

Example:
Torque: 250 Nm; Load factor 1.5; Operating time 1.5 h/day
Torque for gearbox selection: 250 Nm x 1.5 x 0.8 = 300 Nm; i = 1 : 1; n = 250 min^{-1} = Selected Gearbox Size 25.

Factors determining the max. transmissible power considering heating up of the gear box:

Ambient temperature T	Operating time OT
10° C: permiss. power x 1.2	OT 100% permiss. power x 1.0
20° C: permiss. power x 1.0	OT 80% permiss. power x 1.2
30° C: permiss. power x 0.9	OT 60% permiss. power x 1.4
40° C: permiss. power x 0.8	OT 40% permiss. power x 1.6
50° C: permiss. power x 0.7	OT 20% permiss. power x 1.8

At the same time do not exceed the permiss.T_2!

Max. permiss. power output without cooling at 100% OT	
Gearbox size 0	1.5 kW
Gearbox size 1	4.0 kW
Gearbox size 2	7.0 kW
Gearbox size 25	17.0 kW
Gearbox size 30	26.0 kW

If the **permissible** power multiplied with the ambient temperature factor and the operating time is **smaller** than the **existing** power, additional cooling of the gearbox must be provided.

Example:
Gearbox size 25; i = 1 : 1; n = 750 min^{-1};
P = 25.63 kW; T = 30°C, OT = 20%
Maximum power from the table: 17 kW x 0.9 x 1.8 = 27.5 kW
Gearbox size sufficient, no additional cooling required.

Bevel Gearboxes KU/I, Model K, Technical Data

Ratio	Size	Version 10 Product No.	Version 20 Product No.	Permissible Output Torque T_2 in Nm** at Output Speed n_2 in min^{-1}							Max. Input Power P_1 in kW** at Input Speed n_1 in min^{-1}						
				50	250	500	750	1000	1500	3000	50	250	500	750	1000	1500	3000
1 : 1	0	*412 001 00	412 002 00	18	17	15	13	12	11	10	0,1	0,47	0,83	1,07	1,32	1,82	3,31
	1	*412 004 00	412 005 00	50	44	40	37	34	32	27	0,28	1,21	2,2	3,06	3,75	5,29	8,93
	2	*412 007 00	412 008 00	130	123	115	103	92	82	66	0,72	3,39	6,34	8,51	10,14	13,56	21,82
	25	*412 010 00	412 011 00	380	350	330	310	290	260	---	2,09	9,64	18,19	25,63	31,96	42,99	---
	30	*412 013 00	412 014 00	750	710	620	555	510	450	---	4,13	19,56	34,17	45,88	56,21	74,4	---
	Size	Product No.	Product No.	33	167	333	500	667	1000	2000	50	250	500	750	1000	1500	3000
1,5 : 1	0	412 001 01	412 002 01	18	17	15	13	12	11	10	0,07	0,31	0,55	0,72	0,88	1,21	2,2
	1	412 004 01	412 005 01	45	40	37	35	32	29	25	0,16	0,74	1,36	1,93	2,35	3,2	5,51
	2	412 007 01	412 008 01	113	108	105	94	86	78	61	0,41	1,99	3,85	5,18	6,32	8,6	13,45
	25	412 010 01	412 011 01	355	330	315	295	280	252	185	1,29	6,07	11,56	16,26	20,59	27,78	40,78
	30	412 013 01	412 014 01	750	690	615	550	505	437	330	2,73	12,7	22,57	30,31	37,13	48,17	72,75
	Size	Product No.	Product No.	25	125	250	375	500	750	1500	50	250	500	750	1000	1500	3000
2 : 1	0	*412 001 02	412 002 02	18	17	15	13	12	11	10	0,05	0,23	0,41	0,54	0,66	0,91	1,65
	1	*412 004 02	412 005 02	37	36	34	32	31	27	23	0,1	0,5	0,94	1,32	1,71	2,23	3,8
	2	*412 007 02	412 008 02	107	98	92	86	81	73	56	0,29	1,35	2,54	3,55	4,46	6,03	9,26
	25	*412 010 02	412 011 02	355	320	300	280	270	245	170	0,98	4,41	8,27	11,57	14,88	20,25	28,11
	30	412 013 02	412 014 02	750	680	610	540	500	425	310	2,07	9,37	16,81	22,32	27,56	35,13	51,25
	Size	Product No.	Product No.	17	83	167	250	333	500	1000	50	250	500	750	1000	1500	3000
3 : 1	0	*412 001 03	412 002 03	14	13	13	12	12	11	10	0,03	0,12	0,24	0,33	0,44	0,61	1,1
	1	*412 004 03	412 005 03	37	36	34	32	31	27	23	0,07	0,33	0,63	0,88	1,14	1,49	2,54
	2	*412 007 03	412 008 03	110	95	90	87	82	74	58	0,21	0,87	1,66	2,40	3,01	4,08	6,39
	25	412 010 03	412 011 03	305	280	260	250	245	230	190	0,57	2,56	4,79	6,89	8,99	12,68	20,94
	30	412 013 03	412 014 03	690	630	600	530	490	470	420	1,29	5,76	11,04	15,98	20,37	28,38	46,29
	Size	Product No.	Product No.	12,5	62,5	125	187,5	250	375	750	50	250	500	750	1000	1500	3000
4 : 1	1	412 004 04	412 005 04	37	36	34	32	31	27	23	0,05	0,25	0,47	0,66	0,85	1,12	1,9
	2	412 007 04	412 008 04	90	87	84	82	79	74	60	0,12	0,6	1,16	1,69	2,18	3,06	4,96
	25	412 010 04	412 011 04	280	270	260	250	240	220	180	0,39	1,86	3,58	5,17	6,61	9,09	14,88
	30	412 013 04	412 014 04	580	550	525	510	485	420	350	0,8	3,79	7,23	10,54	13,36	18,81	28,93
	Size	Product No.	Product No.	10	50	100	150	200	300	600	50	250	500	750	1000	1500	3000
5 : 1	1	412 004 05	412 005 05	37	36	34	32	31	27	23	0,04	0,2	0,37	0,53	0,68	0,89	1,52
	2	412 007 05	412 008 05	95	92	89	86	80	72	60	0,1	0,51	0,98	1,42	1,76	2,38	3,97
	25	412 010 05	412 011 05	280	270	250	240	225	215	180	0,32	1,49	2,76	3,97	4,96	7,11	11,9
	30	412 013 05	412 014 05	525	505	470	440	420	380	300	0,58	2,78	5,18	7,27	9,26	12,57	19,84
	Size	Product No.	Product No.	8	42	83	125	167	250	500	50	250	500	750	1000	1500	3000
6 : 1	1	412 004 06	412 005 06	33	30	29	29	29	27	23	0,03	0,14	0,27	0,4	0,53	0,74	1,25
	2	412 007 06	412 008 06	71	69	68	68	66	64	54	0,06	0,33	0,63	0,94	1,22	1,75	2,95
	25	412 010 06	412 011 06	210	199	187	176	164	143	129	0,18	0,92	1,72	2,43	3,01	3,95	7,09

* Gearboxes in stock (without ventilation).

** Transmission ratio for gearing down. For gearing up the values for 1:1 apply. In addition the heating up process has to be considered (see page 673).

Max. Speed in min^{-1} for Gear Boxes without Ventilation, at the Output Shaft, i = 1:1 to 6:1

For version 10 and horizontal mounting position. For version 20 the values have to be halved. Values for other OT and other mounting positions on request.

Operating Time	Size 0	Size 1*	Size 2*	Size 25*	Size 30*
ED 100 %	1100	700	600	400	300
ED 30 %	1900	1300	1000	700	500

* From size 1 available with ventilation against surcharge.

Permissible Radial and Axial Loads at shaft d_1

Gearbox Size	T Nm	n_1 [min^{-1}] - F_R [N] 3000	1000	500	250	100	50<
0	< 12	180	250	300	350	450	550
	> 12	150	210	250	290	380	460
1	< 30	300	400	470	580	700	800
	> 30	250	330	390	490	590	670
2	< 80	470	620	720	900	1150	1400
	> 80	390	520	600	750	960	1170
25	< 220	1200	1600	1900	2200	2850	3300
	> 220	1000	1340	1590	1840	2380	2750
30	< 500	2200	1700	3200	3900	5000	6200
	> 500	1840	1420	2670	3250	4170	5170

The maximum permiss. radial forces stated in the table are calculated for the centre of the output shaft end, also calculating in the speed and torque. The values were calculated for the most unfavourable load direction. Precise calculation of load and rotational direction may lead to higher permissible loads for the shaft – please ask us.

Permissible Radial and Axial Loads at shaft d_2

Gearbox Size	T Nm	n_1 [min^{-1}] - F_R [N] 3000	1000	500	250	100	50
0	< 12	180	250	300	350	450	550
	> 12	150	210	250	290	380	460
1	< 30	300	400	470	580	700	800
	> 30	250	330	390	490	590	670
2	< 80	470	620	720	900	1150	1400
	> 80	390	520	600	750	960	1170
25	< 220	1200	1600	1900	2200	2850	3300
	> 220	1000	1340	1590	1840	2380	2750
30	< 500	2200	1700	3200	3900	5000	6200
	> 500	1840	1420	2670	3250	4170	5170

Axial loads F_A can be absorbed, without need for further calculation, up to about 50% of the permiss. radial forces. If the axial load exceeds this value considerably or if combined loads of F_R and F_A occur – please ask us.

Dimensions Table Bevel Gearboxes KU/I Model K

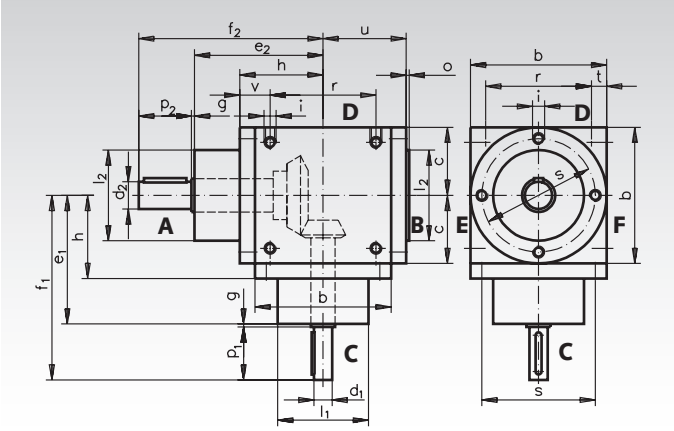

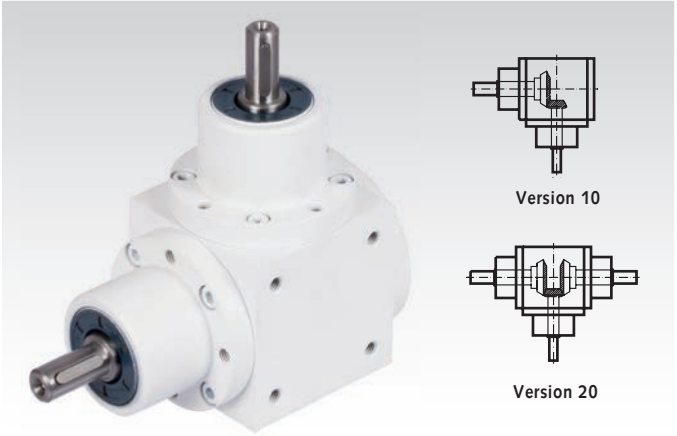

The driving unit can be connected to either d_1 or d_2, so that transmission ratios of up to 6 : 1 for gearing down and for gearing up are possible (apart from gearbox size 0).
Shaft ends for all types: Tolerance = j_6; thread alignment according to DIN 332-2, see page 820. Keyways according to DIN 6885/1.
Threaded holes for mounting on all sides of the gearbox as standard. Thread depth of mounting holes = 2 x thread diameter or the thickness of the flange.

Dimensions for i = 1 : 1 to 6 : 1 (intermediate transmission ratios on request)

Size	b mm	c mm	d_1 j6 mm				d_2 j6 mm	e_1 mm			e_2 mm
			1 : 1 1,5 : 1 2 : 1	3 : 1	4 : 1	5 : 1 6 : 1	1 : 1 to 6 : 1	1 : 1 1,5 : 1 2 : 1	3 : 1	4 : 1 5 : 1 6 : 1	
0	65	32,5	12	12	-	-	12	72	72	-	72
1	90	45	18	12	12	12	18	85	85	95	85
2	120	60	25	20	20	15	25	115	115	125	115
25	160	80	35	28	24	24	35	150	150	170	150
30	200	100	42	35	35	28	42	190	190	190	190

Size	f_1 mm				f_2 mm	g mm	h mm	i mm	l_1 f7 mm			l_2 f7 mm	o mm
	1 : 1 1,5 : 1 2 : 1	3 : 1	4 : 1	5 : 1 6 : 1					1 : 1 1,5 : 1 2 : 1	3 : 1 4 : 1	5 : 1 6 : 1		
0	100	100	-	-	100	2	42	M6	44	44	-	44	2
1	122	122	132	132	122	2	55	M8	60	60	60	60	2
2	162	162	172	162	162	2	75	M10	80	80	70	80	3
25	212	212	232	232	212	2	95	M12	110	100	100	110	3
30	273	261	261	261	273	3	120	M12	120	120	110	120	3

Size	p_1 mm			p_2 mm	r mm	s mm	t mm	u mm	v mm
	1 : 1 1,5 : 1 2 : 1	3 : 1 4 : 1	5 : 1 6 : 1	1 : 1 to 6 : 1					
0	26	26	-	26	45	54	10	42	19,5
1	35	35	35	35	70	75	10	55	20,0
2	45	45	35	45	100	100	10	72	25,0
25	60	60	60	60	120	135	20	95	35,0
30	80	68	68	80	160	175	20	117	40,0

Size	Feather Key Size at d_1 mm			Feather Key Size at d_2 and d_3 mm	Weight kg
	1 : 1 1,5 : 1 2 : 1	3 : 1 4 : 1	5 : 1 6 : 1	1 : 1 to 6 : 1	
0	4 x 20	4 x 20	-	4 x 20	2,5
1	6 x 28	4 x 28	4 x 28	6 x 28	5,5
2	8 x 36	6 x 36	5 x 28	8 x 36	12
25	10 x 50	8 x 50	8 x 50	10 x 50	24
30	12 x 70	10 x 63	8 x 63	12 x 70	48

Size	K 0	K 1	K 2	K 25	K 30
Oil volume (in dm³)	0,1	0,3	0,6	1,2	2,5

Bevel Gearboxes KU/I, Model L, Technical Data

Ratio	Size	Version 30 Product No.	Version 60 Product No.	Permissible Output Torque T_2 in Nm** at Output Speed n_2 in min^{-1}							Max. Input Power P_1 in kW** at Input Speed n_1 in min^{-1}						
				50	250	500	750	1000	1500	3000	50	250	500	750	1000	1500	3000
1 : 1	0	*412 031 00	412 032 00	18	17	15	13	12	11	10	0,1	0,47	0,83	1,07	1,32	1,82	3,31
	1	*412 034 00	412 035 00	50	44	40	37	34	32	27	0,28	1,21	2,2	3,06	3,75	5,29	8,93
	2	*412 037 00	412 038 00	130	123	115	103	92	82	66	0,72	3,39	6,34	8,51	10,14	13,56	21,82
	25	*412 040 00	412 041 00	380	350	330	310	290	260	---	2,09	9,64	18,19	25,63	31,96	42,99	---
	30	412 043 00	412 044 00	750	710	620	555	510	450	---	4,13	19,56	34,17	45,88	56,21	74,4	---
	Size	**Product No.**	**Product No.**	**33**	**167**	**333**	**500**	**667**	**1000**	**2000**	**50**	**250**	**500**	**750**	**1000**	**1500**	**3000**
1,5 : 1	0	412 031 01	412 032 01	18	17	15	13	12	11	10	0,07	0,31	0,55	0,72	0,88	1,21	2,2
	1	412 034 01	412 035 01	45	40	37	35	32	29	25	0,16	0,74	1,36	1,93	2,35	3,2	5,51
	2	412 037 01	412 038 01	113	108	105	94	86	78	61	0,41	1,99	3,85	5,18	6,32	8,6	13,45
	25	412 040 01	412 041 01	355	330	315	295	280	252	185	1,29	6,07	11,56	16,26	20,59	27,78	40,78
	30	412 043 01	412 044 01	750	690	615	550	505	437	330	2,73	12,7	22,57	30,31	37,13	48,17	72,75
	Size	**Product No.**	**Product No.**	**25**	**125**	**250**	**375**	**500**	**750**	**1500**	**50**	**250**	**500**	**750**	**1000**	**1500**	**3000**
2 : 1	0	*412 031 02	412 032 02	18	17	15	13	12	11	10	0,05	0,23	0,41	0,54	0,66	0,91	1,65
	1	*412 034 02	412 035 02	37	36	34	32	31	27	23	0,1	0,5	0,94	1,32	1,71	2,23	3,8
	2	*412 037 02	412 038 02	107	98	92	86	81	73	56	0,29	1,35	2,54	3,55	4,46	6,03	9,26
	25	*412 040 02	412 041 02	355	320	300	280	270	245	170	0,98	4,41	8,27	11,57	14,88	20,25	28,11
	30	412 043 02	412 044 02	750	680	610	540	500	425	310	2,07	9,37	16,81	22,32	27,56	35,13	51,25
	Size	**Product No.**	**Product No.**	**17**	**83**	**167**	**250**	**333**	**500**	**1000**	**50**	**250**	**500**	**750**	**1000**	**1500**	**3000**
3 : 1	0	*412 031 03	412 032 03	14	13	13	12	12	11	10	0,03	0,12	0,24	0,33	0,44	0,61	1,1
	1	*412 034 03	412 035 03	37	36	34	32	31	27	23	0,07	0,33	0,63	0,88	1,14	1,49	2,54
	2	*412 037 03	412 038 03	110	95	90	87	82	74	58	0,21	0,87	1,66	2,40	3,01	4,08	6,39
	25	412 040 03	412 041 03	305	280	260	250	245	230	190	0,57	2,56	4,79	6,89	8,99	12,68	20,94
	30	412 043 03	412 044 03	690	630	600	530	490	470	420	1,29	5,76	11,04	15,98	20,37	28,38	46,29
	Size	**Product No.**	**Product No.**	**12,5**	**62,5**	**125**	**187,5**	**250**	**375**	**750**	**50**	**250**	**500**	**750**	**1000**	**1500**	**3000**
4 : 1	1	412 034 04	412 035 04	37	36	34	32	31	27	23	0,05	0,25	0,47	0,66	0,85	1,12	1,9
	2	412 037 04	412 038 04	90	87	84	82	79	74	60	0,12	0,6	1,16	1,69	2,18	3,06	4,96
	25	412 040 04	412 041 04	280	270	260	250	240	220	180	0,39	1,86	3,58	5,17	6,61	9,09	14,88
	30	412 043 04	412 044 04	580	550	525	510	485	420	350	0,8	3,79	7,23	10,54	13,36	18,81	28,93
	Size	**Product No.**	**Product No.**	**10**	**50**	**100**	**150**	**200**	**300**	**600**	**50**	**250**	**500**	**750**	**1000**	**1500**	**3000**
5 : 1	1	412 034 05	412 035 05	37	36	34	32	31	27	23	0,04	0,2	0,37	0,53	0,68	0,89	1,52
	2	412 037 05	412 038 05	95	92	89	86	80	72	60	0,1	0,51	0,98	1,42	1,76	2,38	3,97
	25	412 040 05	412 041 05	280	270	250	240	225	215	180	0,32	1,49	2,76	3,97	4,96	7,11	11,9
	30	412 043 05	412 044 05	525	505	470	440	420	380	300	0,58	2,78	5,18	7,27	9,26	12,57	19,84
	Size	**Product No.**	**Product No.**	**8**	**42**	**83**	**125**	**167**	**250**	**500**	**50**	**250**	**500**	**750**	**1000**	**1500**	**3000**
6 : 1	1	412 034 06	412 035 06	33	30	29	29	29	27	23	0,03	0,14	0,27	0,4	0,53	0,74	1,25
	2	412 037 06	412 038 06	71	69	68	68	66	64	54	0,06	0,33	0,63	0,94	1,22	1,75	2,95
	25	412 040 06	412 041 06	210	199	187	176	164	143	129	0,18	0,92	1,72	2,43	3,01	3,95	7,09

* Gearboxes in stock (without ventilation).

** Transmission ratio for gearing down. For gearing up the values for 1:1 apply. In addition the heating up process has to be considered (see page 673).

Max. Speed in min^{-1} for Gearbox without Ventilation, at the Output Shaft, i = 1:1 to 6:1

For version 30 and horizontal mounting position. For version 60 these values have to be halved. Values for other OT and other mounting positions on request.

Operating Time	Size 0	Size 1*	Size 2*	Size 25*	Size 30*
ED 100 %	1100	700	600	400	300
ED 30 %	1900	1300	1000	700	500

* From size 1 available with ventilation against surcharge.

Permissible Radial and Axial Loads at shaft d_1

Gearbox Size	T Nm	n_1 [min^{-1}] - F_R [N] 3000	1000	500	250	100	50
0	< 12	180	250	300	350	450	550
	> 12	150	210	250	290	380	460
1	< 30	300	400	470	580	700	800
	> 30	250	330	390	490	590	670
2	< 80	470	620	720	900	1150	1400
	> 80	390	520	600	750	960	1170
25	< 220	1200	1600	1900	2200	2850	3300
	> 220	1000	1340	1590	1840	2380	2750
30	< 500	2200	1700	3200	3900	5000	6200
	> 500	1840	1420	2670	3250	4170	5170

The maximum permiss. radial forces stated in the table are calculated for the centre of the output shaft end, also calculating in the speed and torque. The values were calculated for the most unfavourable load direction. Precise calculation of load and rotational direction may lead to higher permissible loads for the shaft – please enquire.

Permissible Radial and Axial Loads at shaft d_2

Gearbox Size	T Nm	n_1 [min^{-1}] - F_R [N] 3000	1000	500	250	100	50
0	< 12	300	400	500	650	750	900
	> 12	250	330	420	540	630	750
1	< 30	500	660	800	950	1250	1500
	> 30	420	550	670	790	1040	1250
2	< 80	750	1000	1250	1500	1900	2200
	> 80	630	830	1040	1250	1580	1830
25	< 220	2000	2800	3300	4000	5000	6500
	> 220	1670	2340	2750	3340	4170	5420
30	< 500	3200	4300	5000	6500	8000	10000
	> 500	2670	3580	4170	5420	6670	8330

Axial loads F_A can be absorbed, without need for further calculation, up to about 50% of the permiss. radial forces. If the axial load exceeds this value considerably or if combined loads of F_R and F_A occur – please ask us.

Dimensions Table Bevel Gearboxes KU/I Model L

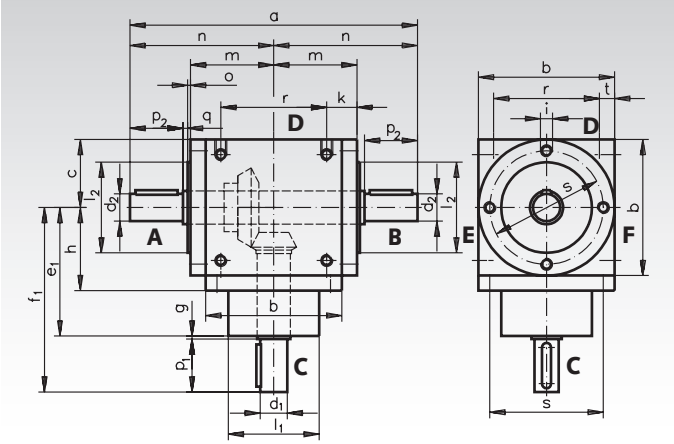

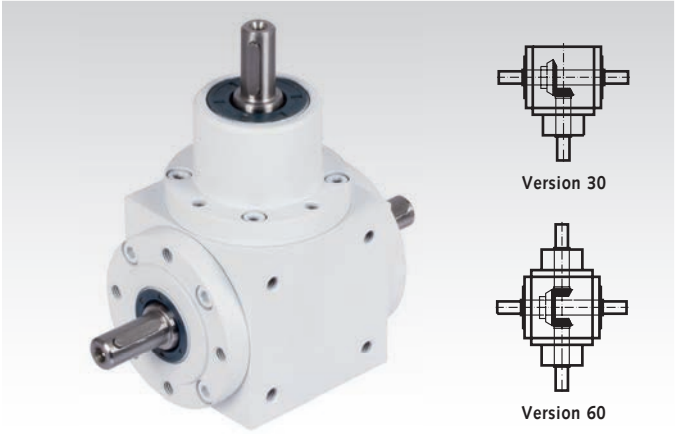

The large bevel gear is usually mounted on the straight-through shaft. It is the slow running one.
The gearbox sizes 1, 2, 25 and 30 can also be supplied as Type LS with straight-through, fast running shaft. In this case the transmission ratio is max. 1 : 2.
Shaft ends for all types: Tolerance = j_6; thread alignment according to DIN 332-2 see page 820. Keyways according to DIN 6885/1.

Threaded holes for mounting on all sides of the gearbox as standard. Thread depth of mounting holes = 2 x thread diameter or the thickness of the flange.

Dimensions for i = 1 : 1 to 6 : 1, power input at d_1 (intermediate transmission ratios on request) *Type LS: straight-through fast running shaft.

Size	a mm	b mm	c mm	d_1 j6 mm				d_2 j6 mm		e_1 mm			f_1 mm				g mm
				1 : 1 1,5 : 1 2 : 1 1 : 1,5* 1 : 2*	3 : 1	4 : 1	5 : 1 6 : 1	1 : 1 bis 6 : 1	1 : 1,5* 1 : 2*	1 : 1 1,5 : 1 2 : 1 1 : 1,5* 1 : 2*	3 : 1	4 : 1 5 : 1 6 : 1	1 : 1 1,5 : 1 2 : 1 1 : 1,5* 1 : 2*	3 : 1	4 : 1	5 : 1 6 : 1	
0	144	65	32,5	12	12	-	-	12	-	72	72	-	100	100	-	-	2
1	190	90	45,0	18	12	12	12	18	14	85	85	98	122	122	132	132	2
2	244	120	60,0	25	20	20	15	25	16	115	115	125	162	162	172	162	2
25	320	160	80,0	35	28	24	24	35	25	150	150	170	212	212	232	232	2
30	406	200	100,0	42	35	35	28	42	35	190	190	190	273	261	261	261	3

Size	h mm	i mm	k mm	l_1 f7 mm			l_2 f7 mm	m mm	n mm	o mm	p_1 mm			p_2 mm
				1 : 1 1,5 : 1 2 : 1 1 : 1,5* 1 : 2*	3 : 1 4 : 1	5 : 1 6 : 1					1 : 1 1,5 : 1 2 : 1 1 : 1,5* 1 : 2*	3 : 1 4 : 1	5 : 1 6 : 1	
0	42	M6	19,5	44	44	-	44	42	72	2	26	26	-	26
1	55	M8	20,0	60	60	60	60	55	95	2	35	35	35	35
2	75	M10	22,0	80	80	70	80	72	122	3	45	45	35	45
25	95	M12	35,0	110	100	100	110	95	160	3	60	60	60	60
30	120	M12	37,0	120	120	110	120	117	203	3	80	68	68	80

Size	q mm	r mm	s mm	t mm	Feather Key Size at d_1 mm			Feather Key Size at d_2 u. d_3 mm		Weight kg
					1 : 1 1,5 : 1 2 : 1 1 : 1,5* 1 : 2*	3 : 1 4 : 1	5 : 1 6 : 1	1 : 1 to 6 : 1	1 : 1,5* 1 : 2*	
0	2	45	54	10	4 x 20	4 x 20	-	4 x 20	-	2,5
1	3	70	75	10	6 x 28	4 x 28	4 x 28	6 x 28	5 x 28	5,5
2	2	100	100	10	8 x 36	6 x 36	5 x 28	8 x 36	5 x 36	12,0
25	2	120	135	20	10 x 50	8 x 50	8 x 50	10 x 50	8 x 50	24,0
30	3	160	175	20	12 x 70	10 x 63	8 x 63	12 x 70	10 x 70	48,0

Size	L 0	L 1	L 2	L 25	L 30
Oil volume (in dm^3)	0,1	0,3	0,6	1,2	2,5

Bevel Gearboxes KU/I, Model H, Technical Data

Ratio	Size	Version 70 Product No.	Version 80 Product No.	Permissible Output Torque T_2 in Nm** at Output Speed n_2 in min^{-1}							Max. Input Power P_1 in kW** at Input Speed n_1 in min^{-1}						
				50	250	500	750	1000	1500	3000	50	250	500	750	1000	1500	3000
1 : 1	0	*412 061 00	412 062 00	18	17	15	13	12	11	10	0,1	0,47	0,83	1,07	1,32	1,82	3,31
	1	*412 064 00	412 065 00	50	44	40	37	34	32	27	0,28	1,21	2,2	3,06	3,75	5,29	8,93
	2	*412 067 00	412 068 00	130	123	115	103	92	82	66	0,72	3,39	6,34	8,51	10,14	13,56	21,82
	25	*412 070 00	412 071 00	380	350	330	310	290	260	---	2,09	9,64	18,19	25,63	31,96	42,99	---
	30	412 073 00	412 074 00	750	710	620	555	510	450	---	4,13	19,56	34,17	45,88	56,21	74,4	---
	Size	**Product No.**	**Product No.**	**33**	**167**	**333**	**500**	**667**	**1000**	**2000**	**50**	**250**	**500**	**750**	**1000**	**1500**	**3000**
1,5 : 1	0	412 061 01	412 062 01	18	17	15	13	12	11	10	0,07	0,31	0,55	0,72	0,88	1,21	2,2
	1	412 064 01	412 065 01	45	40	37	35	32	29	25	0,16	0,74	1,36	1,93	2,35	3,2	5,51
	2	412 067 01	412 068 01	113	108	105	94	86	78	61	0,41	1,99	3,85	5,18	6,32	8,6	13,45
	25	412 070 01	412 071 01	355	330	315	295	280	252	185	1,29	6,07	11,56	16,26	20,59	27,78	40,78
	30	412 073 01	412 074 01	750	690	615	550	505	437	330	2,73	12,7	22,57	30,31	37,13	48,17	72,75
	Size	**Product No.**	**Product No.**	**25**	**125**	**250**	**375**	**500**	**750**	**1500**	**50**	**250**	**500**	**750**	**1000**	**1500**	**3000**
2 : 1	0	*412 061 02	412 062 02	18	17	15	13	12	11	10	0,05	0,23	0,41	0,54	0,66	0,91	1,65
	1	*412 064 02	412 065 02	37	36	34	32	31	27	23	0,1	0,5	0,94	1,32	1,71	2,23	3,8
	2	*412 067 02	412 068 02	107	98	92	86	81	73	56	0,29	1,35	2,54	3,55	4,46	6,03	9,26
	25	*412 070 02	412 071 02	355	320	300	280	270	245	170	0,98	4,41	8,27	11,57	14,88	20,25	28,11
	30	412 073 02	412 074 02	750	680	610	540	500	425	310	2,07	9,37	16,81	22,32	27,56	35,13	51,25
	Size	**Product No.**	**Product No.**	**17**	**83**	**167**	**250**	**333**	**500**	**1000**	**50**	**250**	**500**	**750**	**1000**	**1500**	**3000**
3 : 1	0	*412 061 03	412 062 03	14	13	13	12	12	11	10	0,03	0,12	0,24	0,33	0,44	0,61	1,1
	1	*412 064 03	412 065 03	37	36	34	32	31	27	23	0,07	0,33	0,63	0,88	1,14	1,49	2,54
	2	*412 067 03	412 068 03	110	95	90	87	82	74	58	0,21	0,87	1,66	2,40	3,01	4,08	6,39
	25	*412 070 03	412 071 03	305	280	260	250	245	230	190	0,57	2,56	4,79	6,89	8,99	12,68	20,94
	30	412 073 03	412 074 03	690	630	600	530	490	470	420	1,29	5,76	11,04	15,98	20,37	28,38	46,29
	Size	**Product No.**	**Product No.**	**12,5**	**62,5**	**125**	**187,5**	**250**	**375**	**750**	**50**	**250**	**500**	**750**	**1000**	**1500**	**3000**
4 : 1	1	412 064 04	412 065 04	37	36	34	32	31	27	23	0,05	0,25	0,47	0,66	0,85	1,12	1,9
	2	412 067 04	412 068 04	90	87	84	82	79	74	60	0,12	0,6	1,16	1,69	2,18	3,06	4,96
	25	412 070 04	412 071 04	280	270	260	250	240	220	180	0,39	1,86	3,58	5,17	6,61	9,09	14,88
	30	412 073 04	412 074 04	580	550	525	510	485	420	350	0,8	3,79	7,23	10,54	13,36	18,81	28,93
	Size	**Product No.**	**Product No.**	**10**	**50**	**100**	**150**	**200**	**300**	**600**	**50**	**250**	**500**	**750**	**1000**	**1500**	**3000**
5 : 1	1	412 064 05	412 065 05	37	36	34	32	31	27	23	0,04	0,2	0,37	0,53	0,68	0,89	1,52
	2	412 067 05	412 068 05	95	92	89	86	80	72	60	0,1	0,51	0,98	1,42	1,76	2,38	3,97
	25	412 070 05	412 071 05	280	270	250	240	225	215	180	0,32	1,49	2,76	3,97	4,96	7,11	11,9
	30	412 073 05	412 074 05	525	505	470	440	420	380	300	0,58	2,78	5,18	7,27	9,26	12,57	19,84
	Size	**Product No.**	**Product No.**	**8**	**42**	**83**	**125**	**167**	**250**	**500**	**50**	**250**	**500**	**750**	**1000**	**1500**	**3000**
6 : 1	1	412 064 06	412 065 06	33	30	29	29	29	27	23	0,03	0,14	0,27	0,4	0,53	0,74	1,25
	2	412 067 06	412 068 06	71	69	68	68	66	64	54	0,06	0,33	0,63	0,94	1,22	1,75	2,95
	25	412 070 06	412 071 06	210	199	187	176	164	143	129	0,18	0,92	1,72	2,43	3,01	3,95	7,09

* Gearboxes in stock (without ventilation).

** Transmission ratio for gearing down. For gearing up the values for 1:1 apply. In addition the heating up process has to be considered (see page 673).

Max. Speed in min^{-1} for Gearbox without Ventilation, at the Output Shaft, i = 1:1 to 6:1

For version 70 and horizontal mounting position. For version 80 these values have to be halved. Values for other OT and other mounting positions on request.

Operating Time	Size 0	Size 1*	Size 2*	Size 25*	Size 30*
ED 100 %	1100	700	600	400	300
ED 30 %	1900	1300	1000	700	500

* From size 1 available with ventilation against surcharge.

Permissible Radial and Axial Loads at shaft d_1

Gearbox Size	T Nm	n_1 [min^{-1}] - F_R [N] 3000	1000	500	250	100	50
0	< 12	180	250	300	350	450	550
	> 12	150	210	250	290	380	460
1	< 30	300	400	470	580	700	800
	> 30	250	330	390	490	590	670
2	< 80	470	620	720	900	1150	1400
	> 80	390	520	600	750	960	1170
25	< 220	1200	1600	1900	2200	2850	3300
	> 220	1000	1340	1590	1840	2380	2750
30	< 500	2200	1700	3200	3900	5000	6200
	> 500	1840	1420	2670	3250	4170	5170

The maximum permiss. radial forces stated in the table are calculated for the centre of the output shaft end, also calculating in the speed and torque. The values were calculated for the most unfavourable load direction. Precise calculation of load and rotational direction may lead to higher permissible loads for the shaft – please ask us.

Permissible Radial and Axial Loads at shaft d_2

Gearbox Size	T Nm	n_1 [min^{-1}] - F_R [N] 3000	1000	500	250	100	50
0	< 12	300	400	500	650	750	900
	> 12	250	330	420	540	630	750
1	< 30	500	660	800	950	1250	1500
	> 30	420	550	670	790	1040	1250
2	< 80	900	1200	1400	1700	2100	2500
	> 80	750	1000	1170	1420	1750	2080
25	< 220	2300	3100	3600	4300	5300	7000
	> 220	1920	2580	3000	3580	4420	5830
30	< 500	3600	4700	5400	7200	9000	11000
	> 500	3000	3900	4500	6000	7500	9200

Axial loads F_A can be absorbed, without need for further calculation, up to about 50% of the permiss. radial forces. If the axial load exceeds this value considerably or if combined loads of F_R and F_A occur – please ask us.

Dimensions Table Bevel Gearboxes KU/I Model H

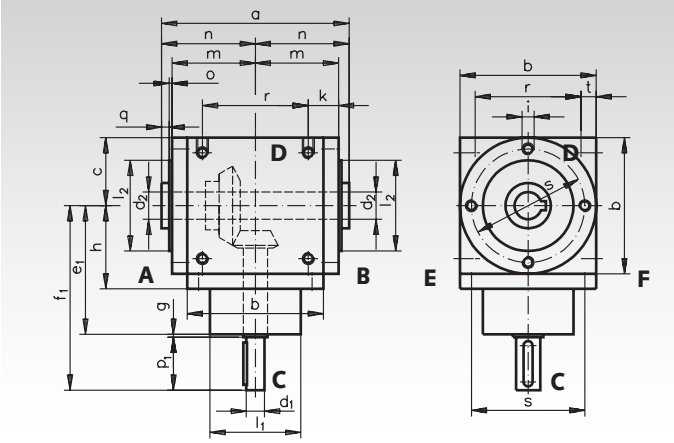

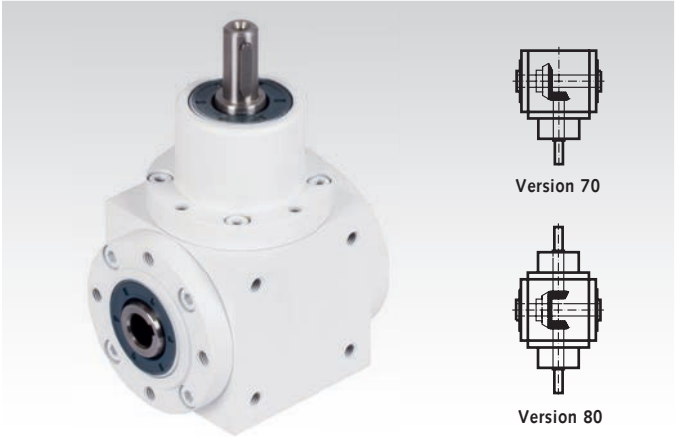

Shaft ends for all types: Tolerance = j_6; thread alignment according to DIN 332-2 see page 820. Keyways according to DIN 6885/1.
Tolerance of hollow shaft bore = H7. The hollow shaft is always the slower running one.
Threaded holes for mounting on all sides of the gearbox as standard. Thread depth of mounting holes = 2 x thread diameter or the thickness of the flange.

Dimensions at i = 1 : 1 to 6 : 1, standard power input at d_1 (intermediate transmission ratios on request).

Size	a mm	b mm	c mm	d_1^{j6} mm				d_2^{H7} mm	e_1 mm	
	1 : 1 to 6 : 1			1 : 1 1,5 : 1 2 : 1	3 : 1	4 : 1	5 : 1 6 : 1	1 : 1 to 6 : 1	1 : 1 bis 3 : 1	4 : 1 5 : 1 6 : 1
0	92	65	32,5	12	12	-	-	12	72	-
1	124	90	45	18	12	12	12	18	85	95
2	170	120	60	25	20	20	15	25	115	125
25	206	160	80	35	28	24	24	35	150	170
30	250	200	100	42	35	35	28	42	190	190

Size	f_1 mm				g mm	h mm	i mm	k mm	l_1^{f7} mm			l_2^{f7} mm	m mm	n mm
	1 : 1 1,5 : 1 2 : 1	3 : 1	4 : 1	5 : 1 6 : 1					1 : 1 1,5 : 1 2 : 1	3 : 1 4 : 1	5 : 1 6 : 1			
0	100	100	-	-	2	42	M6	19,5	44	44	-	44	42	46
1	122	122	132	132	2	55	M8	20	60	60	60	60	55	62
2	162	162	172	162	2	75	M10	27	80	80	70	80	77	85
25	213	212	232	232	2	95	M12	35	110	100	100	110	95	103
30	273	261	261	261	3	120	M12	37	120	120	110	120	117	125

Size	o mm	p_1 mm			q mm	r mm	s mm	t mm
	1 : 1 to 6 : 1	1 : 1 1,5 : 1 2 : 1	3 : 1 4 : 1	5 : 1 6 : 1	1 : 1 to 6 : 1			
0	2	26	26	-	2	45	54	10
1	2	35	35	35	5	70	75	10
2	3	45	45	35	5	100	100	10
25	3	60	60	60	5	120	135	20
30	3	80	68	68	5	160	175	20

Size	Feather Key Size at d_1 mm			Keyway Size in Hollow Shaft mm	Weight kg
	1 : 1 1,5 : 1 2 : 1	3 : 1 4 : 1	5 : 1 6 : 1		
0	4 x 20	4 x 20	-	4JS9	2,1
1	6 x 28	4 x 28	4 x 28	6JS9	5,5
2	8 x 36	6 x 36	5 x 28	8JS9	12,0
25	10 x 50	8 x 50	8 x 50	10JS9	24,0
30	12 x 70	10 x 63	8 x 63	12JS9	48,0

Size	H0	H 1	H 2	H 25	H 30
Oil Volume (in dm³)	0,1	0,3	0,6	1,2	2,5

Worm Gear Units G/II

General data: **Version A:** Centre distance 31 mm.
Version B: Centre distance 33 mm.

Housing: Aluminium permanent-mould casting, fully sealed against oil leaks and protected against dust, can be mounted in any position.

Gear set: Worms hardened and ground, worm gears made from special bronze.

Bearing System: Input and output shaft with roller bearing.

Lubrication: As a special gearbox oil has been used, in most applications no relubrication or change is required.

Input shaft is the smaller shaft d_1.
The permiss. output torque refers to shaft d_2.



Ordering details: e.g.: Type, Version, Ratio, Product No.

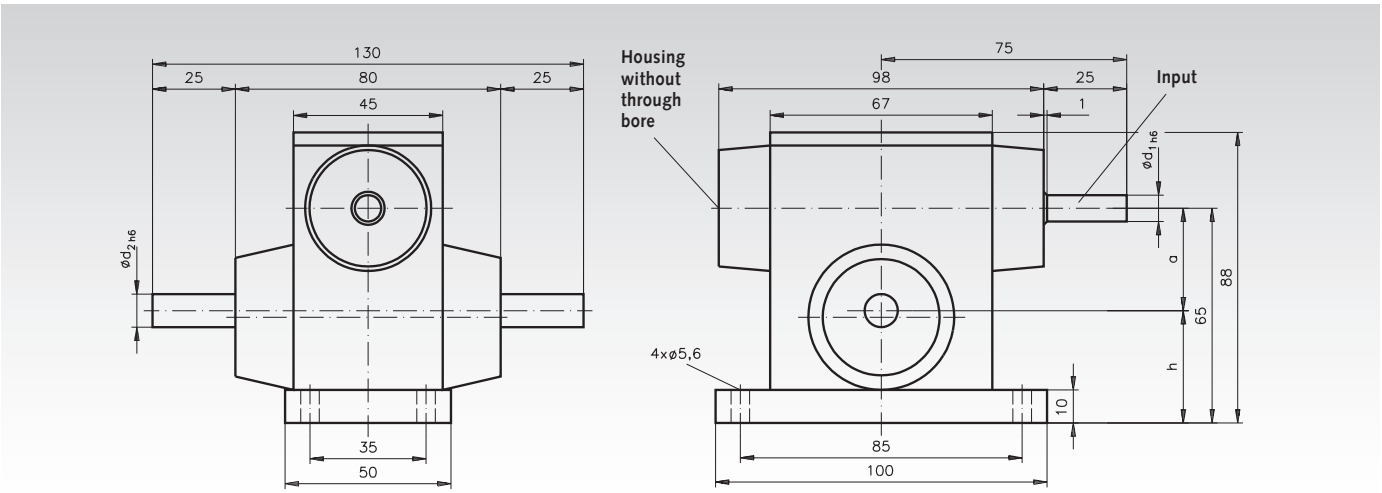

Version A (Load Bearing Capacity of the Output Shaft Radial = 100 N, Axial = 60 N)

Product No.	Ratio i	Centre Distance a mm	d_1 mm	d_2 mm	h mm	max. Output Torque Nm	Weight kg
420 005 00	5 : 1	31	8	10	34	10	1,05
420 007 00	7 : 1	31	8	10	34	10	1,05
420 010 00	10 : 1	31	8	10	34	10	1,05
420 012 00	12 : 1	31	8	10	34	12	1,05
420 015 00	15 : 1	31	8	10	34	11	1,05
420 018 00	18 : 1	31	8	10	34	10	1,05
420 020 00	20 : 1	31	8	10	34	10	1,05
420 024 00	24 : 1	31	8	10	34	9	1,05
420 030 00	30 : 1	31	8	10	34	10	1,05
420 038 00	38 : 1	31	8	10	34	11	1,05
420 050 00	50 : 1	31	8	10	34	9	1,05
420 075 00	75 : 1	31	8	10	34	7	1,05

Version B (Load Bearing Capacity of the Output Shaft Radial = 150 N, Axial = 100 N)

Product No.	Ratio i	Centre Distance a mm	d_1 mm	d_2 mm	h mm	max. Output Torque Nm	Weight kg
420 107 00	7 : 1	33	10	12	32	12	1,15
420 111 00	11,33 : 1	33	10	12	32	13	1,15
420 115 00	15 : 1	33	10	12	32	13	1,15
420 117 00	17 : 1	33	10	12	32	14	1,15
420 120 00	20 : 1	33	10	12	32	13	1,15
420 124 00	24 : 1	33	10	12	32	13	1,15
420 130 00	30 : 1	33	10	12	32	13	1,15
420 132 00	32 : 1	33	10	12	32	14	1,15
420 138 00	38 : 1	33	10	12	32	14	1,15
420 156 00	56 : 1	33	10	12	32	10	1,15
420 175 00	75 : 1	33	10	12	32	9	1,15

All shaft diameters with tolerance h6.
Dimensions without stated tolerance are non binding.

Worm Gear Units KES

Angular drives with hollow output shaft for high torques at very low dimensions. Suitable in a wide variety of applications.
One size with center distance 20mm, in 7 ratios.

Housing: Aluminium, silver anodized. Sealed against lubricant leaks, protected against dust. Can be mounted in any position. Worm shaft in vertically position not recommended for continuous operation.
Gearing: Worm from steel, wheel from special brass.
Bearing: Ball bearings with rubber seal RS.
Lubrication: Maintenance free grease lubrication.
Angular backlash: +/-1°. **Operating time:** 20% at 5 min.
Life time: approx. 1,000 hours at max. performance at speed 500 min^{-1} and operating time 20%.
Permiss. operating temperature: -20° to +60°C.

Ordering Details: e.g.: Product No. 420 020 13 Bevel Gearbox KES Size 1

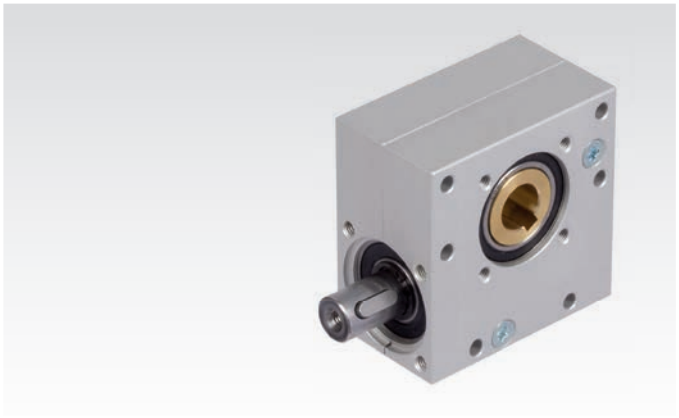

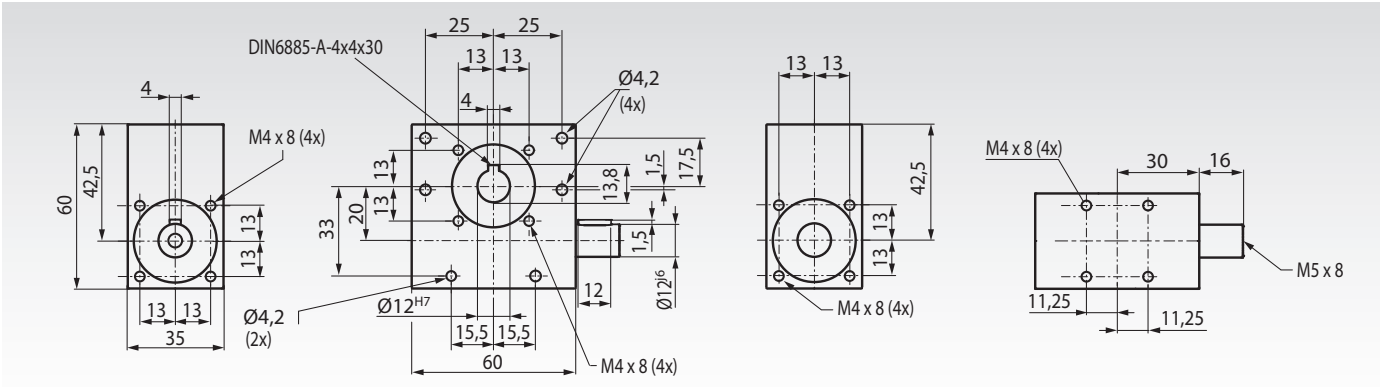

Performance Data

Product No.	Ratio i	Self-locking	Permittable Output Torque at Speed 100 min^{-1} Nm	500 min^{-1} Nm	1.000 min^{-1} Nm	Permittable Input Power at Speed 100 min^{-1} W	500 min^{-1} W	1.000 min^{-1} W	Efficiency approx. η	Shaft Load F_R* N	F_A** N	Weight g
420 020 13	13 : 1	no	15,0	13,0	11,0	20,8	90,3	152,8	0,58	200	200	422
420 020 15	15 : 1	no	12,0	10,0	8,0	15,5	64,6	103,4	0,54	250	250	425
420 020 18	18 : 1	no	11,0	9,0	7,0	12,5	51,3	79,8	0,51	250	250	426
420 020 23	23 : 1	no	10,0	8,0	6,0	9,11	36,4	54,6	0,50	250	250	428
420 020 30	30 : 1	no	8,5	7,0	5,5	6,59	27,1	42,7	0,45	350	350	438
420 020 40	40 : 1	yes	5,5	4,8	4,0	3,89	17,0	28,3	0,37	400	400	426
420 020 65	65 : 1	yes	4,5	3,8	3,0	2,34	9,9	15,6	0,31	500	500	432

* Permiss. radial force at F_A=0.
** Permiss. axial force at F_R=0.

Rotational Sense (Rot. direction interchangeable)

The gearset is left-handed.

Output:
Worm wheel on hollow shaft

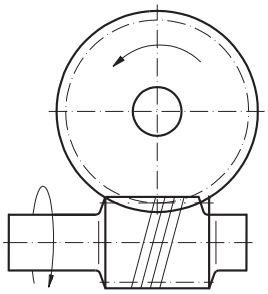

Input:
Worm shaft

Torque Conversion

Output torque = Input Torque x Efficiency x Transmission

$$\text{Input torque} = \frac{\text{Output torque}}{\text{Efficiency x Ratio}}$$

$$\text{Power } P = \frac{M \times n}{9550}$$

$$\text{Torque } M = \frac{9550 \times P}{n}$$

M = Torque [Nm]
P = Power [kW]
n = Speed [min^{-1}]

Worm Gear Units H/I

Housing: Aluminium die-cast, with connecting threads on both input and output sides. With mounting holes on all other sides.
Worm shaft: hardened and ground.
Worm Gear: Bronze, on cast iron hub.
Lubrication: synthetic oil (lubricated for life).

Lightweight, high quality model range, 5 sizes, centre distance 31.5, 40, 50, 63 and 75 mm. Size 90 and 110 on request. The gearboxes can be used without ventilation and **independent from the mounting position**.

Output shaft push-in type: The basic gearbox version has a hollow shaft. They can, however, also be supplied with a push in type output shaft (single sided, to be used left and right, or double sided).
These output shafts have their own product No. and have to be ordered separately.

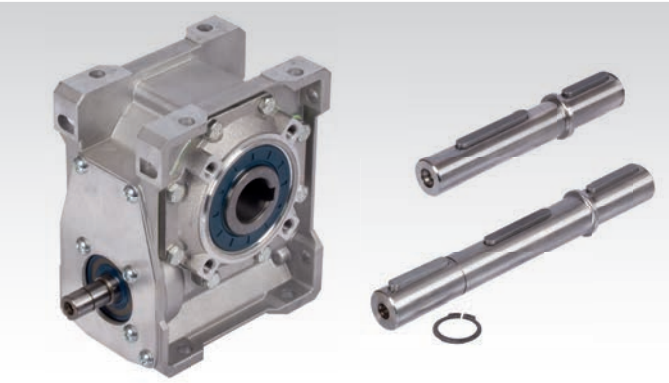

a = Centre distance
i = Ratio
n_1, n_2 = Input/Output speed
T_2 = Output torque
$P_{1\ perm.}$ = Input power
η = Operating efficiency

Ordering Details: e.g.: Product No., Type, Size, Ratio
If required: Output Shaft Single Sided (or Double Sided), Prod No., Size

Product No.	a mm	i_{ist}	$n_{1max.}$ min^{-1}	n_2 min^{-1}	$T_{2perm.}$ Nm	$P_{1perm.}$ kW	η	Weight kg	Accessories * Product No. Single-Sided Output Shaft	Accessories * Product No. Double-Sided Output Shaft
422 031 07	31,5	7,5	1400	187	21	0,49	0,84	1,4	**422 031 01**	**422 031 02**
422 031 10	31,5	10	1400	140	22	0,40	0,82	1,4	**422 031 01**	**422 031 02**
422 031 15	31,5	15	1400	93	22	0,28	0,77	1,4	**422 031 01**	**422 031 02**
422 031 20	31,5	20	1400	70	19	0,19	0,72	1,4	**422 031 01**	**422 031 02**
422 031 25	31,5	25	1400	56	21	0,18	0,69	1,4	**422 031 01**	**422 031 02**
422 031 30	31,5	30	1400	47	20	0,15	0,66	1,4	**422 031 01**	**422 031 02**
422 031 40	31,5	40	1400	35	21	0,13	0,59	1,4	**422 031 01**	**422 031 02**
422 031 50	31,5	50	1400	28	19	0,10	0,55	1,4	**422 031 01**	**422 031 02**
422 031 65	31,5	65	1400	22	20	0,09	0,51	1,4	**422 031 01**	**422 031 02**
422 031 80	31,5	80	1400	18	17	0,06	0,48	1,4	**422 031 01**	**422 031 02**
422 031 11	31,5	100	1400	14	14	0,05	0,45	1,4	**422 031 01**	**422 031 02**
422 040 07	40	7,5	1400	187	40	0,92	0,85	2,4	**422 040 01**	**422 040 02**
422 040 10	40	10	1400	140	41	0,73	0,83	2,4	**422 040 01**	**422 040 02**
422 040 15	40	15	1400	93	42	0,52	0,79	2,4	**422 040 01**	**422 040 02**
422 040 20	40	20	1400	70	40	0,39	0,76	2,4	**422 040 01**	**422 040 02**
422 040 25	40	25	1400	56	35	0,29	0,72	2,4	**422 040 01**	**422 040 02**
422 040 30	40	30	1400	47	41	0,29	0,68	2,4	**422 040 01**	**422 040 02**
422 040 40	40	40	1400	35	38	0,22	0,64	2,4	**422 040 01**	**422 040 02**
422 040 50	40	50	1400	28	38	0,19	0,59	2,4	**422 040 01**	**422 040 02**
422 040 65	40	65	1400	22	35	0,15	0,54	2,4	**422 040 01**	**422 040 02**
422 040 80	40	80	1400	18	33	0,12	0,52	2,4	**422 040 01**	**422 040 02**
422 040 11	40	100	1400	14	28	0,08	0,49	2,4	**422 040 01**	**422 040 02**
422 050 07	50	7,5	1400	187	70	1,60	0,86	4,0	**422 050 01**	**422 050 02**
422 050 10	50	10	1400	140	73	1,30	0,84	4,0	**422 050 01**	**422 050 02**
422 050 15	50	15	1400	93	74	0,90	0,80	4,0	**422 050 01**	**422 050 02**
422 050 20	50	20	1400	70	75	0,71	0,78	4,0	**422 050 01**	**422 050 02**
422 050 25	50	25	1400	56	65	0,51	0,74	4,0	**422 050 01**	**422 050 02**
422 050 30	50	30	1400	47	66	0,46	0,71	4,0	**422 050 01**	**422 050 02**
422 050 40	50	40	1400	35	69	0,38	0,67	4,0	**422 050 01**	**422 050 02**
422 050 50	50	50	1400	28	70	0,33	0,62	4,0	**422 050 01**	**422 050 02**
422 050 65	50	65	1400	22	64	0,25	0,58	4,0	**422 050 01**	**422 050 02**
422 050 80	50	80	1400	18	60	0,20	0,54	4,0	**422 050 01**	**422 050 02**
422 050 11	50	100	1400	14	55	0,16	0,51	4,0	**422 050 01**	**422 050 02**
422 063 07	63	7,5	1400	187	120	2,70	0,87	6,6	**422 063 01**	**422 063 02**
422 063 10	63	10	1400	140	127	2,20	0,85	6,6	**422 063 01**	**422 063 02**
422 063 15	63	15	1400	93	130	1,60	0,81	6,6	**422 063 01**	**422 063 02**
422 063 20	63	20	1400	70	144	1,30	0,80	6,6	**422 063 01**	**422 063 02**
422 063 25	63	25	1400	56	118	0,90	0,77	6,6	**422 063 01**	**422 063 02**
422 063 30	63	30	1400	47	142	0,95	0,73	6,6	**422 063 01**	**422 063 02**
422 063 40	63	40	1400	35	150	0,79	0,69	6,6	**422 063 01**	**422 063 02**
422 063 50	63	50	1400	28	122	0,55	0,65	6,6	**422 063 01**	**422 063 02**
422 063 65	63	65	1400	22	122	0,45	0,61	6,6	**422 063 01**	**422 063 02**
422 063 80	63	80	1400	18	113	0,36	0,58	6,6	**422 063 01**	**422 063 02**
422 063 11	63	100	1400	14	102	0,28	0,53	6,6	**422 063 01**	**422 06302**
422 075 07	75	7,5	1400	187	180	4,0	0,87	11	**422 075 01**	**422 075 02**
422 075 15	75	15	1400	93	202	2,4	0,83	11	**422 075 01**	**422 075 02**
422 075 20	75	20	1400	70	226	2,0	0,81	11	**422 075 01**	**422 075 02**
422 075 30	75	30	1400	47	220	1,5	0,74	11	**422 075 01**	**422 075 02**
422 075 50	75	50	1400	28	211	0,92	0,67	11	**422 075 01**	**422 075 02**
422 075 65	75	65	1400	22	195	0,70	0,63	11	**422 075 01**	**422 075 02**
422 075 11	75	100	1400	14	162	0,43	0,56	11	**422 075 01**	**422 075 02**

Dimensions table page 684. For gearbox size 75 , i = 10:1, 25:1, 40:1 and 80:1 available on request.

* More details see page 683.

Push-In Type Output Shafts, Single Sided

Material: Steel.

To change the gearboxes H/I over from hollow shaft to solid shaft. The shaft is only pushed in and secured with the enclosed cover disc and mounting screw. The shaft can be pushed in either left or right.

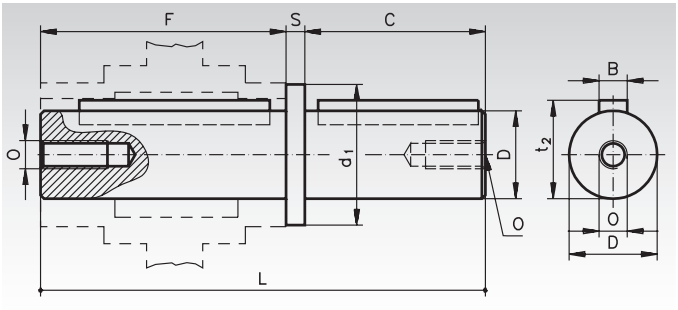

Ordering details: e.g.: Prod. No. 422 031 01, Push-In Type Output Shaft, Single-Sided, Gearbox Size 031

Product No.	Gearbox Size	B mm	C mm	D^{h6} mm	d_1 mm	F mm	L mm	O mm	S mm	t_2 mm	Weight kg
422 031 01	031	5	30	14	18,5	62	94,5	M6x16	2,5	16,3	0,16
422 040 01	040	6	40	18	23,5	77	120,0	M6x16	3,0	20,8	0,27
422 050 01	050	8	50	25	31,5	90	143,5	M8x22	3,5	28,3	0,59
422 063 01	063	8	50	25	31,5	111	165,0	M8x22	4,0	28,3	0,68
422 075 01	075	8	60	28	34,5	119	183,0	M8x22	4,0	31,3	1,05

Push-In Type Output Shafts, Double Sided

Material: Stahl.

To change the gearboxes H/I over from hollow shaft to double-sided solid shaft. The shaft is only pushed in and secured with the enclosed retaining ring.

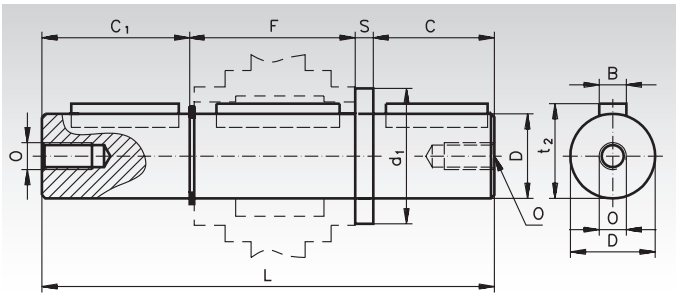

Ordering details: e.g.: Prod. No. 422 031 02, Push-In Type Output Shaft, Double Sided, Gearbox Size 031

Product No.	Gearbox Size	B mm	C mm	C_1 mm	D^{h6} mm	d_1 mm	F mm	L mm	O mm	S mm	t_2 mm	Weight kg
422 031 02	031	5	30	29,0	14	18,5	64,0	125,5	M6x16	2,5	16,3	0,18
422 040 02	040	6	40	38,8	18	23,5	79,2	161,0	M6x16	3,0	20,8	0,32
422 050 02	050	8	50	50,0	25	31,5	93,2	196,7	M8x22	3,5	28,3	0,77
422 063 02	063	8	50	48,8	25	31,5	113,2	216,0	M8x22	4,0	28,3	0,98
422 075 02	075	8	60	58,8	28	34,5	121,0	244,0	M8x22	4,0	31,3	1,49

Permissible Radial and Axial Forces

The values are calculated for the centre of the output shaft end, also calculating in the transmission ratio. F_R is the max. radial force for $F_A = 0$.
F_A is the max. permissible axial force for $F_R = 0$.

Gearbox Size	i = 7.5		i = 10		i = 15		i = 20		i = 25		i = 30		i = 40		i = 50		i = 65		i = 80		i = 100	
	F_R N	F_A N	F_R N	F_A N	F_R N	F_A N	F_R N	F_A N	F_R N	F_A N	F_R N	F_A N	F_R N	F_A N	F_R N	F_A N	F_R N	F_A N	F_R N	F_A N	F_R N	F_A N
031	750	150	775	115	800	160	850	170	900	180	950	190	1000	200	1100	220	1200	240	1300	260	1450	290
040	1150	230	1200	240	1250	250	1350	270	1500	300	1600	320	1700	340	1800	360	1950	390	2100	420	2300	460
050	1200	240	1400	280	1600	320	1900	380	2100	420	2500	500	2800	560	3000	600	3200	640	3200	640	3200	640
063	1250	250	1700	340	1750	350	2000	400	2500	500	2700	540	3000	600	3250	650	3500	700	3700	740	3900	780
075	1300	260	1900	380	2300	460	2500	500	3000	600	3200	640	3500	700	3800	760	4100	820	4400	880	4700	940

Lubricant Volume in Litre (dm^3)

The gearboxes are lubricated for life using synthetic oil. Under normal operating conditions, no oil change is required. The lubricant volume is identical for all mounting positions.

Size	031	040	050	063	075
Oil quantity	0.05	0.07	0.15	0.4	0.6

Dimensions Table Worm Gear Units H/I

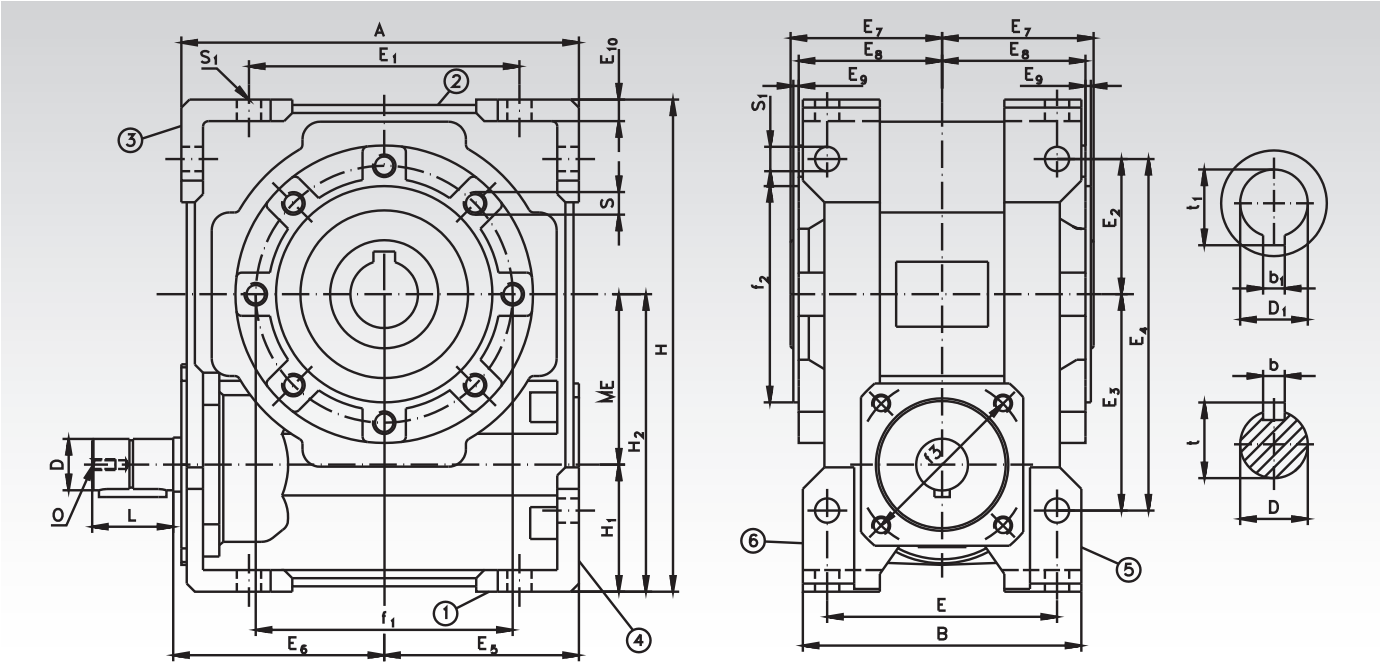

Size	Centre distance	Shaft dimensions							Housing dimensions							
	mm	D^{j6} mm	b mm	t mm	O mm	D_1^{H7} mm	b_1 mm	t_1 mm	A mm	B mm	E mm	E_1 mm	E_2 mm	E_3 mm	E_4 mm	E_5 mm
031	31,5	9	3	10,2	M4x10	14	5	16,3	80	56	44	54	27	44	71	40
040	40,0	11	4	12,5	M4x12	18	6	20,8	105	71	60	70	35	55	90	50
050	50,0	14	5	16	M5x13	25	8	28,3	125	85	70	80	40	64	104	60
063	63,0	19	6	21,5	M8x20	25	8	28,3	147	103	85	100	50	80	130	72
075	75,0	24	8	27	M8x20	28	8	31,3	176	112	90	120	60	93	153	86

Size	E_6 mm	E_7 mm	E_8 mm	E_9 mm	E_{10} mm	f_1* mm	f_2^{h8} mm	f_3 mm	H mm	H_1 mm	H_2 mm	L mm	ME mm	S mm	S_1 mm	Weight kg
031	44,5	31,5	29,0	1,5	5,5	65	55	35,4	97	25,5	57	15	31,5	M6x8	6,5	1,4
040	57,5	39	36,5	1,5	6,0	75	60	42,4	125	35	75	20	40,0	M6x10	6,5	2,4
050	67,5	46	43,5	1,5	7,0	85	70	53,7	150	40	90	25	50,0	M8x10	8,5	4,0
063	77,5	56	53,0	2,0	8,0	95	80	60,8	182	47	110	30	63,0	M8x14	9,0	6,6
075	95,0	60	57,0	2,0	10	115	95	70,7	219,5	58,5	133,5	40	75,0	M8x14	11	11,1

Mounting Holes on the Drive Side

Size 31: 4 Threads M5
Size 40: 4 Threads M5
Size 50: 4 Threads M6
Size 63: 4 Threads M6
Size 75: 4 Threads M8

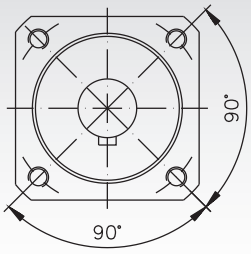

Ø of circle with holes: See size f_3 in table.

Mounting Holes on the Output Side

Size 031
4 Threads M6 x 8

Size 040
4 Threads M6 x 10

Size 050
4 Threads M8 x 10

Size 063 and 075
8 Threads M8 x 14

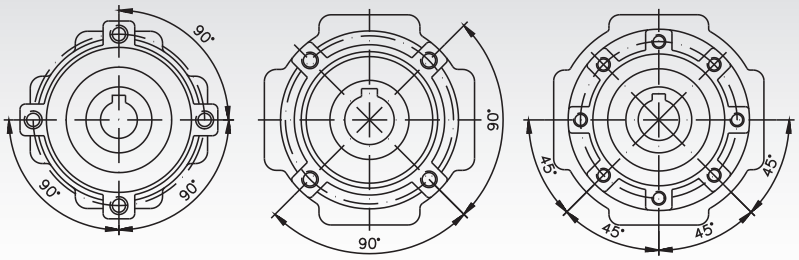

Ø of circle with holes: See size f_1 in table.

Worm Gear Units ZM/I

General data: Universal heavy-duty gearboxes.
4 sizes, centre distance 40, 50, 63 and 80 mm.
Centre distance 100 - 315 mm available on request.

Housing: High-quality grey cast iron, all sides machined and with mounting holes on 5 sides.

Gearing: 13 ratios from 5 to 83 : 1; worm shaft hardened and ground. Worm gear made from special centrifugally cast bronze.

Efficiency factor: The efficiency factors stated in the selection tables are guideline values for properly run-in and lubricated gearboxes at operating temperature with nominal load and driving worm shaft. Proper running in is a crucial factor influencing the lifetime of the gearbox. The starting efficiency factor (η_A) is, as the operating efficiency factor (h), depending on the lead angle.

Self-locking: Self-locking only occurs in worm gear units, when the unit cannot be driven from the output side. Worms with 4 and 6 threads sometimes permit transmission ratios for gearing up (i = 5 : 1 to 13.3 : 1). If a gearbox must be implicitly self-locking, or must implicitly not be self-locking, we urge you to contact us.
Ratio 72:1 is static and dynamic self-locking.

Bearing system: All gearbox shafts with generously dimensioned roller bearings.

Lubrication: The gearboxes are lubricated for life using synthetic oil. Under normal operating conditions, no maintenance is required. The housing should be checked for leakages at an interval of approx. 2 years.

Ventilation: Size (centre distance) 40 is supplied without ventilation. With the other gearboxes, the sealing plug has to be exchanged with the separately packed venting filter.

Version A



Version HL



Venting Filter (VF)

Size	A mm	B mm	C mm	D mm	E mm	F mm
40*	-	-	-	-	-	-
50	50	20	33	22	58	25
63	62,5	27,5	37	22	67	25
80	77,5	32,5	57	22	82	25

* Size 40 without Ventilation.

Lubrication Volume in Litre (dm^3)

Size	Mounting Position 1	2	3 + 4	5 + 6
40	0,20	0,25	0,20	0,20
50	0,30	0,60	0,45	0,45
63	0,50	1,10	0,70	0,80
80	0,90	2,10	1,40	1,60

The standard lubrication volume is calculated for mounting position 2. For other mounting positions and high permanent speeds it might have to be reduced, to avoid oil leakages.

Position of the Oil Fittings Size 50 - 80

Mounting Position 1

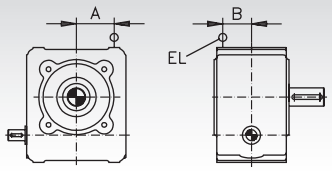

Mounting Position 2

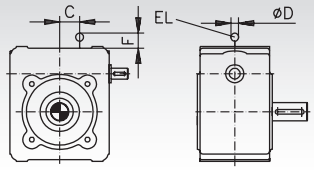

Mounting Position 3

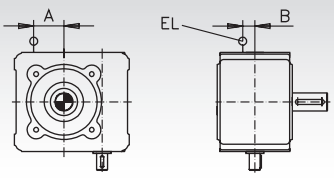

Mounting Position 4

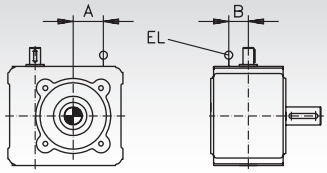

Mounting Position 5

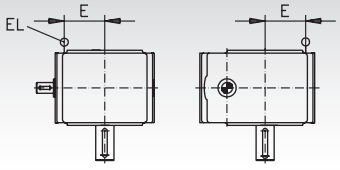

Mounting Position 6

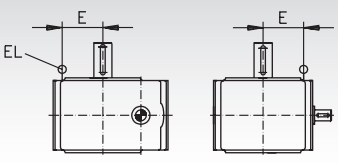

Mounting Sides

The worm gear units can be mounted in any position and the shaft ends can be positioned to your requirements.

Sizes 40 - 80

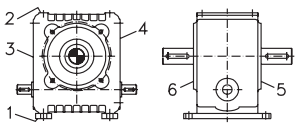

The input power $P_{1\ perm}$ and output torques $T_{2\ perm}$ listed in the selection tables are based on shock-free continuous operation, an operating time of 8 hours/day, 3 starts per hour, operating time (OT) = 100% and 20°C ambient temperature. The maximum output torques T_{2max} may frequently be reached in short-term load peaks but they must not be exceeded. With an operating time under 90%, the permissible gearbox output can usually be increased.

i_n, i_{ist} = nominal ratio, real ratio.
n_1, n_2 [min^{-1}] = input speed, output speed.
$P_{1\ perm}$ [kW] = permittable input power.
$T_{2\ perm}$ [Nm] = permittable output torque (permanent).
T_{2max} [Nm] = maximum output torque (peak).
η = operating efficiency.

Dimensions Table Page 690.

Version with foot mounting brackets or shafts on both sides on request.

Version A Output Side 5 Product No.	Version A Output Side 6 Product No.	Version HL Hollow Shaft Product No.	Ratio i =	n_1 min^{-1}	n_2 min^{-1}	$P_{1\ perm}$ kW	$T_{2\ perm}$ Nm	T_{2max} Nm	η
421 001 00	**421 001 01**	**421 003 00**	4,83 : 1	1500	300	1,77	52	73	0,94
			*29/6	1000	200	1,24	54	73	0,94
				500	100	0,69	59	73	0,91
				10	2	0,02	73	73	0,86
421 001 02	**421 001 03**	**421 003 01**	7,25 : 1	1500	200	1,29	55	83	0,92
			*29/4	1000	133	0,91	57	83	0,91
				500	67	0,50	62	83	0,88
				10	1,3	0,01	83	83	0,82
421 001 04	**421 001 05**	**421 003 02**	9,75 : 1	1500	150	0,77	43	77	0,90
			*39/4	1000	100	0,55	45	77	0,89
				500	50	0,32	50	77	0,87
				10	1	0,01	70	77	0,82
421 001 06	**421 001 07**	**421 003 03**	13,0 : 1	1500	113	0,45	32	67	0,87
			*52/4	1000	75	0,32	34	67	0,86
				500	38	0,18	39	67	0,85
				10	0,75	0,01	55	67	0,82
421 001 08	**421 001 09**	**421 003 04**	14,5 : 1	1500	100	0,77	61	97	0,86
			*29/2	1000	67	0,54	63	97	0,84
				500	33	0,32	72	97	0,80
				10	0,67	0,01	97	97	0,73
421 001 10	**421 001 11**	**421 003 05**	19,5 : 1	1500	75	0,49	50	90	0,83
			*39/2	1000	50	0,35	53	90	0,86
				500	25	0,20	58	90	0,78
				10	0,5	0,01	82	90	0,72
421 001 12	**421 001 13**	**421 003 06**	26,0 : 1	1500	57	0,29	38	80	0,80
			*52/2	1000	38	0,21	40	80	0,77
				500	19	0,12	45	80	0,75
				10	0,38	0,004	65	80	0,72
421 001 14	**421 001 15**	**421 003 07**	29,0 : 1	1500	50	0,45	63	107	0,75
			*29/1	1000	33	0,33	65	107	0,72
				500	17	0,20	75	107	0,67
				10	0,33	0,01	107	107	0,58
421 001 16	**421 001 17**	**421 003 08**	39,0 : 1	1500	38	0,34	61	99	0,72
			*39/1	1000	25	0,25	64	99	0,69
				500	13	0,15	71	99	0,65
				10	0,25	0,005	99	99	0,58
421 001 18	**421 001 19**	**421 003 09**	52,0 : 1	1500	28	0,21	46	88	0,66
			*52/1	1000	19	0,15	48	88	0,65
				500	9,4	0,09	55	88	0,62
				10	0,19	0,003	74	88	0,58
421 001 20	**421 001 21**	**421 003 10**	63,0 : 1	1500	24	0,20	48	72	0,60
			*63/1	1000	16	0,15	51	72	0,58
				500	8,1	0,09	56	72	0,54
				10	0,16	0,002	57	72	0,48
421 001 24	**421 001 25**	**421 003 12**	72,0 : 1	1500	21	0,18	46	62	0,55
			*72/1	1000	14	0,13	46	62	0,52
				500	6,9	0,07	46	62	0,47
				10	0,14	0,002	46	62	0,41
421 001 26[1)]	**421 001 27**[1)]	**421 003 13**[1)]	72,0 : 1	100	1,39	0,02	46	62	0,44
			*72/1 optimized for manual operation[1)]	10	0,14	0,002	46	62	0,41
421 001 22	**421 001 23**	**421 003 11**	82,0 : 1	1500	18	0,13	37	64	0,54
			*82/1	1000	12	0,09	38	64	0,52
				500	6	0,05	38	64	0,49
				10	0,12	0,001	38	64	0,46

* Example: Worm gear number of teeth 29 / worm shaft 6 threads.

[1)] This implicity self-locking version is optimezed for hand operation (special worm surface and special oil).

Worm Gear Units ZM/I, Technical Data, Size 50

The input power $P_{1\ perm}$ and output torques $T_{2\ perm}$ listed in the selection tables are based on shock-free continuous operation, an operating time of 8 hours/day, 3 starts per hour, operating time (OT) = 100% and 20°C ambient temperature. The maximum output torques T_{2max} may frequently be reached in short-term load peaks but they must not be exceeded. With an operating time under 90%, the permissible gearbox output can usually be increased.

i_n, i_{ist} = nominal ratio, real ratio.
n_1, n_2 [min^{-1}] = input speed, output speed.
$P_{1\ perm}$ [kW] = permittable input power.
$T_{2\ perm}$ [Nm] = permittable output torque (permanent).
T_{2max} [Nm] = maximum output torque (peak).
η = operating efficiency.

Dimensions Table Page 690.

Version with foot mounting brackets or shafts on both sides on request.

Version A		Version HL							
Output Side 5 Product No.	Output Side 6 Product No.	Hollow Shaft Product No.	Ratio i =	n_1 min^{-1}	n_2 min^{-1}	$P_{1\ perm}$ kW	$T_{2\ perm}$ Nm	T_{2max} Nm	η
421 011 00	**421 011 01**	**421 013 00**	4,83 : 1	1500	300	3,71	109	144	0,95
			*29/6	1000	200	2,58	113	144	0,95
				500	100	1,40	120	144	0,93
				10	2	0,04	144	144	0,86
421 011 02	**421 011 03**	**421 013 01**	7,25 : 1	1500	200	2,60	113	164	0,94
			*29/4	1000	133	1,82	117	164	0,93
				500	67	1,00	125	164	0,90
				10	1,3	0,03	164	164	0,83
421 011 04	**421 011 05**	**421 013 02**	9,5 : 1	1500	150	1,62	91	150	0,92
			*38/4	1000	100	1,14	94	150	0,91
				500	50	0,63	102	150	0,88
				10	1	0,02	139	150	0,82
421 011 06	**421 011 07**	**421 013 03**	12,75 : 1	1500	113	0,82	60	107	0,89
			*51/4	1000	75	0,58	62	107	0,88
				500	38	0,32	67	107	0,86
				10	0,75	0,01	107	107	0,82
421 011 08	**421 011 09**	**421 013 04**	14,5 : 1	1500	100	1,57	128	194	0,88
			*29/2	1000	67	1,13	136	194	0,86
				500	33	0,63	145	194	0,83
				10	0,67	0,02	194	194	0,74
421 011 10	**421 011 11**	**421 013 05**	19,0 : 1	1500	75	1,02	106	176	0,86
			*38/2	1000	50	0,72	110	176	0,84
				500	25	0,41	119	176	0,80
				10	0,5	0,01	164	176	0,73
421 011 12	**421 011 13**	**421 013 06**	25,5 : 1	1500	57	0,57	77	140	0,82
			*51/2	1000	38	0,41	80	140	0,80
				500	19	0,23	87	140	0,77
				10	0,38	0,01	134	140	0,72
421 011 14	**421 011 15**	**421 013 07**	29,0 : 1	1500	50	0,87	126	215	0,78
			*29/1	1000	33	0,70	148	215	0,70
				500	17	0,45	176	215	0,71
				10	0,33	0,01	215	215	0,60
421 011 16	**421 011 17**	**421 013 08**	38,0 : 1	1500	38	0,76	128	194	0,76
			*38/1	1000	25	0,51	134	194	0,73
				500	13	0,29	145	194	0,68
				10	0,25	0,01	194	194	0,58
421 011 18	**421 011 19**	**421 013 09**	51,0 : 1	1500	28	0,37	84	156	0,70
			*51/1	1000	19	0,27	88	156	0,68
				500	9,4	0,15	96	156	0,64
				10	0,19	0,01	154	156	0,58
421 011 20	**421 011 21**	**421 013 10**	62,0 : 1	1500	24	0,41	105	139	0,65
			*62/1	1000	16	0,30	109	139	0,62
				500	8,1	0,17	113	139	0,56
				10	0,16	0,004	113	139	0,47
421 011 24	**421 011 25**	**421 013 12**	72,0 : 1	1500	21	0,32	86	121	0,59
			*72/1	1000	14	0,22	86	121	0,56
				500	6,9	0,12	86	121	0,50
				10	0,14	0,004	86	121	0,41
421 011 26[1)]	**421 011 27**[1)]	**421 013 13**[1)]	72,0 : 1	100	1,38	0,04	86	121	0,46
			*72/1 optimized for manual operation[1)]	10	0,14	0,004	86	121	0,41
421 011 22	**421 011 23**	**421 013 11**	83,0 : 1	1500	18	0,20	61	114	0,57
			*83/1	1000	12	0,14	64	114	0,56
				500	6	0,08	69	114	0,52
				10	0,12	0,002	75	114	0,47

* Example: Worm gear number of teeth 29 / worm shaft 6 threads.

1) This implicity self-locking version is optimezed for hand operation (special worm surface and special oil).

Worm Gear Units ZM/I, Technical Data, Size 63

The input power $P_{1\ perm}$ and output torques $T_{2\ perm}$ listed in the selection tables are based on shock-free continuous operation, an operating time of 8 hours/day, 3 starts per hour, operating time (OT) = 100% and 20°C ambient temperature. The maximum output torques T_{2max} may frequently be reached in short-term load peaks but they must not be exceeded. With an operating time under 90%, the permissible gearbox output can usually be increased.

i_n, i_{ist} = nominal ratio, real ratio.
n_1, n_2 [min^{-1}] = input speed, output speed.
$P_{1\ perm}$ [kW] = permittable input power.
$T_{2\ perm}$ [Nm] = permittable output torque (permanent).
T_{2max} [Nm] = maximum output torque (peak).
η = operating efficiency.

Dimensions Table Page 690.

Version with foot mounting brackets or shafts on both sides on request.

Version A		Version HL							
Output Side 5 Product No.	Output Side 6 Product No.	Hollow Shaft Product No.	Ratio i =	n_1 min^{-1}	n_2 min^{-1}	$P_{1\ perm}$ kW	$T_{2\ perm}$ Nm	T_{2max} Nm	η
421 021 00	**421 021 01**	**421 023 00**	4,83 : 1	1500	300	5,87	174	288	0,96
			*29/6	1000	200	4,25	188	288	0,95
				500	100	2,57	223	288	0,94
				10	2	0,07	288	288	0,86
421 021 02	**421 021 03**	**421 023 01**	7,25 : 1	1500	200	4,44	194	328	0,95
			*29/4	1000	133	3,17	206	328	0,94
				500	67	1,93	244	328	0,91
				10	1,3	0,06	328	328	0,83
421 021 04	**421 021 05**	**421 023 02**	9,75 : 1	1500	150	3,35	195	301	0,94
			*39/4	1000	100	2,35	203	301	0,93
				500	50	1,29	216	301	0,90
				10	1	0,04	289	301	0,83
421 021 06	**421 021 07**	**421 023 03**	12,75 : 1	1500	113	1,81	135	243	0,92
			*51/4	1000	75	1,28	142	243	0,91
				500	38	0,71	152	243	0,88
				10	0,75	0,02	239	243	0,82
421 021 08	**421 021 09**	**421 023 04**	14,5 : 1	1500	100	2,24	186	387	0,89
			*29/2	1000	67	1,78	217	387	0,88
				500	33	1,14	268	387	0,84
				10	0,67	0,04	387	387	0,74
421 021 10	**421 021 11**	**421 023 05**	19,5 : 1	1500	75	2,00	220	355	0,88
			*39/2	1000	50	1,46	235	355	0,87
				500	25	0,82	252	355	0,83
				10	0,5	0,02	339	355	0,74
421 021 12	**421 021 13**	**421 023 06**	25,5 : 1	1500	57	1,25	174	314	0,86
			*51/2	1000	38	0,89	182	314	0,84
				500	19	0,50	197	314	0,80
				10	0,38	0,02	281	314	0,73
421 021 14	**421 021 15**	**421 023 07**	29,0 : 1	1500	50	1,22	183	429	0,81
			*29/1	1000	33	0,99	215	429	0,79
				500	17	0,67	274	429	0,73
				10	0,33	0,03	429	429	0,60
421 021 16	**421 021 17**	**421 023 08**	39,0 : 1	1500	38	1,11	217	393	0,79
			*39/1	1000	25	0,89	255	393	0,76
				500	13	0,58	305	393	0,71
				10	0,25	0,02	393	393	0,60
421 021 18	**421 021 19**	**421 023 09**	51,0 : 1	1500	28	0,78	191	346	0,75
			*51/1	1000	19	0,57	201	346	0,73
				500	9,4	0,33	218	346	0,68
				10	0,19	0,01	298	346	0,58
421 021 20	**421 021 21**	**421 023 10**	61,0 : 1	1500	24	0,78	211	281	0,70
			*61/1	1000	16	0,58	226	281	0,67
				500	8,1	0,32	226	281	0,60
				10	0,16	0,01	226	281	0,47
421 021 24	**421 021 25**	**421 023 12**	72,0 : 1	1500	21	0,60	176	235	0,64
			*72/1	1000	14	0,43	176	235	0,60
				500	6,9	0,24	176	235	0,53
				10	0,14	0,01	176	235	0,39
421 021 26[1)]	**421 021 27**[1)]	**421 023 13**[1)]	72,0 : 1	100	1,38	0,09	176	235	0,41
			*72/1 optimized for manual operation[1)]	10	0,14	0,01	176	235	0,39
421 021 22	**421 021 23**	**421 023 11**	82,0 : 1	1500	18	0,45	152	247	0,64
			*82/1	1000	12	0,32	152	247	0,61
				500	6	0,17	152	247	0,56
				10	0,12	0,004	152	247	0,46

* Example: Worm gear number of teeth 29 / worm shaft 6 threads.

[1)] This implicity self-locking version is optimezed for hand operation (special worm surface and special oil).

Worm Gear Units ZM/I, Technical Data, Size 80

The input power $P_{1permiss.}$ and output torques $T_{2permiss.}$ listed in the selection tables are based on shock-free continuous operation, an operating time of 8 hours/day, 3 starts per hour, operating time (OT) = 100% and 20°C ambient temperature. The maximum output torques T_{2max} may frequently be reached in short-term load peaks but they must not be exceeded. With an operating time under 90%, the permissible gearbox output can usually be increased.

i_n, i_{ist} = nominal ratio, real ratio.
n_1, n_2 [min^{-1}] = input speed, output speed.
$P_{1\ perm}$ [kW] = permittable input power.
$T_{2\ perm}$ [Nm] = permittable output torque (permanent).
T_{2max} [Nm] = maximum output torque (peak).
η = operating efficiency.

Dimensions Table Page 690.

Version with foot mounting brackets or shafts on both sides on request.

Version A		Version HL							
Output Side 5 Product No.	Output Side 6 Product No.	Hollow Shaft Product No.	Ratio i =	n_1 min^{-1}	n_2 min^{-1}	$P_{1\ perm}$ kW	$T_{2\ perm}$ Nm	T_{2max} Nm	η
421 031 00	**421 031 01**	**421 033 00**	5,0 : 1	1500	300	9,82	303	597	0,97
			*30/6	1000	200	7,16	329	597	0,96
				500	100	4,40	399	597	0,95
				10	2	0,14	597	597	0,87
421 031 02	**421 031 03**	**421 033 01**	7,5 : 1	1500	200	7,22	330	681	0,96
			*30/4	1000	133	5,35	364	681	0,95
				500	67	3,31	441	681	0,93
				10	1,3	0,11	681	681	0,84
421 031 04	**421 031 05**	**421 033 02**	10,0 : 1	1500	150	6,17	373	613	0,94
			*40/4	1000	100	4,35	391	613	0,94
				500	50	2,70	473	613	0,92
				10	1	0,08	613	613	0,83
421 031 06	**421 031 07**	**421 033 03**	13,25 : 1	1500	113	2,40	188	335	0,93
			*53/4	1000	75	1,69	197	335	0,92
				500	38	0,93	212	335	0,89
				10	0,75	0,03	335	335	0,83
421 031 08	**421 031 09**	**421 033 04**	15,0 : 1	1500	100	3,59	313	810	0,91
			*30/2	1000	67	2,86	370	810	0,90
				500	33	1,83	455	810	0,87
				10	0,67	0,08	810	810	0,75
421 031 10	**421 031 11**	**421 033 05**	20,0 : 1	1500	75	3,11	356	725	0,90
			*40/2	1000	50	2,46	416	725	0,89
				500	25	1,59	518	725	0,85
				10	0,5	0,05	725	725	0,74
421 031 12	**421 031 13**	**421 033 06**	26,5 : 1	1500	57	1,67	245	444	0,87
			*53/2	1000	38	1,18	257	444	0,86
				500	19	0,67	277	444	0,82
				10	0,38	0,03	444	444	0,73
421 031 14	**421 031 15**	**421 033 07**	30,0 : 1	1500	50	1,92	308	878	0,84
			*30/1	1000	33	1,55	364	878	0,82
				500	17	1,03	454	878	0,77
				10	0,33	0,04	878	878	0,60
421 031 16	**421 031 17**	**421 033 08**	40,0 : 1	1500	38	1,69	350	802	0,81
			*40/1	1000	25	1,36	411	802	0,79
				500	13	0,74	519	802	0,74
				10	0,25	0,04	802	802	0,60
421 031 18	**421 031 19**	**421 033 09**	53,0 : 1	1500	28	1,04	271	501	0,78
			*53/1	1000	19	0,75	285	501	0,75
				500	9,4	0,43	309	501	0,70
				10	0,19	0,02	501	501	0,59
421 031 20	**421 031 21**	**421 033 10**	62,0 : 1	1500	24	1,16	333	570	0,73
			*62/1	1000	16	0,94	393	570	0,70
				500	8,1	0,60	448	570	0,63
				10	0,16	0,02	448	570	0,47
421 031 24	**421 031 25**	**421 033 12**	72,0 : 1	1500	21	1,00	314	498	0,69
			*72/1	1000	14	0,82	370	498	0,66
				500	6,9	0,46	370	498	0,58
				10	0,14	0,02	370	498	0,41
421 031 26[1)]	**421 031 27**[1)]	**421 033 13**[1)]	72,0 : 1	100	1,38	0,18	370	498	0,50
			*72/1 optimized for manual operation[1)]	10	0,14	0,02	370	498	0,41
421 031 22	**421 031 23**	**421 033 11**	82,0 : 1	1500	18	0,84	304	510	0,69
			*82/1	1000	12	0,59	304	510	0,66
				500	6	0,33	304	510	0,60
				10	0,12	0,01	304	510	0,47

* Example: Worm gear number of teeth 30 / worm shaft 6 threads.

[1)] This implicity self-locking version is optimezed for hand operation (special worm surface and special oil).

Dimensions Table Worm Gear Units ZM/I

The sides 1 to 6 are machined and can be used as mounting surfaces. The foot mounting brackets F can be connected to the sides 1 and 2.

(1) The sides 1, 2, 3, 5 and 6 are ex-works always supplied with threaded bores.

If side 4 is to be used as mounting surface, the respective surface is supplied with threaded bores. The worm shaft end can be fitted on side 3 or 4 as desired. Shaft end with thread alignment according to DIN 332 sheet 2 see page 820, feather keys and grooves according to DIN 6885/1. Position of the venting filter according to the table on page 685. The gearbox can function in any mounting position.

Version with foot mounting bracket or double-sided output shaft on request.

Version A

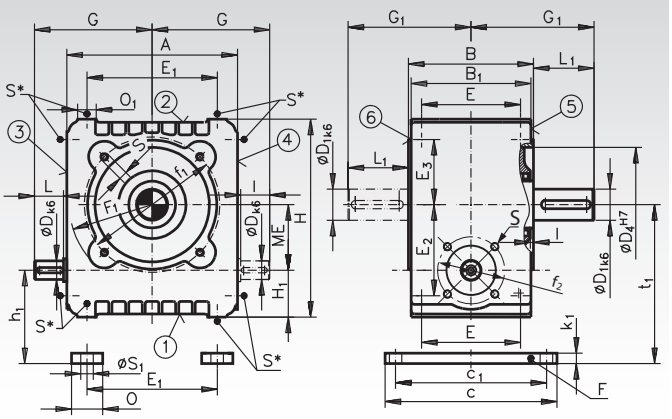

Version HL

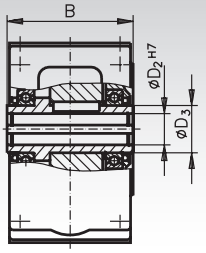

Gearbox Dimensions

Size	ME	A	B	B_1	c	c_1	D_4	D x L	D_1 x L_1	D_2	D_3	E	E_1	E_2*	E_3*	F_1
		mm	mm	mm	mm	mm	mm	mm	mm	mm	mm	mm	mm	mm	mm	mm
40	40	104	90	85	125	110	70	14 x 24	22 x 36	22	35	70	70	55	35	53
50	50	140	105	100	150	130	90	16 x 28	25 x 42	25	40	80	100	70	50	65
63	63	164	120	115	165	145	110	18 x 28	30 x 58	30	45	95	125	87,5	62,5	80
80	80	204	140	135	190	165	140	24 x 36	38 x 58	38	55	115	155	107,5	77,5	100

Size	f_1	f_2	G	G_1	H_1	h_1	H	I	k_1	O	O_1	S*	S_1	t_1	Weight
	mm	mm	mm	mm	mm	mm	mm	mm	mm	mm	mm	mm	mm	mm	g
40	85	50	79	81	32	40	124	3	8	25	14	M6 x 12	10	80	7
50	110	64	100	94,5	40	50	160	3	10	30	18	M8 x 14	12	100	12
63	130	70	113	118	45	55	190	3	10	30	18	M8 x 14	12	118	18
80	165	81	141	128	55	67	237	3	12	35	22	M10 x 17	15	147	28

* Threaded bores on side 4 at extra charge. Dimensions may be subject to alteration.

Permissible Radial Loads F_R [N] for Normal Output Shaft and Bearing System

The permiss. radial loads indicated in the table are calculated for the centre of the output shaft end, also calculating in the output speed and the nominal output torque. The values were calculated for the adverse rotational direction. The permiss. radial loads only apply to unilateral load. If in your application high radial loads occur in combination with axial loads, we ask you to contact us.

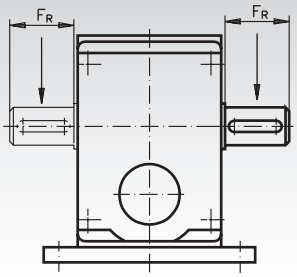

Size	Output Torques Nm	Permiss. Radial Load [N] at Output Speeds n_2 [min^{-1}] 6	8	10	12	16	20	25	32	40	50	63	80	100	125	160	200	250	320
40	0 - 80	2500	2375	2250	2125	2000	1875	1775	1675	1575	1400	1325	1250	1175	1125	1050	925	875	800
50	0 - 125	3500	3325	3150	2970	2800	2620	2480	2340	2200	1960	1850	1750	1640	1570	1470	1290	1220	1120
	125 - 160	3200	3040	2880	2720	2560	2400	2270	2140	2010	1790	1700	1600	1500	1440	1340	1180	1120	1020
63	0 - 200	5000	4750	4500	4250	4000	3750	3550	3350	3150	2800	2650	2500	2350	2250	2100	1850	1750	1600
	200 - 250	4600	4360	4140	3910	3680	3450	3260	3080	2900	2570	2440	2300	2160	2070	1930	1700	1610	1470
	250 - 320	3500	3325	3150	2975	2800	2625	2485	2345	2205	1960	1855	1750	1645	1575	1470	1295	1225	1120
80	0 - 500	7500	7120	6740	6370	6000	5620	5320	5000	4700	4200	4000	3750	3500	3370	3140	2770	2620	2400

Please use our website

at www.maedler.de

Put in a search word or part number and go directly to the product page

Find the PDF-catalogue page and further information

Manual instructions, certificates, safety data sheets in the section Downloads

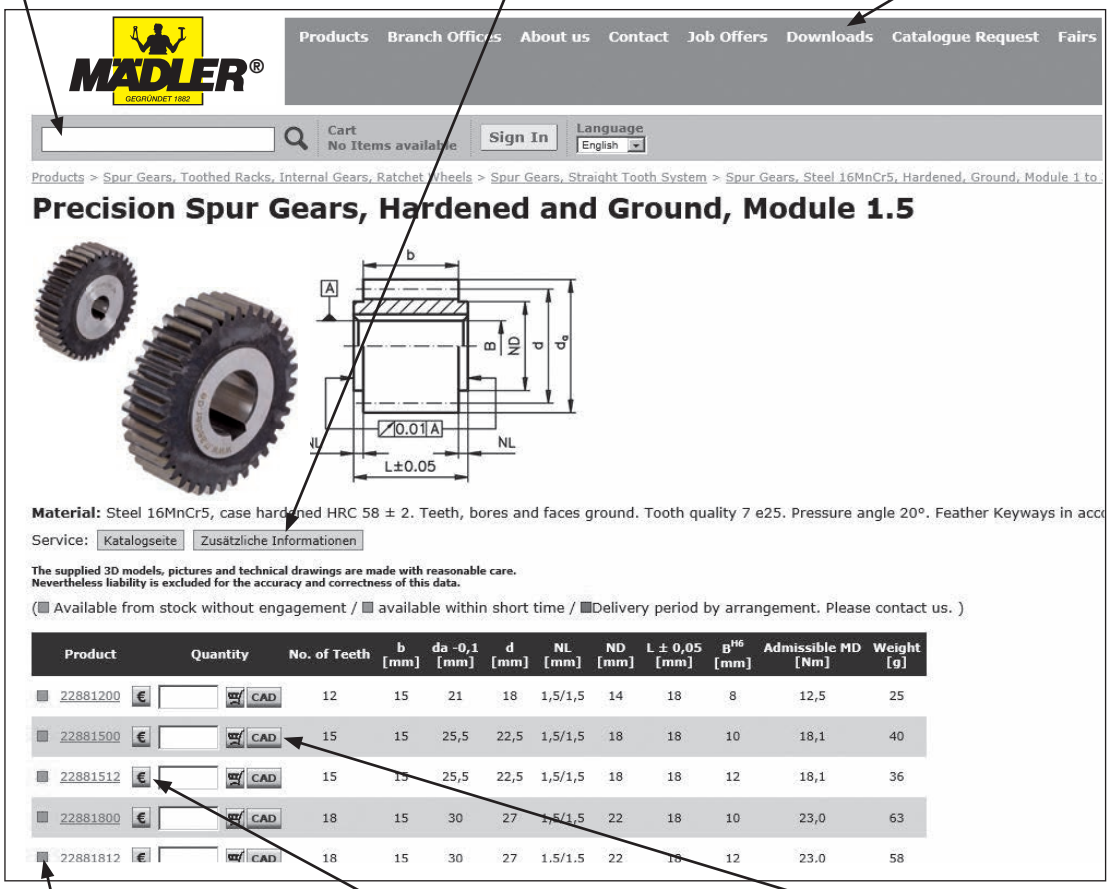

The availability of all products is shown by coloured sign

Drag the mouse onto the currency-symbol to see the prices*

Download CAD-drawings in 3D

A lot of possibilities and information:

- **Download of PDF catalogues in different languages.**
- **See all our branches and distributors.**
- **Make easily your order online and follow your parcel.**
- ***MÄDLER*®-Tools: Use our selection- and calculation tools.**
- **News: Useful information about exhibitions and others.**
- **Newsletter: Monthly information per e-mail.**

* Prices and terms of delivery depend on the country.

Standard Three-Phase Motors SM/I, with Cage Rotor, Surface Cooled, for 230/400 V, 50 Hz

These motors comply with the recommendations IEC 72. Electrical characteristics according to VDE 0530 and recommendation IEC 34-1. Housing aluminium die-cast. The motors are self-ventilated and are fitted with radial plastic fans, which cool independently of the sense of rotation. Fan cover made from steel sheet. Protection class IP 55. Isolation class F.

The rated output stated below refers to continuous duty, an operating frequency of 50 Hz, a maximum ambient temperature of 40°C and an altitude 1,000 m above sea level.

From 0.75 kW in efficiency class IE3 (only 2 - 6 pole motors).

Special versions on request: With non-standard voltage and frequency, dual speed, with electromagnetical DC spring-tension disc brake; AC capacitor motor 230 Volt.

Ordering details: e.g.: Type, Model, Product No.

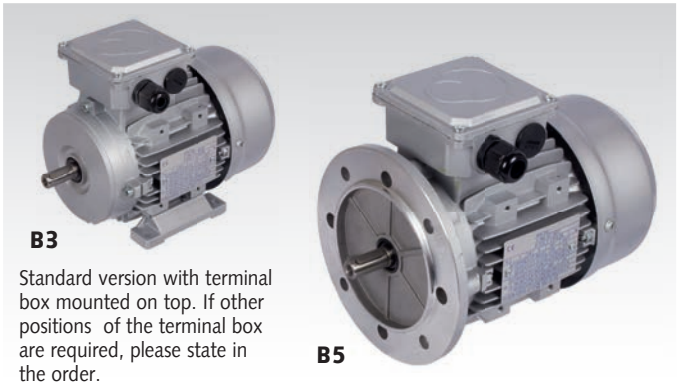

B3

Standard version with terminal box mounted on top. If other positions of the terminal box are required, please state in the order.

B5

2 Poles approx. 3000 min^{-1}

Model B3 Product No.	Model B5 Product No.	Size	Nominal Power kW	Nominal Speed min^{-1}	J kgm^2	η at speed 4/4n 3/4n 2/4n %	Power Factor cos φ	Current at 400V A	Nominal Torque T_n [Nm]	Starting Torque T_a/T_n	Starting Current I_d/I_n	max. Torque T_{max}/T_n	Weight B3 kg
430 004 00	**430 024 00**	63	0,25	2710	0,00024	65 / - / -	0,78	0,71	0,88	2,2	6,0	2,4	4,4
430 005 00	**430 025 00**	71	0,37	2730	0,00035	65 / - / -	0,79	0,97	1,3	2,2	6,0	2,4	5,6
430 006 00	**430 026 00**	71	0,55	2760	0,00052	65 / - / -	0,79	1,42	1,9	2,2	6,0	2,4	6,1
430 007 00	**430 027 00**	80	0,75	2890	0,00097	81 / 80 / 77	0,81	1,66	2,51	3,1	7,4	3,2	8,4
430 008 00	**430 028 00**	80	1,1	2890	0,00128	83 / 83 / 80	0,83	2,31	3,69	3,4	8,7	3,4	10,2
430 009 00	**430 029 00**	90 S	1,5	2900	0,00219	84 / 84 / 81	0,82	3,14	5,02	3,5	8,3	3,7	14,4
430 010 00	**430 030 00**	90 L	2,2	2910	0,00264	86 / 86 / 85	0,82	4,51	7,38	3,1	8,1	3,5	16,2
430 011 00	**430 031 00**	100 L	3	2910	0,00484	87 / 88 / 86	0,89	5,59	10,05	3,2	9,4	3,6	18,5
430 012 00	**430 032 00**	112 M-T	4	2920	0,00751	88 / 88 / 87	0,91	7,20	13,13	3,4	10,5	3,9	30,2
430 013 00	**430 033 00**	132 S	5,5	2930	0,01521	89 / 89 / 88	0,89	10,00	18,08	3,2	10,0	4,0	44,1

4 Poles approx. 1500 min^{-1}

Model B3 Product No.	Model B5 Product No.	Size	Nominal Power kW	Nominal Speed min^{-1}	J kgm^2	η at speed 4/4n 3/4n 2/4n %	Power Factor cos φ	Current at 400V A	Nominal Torque T_n [Nm]	Starting Torque T_a/T_n	Starting Current I_d/I_n	max. Torque T_{max}/T_n	Weight B3 kg
430 043 00	**430 063 00**	63	0,18	1350	0,0003	59 / - / -	0,65	0,68	1,3	2,2	6,0	2,4	4,3
430 044 00	**430 064 00**	71	0,25	1350	0,0007	60 / - / -	0,72	0,84	1,8	2,2	6,0	2,4	5,4
430 045 00	**430 065 00**	71	0,37	1370	0,0010	65 / - / -	0,74	1,11	2,6	2,2	6,0	2,4	6,2
430 046 00	**430 066 00**	80	0,55	1370	0,0020	67 / - / -	0,75	1,58	3,7	2,2	6,0	2,4	9,0
430 047 00	**430 067 00**	80	0,75	1440	0,0023	83 / 83 / 80	0,69	1,90	5,0	3,1	6,3	3,1	11,3
430 048 00	**430 068 00**	90 S	1,1	1440	0,0038	84 / 84 / 83	0,73	2,59	7,4	4,0	7,1	3,4	15,0
430 049 00	**430 069 00**	90 L	1,5	1430	0,0047	85 / 86 / 84	0,74	3,43	10,1	3,4	7,1	3,3	18,0
430 050 00	**430 070 00**	100 L	2,2	1450	0,0088	87 / 87 / 86	0,80	4,58	14,7	2,8	7,9	3,3	23,3
430 051 00	**430 071 00**	100 L	3	1450	0,0111	88 / 88 / 87	0,78	6,33	20,0	3,3	8,1	3,4	28,0
430 052 00	**430 072 00**	112 M-T	4	1450	0,0153	89 / 89 / 88	0,82	7,95	26,6	3,1	8,6	3,7	32,2
430 053 00	**430 073 00**	132 S	5,5	1460	0,0345	90 / 90 / 89	0,84	10,50	36,7	2,3	9,0	3,5	48,0

6 Poles approx. 1000 min^{-1}

Model B3 Product No.	Model B5 Product No.	Size	Nominal Power kW	Nominal Speed min^{-1}	J kgm^2	η at speed 4/4n 3/4n 2/4n %	Power Factor cos φ	Current at 400V A	Nominal Torque T_n [Nm]	Starting Torque T_a/T_n	Starting Current I_d/I_n	max. Torque T_{max}/T_n	Weight B3 kg
430 104 00	**430 124 00**	71	0,25	900	0,0013	59 / - / -	0,70	0,87	2,65	2,1	4,0	2,2	6,5
430 105 00	**430 125 00**	80	0,37	900	0,0016	62 / - / -	0,70	1,23	3,93	1,9	4,0	1,9	8,2
430 106 00	**430 126 00**	80	0,55	900	0,0026	67 / - / -	0,72	1,65	5,84	2,0	4,0	2,3	9,9
430 107 00	**430 127 00**	90 S	0,75	950	0,004	79 / 80 / 78	0,67	2,05	7,66	2,3	4,7	2,6	14,0
430 108 00	**430 128 00**	90 L	1,1	950	0,005	81 / 81 / 78	0,67	2,93	11,2	2,7	5,2	2,9	16,2
430 109 00	**430 129 00**	100 L	1,5	955	0,009	83 / 83 / 82	0,70	3,75	15,2	2,4	5,5	2,9	22,0
430 110 00	**430 130 00**	112 M-T	2,2	965	0,018	84 / 85 / 83	0,68	5,54	22,4	2,0	5,5	2,5	26,0
430 111 00	**430 131 00**	132 S	3	965	0,034	86 / 86 / 85	0,74	6,84	30,5	2,0	6,0	2,7	39,0
430 112 00	**430 132 00**	132 M	4	970	0,044	87 / 87 / 86	0,74	8,99	40,4	2,3	6,8	3,0	47,2
430 113 00	**430 133 00**	132 M	5,5	975	0,054	88 / 88 / 87	0,71	12,70	55,6	2,9	7,4	3,5	55,4

8 Poles approx. 750 min^{-1}

Model B3 Product No.	Model B5 Product No.	Size	Nominal Power kW	Nominal Speed min^{-1}	J kgm^2	η at speed 4/4n %	Power Factor cos φ	Current at 400V A	Nominal Torque T_n [Nm]	Starting Torque T_a/T_n	Starting Current I_d/I_n	max. Torque T_{max}/T_n	Weight B3 kg
430 144 00	**430 164 00**	80	0,25	680	0,0025	56	0,61	1,06	3,5	1,6	2,7	2,0	10,9
430 145 00	**430 165 00**	90 S	0,37	680	0,0024	63	0,63	1,35	5,2	1,6	2,8	1,8	14,8
430 146 00	**430 166 00**	90 L	0,55	680	0,0032	66	0,65	1,85	7,7	1,6	3,0	1,8	17,2
430 147 00	**430 167 00**	100 L	0,75	710	0,0052	66	0,67	2,45	10,1	1,7	3,5	2,1	17,5
430 148 00	**430 168 00**	100 L	1,1	710	0,0067	72	0,69	3,20	14,8	1,7	3,5	2,1	19,7
430 149 00	**430 169 00**	112 M-T	1,5	710	0,0122	74	0,68	4,30	20,2	1,8	4,2	2,1	25,6
430 150 00	**430 170 00**	132 S	2,2	720	0,0194	75	0,71	5,96	29,2	2,0	5,5	2,0	35,5
430 151 00	**430 171 00**	132 M	3	720	0,0343	77	0,73	7,70	39,8	2,0	5,5	2,0	45,0

Other power rates and model B14 available at short time.

Motor-tensioning rails see page 695.

MÄDLER® GEGRÜNDET 1882

Dimensions Table Standard Three-Phase Motors SM/I, Model B 3

Standard version with terminal box mounted on top. If other positions of the terminal box are required, please state in the order.

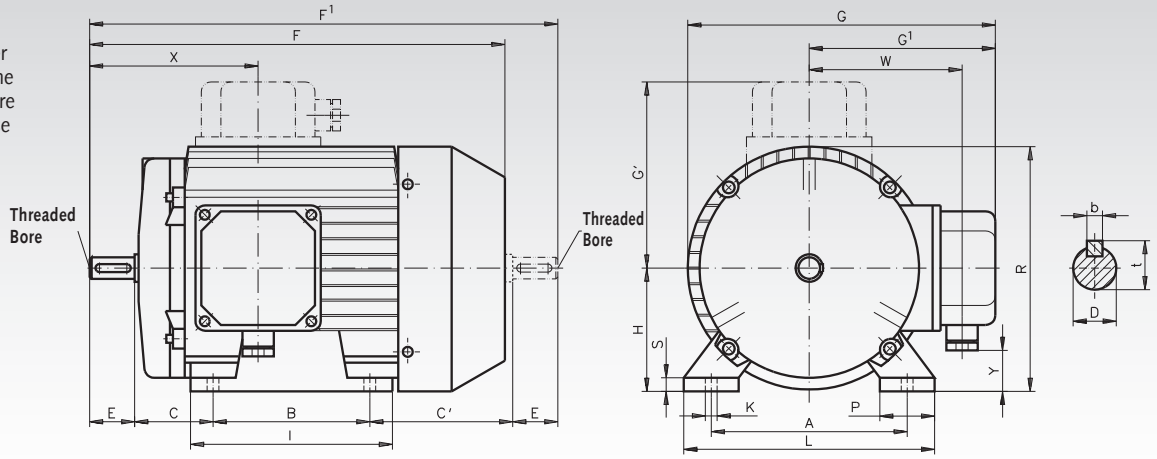

Position of terminal box: standard on top (against drawing!)

Size	A mm	B mm	C mm	D mm	E mm	F mm	G mm	H +0 -0.5 mm	K mm	I mm	L mm	P mm	R mm	S mm	C1 mm	F1 mm	G1 mm	X mm	Y mm	W mm	b mm	t mm	PG-Screw Connect.	Threaded Bore
63	100	80	40	11j6	23	212	158	63	6	103	128	28	125	7	73	239	113	86	18	68	4	12,5	Pg11	M4x0,7
71	112	90	45	14j6	30	238	185	71	7	101	137	24	144	10	85.5	280	125	111	20	88	5	16	Pg11	M5x0,8
80	125	100	50	19j6	40	274	210	80	9	122	155	30	164	10	93.5	323	133	113	30	96	6	21,5	Pg11	M6x1
90S	140	100	56	24j6	50	297	230	90	10	125	175	34	180	12	118	374	148	134	30	115	8	27	Pg13.5	M8x1,25
90L	140	125	56	24j6	50	322	230	90	10	150	175	34	180	12	118	399	148	134	30	115	8	27	Pg13.5	M8x1,25
100L	160	140	63	28j6	60	361	253	100	12	173	198	37	205	14	107	430	156	160	35	123	8	31	Pg13.5	M10x1,5
112M-T	190	140	70	28j6	60	361	265	112	12	178	224	38	217	15	100	430	173	160	47	123	8	31	Pg13.5	M10x1,5
132S	216	140	89	38k6	80	470	328	132	13	225	258	50	264	19	167	556	189	198	50	162	10	41	Pg21	M12x1,75
132M	216	178	89	38k6	80	496	328	132	13	225	258	50	264	19	173	600	189	198	50	162	10	41	Pg21	M12x1,75

Dimensions Table Standard Three-Phase Motors SM/I, Model B 5

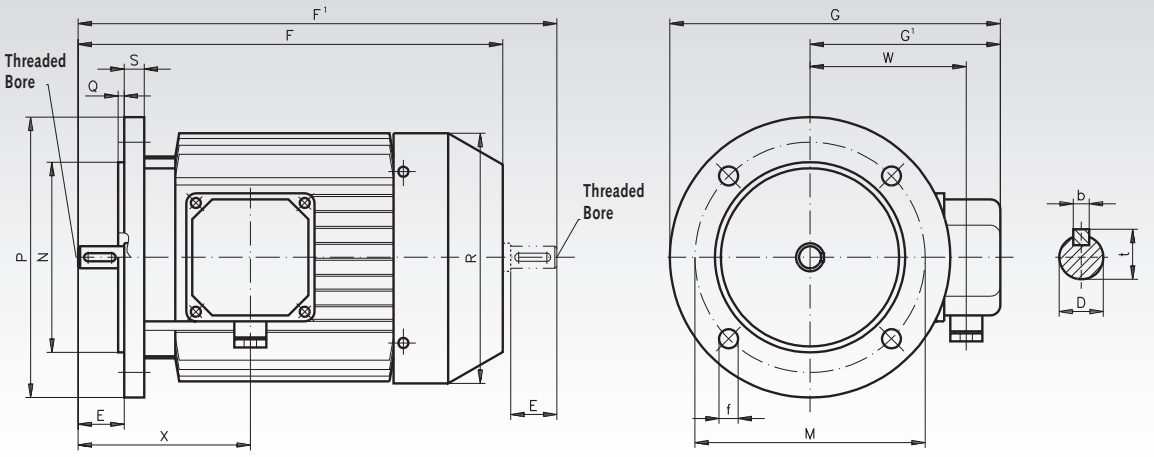

Size	D mm	E mm	F mm	f mm	G mm	M mm	N mm	P mm	Q mm	R mm	S mm	Flange-bores*	F1 mm	G1 mm	X mm	W mm	b mm	t mm	PG-Screw Connect.	Threaded Bore
63	11j6	23	212	9,5	165	115	95j6	140	3	125	10	4	239	113	86	68	4	12,5	Pg11	M4x0,7
71	14j6	30	238	9,5	195	130	110j6	160	3,5	148	10	4	280,5	125	111	88	5	16	Pg11	M5x0,8
80	19j6	40	274	11,5	226	165	130j6	200	3,5	170	12	4	323,4	133	113	96	6	21,5	Pg11	M6x1
90S	24j6	50	297	11,5	242	165	130j6	200	3,5	185	12	4	374	148	134	115	8	27	Pg13.5	M8x1,25
90L	24j6	50	322	11,5	242	165	130j6	200	3,5	185	12	4	399	148	134	115	8	27	Pg13.5	M8x1,25
100L	28j6	60	361	14	280	215	180j6	250	4	210	14	4	430	173	160	123	8	31	Pg13.5	M10x1,5
132S	38k6	80	470	14	350	265	230j6	300	4	260	14	4	556	189	198	162	10	41	Pg21	M12x1,75
132M	38k6	80	496	14	350	265	230j6	300	4	260	14	4	600	189	198	162	10	41	Pg21	M12x1,75

* Number of Flange boreholes.

Operating and maintenance instructions

on the internet at www.maedler.de

in the Section Downloads



On our website you can find operating and maintenance instructions in various languages for all our technically-sophisticated products. We are continuously extending this list of instructions.

Instructions available:	Language		
Bevel Gearboxes DZA, DZR	German	English	French
Bevel Gearboxes KES	German	English	
Bevel Gearboxes KU/I, KUM	German	English	French
Chain Tensioners SPANNBOX®, SPANNBOY®	Deutsch	English	
Continuously Variable Geared Motors MUN/I	German	English	
Couplings DXA	German	English	
Couplings RN, RNG, RNH, RNI, RNK, RNT	German	English	
Couplings BOS II / BOZ / BW	German	English	French
Electronic Drip Oilers ELO	German	English	
Frequency Converters FU6	German		
Frequency Converters RoFre 897	German		
Helical Gear Boxes BT/I	German	English	
Helical Geared Motors HR/I	German	English	
Helical Geared Motors NR/I	German	English	French
Linear Drives (Actuator Systems) GR/I	German	English	
Motor Controllers SFRG 05	German		
Motor Controllers SFRG 3	German		
Multi-Plate Friction Clutches PD	German	English	
Precision Worm Gear Sets	German		
Safety Clutches CM	German		
Safety Clutches SI	German	English	French
Shaft Mounted Gearboxes BOC/I	German	English	
Sliding Hubs FA	German		
Sliding Hubs FS	German	English	
Sliding Hubs ROBA®	German		
Sliding Hubs with Coupling RNR	German		
Slip Clutches KF	German	English	
Slip Clutches R2, R6	German		
Standard Three-Phase-Motors SM/I	German		
Taper Bushes	German	English	French
Telescopic Slides Accuride®	German	English	French
Worm Geared Motors HMD I / HMD II	German	English	French
Worm-Geared Motors MEG / MEK / MH / MZ	German	English	French
Worm-Geared Motors R / RH / RL / RM / RS	German	English	French
Worm-Geared Motors SRM / SRS	German	English	French
Worm-Geared Motors ZMD	German	English	French
Worm Gear Screw Jacks NP/I	German	English	French
Worm Gear Units G/II	German	English	French
Worm Gear Units H/I	German	English	
Worm Gear Units KES	German	English	
Worm Gear Units ZM	German	English	French

Motor-Tensioning Rail Sets, Made from Steel, SPS, with Movable Attachment Clamps

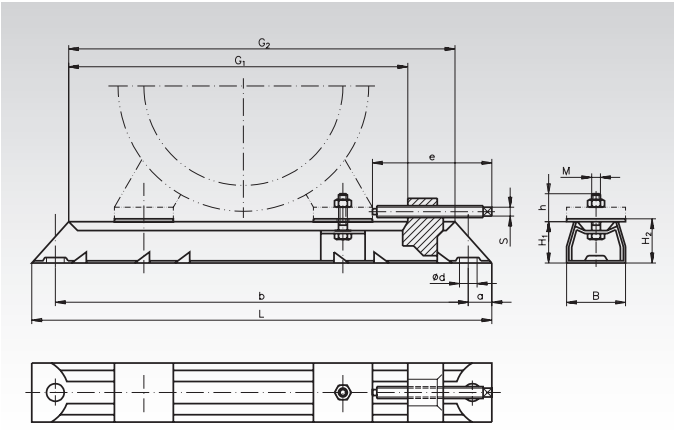



Ordering details: e.g.: Type, Overall Length, Product No.

Sold in pairs: 1 x Product No. = 1 pair

Product No. Pair	Overall Length L mm	Sliding Length G_1 mm	Motor Size	M x h mm	e x S mm	G_2 mm	a mm	b mm	Ød mm	B mm	H_1 mm	H_2 mm	Weight kg
430 180 00	312	240	63/71	M6 x 19	75 x 6	262	16	280	12	40	28	30	1,5
430 182 00	395	302	80/90	M8 x 28	97 x 8	325	20	355	12	50	40	43	3,3
430 184 00	495	405	100/112/132	M10 x 35	97 x 8	425	20	455	12	50	40	43	4,15
430 186 00	630	515	132	M10 x 37	119 x 9	542	25	580	14	60	50	54	8,1

Models Helical Geared Motors (The pictures only show the models, not the gearbox version)

B 3

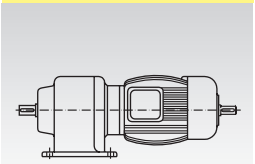

B 3 / B 5

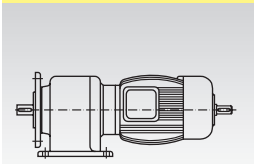

B 8 / B 5

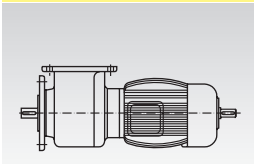

B 5

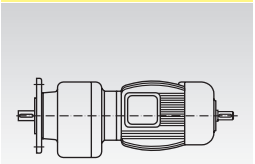

B 5a

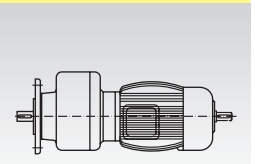

B 5 without Flange

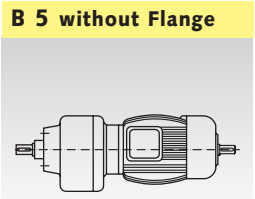

B 6

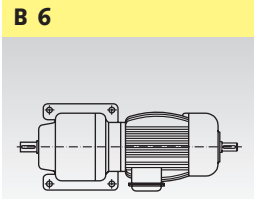

B 7

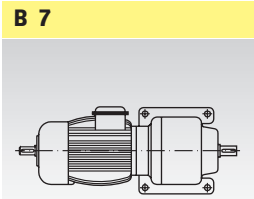

B 8

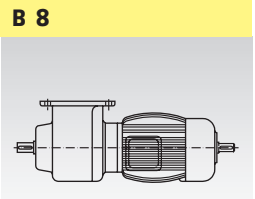

V 1

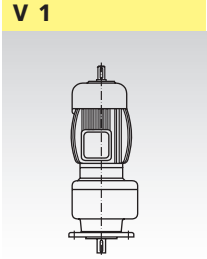

V 1 / V 5

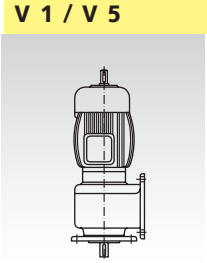

V 3

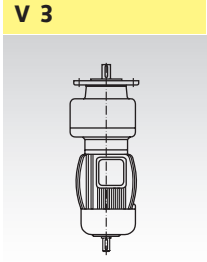

V 3 / V 6

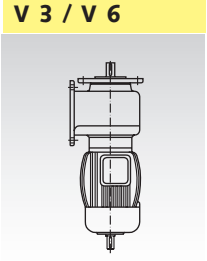

V 5

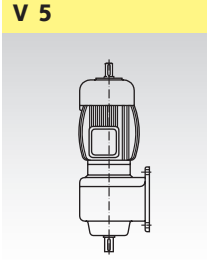

V 6

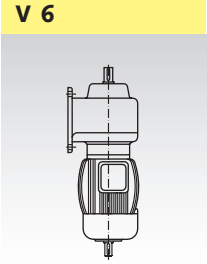

Motor controller SFRG 05 for DC-drives

- Intelligent motor controller with PWM output for speed setting or controlling of brushed DC motors.
- Supply voltage: 6 - 48 V DC.
- Motor current: 2,5 A continuous load (5 A peak current).
- Speed setting device or PI-controller operation.
- 4 logical inputs.
- CANopen.
- Setpoint setting possible via external pot (not included) or external voltage.
- Compact Version thanks to SMD technology.



Ordering Details: Product No. 430 460 05, Control Unit SFRG 05

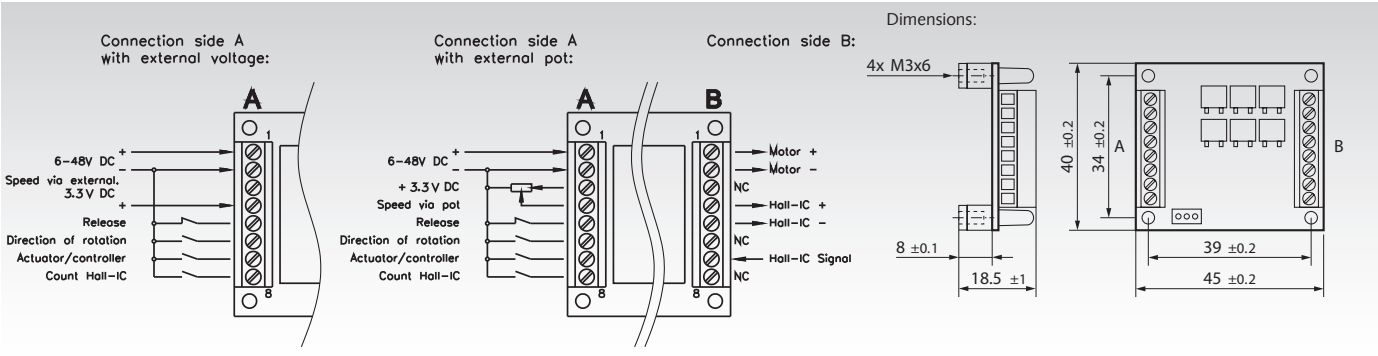

Product No. 430 460 05, Control Unit SFRG 05

Electrical data

Supply voltage:	6 V ... 48 V DC.
Motor nominal current:	2.5 A continuous load (peak current max. 5 A).
Speed selection:	0 V ... 3.3 V DC via 10 kOhm or external voltage.
Logical Inputs:	0 V ... 3.3 V, max. 50 mA.
Output switching frequency:	approx. 20 kHz.
No load current:	at 6 V ... 48 V DC, 70 mA...20 mA.

General data

Protection class:	3.
Protection rating:	open module IP00 as per IEC529 / EN 60529 / DIN VDE 0470 T1.
Isolation:	Low voltage operation.
Shock protection:	not needed.
Level of contamination:	2.

Permissible ambient operating temperature: -20 to +80°C.

Weight 25 g.

The circuit board is designed for installing in a closed control cabinet or similar housing made from metal with protection class IP 4x. Adequate ventilation is to be provided (free convection). The wiring has to be carried out as per EMC requirements.

Motor controller SFRG 3 for DC-drives

- Intelligent motor controller with PWM output for speed setting or controlling (option) of brushed DC motors.
- Supply voltages: 10 - 36 V DC or 10 - 24 V AC.
- Motor current up to 10 A continuous load.
- CANopen.
- 5 potential-free switching inputs or 5 voltage input signals 10 - 24 V (switchable per jumpers), 5 setting potentiometers.
- 2 counting inputs for hall sensors or encoder.
- 2 switching outputs, max. 1.5 A.
- 2 zero-voltage relays with changeover contacts.
- Output 12V DC max. 0,4 A, e.eg. to supply stop switches.
- Ramp function for start / stop.
- Motor current monitoring.
- pre-programmed functions: Left, right, stop, release.

Ordering Details: Product No. 430 460 30, Control Unit SFRG 3

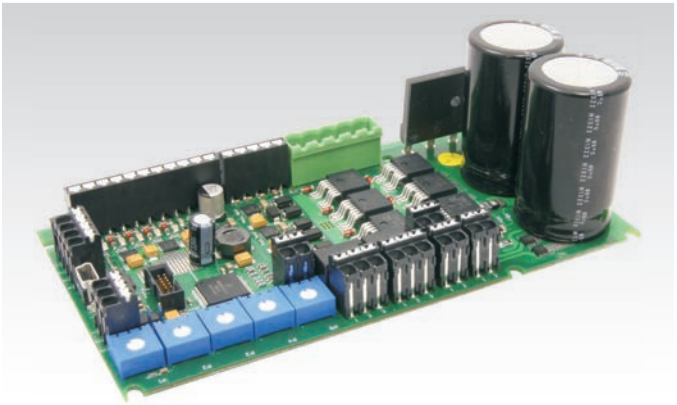

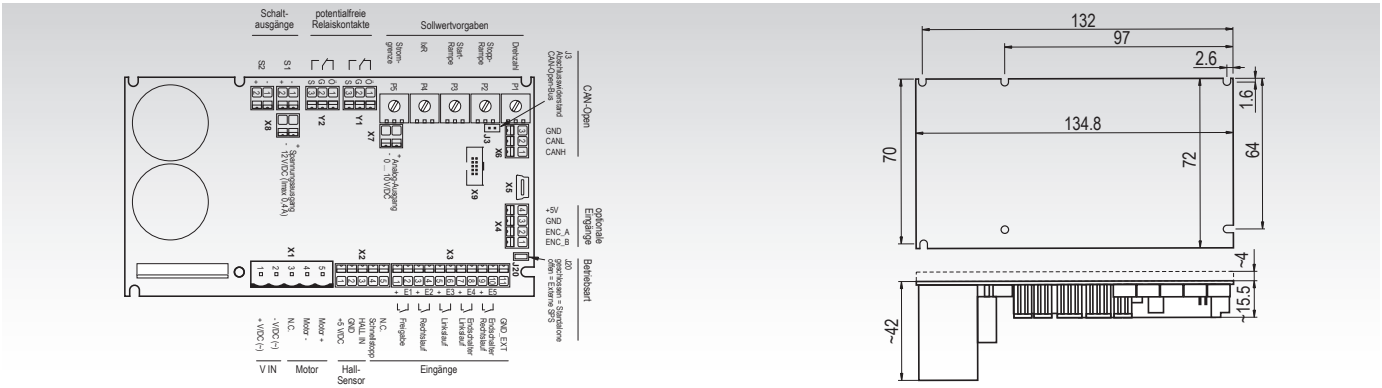

Product No. 430 460 30, Control Unit SFRG 3

Electrical data

Supply voltage:	10 V... 36 V DC/10 V... 24 V AC.
Motor nominal current:	10 A continuous load (peak current max. 25 A).
Motor current limit:	adjustable (stepless 0-100 % in 1% steps).
Speed setting range:	up to 50:1 (setting mode IxR / controlled operation.)
Digital inputs:	potential-free NO contact, approx. 2 mA or voltage input signals 10 - 24V DC, (switchable per jumpers).
Output switching frequency:	approx. 18 kHz.
Switching outputs:	max. 1.5 A.
Relay outputs:	max. 1A / 24 V DC.
Ramp function:	Rise time/fall time 0-100 % in 1% steps.
Interfaces:	CANopen.

General data

Connector technology:	plug-in spring-type terminals.
Approvals:	complies to the CE standard.
Protection class:	3.
Protection rating:	open module IP00 as per IEC529 / EN 60529 / DIN VDE 0470 T1.
Isolation:	Low voltage operation.
Shock protection:	not needed.
Level of contamination:	2. Weight 120 g.

Permissible ambient operating temperature: -10 to +60°C.

The circuit board is designed for installing in a closed control cabinet or similar housing made from metal with protection class IP 4x. Adequate ventilation is to be provided (free convection). The wiring has to be carried out as per EMC requirements.

Application specific matching of the software functions is possible, as well as terminal connection for external pots as an option.

Toroidal transformers for motor controller SFRG 3

- Safety and separation transformers as per EN 61558.
- Insulating class B (130°C).
- Maximum ambient temperature ta = +60°C.
- Primary and secondary connection via leads, length: 200 mm.
- Temperature switch (120°C) integrated in the primary windings.
- Pressureless central fastening with an M5 screw.
- Preparation for protection class II (as per VDE 0100).



Ordering Details: e.g.: Product No. 430 460 01, toroidal transformer 120 VA

Product No.	Power VA	Primary voltage V(AC)	Secondary voltage V(AC)	Nominal current A	Outside Ø mm	Length mm	Weight kg
430 460 01	120	1x230	1x24	5,00	98	48	1,25
430 460 02	192	1x230	1x24	8,00	115	48	1,85

Note for usage

These transformers are suitable for powering control units with a rectifier (e.g. SFRG 3). Use with the SFRG 05 control unit without rectifier is not possible.

Frequency Inverters NES1 (for 3-phase current Drives)

Frequency Inverters NES1 from brand manufacturer Hitachi, for controlling and speed setting of 3-phase motors. Main features of this series are easy parametrisation, a clearly arranged control panel and easy operation.

The automatic energy saving function adapts voltage and current to the motor´s load conditions for minimizing energy consumption. Delivery including mounted operating panel NES1-OP with LED display.



Ordering details: e.g.: Product No. 460 110 25, Frequency Inverter NES1-002 SBE

Prod. No.	Type	Number of Phases	Output Power kW	Output Voltage V	Output Current A	Input Voltage V	Input Current A	Input Fuse protection A	Dimensions H x B x T mm	Weight kg
460 110 25	NES1-002 SBE	1	0,25	3 x 0-240	1,4	1 x 230	2,7	10	128 x 68 x 76	1,6
460 110 37	NES1-004 SBE	1	0,37	3 x 0-240	2,6	1 x 230	5,5	10	128 x 68 x 91	1,8
460 110 75	NES1-007 SBE	1	0,75	3 x 0-240	4,0	1 x 230	9,2	20	128 x 108 x 96	2,0
460 111 50	NES1-015 SBE	1	1,5	3 x 0-240	7,1	1 x 230	15,0	30	128 x 108 x 107	2,7
460 112 20	NES1-022 SBE	1	2,2	3 x 0-240	10,0	1 x 230	20,0	30	128 x 108 x 125	2,9
460 130 75	NES1-007 HBE	3	0,75	3 x 0-400	2,5	3 x 400	2,7	10	128 x 108 x 96	2,0
460 131 50	NES1-015 HBE	3	1,5	3 x 0-400	4,1	3 x 400	4,4	15	128 x 108 x 111	2,2
460 132 20	NES1-022 HBE	3	2,2	3 x 0-400	5,5	3 x 400	6,4	15	128 x 108 x 125	2,4

Output
- Rotating-field frequency 0.1-400 Hz.
- Voltage boost 20%.
- Overload 150% I_n / 60s.
- Additional voltage 24 V DC, max. 100 mA, for external components like sensors or relais.

Input
- Voltage 1 x 230 V +/-10% 50/60 Hz.
  or 3 x 400 V +/-10% 50/60 Hz.

Control unit
- Cycle rate: 2-15 kHz, adjustable in steps.
- Stop functions: Ramp (0.01-3600), DC braking, coast.
- Protection systems: Surge current (200% I_n), overload, IGBT excessive temperature, overvoltage, undervoltage.
- Analog input: 0-10 V, 0-20 mA or 1 kOhm potentiometer.
- PWN output: 0-10 V (with current output frequency).
- 5 Digital inputs: Dry contacts or external 24 V DC industrial logic for start up, free programmable, reversion of rotation, fixed setpoint, reset, external control and some more.
- Digital output: Dry contact, programmable.
- Monitoring: Short circuit phase-phase or phase-earth.
- Relais output: free programmable.

Displays / Operating elements
- Control keys: Setting of system functions.
- Display: Operating mode and error message.

Environment
- Ambient temperature: -10...+50°C, depending on the type, mounting and frequency.
- Cooling: 1-phase inverters up to 0.75 kW without fan, other inverters with fan.
- Rel. humidity: 20...90% not condensing.

Mechanic
- Protection class IP20.

EMC
- optional upgrading to class B.

Diagnostic memory
- Retrieval of the last 6 operational faults.

Certificates
- RoHS, CE, UL[1)], cUL[1)], c-Tick[1)], GOST[1)].

[1)] With 4-pole motors and nominal current of motor ≤ nominal output current of the frequency inverter.

Frequency Inverters ROfre 897 (for 3-phase current Drives)

Frequency Inverters for controlling and speed setting of 3-phase motors.

- Protection class IP 54, i.e. can be used outside electrical cabinet.
- Completely wired with 2 m screened motor cable, 2 m mains cable with plug and potentiometer.
- Optional with integrated emergency-stop switch (right picture).
- Optional with selector switch for left-right.
- Optional with socket for external operation.

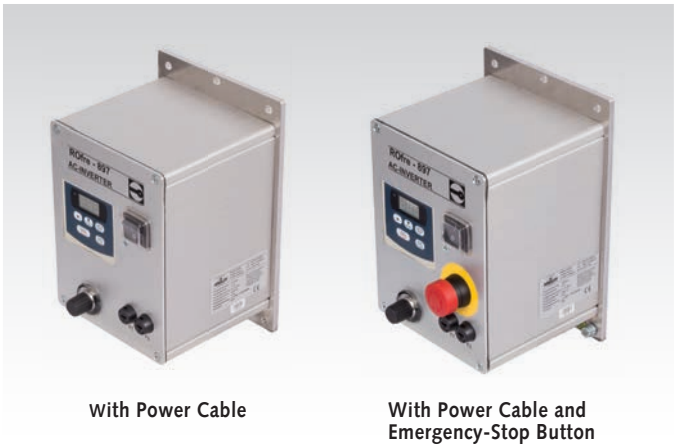

With Power Cable

With Power Cable and Emergency-Stop Button

Ordering details: e.g.: 460 410 25, Frequency Inverter ROfre 897, without Emergency Stop, Output Power 0.25 kW

Prod. No.	Emergency Stop	Output Power kW	Output Voltage V	Output Current A	Input Voltage V	Input Current A	Input Fuse Protection A	Dimensions H x B x T mm	Weight kg
460 410 25	No	0,25	3 x 0-240	1,4	1 x 230	3,0	16	200 x 130 x 120	2,2
460 410 37	No	0,37	3 x 0-240	2,3	1 x 230	5,2	16	200 x 130 x 120	2,2
460 410 75	No	0,75	3 x 0-240	4,2	1 x 230	9,4	16	200 x 140 x 140	2,6
460 510 25	Yes	0,25	3 x 0-240	1,4	1 x 230	3,0	16	200 x 130 x 120	2,2
460 510 37	Yes	0,37	3 x 0-240	2,3	1 x 230	5,2	16	200 x 130 x 120	2,2
460 510 75	Yes	0,75	3 x 0-240	4,2	1 x 230	9,4	16	200 x 140 x 140	2,6

Output
- Rotating-field frequency 0-200 Hz.
- Voltage boost 10%.
- Overload 150% I_n / 60s.

Input
- Voltage 1 x 230 V +/- 10% 50/60 Hz.

Control unit
- Cycle rate: 4-16 kHz, adjustable in steps.
- Stop functions: Ramp (0.1-999s), DC braking, coast, brake with chopper from 1.5kW.
- Protection systems: Surge current (200% I_n), overload, IGBT excessive temperature, overvoltage, undervoltage.
- Analog input*: 0-10 V, 0-20 mA or 10kOhm potentiometer.
- Analog output*: 0-10 V (with current output frequency).
- Digital input*: Dry contacts or external 24 V DC industrial logic for start up, reversion of rotation. 2 programmable inputs (inching mode, fixed setpoint, emergency stop, reset, external control).
- Digital output*: Dry contact, programmable.
- Monitoring: Short circuit phase-phase or phase-earth.

* Only for optional version with socket for external operation.

Displays / Operating elements
- Control keys: Setting of system functions.
- Display: Operating mode and error message.
- Setpoint potentiometer: For continuous adjustment of speed.

Environment
- Ambient temperature: -10...+40°C.
- Cooling: Convection.
- Rel. humidity: 0...95% not condensing.

Mechanic
- Protection class IP54.

EMC
- Filter class A included.

Diagnostic memory
- Retrieval of the last 3 operational faults.

Small Geared Motors Type CRO, 230V

Motor: For 230V, 50Hz synchronous motor for both rotational directions (see motor data overview).

Gearbox: Spur gears, straight toothed, made from plastic.

Ambient temperature: -5 to +70°C

Capacitor: Included in delivery.

Version A: one-stage, up to 50 Ncm.

Version B: two-stage, up to 200 Ncm.

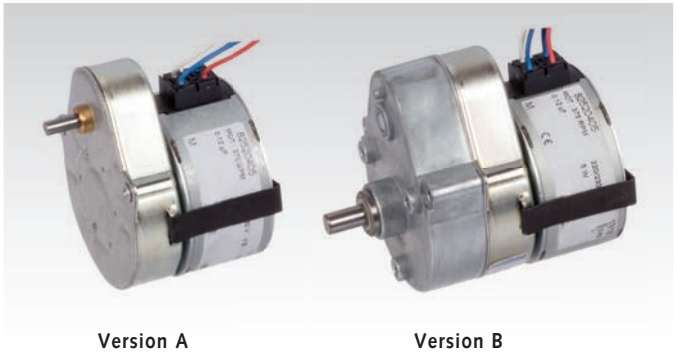

Version A Version B

Ordering details: e.g.: Type, Version, Output Speed, Product No.

Version A

Product No.	Standard Speed min^{-1}	Weight kg
430 200 00	60	0,25
430 200 01	30	0,25
430 200 02	15	0,25
430 200 03	10	0,25
430 200 06	5	0,25
430 200 08	3,12	0,25
430 200 09	2	0,25
430 200 10	1	0,25

Max. permiss. static load on bearing: axial = 10 N, radial = 80 N

Torque-Speed Table

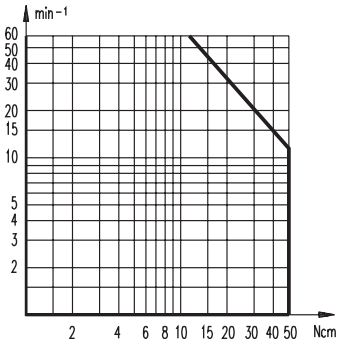

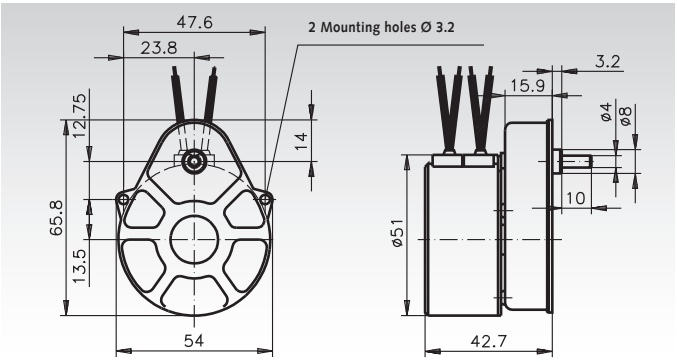

Version B

Product No.	Standard Speed min^{-1}	Weight kg
430 205 00	15	0,32
430 205 01	7,5	0,32
430 205 02	5	0,32
430 205 03	1	0,32
430 205 04	0,25	0,32

Max. permiss. static load on bearing: axial = 10 N, radial = 100 N

Torque-Speed Table

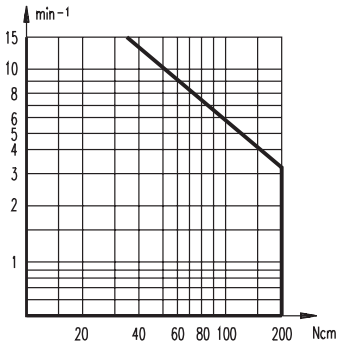

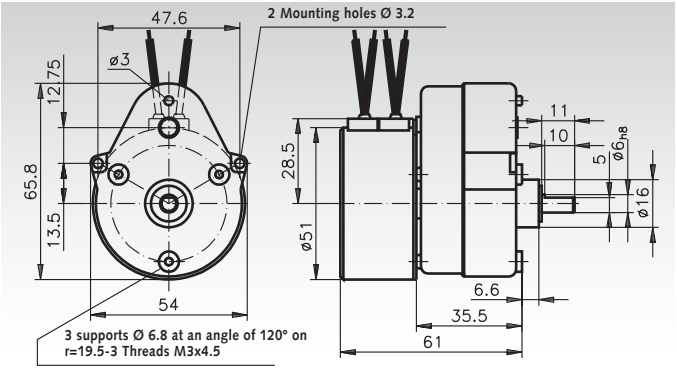

Motor data/Technical data

Moment of inertia for rotor	18.8 g·cm²
Absorbed power	3.5 W
Stall torque [1]	2.1 Ncm
Starting torque	1.9 Ncm
Max. coil temperature	120 °C
Ambient temperature	-5 +70 °C
Storage temperature	-40 +100 °C
Insulation resistance	>10³ MV
Electric strength (50 Hz)	> 2400 V
Weight of motor	210 g
Protection class	IP 40
Standard nominal voltage (-15 + 10%)	220/240 V
Absorbed power	16/17.3 mA
Frequency	50 Hz
Speed	375 min^{-1}
Capacitor values ±10%	0.12/600 µf/V
Connection	A
Colours of leads for standard motors	Blue: Terminal 1 White: Terminal 2

Wiring for parallel line connection A

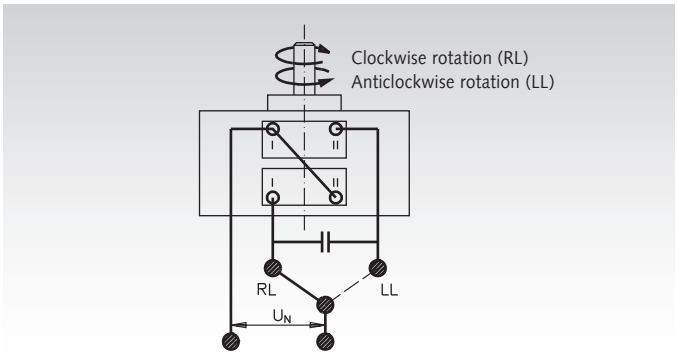

[1] Max. torque of the motor at continuous operation with nominal voltage and frequency.

Hinges at MÄDLER®:



on the internet at www.maedler.de

Small Geared Motors GE/I with Capacitor Motor, AC

General data: Light model range, extremely high ratios.
Housing: Aluminium die-cast, sealed against lubricant leaks and protected against dust, can be mounted in any position.
Gearing: Depending on the arrangement of the gear stages milled from high-grade platic or steel.
Bearing system: Motor: roller bearing. Gearbox: sintered bronze slide bearing.
Lubrication: Maintenance-free grease lubrication.
Motor: Capacitor motor for 230 V, 50 Hz, direction of rotation reversible. Pinion milled into motor shaft. The cable gland of the terminal box can be moved 4 x 90°.
Protection class IP 21. Insulation class E. Operation mode S1.

Please note: At continuous operation the motor heats up to 70°C.

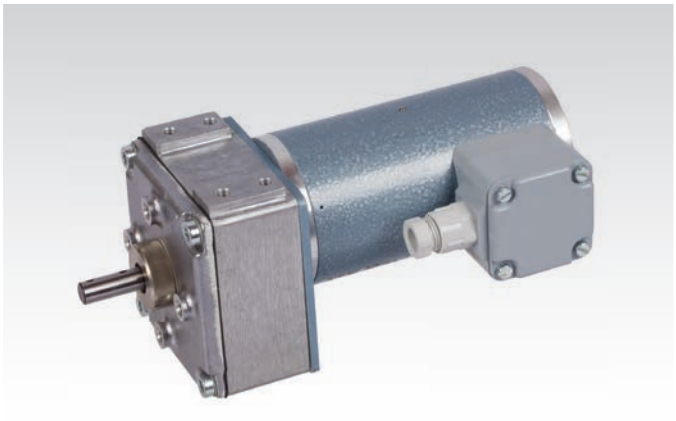

Ordering details: e.g.: Type, Product No. 430 401 00 Capacitor Motor
Product No. 430 301 01 Gearbox 15:1
Product No. 436 352 00 Operating Capacitor
(has to be ordered separately)

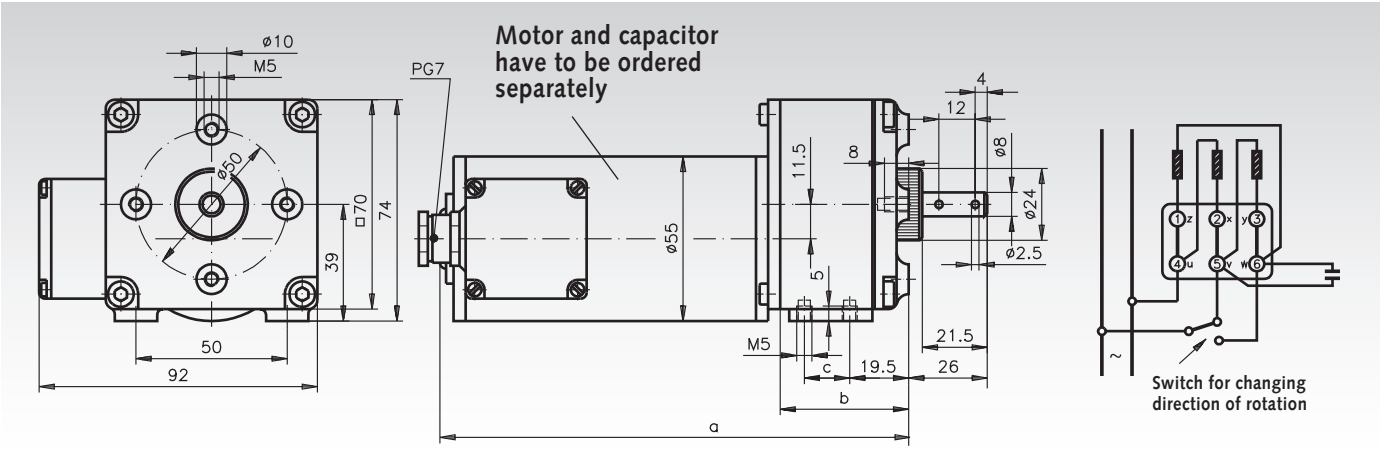

Capacitor motor: Product No. 430 401 00, Weight 1.2 kg ***Motor, gearbox and capacitor have to be ordered separately.***

Gearbox Product No.	Capacitor Motor Product No.	Output Speed in Relation to Motor Speed 2600 min^{-1}	Ratio i	Limit Load Gearbox max. continous Torque Ncm	max. starting Torque Ncm	Nominal Power Watt	Gearbox Efficiency-grad %	Dimensions a mm	b mm	c mm	Weight Gearbox kg
430 301 01	**430 401 00**	173,3	15 : 1	30	40	6,7	80	181	42,5	15	0,3
430 302 01	**430 401 00**	86,6	30 : 1	42	65	6,7	72	181	42,5	15	0,3
430 303 01	**430 401 00**	57,7	45 : 1	62	90	6,7	72	181	42,5	15	0,3
430 304 01	**430 401 00**	43,3	60 : 1	70	120	6,7	70	181	42,5	15	0,3
430 305 01	**430 401 00**	28,8	90 : 1	100	180	6,7	70	181	42,5	15	0,3
430 306 01	**430 401 00**	21,6	120 : 1	130	230	6,7	65	181	42,5	15	0,3
430 307 01	**430 401 00**	19,2	135 : 1	150	260	6,7	65	181	42,5	15	0,3
430 308 01	**430 401 00**	14,4	180 : 1	150	260	6,7	65	181	42,5	15	0,3
430 309 01	**430 401 00**	10,8	240 : 1	200	300	6,7	60	195	56,5	26	0,45
430 310 01	**430 401 00**	9,6	270 : 1	200	300	6,7	60	181	42,5	15	0,43
430 311 01	**430 401 00**	7,2	360 : 1	200	300	6,7	60	195	56,5	26	0,45
430 312 01	**430 401 00**	6,4	405 : 1	220	300	6,7	60	181	42,5	15	0,43
430 313 01	**430 401 00**	5,4	480 : 1	220	300	6,7	50	195	56,5	26	0,45
430 314 01	**430 401 00**	4,8	540 : 1	220	300	6,7	55	195	56,5	26	0,45
430 315 01	**430 401 00**	3,6	720 : 1	220	300	6,7	50	195	56,5	26	0,45
430 316 01	**430 401 00**	3,2	810 : 1	220	300	6,7	55	195	56,5	26	0,45
430 317 01	**430 401 00**	2,7	960 : 1	220	300	6,7	45	195	56,5	26	0,45
430 318 01	**430 401 00**	2,4	1080 : 1	220	300	6,7	45	195	56,5	26	0,45
430 319 01	**430 401 00**	2,1	1215 : 1	220	300	6,7	45	195	56,5	26	0,45
430 320 01	**430 401 00**	1,8	1440 : 1	220	300	6,7	45	195	56,5	26	0,45
430 321 01	**430 401 00**	1,6	1620 : 1	220	300	6,7	45	195	56,5	26	0,45
430 322 01	**430 401 00**	1,2	2160 : 1	220	300	6,7	45	195	56,5	26	0,45
430 323 01	**430 401 00**	1,06	2430 : 1	220	300	6,7	45	195	56,5	26	0,45
430 324 01	**430 401 00**	0,80	3240 : 1	240	300	6,7	45	195	56,5	26	0,45
430 325 01	**430 401 00**	0,71	3645 : 1	240	300	6,7	45	195	56,5	26	0,45
430 326 01	**430 401 00**	0,60	4320 : 1	240	300	6,7	45	195	56,5	26	0,45
430 327 01	**430 401 00**	0,53	4860 : 1	240	300	6,7	40	195	56,5	26	0,45
430 328 01	**430 401 00**	0,40	6480 : 1	240	300	6,7	40	195	56,5	26	0,45
430 329 01	**430 401 00**	0,35	7290 : 1	240	300	6,7	40	195	56,5	26	0,45
430 330 01	**430 401 00**	0,30	8640 : 1	240	300	6,7	40	195	56,5	26	0,45
430 331 01	**430 401 00**	0,26	9720 : 1	240	300	6,7	40	195	56,5	26	0,45

To prevent the gearbox from being overloaded, the max. continuous torques and starting torques stated above must not be exceeded. The effective transmissible torque corresponds to the values at the gearbox shaft. At reversed operation, the load limit must be multiplied with 0.75.

Small Geared Motors GE/I with DC Motor

General data: Light model range, extremely high ratios.
Housing: Aluminium die-cast, sealed against lubricant leaks and protected against dust, can be mounted in any position.
Gearing: Depending on the arrangement of the gear stages milled from high-grade platic or steel.
Bearing system: Motor: roller bearing. Gearbox: sintered bronze slide bearing.
Lubrication: Maintenance free grease lubrication.
Motor: DC motor for 12 Volt or 24 Volt. Pinion pressed onto motor shaft. Free lead ends. Sense of rotation can be changed by swopping leads over
Protection class IP 21. Insulation class E. Operation mode S1.

Please note: At continuous operation the motor heats up to 50 to 60°C.

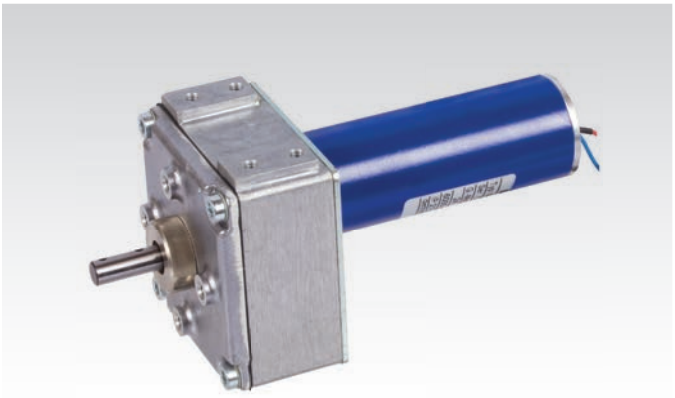

Ordering details: e.g.: Type, **Product No. DC Motor**
Product No. Gearbox

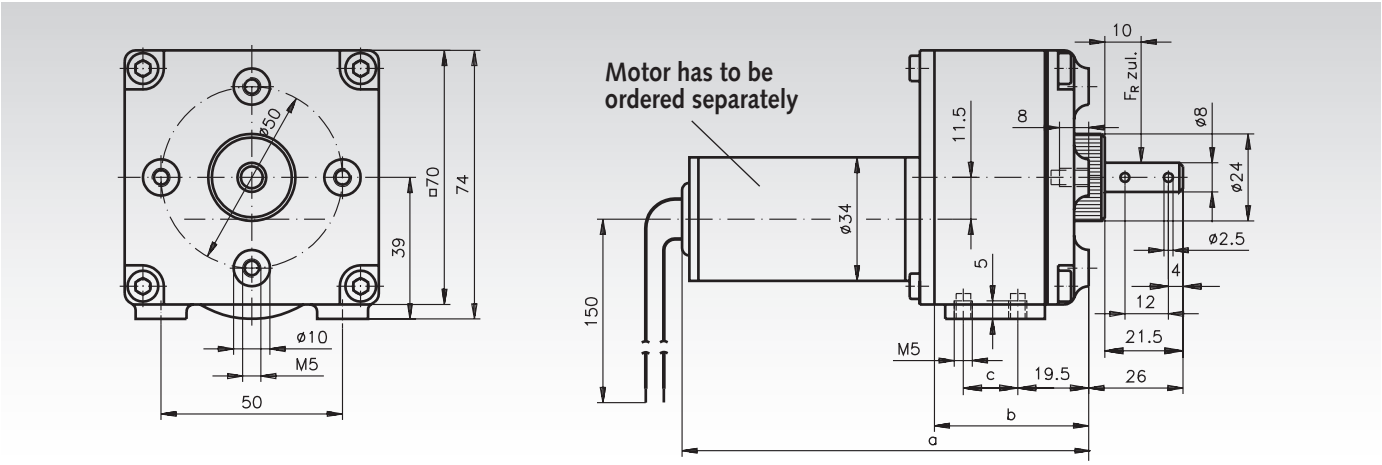

DC motor 12 Volt: Product No. 430 403 00

Motor and gearbox have to be ordered separately.

DC motor 24 Volt: Product No. 430 405 00. Weight 0.33 kg

Gearbox Product No.	Output Speed Relating to Motor speed 6000 min^{-1}	Ratio i	max. continous Torque Ncm	max. starting Torque Ncm	Nominal Power Watt	Gearbox Efficiency %	Dimensions a mm	b mm	c mm	Weight Gearbox kg
430 301 01	400	15 : 1	30	40	13	80	138	42,5	15	0,3
430 302 01	200	30 : 1	42	65	8,8	72	138	42,5	15	0,3
430 303 01	134	45 : 1	62	90	8,7	72	138	42,5	15	0,3
430 304 01	100	60 : 1	70	120	7,3	70	123	42,5	15	0,3
430 305 01	67	90 : 1	100	180	7,0	70	123	42,5	15	0,3
430 306 01	50	120 : 1	130	230	6,8	65	123	42,5	15	0,3
430 307 01	44	135 : 1	150	260	7,0	65	123	42,5	15	0,3
430 308 01	33	180 : 1	150	260	5,2	65	123	42,5	15	0,3
430 309 01	25	240 : 1	200	300	5,2	60	137	56,5	26	0,45
430 310 01	22	270 : 1	200	300	4,7	60	123	42,5	15	0,43
430 311 01	17	360 : 1	200	300	3,5	60	137	56,5	26	0,45
430 312 01	15	405 : 1	220	300	3,4	60	123	42,5	15	0,43
430 313 01	13	480 : 1	220	300	2,9	50	137	56,5	26	0,45
430 314 01	11	540 : 1	220	300	2,6	55	137	56,5	26	0,45
430 315 01	8,3	720 : 1	220	300	1,9	50	137	56,5	26	0,45
430 316 01	7,4	810 : 1	220	300	1,7	55	137	56,5	26	0,45
430 317 01	6,3	960 : 1	220	300	1,4	45	137	56,5	26	0,45
430 318 01	5,6	1080 : 1	220	300	1,3	45	137	56,5	26	0,45
430 319 01	4,9	1215 : 1	220	300	1,1	45	137	56,5	26	0,45
430 320 01	4,2	1440 : 1	220	300	0,96	45	137	56,5	26	0,45
430 321 01	3,7	1620 : 1	220	300	0,85	45	137	56,5	26	0,45
430 322 01	2,8	2160 : 1	220	300	0,64	45	137	56,5	26	0,45
430 323 01	2,5	2430 : 1	220	300	0,57	45	137	56,5	26	0,45
430 324 01	1,9	3240 : 1	240	300	0,47	45	137	56,5	26	0,45
430 325 01	1,6	3645 : 1	240	300	0,41	45	137	56,5	26	0,45
430 326 01	1,4	4320 : 1	240	300	0,35	45	137	56,5	26	0,45
430 327 01	1,2	4860 : 1	240	300	0,31	40	137	56,5	26	0,45
430 328 01	0,9	6480 : 1	240	300	0,23	40	137	56,5	26	0,45
430 329 01	0,8	7290 : 1	240	300	0,21	40	137	56,5	26	0,45
430 330 01	0,7	8640 : 1	240	300	0,17	40	137	56,5	26	0,45
430 331 01	0,6	9720 : 1	240	300	0,16	40	137	56,5	26	0,45

To prevent the gearbox from being overloaded, the max. continuous and starting torques stated above must not be exceeded. The effective transmissible torque corresponds to the values at the gearbox shaft.

Helical Small Geared Motor SF with DC motor, 24V

Housing: Steel, zinc-plated.
Can be mounted in any position.
Teeth: Steel gears.
Bearing: Sintered bronze plain bearings.
Lubrication: Maintenance free grease lubrication.
Motor: DC motor 24 V. motor speed 6500 min^{-1}, interference-free. Change the direction of rotation by switching the polarity.
Protection class acc. to EN 60529: IP 20.
Operating mode as per VDE 0530: S2-10 min.
Permissible ambient operating temperature: -10 to +60°C.

Ideal drive for short term operation, e.g. for actuating device.



Ordering Details: e.g.: Type, idle speed, Product No.

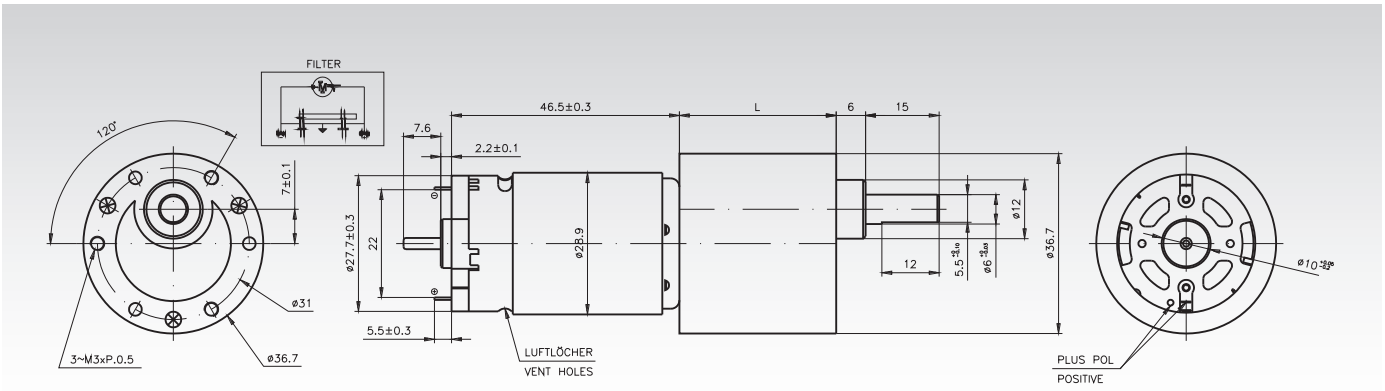

Product No. 24V	Idle Speed n_0 min^{-1}	Nominal Speed n_N min^{-1}	Nominal Torque M_N Nm	Nominal Current I_N A	Nominal Power P_N W	Tightening Torque M_A Nm	Ratio i	Dimension L mm	Weight g
430 460 24	2	1,5	2,00	0,4	0,31	2,1	3000:1	32,0	220
430 461 24	6	5,0	1,60	0,4	0,84	1,9	1000:1	29,5	210
430 463 24	27	22,0	1,30	0,4	2,99	1,6	250:1	27,0	200
430 464 24	43	38,0	0,80	0,4	3,18	1,2	150:1	27,0	200
430 466 24	90	75,0	0,45	0,6	3,53	0,8	75:1	24,5	200
430 467 24	130	115,0	0,30	0,6	3,61	0,6	50:1	24,5	200
430 468 24	210	190,0	0,18	0,6	3,58	0,4	30:1	22,0	190
430 469 24	610	530,0	0,10	0,6	5,55	0,2	10:1	19,5	190

Permissible radial shaft load F_R: (10 mm from bearing collar): 9.8 N.
Permissible axial shaft load F_A: 6.7 N.

Note

All values are averages, measured with the motor cold. Deviations of 15% are possible.
To prevent the gearbox from being overloaded, the stated limit loads must not be exceeded.

Other types (other speeds, optional incremental encoder) available on request.

Speed controllers
Page 696



Small Worm Geared Motors SFS Size 2 with DC Motor 12 or 24V

Housing: Motor: Steel, zinc-plated. Gearbox: Aluminium.
Can be mounted in any position.
Teeth: Worm gear set made from plastic.
Bearing: Output side, plain bearing, motor side, ball bearing.
Lubrication: Maintenance free grease lubrication.
Motor: DC motor 12 V or 24 V, interference-free.
Change the direction of rotation by switching the polarity.
Protection class acc. to EN 60529: IP 30.
Operating mode as per VDE 0530: S2-10 min.
Permissible ambient operating temperature: -10 to +60°C.

Ideal drive for short term operation, e.g. for actuating devices.



Ordering Details: e.g.: Type, idle speed, Product No.

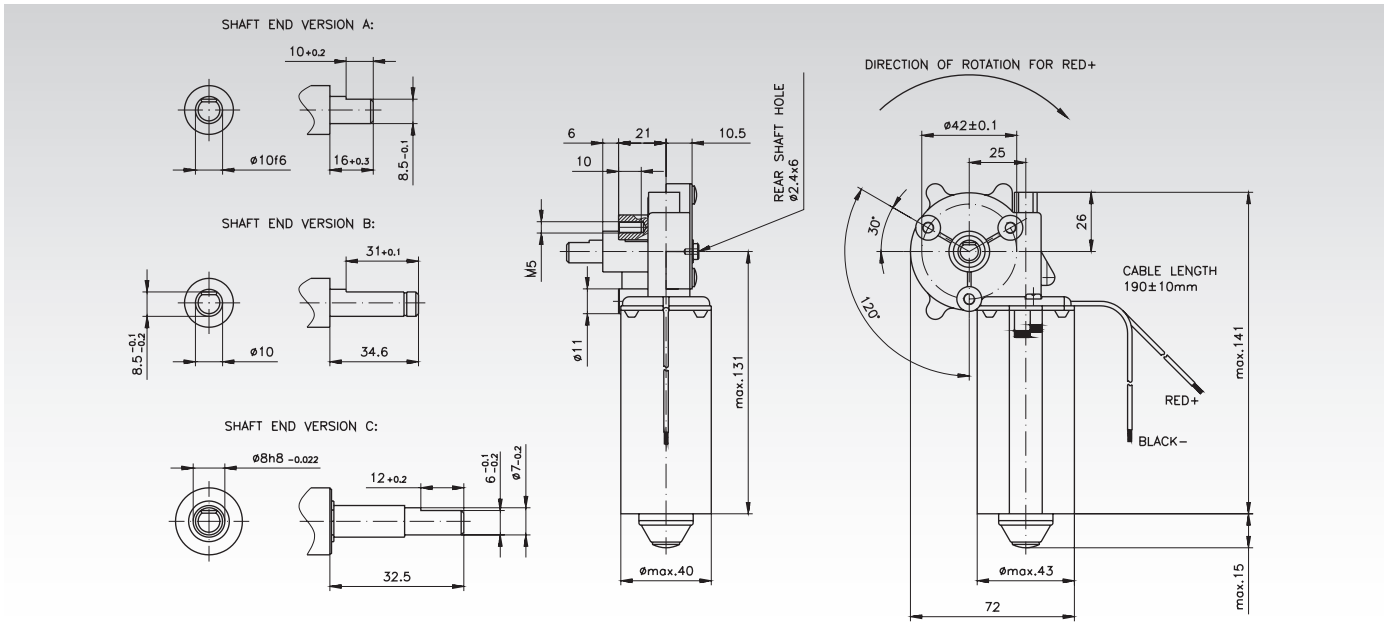

Product No.	Nominal Voltage V	Idle Speed n_0 min^{-1}	Nominal Speed n_N min^{-1}	Nominal Torque M_N Nm	Nominal Current I_N A	Nominal Power P_N W	Tightening Torque M_A Nm	Ratio i	Shaft-End Type	Weight g
430 470 12	12	25	21,0	1,00	0,9	2,1	6	62:1	A	700
430 470 24	24	35	28,0	2,00	1,0	5,9	10	62:1	A	700
430 471 24	24	50	40,0	2,00	1,48	8,4	10	62:1	B	700
430 472 24	24	95	69,0	5,00	3,1	35,0	18	62:1	A	700
430 473 24	24	140	124,0	2,00	3,0	26,0	18	62:1	B	700
430 474 24	24	210	158,0	2,00	4,0	33,0	8	59:3	C	700

Permissible radial shaft load F_R: 60 N (10 mm from bearing collar).
Permissible axial shaft load F_A: 10 N tensile load or 15 N compressive load.

Note

All values are averages, measured with the motor cold. Deviations of 10% are possible.
To prevent the gearbox from being overloaded, the stated limit loads must not be exceeded.

Other types on request.

Factory interference suppression

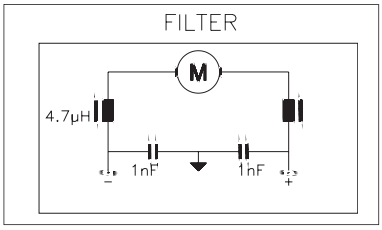

Small Worm Geared Motors SFS Size 3 with DC Motor 12 or 24V

Housing: Motor: Steel, zinc-plated. Gearbox: Aluminium.
Can be mounted in any position.
Teeth: Worm gear set made from plastic.
Bearing: Output side, plain bearing, motor side, ball bearing.
Lubrication: Maintenance free grease lubrication.
Motor: DC motor 12 V or 24 V, interference-free.
Change the direction of rotation by switching the polarity.
Protection class acc. to EN 60529: IP 30.
Operating mode as per VDE 0530: S2-10 min.
Permissible ambient operating temperature: -10 to +60°C.

Caution: Output shaft and shaft form side as per the table.



Picture:
Output shaft right

Ordering Details: e.g.: Type, idle speed, Product No.

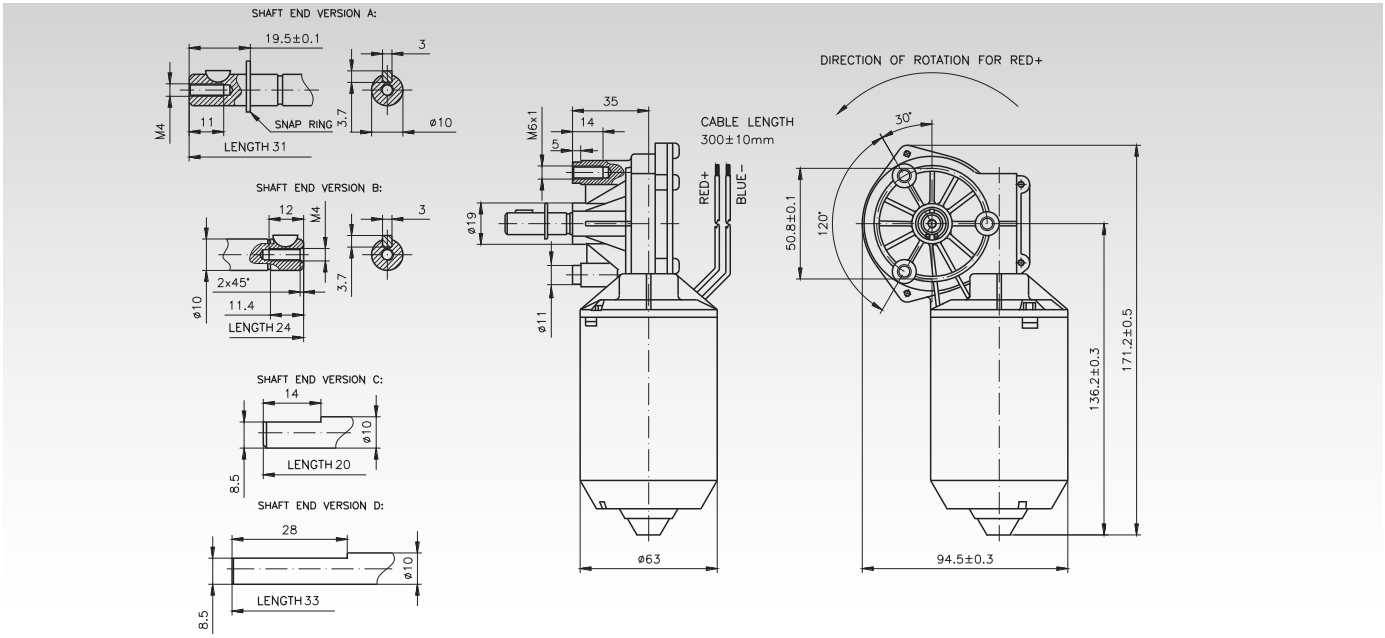

Product No. 24V	Idle Speed n_0 min^{-1}	Nominal Speed n_N min^{-1}	Nominal Torque M_N Nm	Nominal Current I_N A	Nominal Power P_N W	Tightening Torque M_A Nm	Ratio i	Output-Shaft Side	Shaft-end Type	Weight g
430 480 24	13	7,4	6,0	1,0	4,6	14,0	69:1	right	A	1100
430 481 24	35	24,7	10,0	2,9	26,0	34,0	69:1	right	B	1100
430 482 24	50	41,0	2,5	1,0	11,0	14,0	52:2	left	A	1100
430 484 24	110	88,0	3,3	2,9	30,0	17,0	52:2	left	A	1100
430 486 24	180	170,0	1,3	2,4	23,0	25,0	52:2	right	A	1100
430 487 24	240	192,0	1,5	2,7	30,0	7,5	44:4	left	C	1100
430 488 24	280	249,0	1,0	3,0	26,0	9,0	44:4	left	D	1100
430 489 24	580	543,0	1,0	5,3	56,0	16,0	41:4	right	D	1100

Permissible radial shaft load F_R: 120 N (10 mm from bearing collar).
Permissible axial shaft load F_A: 15 N tensile load or 10 N compressive load.

Note

All values are averages, measured with the motor cold. Deviations of 10% are possible.
To prevent the gearbox from being overloaded, the stated limit loads must not be exceeded.

Other types on request.

Speed controllers
Page 696



Factory interference suppression

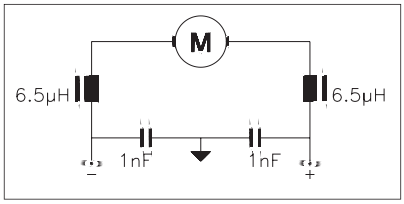

Small Worm Geared Motors Type SG with Permanent Magnet DC Motor 24V

Housing: Aluminium, sealed against lubricant leaks and protected against dust, can be mounted in any position.
Output shaft: Optional on side 1 or side 2.
Teeth: Worm gear made from special brass, worm made from steel, hardened and ground.
Bearing: Motor and gearbox with roller bearing.
Lubrication: Maintenance free grease lubrication.
Motor: Permanent magnet DC Motor 24 V.
Nominal motor speed 3,000 min^{-1}, with relatively constant speed characteristics. Free lead ends. Sense of rotation can be changed by swapping leads over.
Protection class IP 40. Insulation class B. Operating mode S1.

Ordering Details: e.g.: Type, Power, Output Side, Output Speed, Product No.

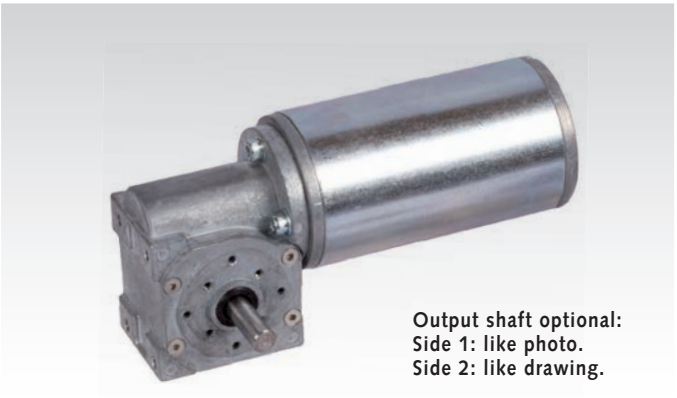

Output shaft optional:
Side 1: like photo.
Side 2: like drawing.

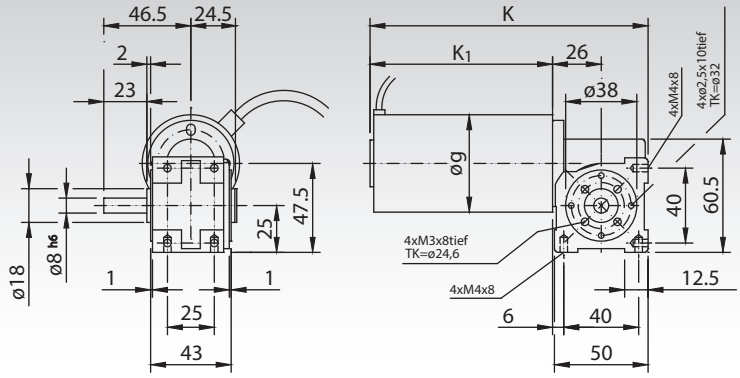

Output shaft optional:
Side 1: like photo.
Side 2: like drawing.

Other dimensions:

Power Watt	g mm	k mm	k_1 mm
28	52	149	98
54	52	179	128

Dimensions without stated tolerances are non-binding!

Load Bearing Capacity of the Output Shaft: radial 40 N, axial 40 N

Motor Data 28 Watt, 3000 min^{-1}, ca. 2.0 A at 24 Volt

Product No. Output Side 1	Product No. Output Side 2	Output-Speed min^{-1}	Ratio i =	Torque at the Output Shaft effective Nm	max. permissible* Nm	Weight kg
430 491 01	**430 492 01**	44	68 : 1	2,1	4,2	1,3
430 491 02	**430 492 02**	75	40 : 1	1,2	4,7	1,3
430 491 03	**430 492 03**	100	30 : 1	1,0	4,3	1,3
430 491 04	**430 492 04**	143	21 : 1	0,9	4,1	1,3
430 491 05	**430 492 05**	200	15 : 1	0,7	3,7	1,3
430 491 06	**430 492 06**	286	10,5 : 1	0,6	4,1	1,3
430 491 07	**430 492 07**	429	7 : 1	0,4	4,3	1,3
430 491 08	**430 492 08**	1000	3 : 1	0,2	2,6	1,3

* Stability related max. torque.

Motor Data 54 Watt, 3000 min^{-1}, ca. 3.0 A at 24 Volt

Product No. Output Side 1	Product No. Output Side 2	Output-Speed min^{-1}	Ratio i =	Torque at the Output Shaft effective Nm	max. permissible* Nm	Weight kg
430 491 09	**430 492 09**	44	68 : 1	4,0	4,2	1,6
430 491 10	**430 492 10**	75	40 : 1	2,3	4,7	1,6
430 491 11	**430 492 11**	100	30 : 1	2,0	4,3	1,6
430 491 12	**430 492 12**	143	21 : 1	1,7	4,1	1,6
430 491 13	**430 492 13**	200	15 : 1	1,4	3,7	1,6
430 491 14	**430 492 14**	286	10,5 : 1	1,1	4,1	1,6
430 491 15	**430 492 15**	429	7 : 1	0,9	4,3	1,6
430 491 16	**430 492 16**	1000	3 : 1	0,4	2,6	1,6

* Stability related max. torque.

Small Worm Geared Motors Type SG-H with Permanent magnet DC Motor 24V, with Hollow Shaft

Housing: Aluminium, sealed against lubricant leaks and protected against dust, can be mounted in any position.
Output shaft: Hollow shaft.
Teeth: Worm gear made from special brass, worm made from steel, hardened and ground.
Bearing: Motor and gearbox with roller bearing.
Lubrication: Maintenance free grease lubrication.
Motor: Permanent magnet DC Motor 24 V.
Nominal motor speed 3,000 min^{-1}, with relatively constant speed characteristics. Free lead ends. Sense of rotation can be changed by swapping leads over.
Protection class IP 40. Insulation class B. Operating mode S1.



Ordering Details: e.g.: Type, Power, Output Speed, Product No.

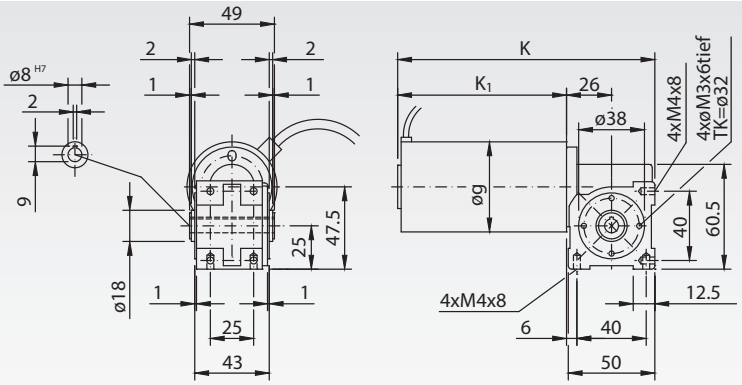

With hollow shaft

Other dimensions:

Power Watt	g mm	k mm	k_1 mm
28	52	149	98
54	52	179	128

Dimensions without stated tolerances are non-binding!

Load Bearing Capacity of the Output Shaft: radial 40 N, axial 40 N

Motor Data 28 Watt, 3000 min^{-1}, ca. 2.0 A at 24 Volt

Product No. with Hollow Shaft	Output-Speed min^{-1}	Ratio i =	Torque at the Output Shaft effective Nm	max. permissible* Nm	Weight kg
430 490 01	44	68 : 1	2,1	4,2	1,3
430 490 03	100	30 : 1	1,0	4,3	1,3
430 490 05	200	15 : 1	0,7	3,7	1,3
430 490 07	429	7 : 1	0,4	4,3	1,3

* Stability related max. torque.

Motor Data 54 Watt, 3000 min^{-1}, ca. 3.0 A at 24 Volt

Product No. with Hollow Shaft	Output-Speed min^{-1}	Ratio i =	Torque at the Output Shaft effective Nm	max. permissible* Nm	Weight kg
430 490 09	44	68 : 1	4,0	4,2	1,6
430 490 11	100	30 : 1	2,0	4,3	1,6
430 490 13	200	15 : 1	1,4	3,7	1,6
430 490 15	429	7 : 1	0,9	4,3	1,6

* Stability related max. torque.

Planetary Small Geared Motor PE with DC Motor, Size 1

Housing: Steel, zinc-plated, sealed against lubricant leaks and protected against dust, can be mounted in any position.
Gearbox: 1st gearbox stage: plastic gears, other gears made from steel.
Bearing: Motor roller bearing. Gearbox: sintered bronze plain bearing.
Lubrication: Maintenance free grease lubrication.
Motor: DC motor 24 V. Nominal motor speed 6,000 min^{-1},
Pinion milled into motor shaft. Free lead ends.
Sense of rotation can be changed by swapping leads over.
Protection class according to VDE 0530: IP 21.
Insulation class according to VDE 0530: E.
Operating mode as per VDE 0530: S1.



Ordering Details: e.g.: Type, Size 1, Voltage, Output Speed, Product No.

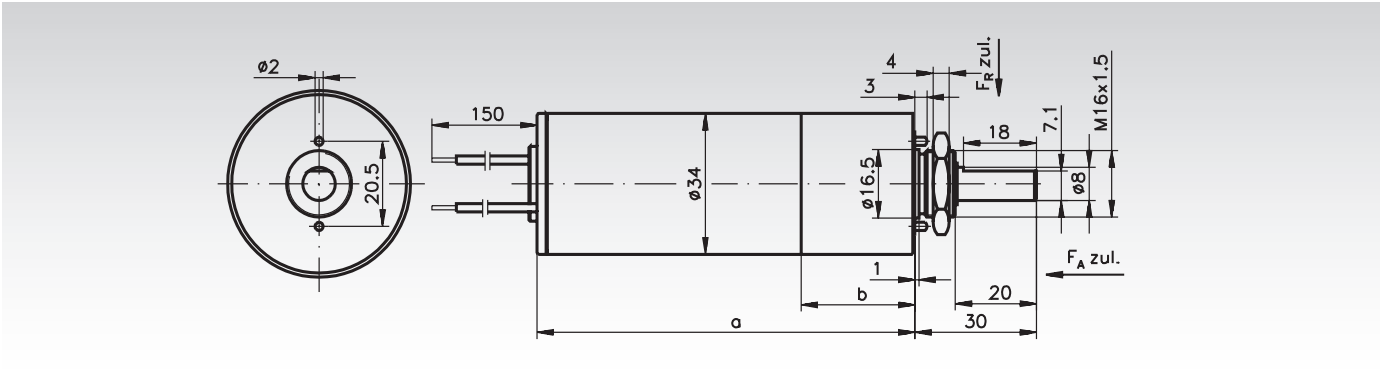

Size 1

Product No. 24 V	Nominal Output Speed min^{-1}	Ratio i	max. continous Torque Nm	max. Starting Torque Nm	Nominal Motor Power W	Output Power W	Gearbox Efficiency %	a mm	b mm	Weight kg
430 440 24	200	30:1	0,46	0,6	12	9,6	80	141	27	0,55
430 441 24	67	90:1	1,20	1,8	12	8,4	70	148	34	0,6
430 442 24	50	120:1	1,60	2,2	12	8,4	70	148	34	0,6
430 443 24	29	210:1	2,80	3,3	12	8,4	70	148	34	0,6
430 444 24	22	270:1	2,90	3,3	10	6,7	65	155	41	0,65

Permissible radial shaft load F_R: 30 N (middle shaft).
Permissible axial shaft load F_A: 0 N.
Tolerances +/- 10%.

Note

The efficiency stated in the table is valid for properly run-in gearboxes at operating temperature. To prevent the gearbox from being overloaded, the stated limit loads must not be exceeded. At reversed operation the limit loads must be multiplied with the factor 0.75.

Also available as an option with 12 V motors and larger gear ratio up to 54880:1.

Planetary Small Geared Motor PE with DC Motor, Size 2

Housing: Steel, zinc-plated, sealed against lubricant leaks and protected against dust, can be mounted in any position.
Gearbox: 1st gearbox stage: plastic gears, other gears made from steel.
Bearing: Motor roller bearing. Gearbox roller bearing / plain bearing.
Lubrication: Maintenance free grease lubrication.
Motor: DC motor 24 V. Nominal motor speed 3,000 min^{-1}, Pinion milled into motor shaft. Free lead ends. Sense of rotation can be changed by swapping leads over.
Protection class according to VDE 0530: IP 41.
Insulation class according to VDE 0530: F.
Operating mode as per VDE 0530: S1.



Ordering Details: e.g.: Type, Size 2, Voltage, Output Speed, Product No.

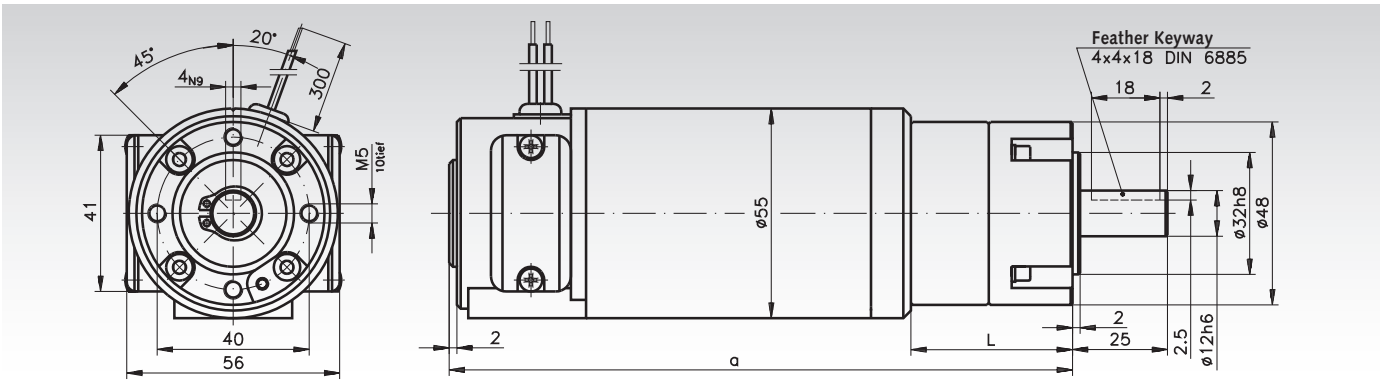

Size 2

Product No. 24 V	Nominal Output Speed min^{-1}	Ratio i	max. continous Torque Nm	max. Starting Torque Nm	Nominal Motor Power W	Output Power W	Gearbox Efficiency %	a mm	b mm	Weight kg
430 450 24	600	5:1	1,00	3,0	54	49	90	164,5	43,0	1,5
430 451 24	500	6:1	1,30	3,5	54	49	90	164,5	43,0	1,5
430 452 24	392	7,66:1	1,00	3,0	46	41	90	164,5	43,0	1,5
430 453 24	143	21:1	3,20	12,0	55	47	85	181,0	59,5	1,6
430 454 24	120	25:1	4,00	14,5	55	47	85	181,0	59,5	1,6
430 455 24	100	30:1	4,80	14,5	55	47	85	181,0	59,5	1,6
430 456 24	83	36:1	5,50	16,0	55	47	85	181,0	59,5	1,6
430 457 24	65	46:1	5,60	16,0	45	38	85	181,0	59,5	1,6
430 458 24	51	59:1	6,00	16,0	48	32	85	181,0	59,5	1,6

Permissible radial shaft load F_R: from i=5:1 to i=7,66:1: 112 N; from i=21:1 to i=59:1: 150 N (always middle shaft).
Permissible axial shaft load F_A: from i=5:1 to i=7,66:1: 100 N; from i=21:1 to i=59:1: 110 N.
Tolerances +/- 10%.

Note

The efficiency stated in the table is valid for properly run-in gearboxes at operating temperature. To prevent the gearbox from being overloaded, the stated limit loads must not be exceeded. At reversed operation the limit loads must be multiplied with the factor 0.75.

Optionally also available with DC speed sensor, incremental encoder and brake.

Also available as an option with larger gear ratio up to 450:1.

Speed controllers
Page 696



Small Geared Motor SE with DC Motor, Size 1

Housing: Aluminium, sealed against lubricant leaks and protected against dust, can be mounted in any position.
Teeth: Worm gear made from plastic, worm made from steel, ground. Not self-locking.
Bearing: Motor and gearbox with roller bearing.
Lubrication: Maintenance free grease lubrication.
Motor: DC Motor 12 V or 24 V.
Nominal motor speed 6,000 min^{-1}, worm pinned on motor shaft. Free lead ends. Sense of rotation can be changed by swapping leads over.
Protection class according to VDE 0530: IP 21
Insulation class according to VDE 0530: E
Operating mode as per VDE 0530: S1



Ordering Details: e.g.: Type, Size 1, Voltage, Output Speed, Product No.

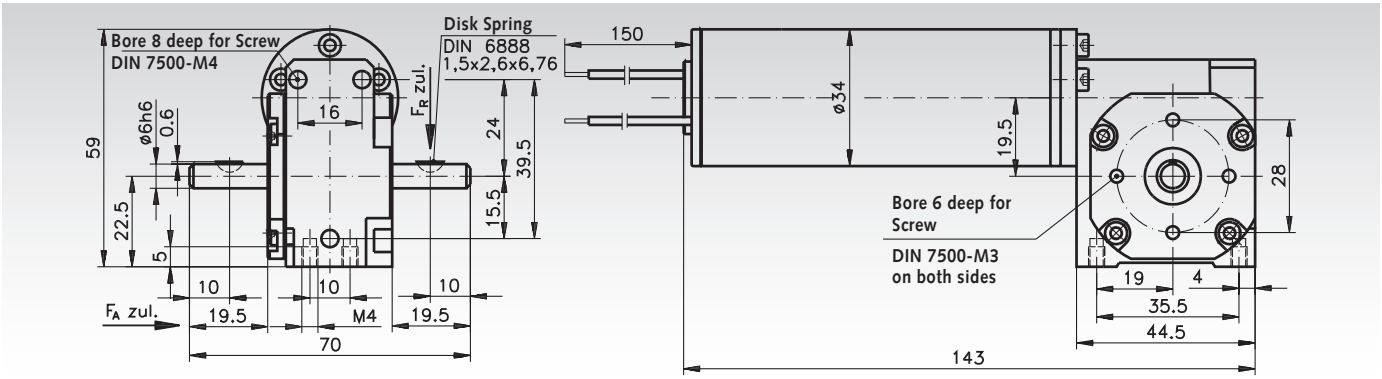

Size 1

Product No. 12 V	Product No. 24 V	Nominal Output Speed min^{-1}	Ratio i	max. continous Torque Nm	max. Starting Torque Nm	Nominal Motor Power W	Output Power W	Gearbox Efficiency %	Weight kg
430 410 12	**430 410 24**	822	7,3:1	0,15	0,83	16	13	79	0,52
430 411 12	**430 411 24**	522	11,5:1	0,23	1,3	16	12	77	0,52
430 412 12	**430 412 24**	400	15:1	0,28	1,7	16	12	73	0,52
430 413 12	**430 413 24**	261	23:1	0,41	2,0	16	11	70	0,52
430 414 12	**430 414 24**	200	30:1	0,55	2,0	16	11	66	0,52
430 415 12	**430 415 24**	158	38:1	0,63	1,2	16	10	65	0,52

Permissible radial shaft load F_R: 30 N (middle shaft).
Permissible axial shaft load F_A: 12 N.
Tolerances +/- 10%.

Note

The efficiency stated in the table is valid for properly run-in gearboxes at operating temperature. To prevent the gearbox from being overloaded, the stated limit loads must not be exceeded. At reversed operation the limit loads must be multiplied with the factor 0.75.

Small Geared Motor SE with DC Motor, Size 2

Housing: Aluminium, sealed against lubricant leaks and protected against dust, can be mounted in any position.
Teeth: Worm gear made from plastic, worm made from steel, ground. Not self-locking.
Bearing: Motor and gearbox with roller bearing.
Lubrication: Maintenance free grease lubrication.
Motor: DC motor 24 V.
Nominal motor speed 3,000 min^{-1}, worm pinned on motor shaft.
Free lead ends. Sense of rotation can be changed by swapping leads over. *Brake on request.
Protection class according to VDE 0530: IP 41.
Insulation class according to VDE 0530: F.
Operating mode as per VDE 0530: S1.

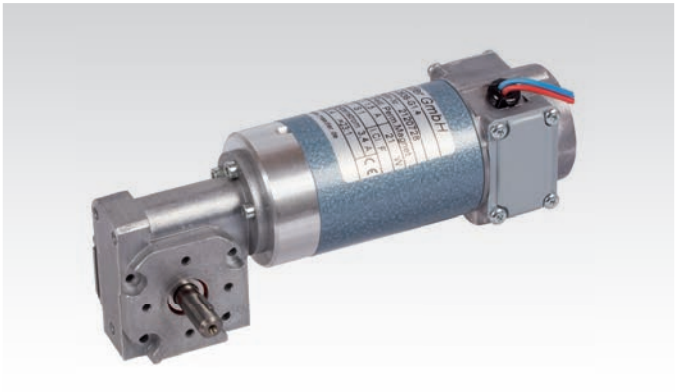

Ordering Details: e.g.: Type, Size 2, Voltage, Output Speed, Product No.

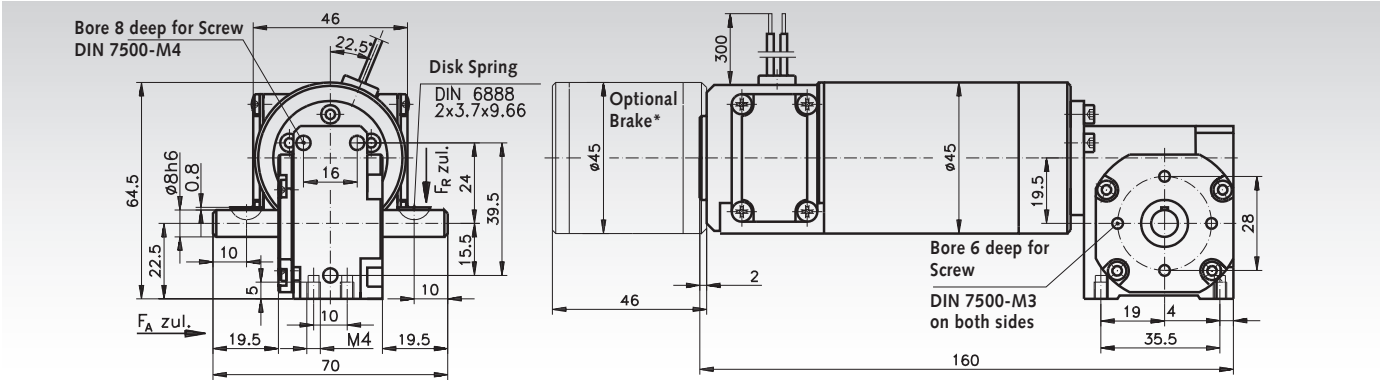

Size 2

Product No. 24 V	Nominal Output Speed min^{-1}	Ratio i	max. continuous Torque Nm	Max. Starting Torque Nm	Nominal Motor power W	Output Power W	Gearbox Efficiency %	Weight kg
430 420 24	411	7,3:1	0,35	2,0	20	15	76	0,8
430 421 24	261	11,5:1	0,50	2,0	19	14	73	0,8
430 422 24	200	15:1	0,65	2,0	20	14	70	0,8
430 423 24	130	23:1	1,00	2,0	21	14	67	0,8
430 424 24	100	30:1	1,10	2,0	19	12	63	0,8
430 425 24	79	38:1	1,05	1,2	15	9	60	0,8

Permissible radial shaft load F_R: 110 N (middle shaft).
Permissible axial shaft load F_A: 60 N.
Tolerances +/- 10%.

Note

The efficiency stated in the table is valid for properly run-in gearboxes at operating temperature. To prevent the gearbox from being overloaded, the stated limit loads must not be exceeded. At reversed operation the limit loads must be multiplied with the factor 0.75.

* Optionally also available with DC speed sensor, incremental encoder and brake.

Speed controllers
Page 696



Small Geared Motor SE with DC Motor, Size 3

Housing: Aluminium, sealed against lubricant leaks and protected against dust, can be mounted in any position.
Teeth: Worm gear made from plastic, worm made from steel, ground. Not self-locking.
Bearing: Motor and gearbox with roller bearing.
Lubrication: Maintenance free grease lubrication.
Motor: DC motor 24 V.
Worm pinned on motor shaft. Free lead ends.
Sense of rotation can be changed by swapping leads over.
Protection class according to VDE 0530: IP 41.
Insulation class according to VDE 0530: F.
Operating mode as per VDE 0530: S1.

Ordering Details: e.g.: Type, Size 3, Voltage, Output Speed, Product No.



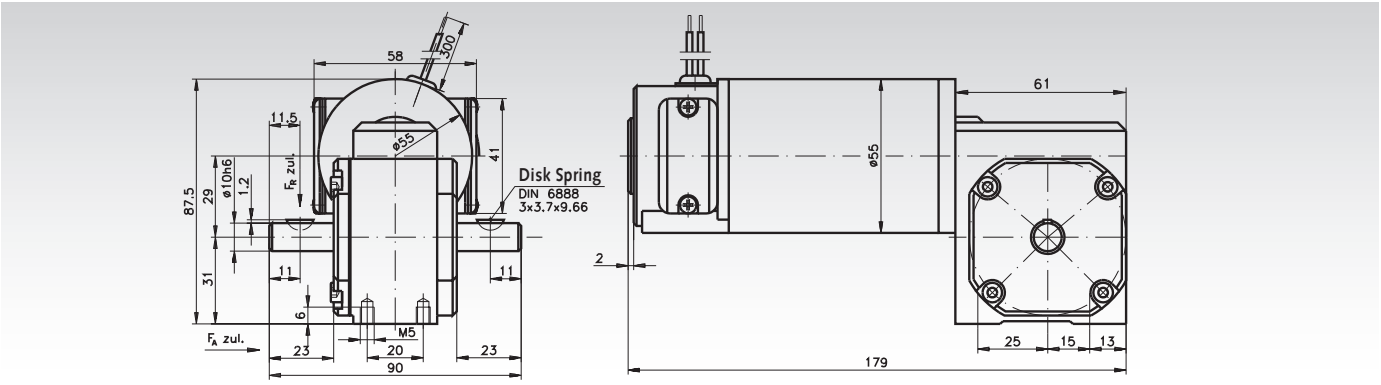

Size 3

Product No. 24 V	Nominal Output Speed min^{-1}	Ratio i	Nominal Motor Speed min^{-1}	max. continous Torque Nm	max. Starting Torque Nm	Nominal Motor Power W	Output Power W	Gearbox Efficiency %	Weight kg
430 430 24	833	4,8:1	4000	0,70	7,0	70	57	82	1,6
430 431 24	625	4,8:1	3000	0,70	7,0	55	45	82	1,6
430 432 24	429	9,33:1	4000	1,30	7,0	70	56	80	1,6
430 433 24	333	12:1	4000	1,60	7,0	70	56	80	1,6
430 434 24	276	14,5:1	4000	1,95	7,0	70	56	80	1,6
430 435 24	200	20:1	4000	2,40	8,0	70	49	70	1,6
430 436 24	160	25:1	4000	2,70	8,0	68	45	66	1,6
430 437 24	133	30:1	4000	3,00	7,0	63	42	67	1,6
430 438 24	100	30:1	3000	3,20	7,0	52	34	66	1,6
430 439 24	83	36:1	3000	2,40	5,0	34	21	62	1,6

Permissible radial shaft load F_R: 150 N (middle shaft).
Permissible axial shaft load F_A: 60 N.
Tolerances +/- 10%.

Note

The efficiency stated in the table is valid for properly run-in gearboxes at operating temperature. To prevent the gearbox from being overloaded, the stated limit loads must not be exceeded. At reversed operation the limit loads must be multiplied with the factor 0.75.

Optionally also available with DC speed sensor, incremental encoder and brake.

Helical Geared Motors HR/I

Housing: Aluminium, corrosion-inhibiting coating, with mounting holes for foot and flange mounting and with removable twist cap for easy service.
Gearing: Hardened and ground.
Lubrication: Synthetic oil (lubricated for life).
Motor: Standard three-phase motor with small flange B14, 230/400V, 50 Hz.

From 0.75 kW in efficiency class IE3.

Other Motor versions (AC Motor, posistor, forced ventilation, break etc.) on request.

Light-weight, high-quality model range with many mounting options.

These maintenance free, geared motors without ventilation can be used in **any mounting position.**

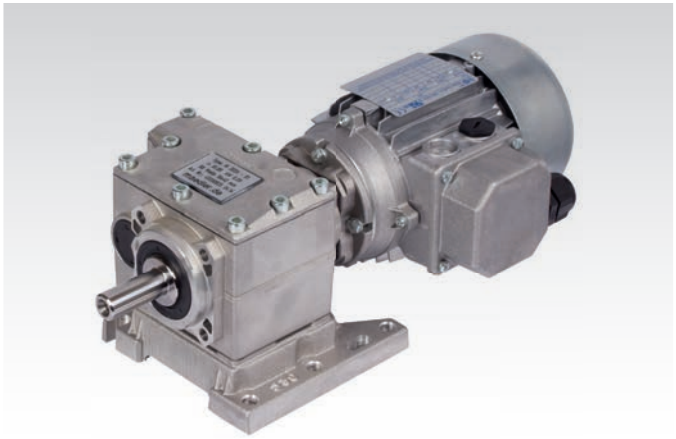

Variable mounting:
These geared motors are supplied with a screwed-on foot mounting. If flange mounting is required or if the motor is to be mounted on an existing base plate, this foot can simply be unscrewed.

Retrofittable flange:
If the motor is to be flange mounted on the output side, a flange can be srewed on by the customer. These flanges B5 are available in several diameters and have to be ordered separately.

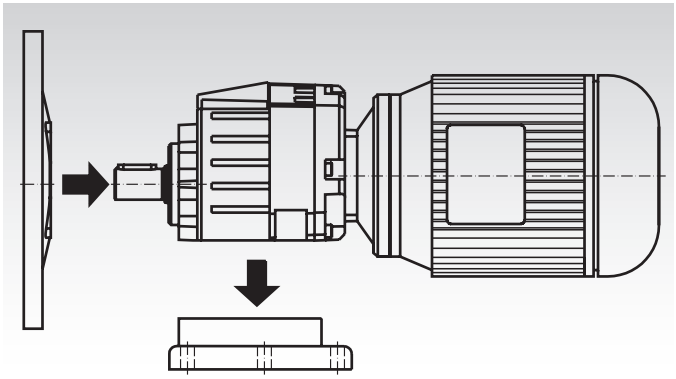

Ordering details: e.g.: Prod. No., Type, Motor Power, Output Speed
If required: Output Flange, Prod. No., Diameter

Product No. Model B3	P kW	n_2 min^{-1}	M_a Nm	f_B	$i_{ges.}$	F_R [1] N	F_A [2] N	Gearbox Size	Motor Size	Weight kg
432 009 05	0,09	5,1	157	1,0	177,09	3000	600	40/3	63A6	10,10
432 009 10	0,09	7,9	101	1,6	177,09	3000	600	40/3	56B4	9,20
432 009 15	0,09	10,3	77	2,1	135,69	3000	600	40/3	56B4	9,20
432 009 20	0,09	14,5	55	2,9	96,85	3000	600	40/3	56B4	9,20
432 009 25	0,09	22,6	36	1,9	61,89	1900	380	20/2	56B4	6,60
432 009 30	0,09	28,1	29	2,4	49,76	1900	380	20/2	56B4	6,60
432 009 35	0,09	37,1	22	3,2	37,69	1900	380	20/2	56B4	6,60
432 009 40	0,09	53	16	3,9	26,31	1900	380	20/2	56B4	6,60
432 009 45	0,09	66	12	4,8	21,15	1900	380	20/2	56B4	6,60
432 009 50	0,09	75	11	5,4	18,78	1700	340	20/2	56B4	6,60
432 009 55	0,09	93	9	6,7	15,10	1500	340	20/2	56B4	6,60
432 009 60	0,09	107	8	7,8	13,03	1500	340	20/2	56B4	6,60
432 009 65	0,09	123	7	8,9	11,42	1500	340	20/2	56B4	6,60
432 012 05	0,12	7,9	146	1,1	177,09	3000	600	40/3	63A4	10,10
432 012 10	0,12	10,3	112	1,4	135,69	3000	600	40/3	63A4	10,10
432 012 15	0,12	13,6	85	2,1	102,89	3000	600	40/3	63A4	10,10
432 012 20	0,12	16,2	72	1,9	86,66	3000	600	40/3	63A4	10,10
432 012 25	0,12	19,1	61	2,9	73,43	3000	600	40/3	63A4	10,10
432 012 30	0,12	22,6	53	1,3	61,89	1900	3800	20/2	63A4	7,50
432 012 35	0,12	28,1	42	1,7	49,76	1900	3800	20/2	63A4	7,50
432 012 40	0,12	37,1	32	2,2	37,69	1900	3800	20/2	63A4	7,50
432 012 45	0,12	48,5	25	2,8	28,88	1900	3800	20/2	63A4	7,50
432 012 50	0,12	53	22	2,7	26,31	1900	3800	20/2	63A4	7,50

[1] Radial load F_R max. (on middle of the Output Shaft) for $F_A = 0$.
[2] Axial load F_A max. for $F_R = 0$.

Dimensions table page 718.

Helical Geared Motors HR/I

Product No. Model B3	P kW	n_2 min^{-1}	M_a Nm	f_B	$i_{ges.}$	F_R [1] N	F_A [2] N	Gearbox Size	Motor Size	Weight kg
432 018 05	0,18	10,3	155	1,0	135,69	3000	600	40/3	63B4	10,50
432 018 10	0,18	13,6	117	1,5	102,89	3000	600	40/3	63B4	10,50
432 018 15	0,18	16,2	99	1,4	86,88	3000	600	40/3	63B4	10,50
432 018 20	0,18	19,7	81	2,0	70,95	3000	600	40/3	63B4	10,50
432 018 25	0,18	22,9	70	2,3	61,22	3000	600	40/3	63B4	10,50
432 018 30	0,18	27,6	58	2,8	50,64	3000	600	40/3	63B4	10,50
432 018 35	0,18	32	50	3,0	43,69	3000	600	40/3	63B4	10,50
432 018 40	0,18	39	42	1,7	35,91	1900	380	20/2	63B4	7,90
432 018 45	0,18	48,5	34	2,1	28,88	1900	380	20/2	63B4	7,90
432 018 50	0,18	64	26	2,3	21,84	1900	380	20/2	63B4	7,90
432 018 55	0,18	75	22	2,7	18,78	1700	340	20/2	63B4	7,90
432 018 60	0,18	86	19	3,1	16,2	1500	300	20/2	63B4	7,90
432 018 65	0,18	93	18	3,4	15,1	1500	270	20/2	63B4	7,90
432 018 70	0,18	123	13	4,5	11,42	1350	246	20/2	63B4	7,90
432 025 05	0,25	5,8	384	0,9	241,82	5000	1000	50/3	71A4	18,00
432 025 10	0,25	7,8	286	1,2	180,4	5000	1000	50/3	71A4	18,00
432 025 15	0,25	10,2	217	1,6	136,62	5000	1000	50/3	71A4	18,00
432 025 20	0,25	15,1	147	2,2	92,78	5000	1000	50/3	71A4	18,00
432 025 25	0,25	19,7	113	1,4	70,95	3000	600	40/3	71A4	12,20
432 025 30	0,25	22,9	97	1,6	61,22	3000	600	40/3	71A4	12,20
432 025 35	0,25	27,6	80	2,0	50,64	3000	600	40/3	71A4	12,20
432 025 40	0,25	32	69	2,2	43,69	3000	600	40/3	71A4	12,20
432 025 45	0,25	37,1	62	1,1	37,69	1900	380	20/2	71A4	9,60
432 025 50	0,25	48,5	47	1,5	28,88	1900	380	20/2	71A4	9,60
432 025 55	0,25	64	36	1,7	21,84	1900	380	20/2	71A4	9,60
432 025 60	0,25	75	31	2,0	18,78	1700	340	20/2	71A4	9,60
432 025 65	0,25	107	21	2,8	13,03	1500	300	20/2	71A4	9,60
432 025 70	0,25	123	19	3,2	11,42	1350	270	20/2	71A4	9,60
432 025 75	0,25	142	16	3,7	9,85	1320	246	20/2	71A4	9,60
432 025 80	0,25	194	12	4,2	7,2	1320	185	20/2	71A4	9,60
432 025 85	0,25	257	9	5,6	5,45	756	151	20/2	71A4	9,60
432 037 05	0,37	7,8	423	0,8	180,4	5000	1000	50/3	71B4	18,60
432 037 10	0,37	15,1	218	1,5	92,78	5000	1000	50/3	71B4	18,60
432 037 15	0,37	18,3	180	2,0	76,69	5000	1000	50/3	71B4	18,60
432 037 20	0,37	21,1	155	2,1	66,22	5000	1000	50/3	71B4	18,60
432 037 25	0,37	25,6	128	2,8	54,73	5000	1000	50/3	71B4	18,60
432 037 30	0,37	29,9	114	1,2	46,86	3000	600	40/2	71B4	12,40
432 037 35	0,37	36,5	90	1,9	38,4	3000	600	40/3	71B4	12,80
432 037 40	0,37	39	87	1,2	35,91	1900	380	30/2	71B4	10,50
432 037 45	0,37	48,5	70	1,0	28,88	1900	380	20/2	71B4	10,20
432 037 50	0,37	64	53	1,1	21,84	1900	380	20/2	71B4	10,20
432 037 55	0,37	75	46	1,3	18,78	1700	340	20/2	71B4	10,20
432 037 60	0,37	86	39	1,5	16,2	1500	300	20/2	71B4	10,20
432 037 65	0,37	107	32	1,9	13,03	1500	300	20/2	71B4	10,20
432 037 70	0,37	123	28	2,2	11, 42	1350	270	20/2	71B4	10,20
432 037 75	0,37	142	24	2,5	9,85	1320	246	20/2	71B4	10,20
432 037 80	0,37	181	19	2,7	7,74	1320	246	20/2	71B4	10,20
432 055 05	0,55	8,5	577	0,9	165,29	6500	1300	60/3	80A4	23,20
432 055 10	0,55	11,1	442	1,1	126,65	6500	1300	60/3	80A4	23,20
432 055 15	0,55	13,4	365	1,4	104,68	6500	1300	60/3	80A4	23,20
432 055 20	0,55	15,1	324	1,0	92,78	5000	1000	50/3	80A4	20,60
432 055 25	0,55	18,3	268	1,3	76,69	5000	1000	50/3	80A4	20,60
432 055 30	0,55	21,1	231	1,4	66,22	5000	1000	50/3	80A4	20,60
432 055 35	0,55	25,6	191	1,9	54,73	5000	1000	50/3	80A4	20,60
432 055 40	0,55	29,6	165	2,1	47,22	5000	1000	50/3	80A4	20,60
432 055 45	0,55	34,6	146	2,0	40,5	5000	1000	50/2	80A4	20,40
432 055 50	0,55	39	129	1,1	35,91	3000	600	40/2	80A4	14,40
432 055 55	0,55	47,6	106	1,5	29,4	3000	600	40/2	80A4	14,40
432 055 60	0,55	63	80	2,1	22,29	3000	600	40/2	80A4	14,40
432 055 65	0,55	74	68	2,0	18,8	2700	540	40/2	80A4	14,40
432 055 70	0,55	86	58	2,4	16,2	2400	480	40/2	80A4	14,40
432 055 75	0,55	91	55	2,9	15,37	2400	480	40/2	80A4	14,40
432 055 80	0,55	107	47	2,4	13,03	1500	300	30/2	80A4	12,50
432 055 85	0,55	123	41	2,8	11,42	1350	270	30/2	80A4	12,50
432 055 90	0,55	142	35	2,7	9,85	1320	246	30/2	80A4	12,50
432 055 95	0,55	181	28	2,9	7,74	1320	246	30/2	80A4	12,50
432 055 96	0,55	257	20	2,5	5,45	756	151	30/2	80A4	12,50

[1] Radial load F_R max at $F_A = 0$.
[2] Axial load F_A max at $F_R = 0$.
Dimensions table page 718.

Helical Geared Motors HR/I

Product No. Model B3	P kW	n_2 min^{-1}	M_a Nm	f_B	$i_{ges.}$	F_R [1] N	F_A [2] N	Gearbox Size	Motor Size	Weight kg
432 075 05	0,75	11,4	600	0,9	126,65	6500	1300	60/3	80B4	26,0
432 075 10	0,75	13,8	496	1,0	104,68	6500	1300	60/3	80B4	26,0
432 075 15	0,75	17,2	396	1,1	83,59	6500	1300	60/3	80B4	26,0
432 075 20	0,75	21,7	314	1,0	66,22	5000	1000	50/3	80B4	23,4
432 075 25	0,75	26,3	259	1,3	54,73	5000	1000	50/3	80B4	23,4
432 075 30	0,75	30,5	224	1,6	47,22	5000	1000	50/3	80B4	23,4
432 075 32	0,75	35,6	196	1,5	40,5	5000	1000	50/2	80B4	23,2
432 075 35	0,75	40,5	172	1,9	35,58	5000	1000	50/2	80B4	23,2
432 075 37	0,75	49,0	142	2,5	29,41	4500	900	50/2	80B4	23,2
432 075 40	0,75	58	121	2,0	24,98	4500	900	50/2	80B4	23,2
432 075 42	0,75	65	108	1,5	22,29	3000	600	40/2	80B4	17,2
432 075 45	0,75	77	91	1,5	18,8	2700	540	40/2	80B4	17,2
432 075 47	0,75	89	78	1,7	16,2	2400	480	40/2	80B4	17,2
432 075 50	0,75	109	64	2,5	13,26	2400	480	40/2	80B4	17,2
432 075 52	0,75	123	56	3,0	11,66	2240	448	40/2	80B4	17,2
432 075 55	0,75	143	49	3,0	10,06	2240	448	40/2	80B4	17,2
432 075 57	0,75	174	40	1,0	5,45	1320	246	30/2	90S6	15,3
432 075 60	0,75	200	35	2,0	7,2	1320	246	30/2	80B4	15,3
432 075 65	0,75	231	30	2,3	6,23	924	185	30/2	80B4	15,3
432 075 70	0,75	264	26	1,9	5,45	776	151	30/2	80B4	15,3
432 075 75	0,75	336	21	1,9	4,28	700	140	30/2	80B4	15,3
432 075 80	0,75	419	17	2,1	3,44	700	140	30/2	80B4	15,3
432 110 05	1,1	18,8	529	1,0	76,69	6500	1300	60/3	90S4	29,7
432 110 10	1,1	21,7	457	1,1	66,22	6500	1300	60/3	90S4	29,7
432 110 15	1,1	26,3	378	1,3	54,73	6500	1300	60/3	90S4	29,7
432 110 20	1,1	30,5	326	1,6	47,22	6500	1300	60/3	90S4	29,7
432 110 25	1,1	36,2	275	1,6	39,79	6500	1300	60/3	90S4	29,7
432 110 30	1,1	40,5	251	1,3	35,58	5000	1000	50/2	90S4	26,9
432 110 35	1,1	49,0	207	1,7	29,41	4500	900	50/2	90S4	26,9
432 110 40	1,1	58	176	1,4	24,98	4500	900	50/2	90S4	26,9
432 110 45	1,1	67	152	1,0	21,54	3000	600	40/2	90S4	20,9
432 110 50	1,1	80	127	1,2	18,04	2700	540	40/2	90S4	20,9
432 110 55	1,1	94	108	1,5	15,37	2400	480	40/2	90S4	20,9
432 110 57	1,1	109	93	1,7	13,26	2400	480	40/2	90S4	20,9
432 110 60	1,1	123	82	2,1	11,66	2240	448	40/2	90S4	20,9
432 110 62	1,1	143	71	2,1	10,06	2240	448	40/2	90S4	20,9
432 110 65	1,1	186	55	1,4	7,74	1320	246	30/2	90S4	19,0
432 110 67	1,1	200	51	1,4	7,2	1320	246	30/2	90S4	19,0
432 110 70	1,1	231	44	1,6	6,23	924	185	30/2	90S4	19,0
432 110 75	1,1	264	38	1,3	5,45	756	151	30/2	90S4	19,0
432 110 80	1,1	336	30	1,3	4,28	700	140	30/2	90S4	19,0
432 110 85	1,1	419	24	1,4	3,44	700	140	30/2	90S4	19,0
432 150 05	1,5	26,1	519	1,0	54,73	6500	1300	60/3	90LA4	32,7
432 150 10	1,5	30,3	448	1,1	47,22	6500	1300	60/3	90LA4	32,7
432 150 15	1,5	35,9	377	1,1	39,79	6500	1300	60/3	90LA4	32,7
432 150 20	1,5	40,2	345	0,9	35,58	5000	1000	50/2	90LA4	29,9
432 150 25	1,5	48,6	285	1,2	29,41	4500	900	50/2	90LA4	29,9
432 150 30	1,5	57	242	1,0	24,98	4500	900	50/2	90LA4	29,9
432 150 35	1,5	71	195	1,7	20,1	3900	780	50/2	90LA4	29,9
432 150 40	1,5	86	161	2,2	16,62	3900	780	50/2	90LA4	29,9
432 150 45	1,5	101	138	1,8	14,21	3500	700	50/2	90LA4	29,9
432 150 50	1,5	123	113	1,5	11,66	2240	448	40/2	90LA4	23,9
432 150 55	1,5	142	97	1,5	10,06	2240	448	40/2	90LA4	23,9
432 150 60	1,5	181	76	1,6	7,89	2030	406	40/2	90LA4	23,9
432 150 65	1,5	195	71	1,7	7,33	2030	406	40/2	90LA4	23,9
432 150 70	1,5	225	62	1,5	6,36	1800	360	40/2	90LA4	23,9
432 150 75	1,5	262	53	1,0	5,45	756	151	30/2	90LA4	22,0
432 150 80	1,5	334	41	1,0	4,28	700	140	30/2	90LA4	22,0
432 150 85	1,5	416	33	1,0	3,44	700	140	30/2	90LA4	22,0

[1] Radial load F_R max at $F_A = 0$.
[2] Axial load F_A max at $F_R = 0$.
Dimensions table page 718.

Note for Dimensioning

Three-phase motors have a very high starting torque. The max. permissible, stability related torque of the gearbox is the product of output torque and operating factor: $M_{max.} = M_a \times f_B$

This torque must never be exceeded.

Furthermore, depending on kind of operation,

factors for shock load and acceleration must be considered.

Optionally also available with additional manual adjustment mechanism (on request).

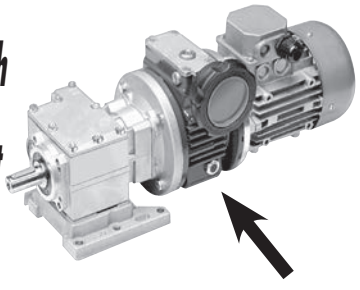

Output Flanges for Helical Geared Motors HR/I

Material: Aluminium.

Output-side flange for helical geared motor HR/I to be mounted by the customer, for modification from foot mounting B3 to flange mounting B5.

For every gearbox size there are flanges in several, common diameters available.

The flange is supplied with the required mounting screws and can be easily screwed on. The screwed on foot mounting can be taken off the gearbox, if required.



Ordering details: e.g.: Prod. No. 432 020 12, Output Flange for Gearbox Size 20/2 and 30/2

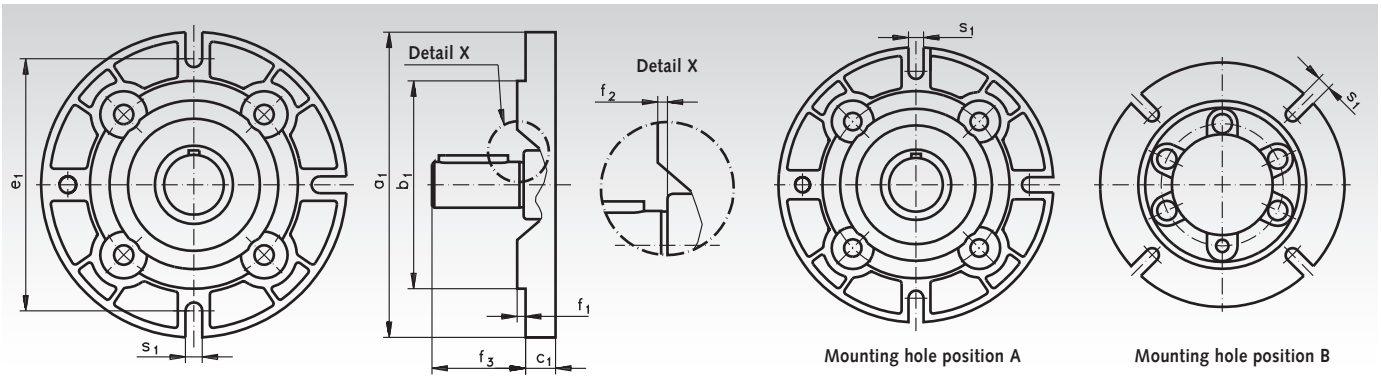

Output Flange Gearbox Size 20/2 and 30/2

Product No.	a_1 mm	b_1 mm	c_1 mm	e_1 mm	f_1 mm	f_2 mm	f_3 mm	s_1 mm	Mount. Hole Position	Weight kg
432 020 12	120	80	11,5	100	3,0	6,5	36,5	9	A	0,23
432 020 14	140	95	11,5	115	3,0	6,5	36,5	9	B	0,32
432 020 16	160	110	11,5	130	3,5	7,0	36,5	9	B	0,41
432 020 20	200	130	11,5	165	3,5	7,0	36,5	11	B	0,61

Output Flange Gearbox Size 40/2 and 40/3

Product No.	a_1 mm	b_1 mm	c_1 mm	e_1 mm	f_1 mm	f_2 mm	f_3 mm	s_1 mm	Mount. Hole Position	Weight kg
432 040 12	120	80	10	100	3,0	6,0	47	9	B	0,24
432 040 14	140	95	10	115	3,0	6,0	47	9	B	0,32
432 040 16	160	110	10	130	3,0	6,0	47	9	B	0,42
432 040 20	200	130	11	165	3,5	6,5	47	11	B	0,67

Output Flange Gearbox Size 50/2, 50/3 und 60/3

Product No.	a_1 mm	b_1 mm	c_1 mm	e_1 mm	f_1 mm	f_2 mm	f_3 Size 50 mm	f_3 Size 60 mm	s_1 mm	Mount. Hole Position	Weight kg
432 050 16	160	110	14,0	130	3,5	6,0	57,5	67,5	9	B	0,52
432 050 20	200	130	13,0	165	3,5	6,0	57,5	67,5	11	B	0,71
432 050 25	250	180	15,5	215	4,0	6,5	57,5	67,5	14	B	1,24

Lubricant Volume in Litre (dm^3)

The gearbox is lubricated for life, using synthetic oil. At normal operating conditions, no change is required. The lubricant volume is the same for all mounting positions.

Size	20/2	30/2	40/2	40/3	50/2	50/3	60/3
Oil volume	0.15	0.15	0.40	0.45	1.10	1.15	1.25

Dimensions Table Helical Geared Motors HR/I

Gearbox Size
20/2
30/2

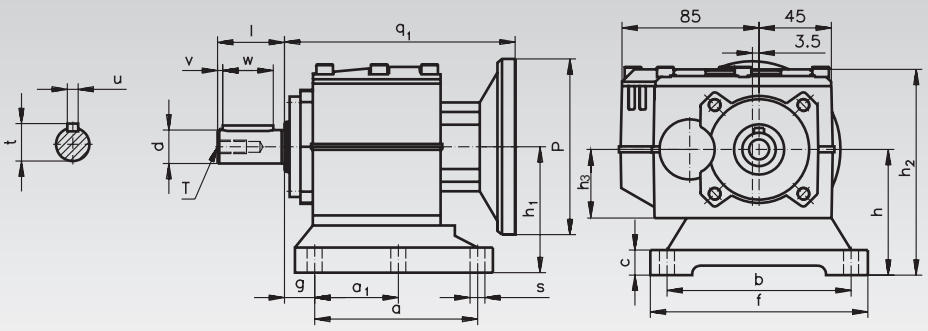

Gearbox Size
40/2
40/3
50/2
50/3
60/3

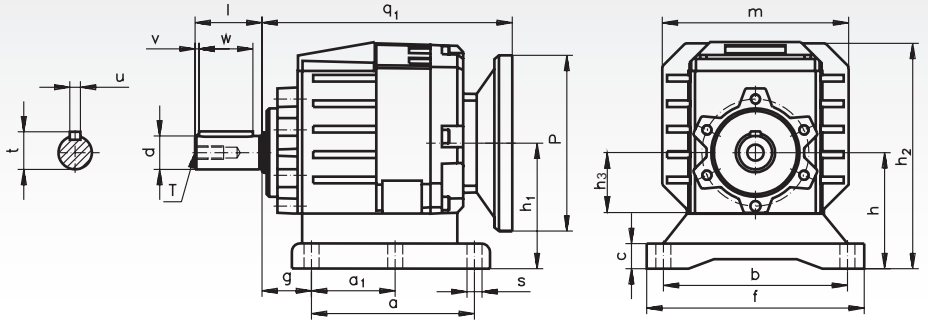

Gear Size	Motor Size	Output Shaft d mm	l mm	t mm	T mm	u mm	v mm	w mm	Gearbox Housing and Foot a mm	a_1 mm	b mm	c mm	f mm	g mm	h mm	h_1 mm	h_2 mm	h_3 mm	m mm	P m	q_1 mm	s mm
20/2	**56**	16	40	18,0	M6	5	3	30	110	50	110	15	130	18	75	75,0	115,5	41	-	78	137,5	9,0
20/2	**63**	16	40	18,0	M6	5	3	30	110	50	110	15	130	18	75	75,0	115,5	41	-	90	133,5	9,0
20/2	**71**	16	40	18,0	M6	5	3	30	110	50	110	15	130	18	75	75,0	115,5	41	-	105	133,0	9,0
30/2	**71**	20	40	22,5	M8	6	3	30	110	50	110	15	130	18	75	75,0	115,5	41	-	105	149,5	9,0
30/2	**80**	20	40	22,5	M8	6	3	30	110	50	110	15	130	18	75	75,0	115,5	41	-	120	150,5	9,0
30/2	**90**	20	40	22,5	M8	6	3	30	110	50	110	15	130	18	75	75,0	115,5	41	-	140	151,5	9,0
40/2	**71**	25	50	28,0	M8	8	3	40	90	50	110	15	145	18	75	82,0	155,0	45,5	139	105	178,5	9,0
40/2	**80**	25	50	28,0	M8	8	3	40	90	50	110	15	145	18	75	82,0	155,0	45,5	139	120	179,5	9,0
40/2	**90**	25	50	28,0	M8	8	3	40	90	50	110	15	145	18	75	82,0	155,0	45,5	139	140	180,5	9,0
40/3	**56**	25	50	28,0	M8	8	3	40	90	50	110	15	145	18	75	78,2	155,0	45,5	139	78	186,5	9,0
40/3	**63**	25	50	28,0	M8	8	3	40	90	50	110	15	145	18	75	78,2	155,0	45,5	139	90	181,5	9,0
40/3	**71**	25	50	28,0	M8	8	3	40	90	50	110	15	145	18	75	78,2	155,0	45,5	139	105	182,0	9,0
50/2	**80**	30	60	33,0	M10	8	5	50	165	-	135	24	170	30	115	120,3	216,5	69,5	178	120	226,0	13,5
50/2	**90**	30	60	33,0	M10	8	5	50	165	-	135	24	170	30	115	120,3	216,5	69,5	178	140	226,0	13,5
50/3	**71**	30	60	33,0	M10	8	5	50	165	-	135	24	170	30	115	130,0	216,5	69,5	178	105	234,5	13,5
50/3	**80**	30	60	33,0	M10	8	5	50	165	-	135	24	170	30	115	130,0	216,5	69,5	178	120	235,5	13,5
60/3	**80**	35	70	38,0	M10	10	5	60	165	-	135	24	170	30	115	130,5	218,0	69,5	202	120	254,0	13,5
60/3	**90**	35	70	38,0	M10	10	5	60	165	-	135	24	170	30	115	130,5	218,0	69,5	202	140	255,0	13,5

Motor
(Model B14)

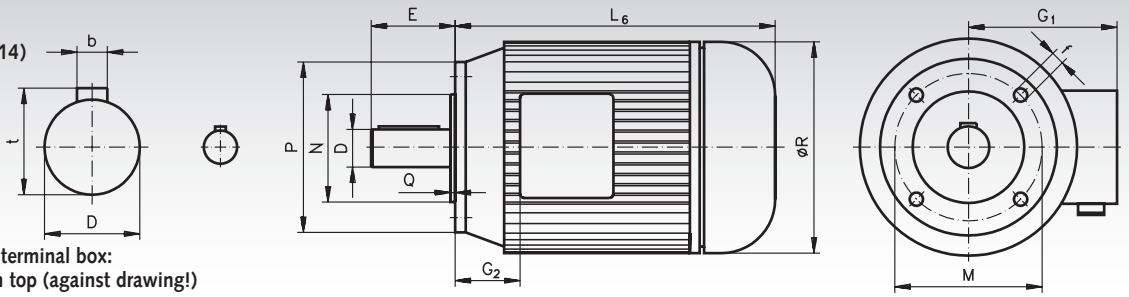

Position of terminal box:
standard on top (against drawing!)

Motor Size	D mm	b mm	t mm	E mm	f mm	G_1 mm	G_2 mm	L_6 mm	M mm	N mm	P mm	Q mm	R mm	Weight kg
56B	9	3	10,2	20	M5	112	13	179	65	50	80	2,5	108	2,9
63A	11	4	12,5	23	M5	113	19	185	75	60	90	2,5	120	3,8
63B	11	4	12,5	23	M5	113	19	185	75	60	90	2,5	120	4,2
71A	14	5	16	30	M6	125	24	206	85	70	105	2,5	130	5,9
71B	14	5	16	30	M6	125	24	225	85	70	105	2,5	141	6,5
80A	19	6	21,5	40	M6	133	23	256	100	80	120	3	159	8,5
80B	19	6	21,5	40	M6	133	23	256	100	80	120	3	159	10,8
90S	24	8	27	50	M8	148	28	255	115	95	140	3	170	13,0
90L	24	8	27	50	M8	148	28	280	115	95	140	3	170	15,4

Housing: One-part, torsion-resistant block-shaped housing made from grey cast iron type GG20 or GGG40. The high torsional stiffness helps to achieve an optimum production accuracy, leading to low noise and thus a longer service life.

Gearing: The helical gearwheels are produced from forged blanks, the gears are case hardened and ground or scraped. The calculations were carried out according to DIN 3990.

Bearing system: Generously dimensioned roller bearings.

Shafts: Ø according to ISO k6. Feather key groove according to DIN 6885/1. Centering points with threads according to DIN 332/2, see page 820.

Lubrication: The gear boxes are delivered filled with the correct level of oil or grease, which offers sufficient lubrication for about 10.000 operating hours, or for an operation period of 2 years, at a temperature of -5°C to +40°C. When changing the lubricant, always clean the gearbox thoroughly.

Motor: 230/400 V, 50 Hz, according to DIN 40050-VDE 0530, IP 55, insulation class „B" VDE 0530, temperature limit +80°C at max. ambient temperature of 40°C.

From 0.75 kW in efficiency class IE3.

Gearbox with higher power, other speeds, fitted brake motors, explosion-proof or dual-speed motors and other models on request.



Note

The oil volume and venting position depends on the model and the mounting position. Please read the operating and maintenance instructions carefully.

Ordering details: e.g.: Type, Motor Power, Output Speed, Model, Product No.

Product No. Model B3	P kW	n_2 min^{-1}	M_a Nm	f_B	$i_{tot.}$	Standard Bearing F_R [1] N	Standard Bearing F_A [2] N	Dimen.-Table	Weight kg
431 002 01	0,12	3,2	209*	0,8	420,83	2980	4000	1	19
431 002 04	0,12	4,9	220*	0,8	275,12	2890	4000	1	19
431 002 06	0,12	6,8	169	1,2	195,78	3240	4000	1	19
431 002 07	0,12	8,4	136	1,2	159,36	3400	4000	1	19
431 002 08	0,12	10	115	1,3	132,45	3490	4000	1	19
431 003 04	0,12	18	64	1,4	73,06	2270	3270	2	12
431 003 06	0,12	25	46	1,9	53,68	2340	3270	2	12
431 003 08	0,12	40	29	3,4	33,42	2390	3270	2	12
431 003 10	0,12	58	20	3,9	23,13	2400	3270	2	12
431 003 12	0,12	84	14	5,3	15,95	2410	3270	2	12
431 003 13	0,12	104	11	6,4	12,82	2410	3270	2	12
431 003 16	0,12	144	8	8,2	9,28	2390	3270	2	12
431 003 19	0,12	194	6	10,3	6,89	2170	3270	2	12
431 003 21	0,12	277	4	13,8	4,82	1930	3240	2	12
431 003 23	0,12	395	3	16,5	3,38	1720	2780	2	12
431 010 01	0,18	2,5	668	1,0	524,08	5700	9000	3	43
431 010 02	0,18	3,1	555	1,2	421,32	6110	9000	3	43
431 010 03	0,18	3,9	441	1,5	339,15	6380	9000	3	43
431 011 01	0,18	5,1	337	1,0	262,24	4520	5600	4	31
431 011 02	0,18	6,2	282	1,2	217,73	4820	5600	4	31
431 011 04	0,18	8,7	198	1,5	151,44	5150	5600	4	31
431 014 01	0,18	18	96	0,9	73,06	2080	3270	2	12
431 014 03	0,18	25	69	1,3	53,68	2250	3270	2	12
431 014 05	0,18	40	43	2,2	33,42	2350	3270	2	12
431 014 07	0,18	57	30	2,6	23,13	2380	3270	2	12
431 014 09	0,18	83	21	3,5	15,95	2400	3270	2	12
431 014 10	0,18	103	17	4,2	12,82	2400	3270	2	12
431 014 13	0,18	143	12	5,4	9,28	2370	3270	2	12
431 014 16	0,18	192	9	6,8	6,89	2160	3270	2	12
431 014 18	0,18	275	6	9,1	4,82	1920	3190	2	12
431 014 20	0,18	329	4	10,9	3,38	1710	2760	2	12
431 024 01	0,25	19	126	1,1	72,63	3440	4000	5	15
431 024 02	0,25	22	109	1,4	61,35	3510	4000	5	15
431 025 01	0,25	26	92	1,0	53,68	2110	3270	6	13
431 025 03	0,25	41	58	1,6	33,42	2300	3270	6	13
431 025 05	0,25	60	40	2,0	23,13	2360	3270	6	13
431 025 07	0,25	87	27	2,6	15,95	2390	3270	6	13
431 025 08	0,25	108	22	3,2	12,82	2400	3270	6	13
431 025 11	0,25	149	16	4,1	9,28	2310	3270	6	13
431 025 14	0,25	200	12	5,1	6,89	2110	3270	6	13
431 025 16	0,25	286	8	6,8	4,82	1830	3140	6	13
431 025 18	0,25	408	6	8,2	3,38	1680	2720	6	13

* Max. output torque: at f_B = 0.8. Dimensions table page 721.

Helical Geared Motors NR/I

Product No. Model B3	P kW	n_2 min^{-1}	M_a Nm	f_B	i tot.	Standard Mounting F_R [1] N	F_A [2] N	Dimens. Table	Weight kg
431 034 02	0,37	11	321	1,1	124,17	4610	5600	7	33
431 036 01	0,37	16	221	1,1	86,30	5070	5600	8	25
431 036 02	0,37	19	186	1,4	69,81	5190	5600	8	25
431 036 03	0,37	25	141	2,3	55,28	5300	5600	8	25
431 038 01	0,37	33	107	0,9	41,58	1990	3270	6	14
431 038 02	0,37	41	86	1,1	33,42	2150	3270	6	14
431 038 06	0,37	59	60	1,3	23,13	2290	3270	6	14
431 038 08	0,37	85	42	1,7	15,95	2350	3270	6	14
431 038 09	0,37	106	33	2,1	12,82	2380	3270	6	14
431 038 12	0,37	147	24	2,7	9,28	2270	3270	6	14
431 038 15	0,37	197	18	3,4	6,89	2080	3270	6	14
431 038 17	0,37	282	13	4,5	4,82	1850	3270	6	14
431 044 01	0,55	14	375	0,9	100,60	4270	5600	9	35
431 044 02	0,55	16	328	1,0	88,45	4570	5600	9	35
431 046 01	0,55	20	263	1,0	69,81	4910	5600	10	27
431 046 02	0,55	25	210	1,5	55,28	5110	5600	10	27
431 047 01	0,55	29	181	1,0	47,87	2480	4000	11	18
431 047 02	0,55	36	146	1,3	38,31	3030	4000	11	18
431 047 03	0,55	44	119	1,4	31,19	3370	4000	11	18
431 047 04	0,55	53	99	1,4	25,92	3210	4000	11	18
431 048 02	0,55	57	92	1,0	24,39	1910	3270	12	16
431 048 03	0,55	67	78	0,9	20,59	2200	3270	12	16
431 048 04	0,55	86	61	1,2	15,95	2290	3270	12	16
431 048 05	0,55	107	49	1,4	12,82	2330	3270	12	16
431 048 06	0,55	122	43	1,6	11,27	2310	3270	12	16
431 048 07	0,55	138	38	1,7	9,95	2240	3270	12	16
431 048 08	0,55	148	35	1,8	9,28	2190	3270	12	16
431 048 11	0,55	200	26	2,3	6,89	2010	3270	12	16
431 058 01	0,75	37	194	0,9	38,31	600	4000	11	21
431 058 02	0,75	45	158	1,0	31,19	1350	4000	11	21
431 058 03	0,75	55	131	1,0	25,92	1890	4000	11	21
431 058 04	0,75	66	108	1,6	21,28	2960	4000	11	21
431 058 05	0,75	75	95	1,7	18,79	2890	4000	11	21
431 058 06	0,75	85	85	1,8	16,73	2830	4000	11	21
431 059 02	0,75	110	65	1,1	12,82	2260	3270	12	18
431 059 04	0,75	142	50	1,3	9,95	2150	3270	12	18
431 059 06	0,75	173	42	1,5	8,19	2040	3270	12	18
431 059 08	0,75	205	35	1,7	6,89	1950	3270	12	18
431 059 10	0,75	294	24	2,3	4,82	1760	3090	12	18
431 059 12	0,75	419	17	3,0	3,38	1590	2730	12	18
431 069 01	1,10	31	337	0,9	45,90	1250	5600	13	35
431 069 03	1,10	40	261	1,3	35,55	3170	5600	13	34
431 069 04	1,10	49	215	1,4	29,31	3920	5600	13	34
431 069 05	1,10	58	182	1,4	24,73	4300	5600	13	34
431 069 06	1,10	72	146	1,9	19,87	4120	5600	13	34
431 070 03	1,10	85	123	1,3	16,73	1920	4000	14	26
431 070 04	1,10	107	98	1,5	13,39	2270	4000	14	26
431 070 06	1,10	148	71	1,9	9,65	2300	4000	14	26
431 070 08	1,10	219	48	2,6	6,53	2080	3650	14	26
431 070 10	1,10	290	36	3,2	4,93	1940	3360	14	26
431 070 12	1,10	359	29	3,9	3,98	1810	3080	14	26
431 080 01	1,50	40	360	0,9	35,55	343	381	13	35
431 080 02	1,50	49	292	1,3	28,80	1000	5600	13	35
431 080 03	1,50	60	240	1,4	23,74	2000	5600	13	35
431 080 04	1,50	71	203	1,4	20,03	2600	5600	13	35
431 081 01	1,50	85	169	0,9	16,73	239	272	14	28
431 081 02	1,50	106	136	1,1	13,39	600	3920	14	28
431 081 04	1,50	147	98	1,4	9,65	1650	3760	14	28
431 081 06	1,50	217	66	1,9	6,53	1980	3380	14	28
431 081 08	1,50	287	50	2,3	4,93	1870	2140	14	28
431 081 10	1,50	356	40	2,8	3,98	1750	2920	14	28
431 081 11	1,50	417	34	3,2	3,39	1690	2780	14	28

[1] Radial load F_R max at $F_A = 0$.
[2] Axial load F_A max at $F_R = 0$.
Dimensions table page 721.

Note for Dimensioning

Three-phase motors have a very high starting torque. The max. permissible, stability related torque of the gearbox is the product of output torque and operating factor: $M_{max.} = M_a \times f_B$

This torque must never be exceeded.

Furthermore, depending on kind of operation,

factors for shock load and acceleration must be considered.

Two-Stage, Dimensions Table 2, 5, 6, 8, 10, 11, 12, 13, 14

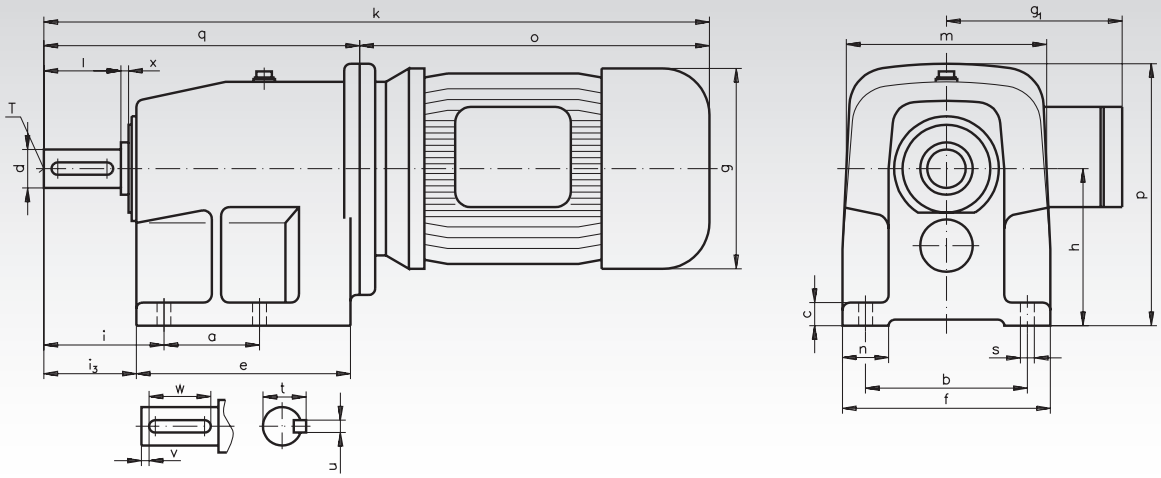

Three-Stage, Dimensions Table 1, 3, 4, 7, 9

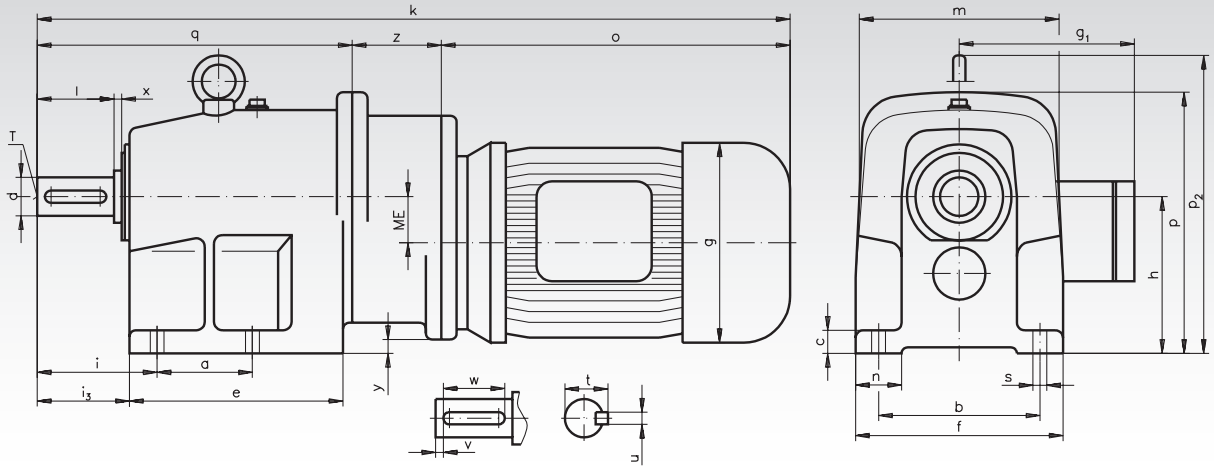

Dim. Table	Mounting Dimensions (Foot) a mm	b mm	c mm	e mm	f mm	n mm	s mm	Dimensions and Connecting Dimensions g mm	g_1 mm	h mm	i mm	i_3 mm	k mm	m mm	o mm	p mm	p_2 mm	q mm	y mm	z mm	ME mm	Shaft Dimensions d mm	l mm	t mm	u mm	v mm	w mm	x mm	T mm
1	62	105	15	139	135	30	9	130	115	102	78	60	490	130	227	170	-	205	9	58	30,0	25	50	28	8	6	40	4	M10
2	60	110	12	134	130	25	9	130	115	86	52	43	409	130	227	153	-	182	-	-	-	20	40	22,5	6	5	32	4	M6
3	120	185	20	214	210	40	13	130	115	155	96	79	586	200	227	257	292	299	37	60	50,0	40	80	43	12	5	70	6	M16
4	80	160	18	175	185	30	11	130	115	125	74	59	526	200	227	225	-	239	7	60	42,5	30	60	33	8	7	50	5	M10
5	62	105	15	139	135	30	9	145	124	102	78	60	453	130	248	175	-	205	-	-	-	25	50	28	8	6	40	4	M10
6	60	110	12	134	130	25	9	145	124	86	52	43	430	130	248	159	-	182	-	-	-	20	40	22,5	6	5	32	4	M6
7	80	160	18	175	185	30	11	145	124	125	74	59	547	200	248	225	-	239	7	60	42,5	30	60	33	8	7	50	5	M10
8	80	160	18	175	185	30	11	145	124	125	74	59	481	200	242	225	-	239	-	-	-	30	60	33	8	7	50	5	M10
9	80	160	18	175	185	30	11	165	142	125	74	59	571	200	272	225	-	239	7	60	42,5	30	60	33	8	7	50	5	M10
10	80	160	18	175	185	30	11	165	142	125	74	59	505	200	266	225	-	239	-	-	-	30	60	33	8	7	50	5	M10
11	62	105	15	139	135	30	9	165	142	102	78	60	477	130	272	183	-	205	-	-	-	25	50	28	8	6	40	4	M10
12	60	110	12	134	130	25	9	165	142	86	52	43	454	130	272	167	-	182	-	-	-	20	40	22,5	6	5	32	4	M6
13	80	160	18	175	185	30	11	182	147	125	74	59	543	200	304	225	-	239	-	-	-	30	60	33	8	7	50	5	M10
14	62	105	15	139	135	30	9	182	147	102	78	60	515	130	310	195	-	205	-	-	-	25	50	28	8	6	40	5	M10

Note

Standard model is B3 (= catalogue product number). Other models on request. The model/mounting position must always be stated, as different models/mounting positions require different oil volumes and venting positions.

Worm Geared Motors

The worm geared motors on page 723 to 733 are delivered with the standard voltage 400V for a mains frequency of 50Hz. With help of the enclosed operating capacitor they can however be connected to 230V, 50Hz one-phase mains using the Steinmetz circuit. Please note that with this circuit, the power drops by 30 - 50% below the stated value.

The smaller gearboxes form a completely oil-proof and dust protected unit with the driving motors. The larger gearboxes are designed with ventilation. Before the start of operational use the sealing screw must be exchanged with the supplied venting screw.

All listed worm geared motors have the protection class IP 54 and can be supplied with an electromagnetically controlled disk brake (except for the 45 W motor on page 723). This makes the worm geared motor about 40mm longer.

The steel worms used are hardened and ground, while the worm gears are made from high-quality special brass with perfect gliding properties. In most applications, there is no relubrication or change of lubricant required. These worm geared motors are therefore suitable for low-maintenance applications.

Gearbox and shaft position according to the respective dimensional drawing. Required ordering specifications: Type, voltage/frequency with or without operating capacitor, motor data, transmission ratio/output speed, product no.

Steinmetz Circuit

The three-phase motor can be connected to one-phase mains with the circuit pictured on the right using a capacitor! On the following pages the required capacitors are matched with their respective worm geared motors.

To change the sense of rotation the phase L1 has to be disconnected from the terminal U1 and connected to the terminal W1.

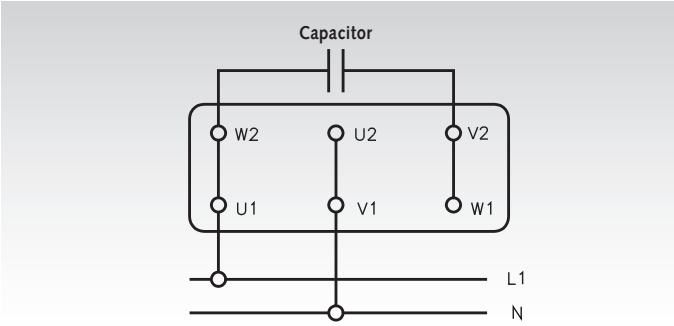

Safety Note

Only qualified personnel should be authorized to work on the worm geared motors always regarding the safety regulations.

Before starting the assembly please read the enclosed operating and maintenance instructions.

Operating Capacitors KST

Aluminium housing, metal-polypropylene. For 30,000 operating hours. According to VDE to 25µF. The capacitors have a protective cap made from aluminium and a 180mm cable connected on the side. On the bottom there is a mounting screw with toothed lock washer and nut.

Technical Data:
Capacity tolerance ±10%.
Frequency 50 to 60 Hz.
Voltage 400 V.
Loss < 0.3%.

Temperature range -25 to +85°C.
Insulation test voltage (2 Sec.) 2.5 kV (to ground).



Product No.	Capacity µF	Ø x Length mm	Weight kg
436 352 00	2,0	26 x 87	0,71
436 356 00	5,0	36 x 105	1,39
436 359 00	10,0	36 x 102	1,18
436 361 00	16,0	45 x 110	1,50
436 362 00	20,0	45 x 123	1,80
436 363 00	25,0	50 x 118	2,00

Worm Geared Motors MEK with One-Stage Worm Gear Unit

230/400V, 50Hz, IP54, isolation class F, can also be connected to alternating current using an operating capacitor.

General data page 722.

Motor and gearbox with roller bearing.
Worms hardened and ground.
Worm gears made from special brass.



Ordering details: Type, Voltage/Frequency, poss. Operating Capacitor, Motor Data, Ratio, Product No.

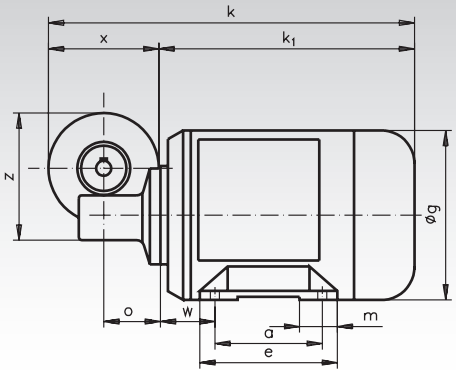

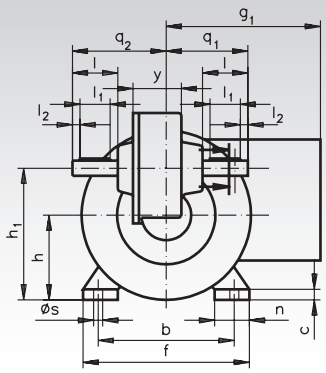

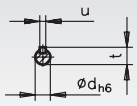

Feather key not according to DIN

Load Bearing Capacity of the Output Shaft: radial 100 N, axial 60 N

Power / Watt	a mm	b mm	c mm	e mm	f mm	h mm	h_1 mm	m mm	n mm	Øs mm	w mm	g mm	g_1 mm	k mm	k_1 mm	o mm	q_1 mm	q_2 mm	x mm	y mm	z mm	Ød mm	l mm	l_1 mm	l_2 mm	t mm	u m
45	90	80	7	110	100	56	87	30	34	6,6	14	107	87	196	122	37,5	54	62	74	32	84	10	30	20	5	11,5	4
90	71	90	6	84	110	56	87	22	23	6	36	112	102	242	168	37,5	54	62	74	32	84	10	30	20	5	11,5	4

Dimensions without stated tolerances are non-binding!

Motor Data without Ventilation 45 Watt, 1400 min^{-1}, ca. 0.18 A at 400 Volt

Product No.	Output-Speed min^{-1}	Ratio i =	Permiss. Torque at the Output Shaft Nm	Weight kg	Product No. Operating Capacitor 5µF
433 01 005	280	5 : 1	1,2	3,7	**436 356 00**
433 01 007	200	7 : 1	1,7	3,7	**436 356 00**
433 01 010	140	10 : 1	2,1	3,7	**436 356 00**
433 01 015	93	15 : 1	3,0	3,7	**436 356 00**
433 01 020	70	20 : 1	3,7	3,7	**436 356 00**
433 01 024	58	24 : 1	3,6	3,7	**436 356 00**
433 01 030	47	30 : 1	4,5	3,7	**436 356 00**
433 01 038	37	38 : 1	5,6	3,7	**436 356 00**
433 01 050	28	50 : 1	5,7	3,7	**436 356 00**
433 01 055	25	55 : 1	7,3	3,7	**436 356 00**
433 01 075	19	75 : 1	6,4	3,7	**436 356 00**
433 01 100	14	100 : 1	8,9*	3,7	**436 356 00**

* Stability related max. torque.

Motor Data 90 Watt, 1400 min^{-1}, ca. 0.45 A at 400 Volt

Product No.	Output-Speed min^{-1}	Ratio i =	Permiss. Torque at the Output Shaft Nm	Weight kg	Product No. Operating Capacitor 10µF
433 02 005	280	5 : 1	2,4	4,1	**436 359 00**
433 02 007	200	7 : 1	3,3	4,1	**436 359 00**
433 02 010	140	10 : 1	4,3	4,1	**436 359 00**
433 02 015	93	15 : 1	6,1	4,1	**436 359 00**
433 02 020	70	20 : 1	7,5	4,1	**436 359 00**
433 02 024	58	24 : 1	7,2	4,1	**436 359 00**
433 02 030	47	30 : 1	9,0	4,1	**436 359 00**
433 02 038	37	38 : 1	11,0	4,1	**436 359 00**
433 02 050	28	50 : 1	11,0*	4,1	**436 359 00**
433 02 055	25	55 : 1	13,0*	4,1	**436 359 00**
433 02 075	19	75 : 1	8,8*	4,1	**436 359 00**
433 02 100	14	100 : 1	8,9*	4,1	**436 359 00**

* Stability related max. torque.

Worm Geared Motors MEG with One-Stage Worm Gear Unit

230/400V, 50Hz, IP54, isolation class F, can also be connected to alternating current using an operating capacitor.

General data page 722.

Motor and gearbox with roller bearing.
Worms hardened and ground.
Worm gears made from special brass.



Ordering details: Type, Voltage/Frequency, poss. Operating Capacitor, Motor Data, Ratio, Product No.

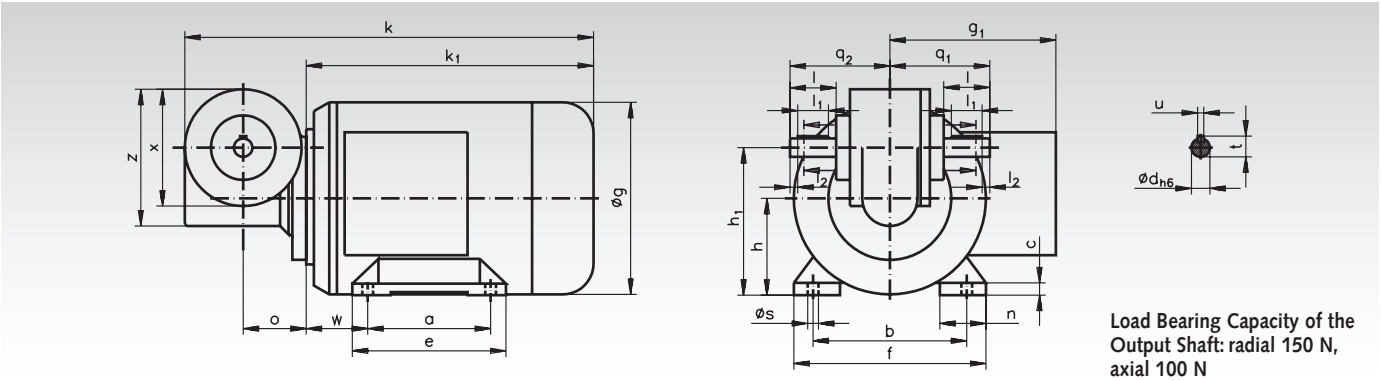

Load Bearing Capacity of the Output Shaft: radial 150 N, axial 100 N

a mm	b mm	c mm	e mm	f mm	h mm	h_1 mm	n mm	Ø s mm	w mm	g mm	g_1 mm	k mm	k_1 mm	o mm	q_1 mm	q_2 mm	x mm	z mm	Ø d mm	l mm	l_1 mm	l_2 mm	t mm	u mm
80	100	7,5	96	122	63	96	25	7	40	125	108	266	187	41	65	65	76	89	12	30	20	5	13,5	4

Dimensions without stated tolerances are non-binding!

Motor Data 180 Watt, 1400 min^{-1}, ca. 0.7 A at 400 Volt

Product No.	Output-Speed min^{-1}	Ratio i =	Permiss. Torque at the Output Shaft Nm	Weight kg	Product No. Operating Capacitor 20µF
433 05 005	280	5 : 1	4,8	6,2	**436 362 00**
433 05 007	200	7 : 1	6,4	6,2	**436 362 00**
433 05 011	124	11 : 1	9,3	6,2	**436 362 00**
433 05 015	93	15 : 1	11	6,2	**436 362 00**
433 05 017	82	17 : 1	13	6,2	**436 362 00**
433 05 020	70	20 : 1	14	6,2	**436 362 00**
433 05 024	58	24 : 1	15	6,2	**436 362 00**
433 05 030	47	30 : 1	15*	6,2	**436 362 00**
433 05 032	44	32 : 1	16*	6,2	**436 362 00**
433 05 038	37	38 : 1	17*	6,2	**436 362 00**
433 05 056	25	56 : 1	12*	6,2	**436 362 00**
433 05 075	19	75 : 1	11*	6,2	**436 362 00**

* Stability related max. torque.

Motor Data 250 Watt, 2800 min^{-1}, ca. 0.75 A at 400 Volt

Product No.	Output-Speed min^{-1}	Ratio i =	Permiss. Torque at the Output Shaft Nm	Weight kg	Product No. Operating Capacitor 25µF
433 06 005	560	5 : 1	3,5	6,3	**436 363 00**
433 06 007	400	7 : 1	4,6	6,3	**436 363 00**
433 06 011	247	11 : 1	6,8	6,3	**436 363 00**
433 06 015	187	15 : 1	8,3	6,3	**436 363 00**
433 06 017	165	17 : 1	9,6	6,3	**436 363 00**
433 06 020	140	20 : 1	10	6,3	**436 363 00**
433 06 024	117	24 : 1	11	6,3	**436 363 00**
433 06 030	93	30 : 1	13	6,3	**436 363 00**
433 06 032	88	32 : 1	14	6,3	**436 363 00**
433 06 038	74	38 : 1	15	6,3	**436 363 00**
433 06 056	50	56 : 1	12*	6,3	**436 363 00**
433 06 075	37	75 : 1	11*	6,3	**436 363 00**

* Stability related max. torque.

Worm Geared Motors MH with One-Stage Worm Gear Unit and Hollow Shaft

230/400V, 50Hz, IP54, isolation class F, can also be connected to alternating current using an operating capacitor.

General data page 722.

Motor and gearbox with roller bearing.
Worms hardened and ground.
Worm gears made from special brass.



Ordering details: Type, Voltage/Frequency, poss. Operating Capacitor, Motor Data, Ratio, Product No.

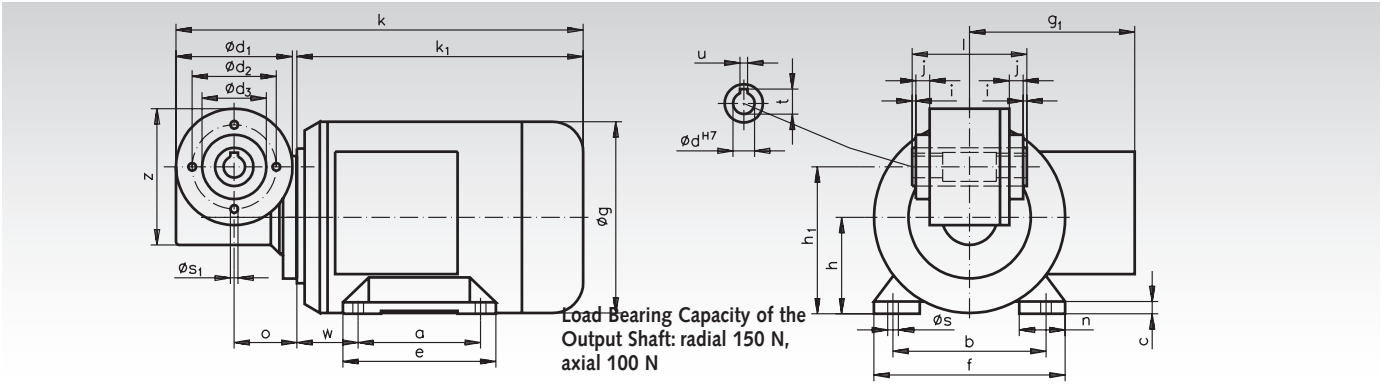

Load Bearing Capacity of the Output Shaft: radial 150 N, axial 100 N

a mm	b mm	c mm	Ød1 mm	Ød2 mm	Ød3 mm	e mm	f mm	h mm	h1 mm	j mm	n mm	Øs mm	Øs1 mm	w mm	g mm	g1 mm	k mm	k1 mm	o mm	z mm	Ød mm	i mm	l mm	t mm	u mm
80	100	7,5	76	55	42	96	122	63	96	9	25	7	M5	40	125	108	266	187	41	89	14	3	75	16,3	5

Hollow shaft centre 35mm relieved!
Dimensions without stated tolerances are non-binding!

Motor Data 180 Watt, 1400 min^{-1}, ca. 0.7 A at 400 Volt

Product No.	Output-Speed min^{-1}	Ratio i =	Permiss. Torque at the Output Shaft Nm	Weight kg	Product No. Operating Capacitor 20µF
433 30 005	280	5 : 1	4,8	6,4	**436 362 00**
433 30 007	200	7 : 1	6,4	6,4	**436 362 00**
433 30 011	124	11 : 1	9,3	6,4	**436 362 00**
433 30 015	93	15 : 1	11	6,4	**436 362 00**
433 30 017	82	17 : 1	13	6,4	**436 362 00**
433 30 020	70	20 : 1	14	6,4	**436 362 00**
433 30 024	58	24 : 1	15	6,4	**436 362 00**
433 30 030	47	30 : 1	15*	6,4	**436 362 00**
433 30 032	44	32 : 1	16*	6,4	**436 362 00**
433 30 038	37	38 : 1	17*	6,4	**436 362 00**
433 30 056	25	56 : 1	12*	6,4	**436 362 00**
433 30 075	19	75 : 1	11*	6,4	**436 362 00**

*** Stability related max. torque.**

Motor Data 250 Watt, 2800 min^{-1}, ca. 0.75 A at 400 Volt

Product No.	Output-Speed min^{-1}	Ratio i =	Permiss. Torque at the Output Shaft Nm	Weight kg	Product No. Operating Capacitor 25µF
433 31 005	560	5 : 1	3,5	6,5	**436 363 00**
433 31 007	400	7 : 1	4,6	6,5	**436 363 00**
433 31 011	247	11 : 1	6,8	6,5	**436 363 00**
433 31 015	187	15 : 1	8,3	6,5	**436 363 00**
433 31 017	165	17 : 1	9,6	6,5	**436 363 00**
433 31 020	140	20 : 1	10	6,5	**436 363 00**
433 31 024	117	24 : 1	11	6,5	**436 363 00**
433 31 030	93	30 : 1	13	6,5	**436 363 00**
433 31 032	88	32 : 1	14	6,5	**436 363 00**
433 31 038	74	38 : 1	15	6,5	**436 363 00**
433 31 056	50	56 : 1	12*	6,5	**436 363 00**
433 31 075	37	75 : 1	11*	6,5	**436 363 00**

*** Stability related max. torque.**

Helical Worm Geared Motors SRM

230/400V, 50Hz, IP54, isolation class F, can also be connected to alternating current using an operating capacitor.

General data page 722.

Motor and gearbox with roller bearing.
1st stage: Worms hardened and ground,
Worm gears special brass.
2nd stage: Helical gear set hardened and ground.



Ordering details: Type, Voltage/Frequency, poss. Operating Capacitor, Motor Data, Ratio, Product No.

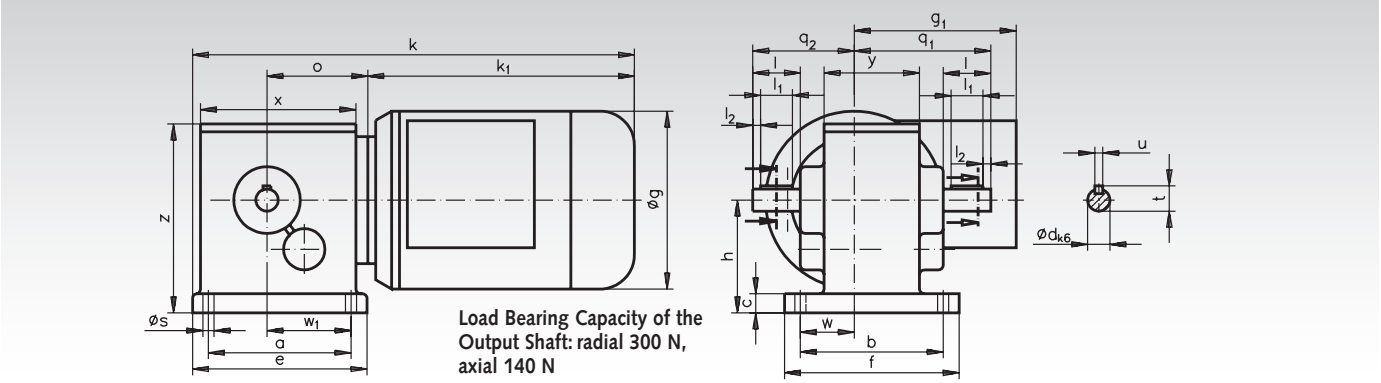

Load Bearing Capacity of the Output Shaft: radial 300 N, axial 140 N

a	b	c	e	f	h	Ø s	w	w_1	g	g_1	k	k_1	o	q_1	q_2	x	y	z	Ø d	l	l_1	l_2	t	u
mm	mm	mm	mm	mm	mm	mm	mm	mm	mm	mm	mm	mm	mm	mm	mm	mm	mm	mm	mm	mm	mm	mm	mm	mm
90	90	12	110	110	71	7	34	53	112	102	278,5	168	63,5	86	64	98	60	119	14	30	20	5	16	5

Dimensions without stated tolerances are non-binding!

Motor Data 90 Watt, 1400 min^{-1}, ca. 0.45 A at 400 Volt

Product No.	Output-Speed min^{-1}	Ratio i =	Permiss. Torque at the Output Shaft Nm	Weight kg	Product No. Operating Capacitor 10µF
434 50 012	112	12,5 : 1	6,1	5,2	**436 359 00**
434 50 021	65	21 : 1	10	5,2	**436 359 00**
434 50 025	56	25 : 1	12	5,2	**436 359 00**
434 50 035	40	35 : 1	16	5,2	**436 359 00**
434 50 060	23	60 : 1	24	5,2	**436 359 00**
434 50 090	16	90 : 1	25*	5,2	**436 359 00**
434 50 100	14	100 : 1	25*	5,2	**436 359 00**
434 50 120	12	120 : 1	25*	5,2	**436 359 00**
434 50 150	9,3	150 : 1	25*	5,2	**436 359 00**
434 50 190	7,4	190 : 1	25*	5,2	**436 359 00**
434 50 375	3,7	375 : 1	25*	5,2	**436 359 00**
434 50 500	2,8	500 : 1	25*	5,2	**436 359 00**

* Stability related max. torque.

Motor Data 120 Watt, 2800 min^{-1}, ca. 0.5 A at 400 Volt

Product No.	Output-Speed min^{-1}	Ratio i =	Permiss. Torque at the Output Shaft Nm	Weight kg	Product No. Operating Capacitor 16µF
434 51 012	224	12,5 : 1	4,1	5,2	**436 361 00**
434 51 021	131	21 : 1	6,8	5,2	**436 361 00**
434 51 025	112	25 : 1	8	5,2	**436 361 00**
434 51 035	80	35 : 1	11	5,2	**436 361 00**
434 51 060	47	60 : 1	17	5,2	**436 361 00**
434 51 090	31	90 : 1	23	5,2	**436 361 00**
434 51 100	28	100 : 1	25*	5,2	**436 361 00**
434 51 120	23	120 : 1	25*	5,2	**436 361 00**
434 51 150	19	150 : 1	25*	5,2	**436 361 00**
434 51 190	15	190 : 1	25*	5,2	**436 361 00**
434 51 375	7,5	375 : 1	25*	5,2	**436 361 00**
434 51 500	5,6	500 : 1	25*	5,2	**436 361 00**

* Stability related max. torque.

Worm Geared Motors R with One-Stage Worm Gears

230/400V, 50Hz, IP54, isolation class F, can also be connected to alternating current using an operating capacitor.

General data page 722.

Motor and gearbox with roller bearing.
Worms hardened and ground.
Worm gears made from special brass.

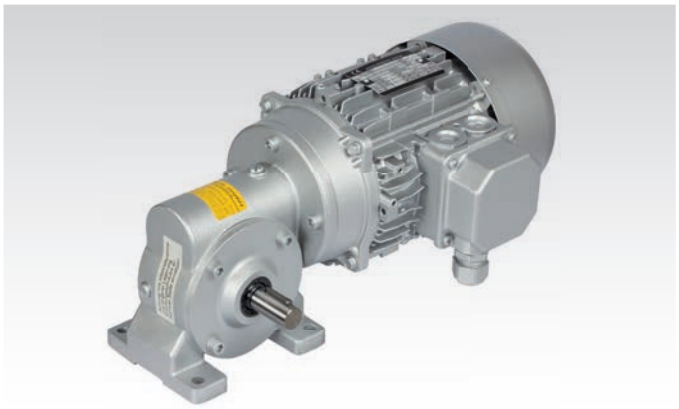

Ordering details: Type, Voltage/Frequency, possibly Operating Capacitor, Motor Data, Ratio, Product No.

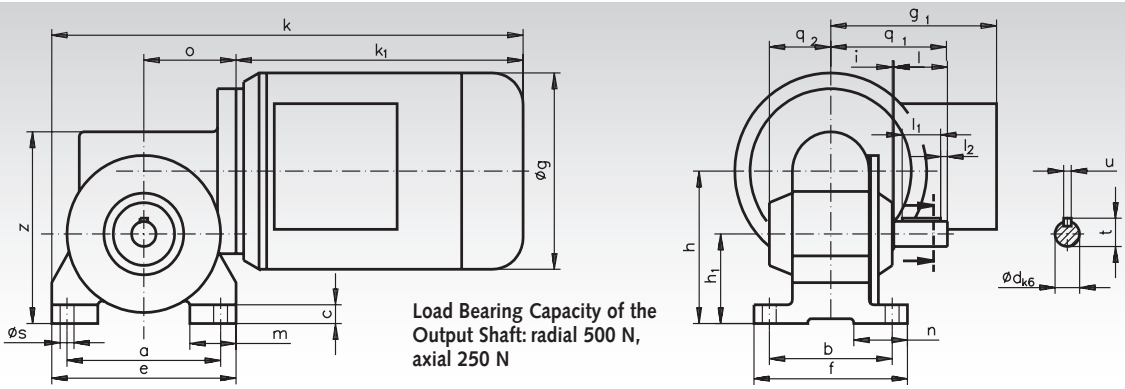

Load Bearing Capacity of the Output Shaft: radial 500 N, axial 250 N

Power Watt	a mm	b mm	c mm	e mm	f mm	h mm	h_1 mm	m mm	n mm	Øs mm	g mm	g_1 mm	k mm	k_1 mm	o mm	q_1 mm	q_2 mm	z mm	Ød mm	i mm	l mm	l_1 mm	l_2 mm	t mm	u mm
180	100	80	12	120	100	97	57	30	35	9	125	108	307	187	60	76	40	122	16	1	35	25	5	18	5
250	100	80	12	120	100	97	57	30	35	9	140	114	327	207	60	76	40	122	16	1	35	25	5	18	5

Dimensions without stated tolerances are non-binding!

Motor Data 180 Watt, 1400 min^{-1}, ca. 0.7 A at 400 Volt

Product No.	Output-Speed min^{-1}	Ratio i =	Permiss. Torque at the Output Shaft Nm	Weight kg	Product No. Operating Capacitor 20µF
433 08 007	207	7 : 1	6,5	6,5	**436 362 00**
433 08 008	175	8 : 1	7,4	6,5	**436 362 00**
433 08 010	140	10 : 1	9,1	6,5	**436 362 00**
433 08 012	117	12 : 1	10	6,5	**436 362 00**
433 08 015	93	15 : 1	12	6,5	**436 362 00**
433 08 020	70	20 : 1	15	6,5	**436 362 00**
433 08 025	56	25 : 1	17	6,5	**436 362 00**
433 08 030	47	30 : 1	20	6,5	**436 362 00**
433 08 040	35	40 : 1	23	6,5	**436 362 00**
433 08 050	28	50 : 1	27	6,5	**436 362 00**
433 08 060	23	60 : 1	21	6,5	**436 362 00**
433 08 080	18	80 : 1	24*	6,5	**436 362 00**

* Stability related max. torque.

Motor Data 250 Watt, 1400 min^{-1}, ca. 0,8 A at 400 Volt

Product No.	Output-Speed min^{-1}	Ratio i =	Permiss. Torque at the Output Shaft Nm	Weight kg	Product No. Operating Capacitor 25µF
433 09 007	207	7 : 1	9	7,8	**436 363 00**
433 09 008	175	8 : 1	10	7,8	**436 363 00**
433 09 010	140	10 : 1	13	7,8	**436 363 00**
433 09 012	117	12 : 1	14	7,8	**436 363 00**
433 09 015	93	15 : 1	17	7,8	**436 363 00**
433 09 020	70	20 : 1	21	7,8	**436 363 00**
433 09 025	56	25 : 1	23	7,8	**436 363 00**
433 09 030	47	30 : 1	27	7,8	**436 363 00**
433 09 040	35	40 : 1	31	7,8	**436 363 00**
433 09 050	28	50 : 1	32*	7,8	**436 363 00**
433 09 060	23	60 : 1	23*	7,8	**436 363 00**
433 09 080	18	80 : 1	24*	7,8	**436 363 00**

* Stability related max. torque.

Worm Geared Motors RH with One-Stage Worm Gears and Hollow Shafts

230/400V, 50Hz, IP54, isolation class F, can also be connected to alternating current using an operating capacitor.

General data page 722.

Motor and gearbox with roller bearing.
Worms hardened and ground.
Worm gears made from special brass.



Ordering details: Type, Voltage/Frequency, possibl. Operating Capacitor, Motor Data, Ratio, Product No.

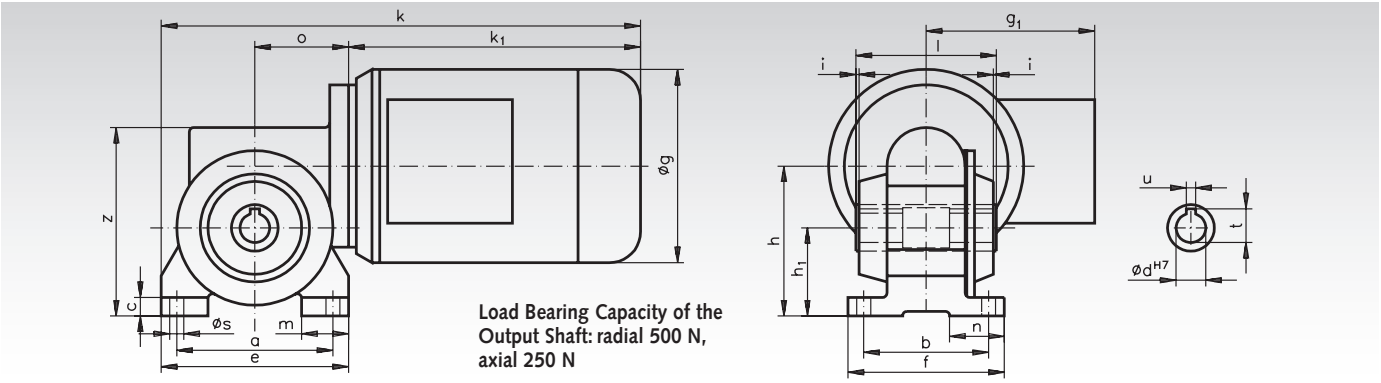

Load Bearing Capacity of the Output Shaft: radial 500 N, axial 250 N

Power Watt	a mm	b mm	c mm	e mm	f mm	h mm	h_1 mm	m mm	n mm	Øs mm	g mm	g_1 mm	k mm	k_1 mm	o mm	z mm	Ød mm	i mm	l mm	t mm	u mm
180	100	80	12	120	100	97	57	30	35	9	125	108	307	187	60	122	19	2	90	21,8	6
250	100	80	12	120	100	97	57	30	35	9	140	114	327	207	60	122	19	2	90	21,8	6

Hollow shaft centre 30mm relieved!
Dimensions without stated tolerances are non-binding!

Motor Data 180 Watt, 1400 min^{-1}, ca. 0.7 A at 400 Volt

Product No.	Output-Speed min^{-1}	Ratio i =	Permiss. Torque at the Output Shaft Nm	Weight kg	Product No. Operating Capacitor 20µF
433 36 007	207	7 : 1	6,5	6,9	**436 362 00**
433 36 008	175	8 : 1	7,4	6,9	**436 362 00**
433 36 010	140	10 : 1	9,1	6,9	**436 362 00**
433 36 012	117	12 : 1	10	6,9	**436 362 00**
433 36 015	93	15 : 1	12	6,9	**436 362 00**
433 36 020	70	20 : 1	15	6,9	**436 362 00**
433 36 025	56	25 : 1	17	6,9	**436 362 00**
433 36 030	47	30 : 1	20	6,9	**436 362 00**
433 36 040	35	40 : 1	23	6,9	**436 362 00**
433 36 050	28	50 : 1	27	6,9	**436 362 00**
433 36 060	23	60 : 1	21	6,9	**436 362 00**
433 36 080	18	80 : 1	24*	6,9	**436 362 00**

* Stability related max. torque.

Motor Data 250 Watt, 1400 min^{-1}, ca. 0.8 A at 400 Volt

Product No.	Output-Speed min^{-1}	Ratio i =	Permiss. Torque at the Output Shaft Nm	Weight kg	Product No. Operating Capacitor 25µF
433 37 007	207	7 : 1	9	8,2	**436 363 00**
433 37 008	175	8 : 1	10	8,2	**436 363 00**
433 37 010	140	10 : 1	13	8,2	**436 363 00**
433 37 012	117	12 : 1	14	8,2	**436 363 00**
433 37 015	93	15 : 1	17	8,2	**436 363 00**
433 37 020	70	20 : 1	21	8,2	**436 363 00**
433 37 025	56	25 : 1	23	8,2	**436 363 00**
433 37 030	47	30 : 1	27	8,2	**436 363 00**
433 37 040	35	40 : 1	31	8,2	**436 363 00**
433 37 050	28	50 : 1	32*	8,2	**436 363 00**
433 37 060	23	60 : 1	23*	8,2	**436 363 00**
433 37 080	18	80 : 1	24*	8,2	**436 363 00**

* Stability related max. torque.

Helical Worm Geared Motors SRS

230/400V, 50Hz, IP54, isolation class F, can also be connected to alternating current using an operating capacitor.

General data page 722.

Motor and gear shaft with roller bearing.
1st stage: Worms hardened and ground,
Worm gears special brass.
2nd stage: Helical gear set hardened and ground.

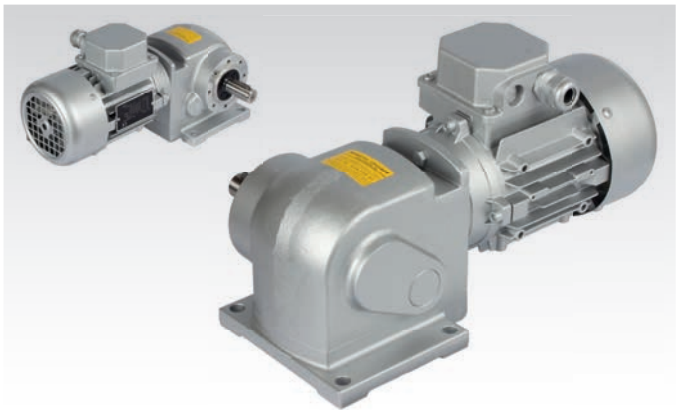

Ordering details: Type, Voltage/Frequency, possibl. Operating Capacitor, Motor Data, Ratio, Product No.

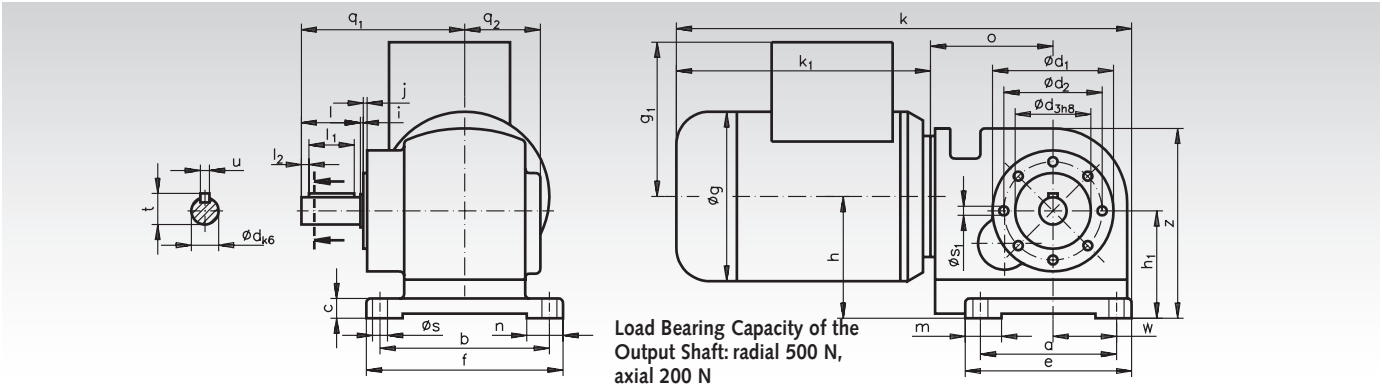

Load Bearing Capacity of the Output Shaft: radial 500 N, axial 200 N

a	b	c	Ød1	Ød2	Ød3	e	f	h	h1	j	m	n	Øs	Øs1	w	g	g1	k	k1	o	q1	q2	z	Ød	i	l	l1	l2	t	u
mm	mm	mm	mm	mm	mm	mm	mm	mm	mm	mm	mm	mm	mm	mm	mm	mm	mm	mm	mm	mm	mm	mm	mm	mm	mm	mm	mm	mm	mm	mm
90	112	13	80	65	50	110	130	80,5	70,9	2,5	24	24	10	M5	42	112	102	301	168	81	108	50	125,5	18	0,8	40	30	5	20,5	6

Dimensions without stated tolerances are non-binding!

Motor Data 90 Watt, 1400 min^{-1}, ca. 0.45 A at 400 Volt

Product No.	Output-Speed min^{-1}	Ratio i =	Permiss. Torque at the Output Shaft Nm	Weight kg	Product No. Operating Capacitor 10µF
434 55 015	95	15 : 1	7,2	6,6	**436 359 00**
434 55 030	47	30 : 1	14	6,6	**436 359 00**
434 55 041	34	41 : 1	19	6,6	**436 359 00**
434 55 059	24	59 : 1	24	6,6	**436 359 00**
434 55 071	20	71 : 1	29	6,6	**436 359 00**
434 55 089	16	89 : 1	34	6,6	**436 359 00**
434 55 106	13	106 : 1	38	6,6	**436 359 00**
434 55 142	10	142 : 1	41	6,6	**436 359 00**
434 55 177	7,9	177 : 1	50*	6,6	**436 359 00**
434 55 295	4,7	295 : 1	50*	6,6	**436 359 00**
434 55 443	3,2	443 : 1	50*	6,6	**436 359 00**
434 55 591	2,4	591 : 1	50*	6,6	**436 359 00**

* Stability related max. torque.

Motor Data 120 Watt, 2800 min^{-1}, ca. 0.5 A at 400 Volt

Product No.	Output-Speed min^{-1}	Ratio i =	Permiss. Torque at the Output Shaft Nm	Weight kg	Product No. Operating Capacitor 16µF
434 56 015	190	15 : 1	4,9	6,6	**436 361 00**
434 56 030	95	30 : 1	9,4	6,6	**436 361 00**
434 56 041	68	41 : 1	13	6,6	**436 361 00**
434 56 059	47	59 : 1	17	6,6	**436 361 00**
434 56 071	39	71 : 1	20	6,6	**436 361 00**
434 56 089	32	89 : 1	24	6,6	**436 361 00**
434 56 106	26	106 : 1	27	6,6	**436 361 00**
434 56 142	20	142 : 1	30	6,6	**436 361 00**
434 56 177	16	177 : 1	37	6,6	**436 361 00**
434 56 295	9,5	295 : 1	46	6,6	**436 361 00**
434 56 443	6,3	443 : 1	50*	6,6	**436 361 00**
434 56 591	4,7	591 : 1	50*	6,6	**436 361 00**

* Stability related max. torque.

Worm Geared Motors MZ with Two-Stage Worm Gears

230/400V, 50Hz, IP54, isolation class F, can also be connected to alternating current using an operating capacitor.

General data page 722.

Motor and gearbox with roller bearing.
Worms hardened and ground.
Worm gears made from special bronze.



Ordering details: Type, Voltage/Frequency, possibly Operating Capacitor, Motor Data, Ratio, Product No.

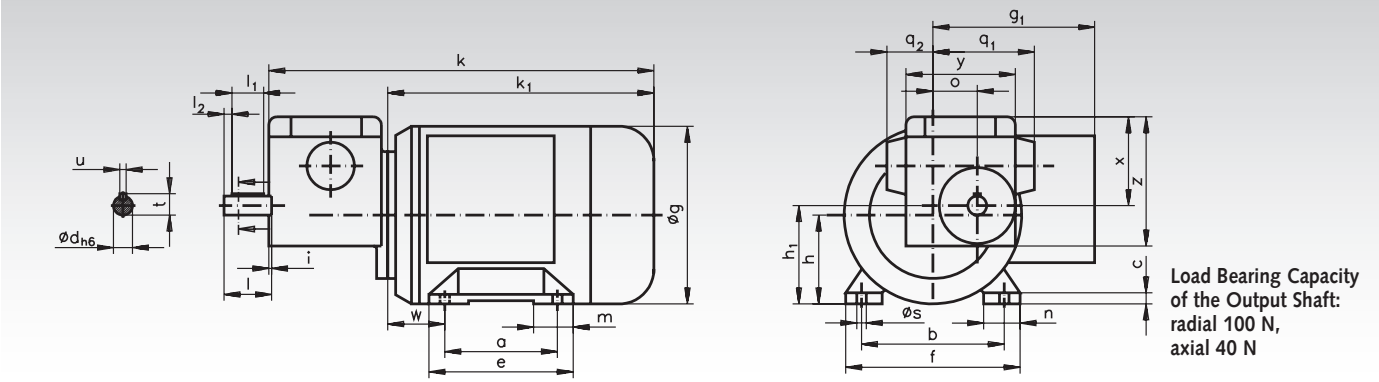

Load Bearing Capacity of the Output Shaft: radial 100 N, axial 40 N

a	b	c	e	f	h	h_1	m	n	Ø s	w	g	g_1	k	k_1	o	q_1	q_2	x	y	z	Ø d	i	l	l_1	l_2	t	u
mm	mm	mm	mm	mm	mm	mm	mm	mm	mm	mm	mm	mm	mm	mm	mm	mm	mm	mm	mm	mm	mm	mm	mm	mm	mm	mm	mm
71	90	6	84	110	56	62	22	23	6	36	112	102	243	168	28	64	30	56	70	81	12	1	30	20	5	13,5	4

Dimensions without stated tolerances are non-binding!

Motor Data 90 Watt, 1400 min^{-1}, ca. 0.45 A at 400 Volt

Product No.	Output-Speed min^{-1}	Ratio i =	Permiss. Torque at the Output Shaft Nm	Weight kg	Product No. Operating Capacitor 10µF
434 02 012	112	12,5 : 1	4,8*	4,2	**436 359 00**
434 02 025	56	25 : 1	7,8*	4,2	**436 359 00**
434 02 050	28	50 : 1	7,8*	4,2	**436 359 00**
434 02 070	20	70 : 1	7,1*	4,2	**436 359 00**
434 02 100	14	100 : 1	6,1*	4,2	**436 359 00**
434 02 125	11	125 : 1	7,8*	4,2	**436 359 00**
434 02 250	5,6	250 : 1	7,1*	4,2	**436 359 00**
434 02 400	3,5	400 : 1	7,4*	4,2	**436 359 00**
434 02 750	1,9	750 : 1	7,1*	4,2	**436 359 00**
434 02 990	1,1	1250 : 1	6,1*	4,2	**436 359 00**
434 02 992	0,9	1500 : 1	7,1*	4,2	**436 359 00**

* Stability related max. torque.

Motor Data 120 Watt, 2800 min^{-1}, ca. 0.5 A at 400 Volt

Product No.	Output-Speed min^{-1}	Ratio i =	Permiss. Torque at the Output Shaft Nm	Weight kg	Product No. Operating Capacitor 16µF
434 03 012	224	12,5 : 1	3,4	4,2	**436 361 00**
434 03 025	112	25 : 1	6,6	4,2	**436 361 00**
434 03 050	56	50 : 1	7,8*	4,2	**436 361 00**
434 03 070	40	70 : 1	7,1*	4,2	**436 361 00**
434 03 100	28	100 : 1	6,1*	4,2	**436 361 00**
434 03 125	22	125 : 1	7,8*	4,2	**436 361 00**
434 03 250	11	250 : 1	7,1*	4,2	**436 361 00**
434 03 400	7	400 : 1	7,4*	4,2	**436 361 00**
434 03 750	3,7	750 : 1	7,1*	4,2	**436 361 00**
434 03 990	2,2	1250 : 1	6,1*	4,2	**436 361 00**
434 03 992	1,9	1500 : 1	7,1*	4,2	**436 361 00**

* Stability related max. torque.

Worm Geared Motors RL with Two-Stage Worm Gears

230/400V, 50Hz, IP54, isolation class F, can also be connected to alternating current using an operating capacitor.

General data page 722.

Motor and gearbox with roller bearings.
Worms hardened and ground.
Worm gears made from special brass.



Ordering details: Type, Voltage/Frequency, possibl. Operating Capacitor, Motor Data, Ratio, Product No.

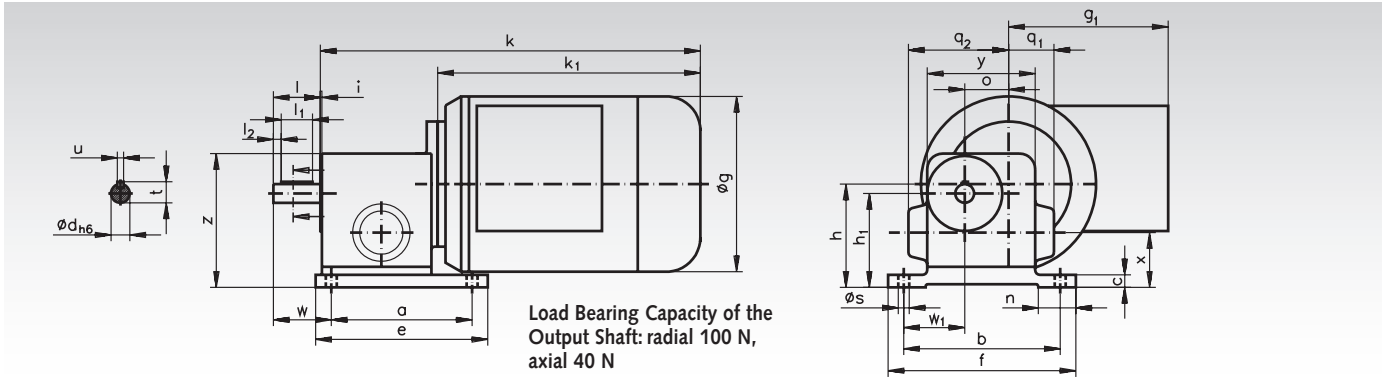

Load Bearing Capacity of the Output Shaft: radial 100 N, axial 40 N

a mm	b mm	c mm	e mm	f mm	h mm	h_1 mm	n mm	Øs mm	w mm	w_1 mm	g mm	g_1 mm	k mm	k_1 mm	o mm	q_1 mm	q_2 mm	x mm	y mm	z mm	Ød mm	i mm	l mm	l_1 mm	l_2 mm	t mm	u mm
90	100	8	110	120	66	60	24	6	37	40	112	102	243	168	28	30	64	35	70	85	12	1	30	20	5	13,5	4

Dimensions without stated tolerances are non-binding!

Motor Data 90 Watt, 1400 min^{-1}, ca. 0.45 A at 400 Volt

Product No.	Output-Speed min^{-1}	Ratio i =	Permiss. Torque at the Output Shaft Nm	Weight kg	Product No. Operating Capacitor 10µF
434 05 012	112	12,5 : 1	4,8	4,2	**436 359 00**
434 05 025	56	25 : 1	7,8*	4,2	**436 359 00**
434 05 050	28	50 : 1	7,8*	4,2	**436 359 00**
434 05 070	20	70 : 1	7,1*	4,2	**436 359 00**
434 05 100	14	100 : 1	6,1*	4,2	**436 359 00**
434 05 125	11	125 : 1	7,8*	4,2	**436 359 00**
434 05 250	5,6	250 : 1	7,1*	4,2	**436 359 00**
434 05 400	3,5	400 : 1	7,4*	4,2	**436 359 00**
434 05 750	1,9	750 : 1	7,1*	4,2	**436 359 00**
434 05 990	1,1	1250 : 1	6,1*	4,2	**436 359 00**
434 05 992	0,9	1500 : 1	7,1*	4,2	**436 359 00**

* Stability related max. torque.

Motor Data 120 Watt, 2800 min^{-1}, ca. 0.5 A at 400 Volt

Product No.	Output-Speed min^{-1}	Ratio i =	Permiss. Torque at the Output Shaft Nm	Weight kg	Product No. Operating Capacitor 16µF
434 06 012	224	12,5 : 1	3,4	4,2	**436 361 00**
434 06 025	112	25 : 1	6,6	4,2	**436 361 00**
434 06 050	56	50 : 1	7,8*	4,2	**436 361 00**
434 06 070	40	70 : 1	7,1*	4,2	**436 361 00**
434 06 100	28	100 : 1	6,1*	4,2	**436 361 00**
434 06 125	22	125 : 1	7,8*	4,2	**436 361 00**
434 06 250	11	250 : 1	7,1*	4,2	**436 361 00**
434 06 400	7	400 : 1	7,4*	4,2	**436 361 00**
434 06 750	3,7	750 : 1	7,1*	4,2	**436 361 00**
434 06 990	2,2	1250 : 1	6,1*	4,2	**436 361 00**
434 06 992	1,9	1500 : 1	7,1*	4,2	**436 361 00**

* Stability related max. torque.

Worm Geared Motors RM with Two-Stage Worm Gears

230/400V, 50Hz, IP54, isolation class F, can also be connected to alternating current using an operating capacitor.

General data page 722.

Motor and gearbox with roller bearing.
Worms hardened and ground.
Worm gears made from special brass.



Ordering details: Type, Voltage/Frequency, possibly Operating Capacitor, Motor Data, Ratio, Product No.

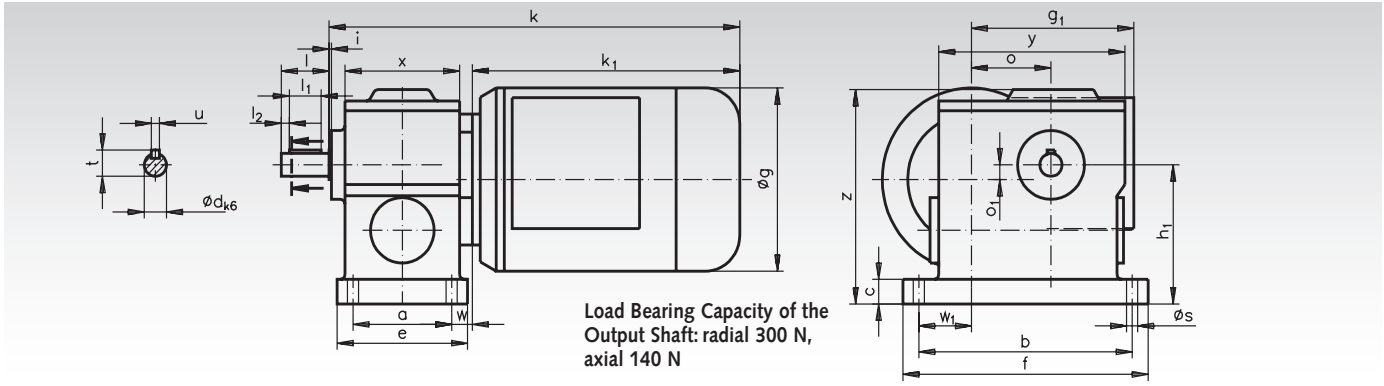

Load Bearing Capacity of the Output Shaft: radial 300 N, axial 140 N

a mm	b mm	c mm	e mm	f mm	h_1 mm	Ø s mm	w mm	w_1 mm	g mm	g_1 mm	k mm	k_1 mm	o mm	o_1 mm	x mm	y mm	z mm	Ø d mm	i mm	l mm	l_1 mm	l_2 mm	t mm	u mm
62	134	15	82	154	85	6,6	13	33	112	102	258	168	50	9	72	117	131	14	1,5	30	20	5	16	5

Dimensions without stated tolerances are non-binding!

Motor Data 90 Watt, 1400 min^{-1}, ca. 0.45 A at 400 Volt

Product No.	Output-Speed min^{-1}	Ratio i =	Permiss. Torque at the Output Shaft Nm	Weight kg	Product No. Operating Capacitor 10µF
434 08 050	28	50 : 1	18	5,7	**436 359 00**
434 08 100	14	100 : 1	32	5,7	**436 359 00**
434 08 200	7	200 : 1	35*	5,7	**436 359 00**
434 08 300	4,7	300 : 1	36*	5,7	**436 359 00**
434 08 380	3,7	380 : 1	35*	5,7	**436 359 00**
434 08 500	2,8	500 : 1	35*	5,7	**436 359 00**
434 08 750	1,9	750 : 1	36*	5,7	**436 359 00**
434 08 988	1,2	1140 : 1	36*	5,7	**436 359 00**
434 08 992	0,9	1500 : 1	36*	5,7	**436 359 00**
434 08 996	0,6	2250 : 1	36*	5,7	**436 359 00**

* Stability related max. torque.

Motor Data 120 Watt, 2800 min^{-1}, ca. 0.5 A at 400 Volt

Product No.	Output-Speed min^{-1}	Ratio i =	Permiss. Torque at the Output Shaft Nm	Weight kg	Product No. Operating Capacitor 16µF
434 09 050	56	50 : 1	13	5,7	**436 361 00**
434 09 100	28	100 : 1	23	5,7	**436 361 00**
434 09 200	14	200 : 1	35*	5,7	**436 361 00**
434 09 300	9,3	300 : 1	36*	5,7	**436 361 00**
434 09 380	7,4	380 : 1	35*	5,7	**436 361 00**
434 09 500	5,6	500 : 1	35*	5,7	**436 361 00**
434 09 750	3,7	750 : 1	36*	5,7	**436 361 00**
434 09 988	2,5	1140 : 1	36*	5,7	**436 361 00**
434 09 992	1,9	1500 : 1	36*	5,7	**436 361 00**
434 09 996	1,2	2250 : 1	36*	5,7	**436 361 00**

* Stability related max. torque.

Worm Geared Motors RS with Two-Stage Worm Gears

230/400V, 50Hz, I54, isolation class F, can also be connected to alternating current using an operating capacitor.

General data page 722.

Motor and gearbox with roller bearing.
Worms hardened and ground.
Worm gears made from special brass.



Ordering details: Type, Voltage/Frequency, possibl. Operating Capacitor, Motor Data, Ratio, Product No.

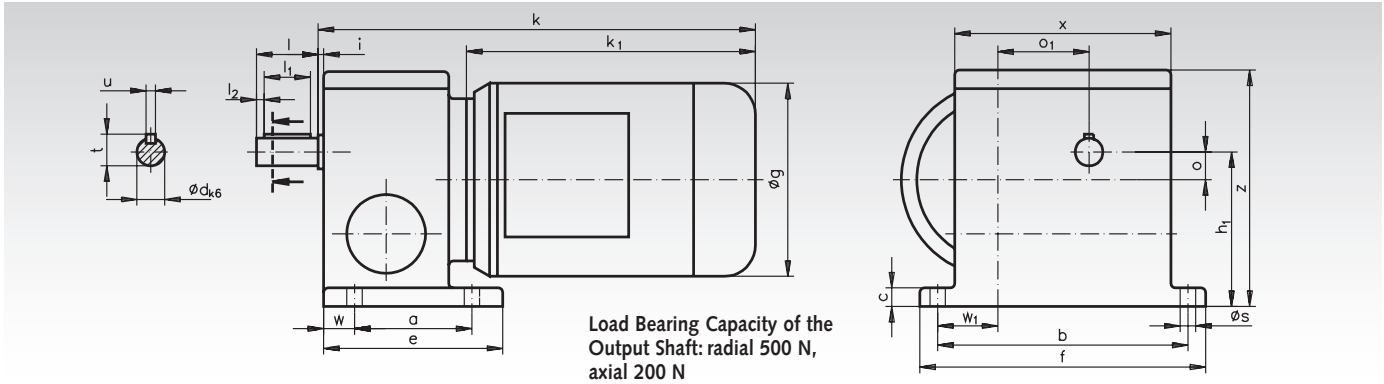

Load Bearing Capacity of the Output Shaft: radial 500 N, axial 200 N

a mm	b mm	c mm	e mm	f mm	h_1 mm	Øs mm	w mm	w_1 mm	g mm	k mm	k_1 mm	o mm	o_1 mm	x mm	z mm	Ød mm	i mm	l mm	l_1 mm	l_2 mm	t mm	u mm
76	162	12	116	185	100	10	20	39	125	283	187	18	59	140	153	18	3,5	40	30	5	20,5	6

Dimensions without stated tolerances are non-binding!

Motor Data 180 Watt, 1400 min^{-1}, ca. 0.75 A at 400 Volt

Product No.	Output-Speed min^{-1}	Ratio i =	Permiss. Torque at the Output Shaft Nm	Weight kg	Product No. Operating Capacitor 20µF
434 12 070	20	70 : 1	46	9,5	**436 362 00**
434 12 105	13	105 : 1	58	9,5	**436 362 00**
434 12 150	9,3	150 : 1	73	9,5	**436 362 00**
434 12 225	6,2	225 : 1	90*	9,5	**436 362 00**
434 12 276	5,1	276 : 1	81*	9,5	**436 362 00**
434 12 360	3,9	360 : 1	93*	9,5	**436 362 00**
434 12 450	3,1	450 : 1	93*	9,5	**436 362 00**
434 12 570	2,5	570 : 1	81*	9,5	**436 362 00**
434 12 750	1,9	750 : 1	93*	9,5	**436 362 00**
434 12 986	1,3	1050 : 1	113*	9,5	**436 362 00**
434 12 994	0,9	1520 : 1	81*	9,5	**436 362 00**
434 12 998	0,6	2500 : 1	72*	9,5	**436 362 00**

* Stability related max. torque.

Motor Data 250 Watt, 2800 min^{-1}, ca. 0.75 A at 400 Volt

Product No.	Output-Speed min^{-1}	Ratio i =	Permiss. Torque at the Output Shaft Nm	Weight kg	Product No. Operating Capacitor 25µF
434 13 070	40	70 : 1	34	9,6	**436 363 00**
434 13 105	27	105 : 1	45	9,6	**436 363 00**
434 13 150	19	150 : 1	57	9,6	**436 363 00**
434 13 225	12	225 : 1	83	9,6	**436 363 00**
434 13 276	10	276 : 1	81*	9,6	**436 363 00**
434 13 360	7,8	360 : 1	93*	9,6	**436 363 00**
434 13 450	6,2	450 : 1	93*	9,6	**436 363 00**
434 13 570	4,9	570 : 1	81*	9,6	**436 363 00**
434 13 750	3,7	750 : 1	93*	9,6	**436 363 00**
434 13 986	2,7	1050 : 1	113*	9,6	**436 363 00**
434 13 994	1,8	1520 : 1	81*	9,6	**436 363 00**
434 13 998	1,1	2500 : 1	72*	9,6	**436 363 00**

* Stability related max. torque.

Worm Geared Motors HMD/I

Housing: Aluminium, corrosion-inhibited coating, with mounting holes for flexible foot and flange mounting.
Worm shaft: Hardened and ground.
Worm gear: Bronze on grey cast iron hub.
Lubrication: Synthetic oil (lubricated for life).
Motor: Standard three-phase motor with small flange B14, 230/400V, 50Hz. **From 0.75 kW in efficiency class IE3.**
Other motor versions (AC motor, posistor, forced ventilation, brake etc.) on request.

Light-weight, high-quality model range with many mounting options. These maintenance-free, geared motors without ventilation can be used in **any mounting position**. The mounting positions V5 and V6 (worm shaft vertical) are however not recommended for continuous operation.

Output shaft push-in type: The basic gearbox version has a hollow shaft. They can, however, also be supplied with a push-in type output shaft (single sided, to be used left and right, or double sided). These output shafts have their own product number and have to be ordered separately.

Variable mounting: The geared motors are supplied without foot mounting. The foot mounting, which has to be ordered separately, can however easily be screwed on, if a foot mounting is required. The position of the foot can be changed for different mounting positions.

Retrofittable flange: If an output-side flange mounting is required, this flange can easily be mounted by the customer. These flanges have their own product number and have to be ordered separately.



Ordering details: e.g.: Prod. No., Type, Motor power, Output Speed
If required: Output shaft single sided (or double sided), Prod. No., Gearbox Size
Foot Mounting, Gearbox Size, Prod. No.
Output Flange, Gearbox Size, Prod. No.
Torque Arm, Gearbox Size, Prod. No.

P = Power
n_2 = Output Speed
T_2 = Output torque
f_B = Operating factor
i_{ist} = Ratio

Product No. Standard Version	P kW	n_2 min^{-1}	T_2 Nm	f_B	i_{ist}	Gearbox Size	Motor Size	Accessories (order separately)* Product No. Single-Sided Output Shaft	Product No. Double-Sided Output Shaft	Product No. Foot Mounting	Product No. Output Flange
438 009 05	0,09	9	44	1,2	100	050	63A6	**438 051 00**	**438 052 00**	**438 053 00**	**438 054 00**
438 009 10	0,09	12,9	34	1,1	70	045	63A6	**438 041 00**	**438 042 00**	**438 043 00**	**438 044 00**
438 009 15	0,09	15	30	1,5	60	045	63A6	**438 041 00**	**438 042 00**	**438 043 00**	**438 044 00**
438 009 20	0,09	19,6	24	1,9	46	045	63A6	**438 041 00**	**438 042 00**	**438 043 00**	**438 044 00**
438 009 25	0,09	23	19	1	61	030	56B4	**438 031 00**	**438 032 00**	**438 033 00**	**438 034 00**
438 009 30	0,09	35	14	1,4	40	030	56B4	**438 031 00**	**438 032 00**	**438 033 00**	**438 034 00**
438 009 35	0,09	46,7	11	1,8	30	030	56B4	**438 031 00**	**438 032 00**	**438 033 00**	**438 034 00**
438 009 40	0,09	70	8	2,2	20	030	56B4	**438 031 00**	**438 032 00**	**438 033 00**	**438 034 00**
438 009 45	0,09	93	7	2,7	15	030	56B4	**438 031 00**	**438 032 00**	**438 033 00**	**438 034 00**
438 009 50	0,09	140	5	3,2	10	030	56B4	**438 031 00**	**438 032 00**	**438 033 00**	**438 034 00**
438 009 55	0,09	200	3	4,7	7	030	56B4	**438 031 00**	**438 032 00**	**438 033 00**	**438 034 00**
438 012 05	0,12	12,9	49	0,8	70	045	63B6	**438 041 00**	**438 042 00**	**438 043 00**	**438 044 00**
438 012 10	0,12	17,5	38	1,4	80	050	63A4	**438 051 00**	**438 052 00**	**438 053 00**	**438 054 00**
438 012 15	0,12	20,6	34	1,6	68	050	63A4	**438 051 00**	**438 052 00**	**438 053 00**	**438 054 00**
438 012 20	0,12	30,4	24	1,6	46	045	63A4	**438 041 00**	**438 042 00**	**438 043 00**	**438 044 00**
438 012 25	0,12	35	20	1	40	030	63A4	**438 031 00**	**438 032 00**	**438 033 00**	**438 034 00**
438 012 30	0,12	46,7	16	1,2	30	030	63A4	**438 031 00**	**438 032 00**	**438 033 00**	**438 034 00**
438 012 35	0,12	50	16	2,4	28	045	63A4	**438 041 00**	**438 042 00**	**438 043 00**	**438 044 00**
438 012 40	0,12	70	12	1,5	20	030	63A4	**438 031 00**	**438 032 00**	**438 033 00**	**438 034 00**
438 012 45	0,12	93	10	1,9	15	030	63A4	**438 031 00**	**438 032 00**	**438 033 00**	**438 034 00**
438 012 50	0,12	140	7	2,2	10	030	63A4	**438 031 00**	**438 032 00**	**438 033 00**	**438 034 00**
438 012 55	0,12	200	5	1,5	7	030	63A4	**438 031 00**	**438 032 00**	**438 033 00**	**438 034 00**
438 018 05	0,18	9,6	86	1,4	94	063	71A6	**438 061 00**	**438 062 00**	**438 063 00**	**438 064 00**
438 018 10	0,18	14	61	0,8	100	050	63B4	**438 051 00**	**438 052 00**	**438 053 00**	**438 054 00**
438 018 15	0,18	17,5	53	1	80	050	63B4	**438 051 00**	**438 052 00**	**438 053 00**	**438 054 00**
438 018 20	0,18	20,6	48	1,2	68	050	63B4	**438 051 00**	**438 052 00**	**438 053 00**	**438 054 00**
438 018 25	0,18	30,4	33	1,2	46	045	63B4	**438 041 00**	**438 042 00**	**438 043 00**	**438 044 00**
438 018 30	0,18	37,8	29	1,4	37	045	63B4	**438 041 00**	**438 042 00**	**438 043 00**	**438 044 00**
438 018 35	0,18	50	22	1,7	28	045	63B4	**438 041 00**	**438 042 00**	**438 043 00**	**438 044 00**
438 018 40	0,18	70	16	1,1	20	030	63B4	**438 031 00**	**438 032 00**	**438 033 00**	**438 034 00**
438 018 45	0,18	100	13	2,2	14	045	63B4	**438 041 00**	**438 042 00**	**438 043 00**	**438 044 00**
438 018 50	0,18	140	10	1,6	10	030	63B4	**438 031 00**	**438 032 00**	**438 033 00**	**438 034 00**
438 018 55	0,18	200	7	2,3	7	030	63B4	**438 031 00**	**438 032 00**	**438 033 00**	**438 034 00**

*More details and further accessories see page 736.

Note for dimensioning and dimensions table see page 738.

Worm Geared Motors HMD/I

Product No. Standard Version	P kW	n_2 min^{-1}	T_2 Nm	f_B	i_{ist}	Gearbox Size	Motor Size	Accessories (order separately)* Product No. Single-Sided Output Shaft	Product No. Double-Sided Output Shaft	Product No. Foot Mounting	Product No. Output Flange
438 025 05	0,25	9,6	120	1	94	063	71B6	**438 061 00**	**438 062 00**	**438 063 00**	**438 064 00**
438 025 10	0,25	13,4	100	1,3	67	063	71B6	**438 061 00**	**438 062 00**	**438 063 00**	**438 064 00**
438 025 15	0,25	17,5	78	1,5	80	063	71A4	**438 061 00**	**438 062 00**	**438 063 00**	**438 064 00**
438 025 20	0,25	20,9	69	1,7	67	063	71A4	**438 061 00**	**438 062 00**	**438 063 00**	**438 064 00**
438 025 25	0,25	25	62	2,6	36	063	71B6	**438 061 00**	**438 062 00**	**438 063 00**	**438 064 00**
438 025 30	0,25	32,6	48	1,3	43	050	71A4	**438 051 00**	**438 052 00**	**438 053 00**	**438 054 00**
438 025 35	0,25	38,9	42	1,6	36	050	71A4	**438 051 00**	**438 052 00**	**438 053 00**	**438 054 00**
438 025 40	0,25	50	31	1,3	28	045	71A4	**438 041 00**	**438 042 00**	**438 043 00**	**438 044 00**
438 025 45	0,25	67	24	1,6	21	045	71A4	**438 041 00**	**438 042 00**	**438 043 00**	**438 044 00**
438 025 50	0,25	100	18	1,6	14	045	71A4	**438 041 00**	**438 042 00**	**438 043 00**	**438 044 00**
438 025 55	0,25	140	13	2,2	10	045	71A4	**438 041 00**	**438 042 00**	**438 043 00**	**438 044 00**
438 025 60	0,25	200	10	3	7	045	71A4	**438 041 00**	**438 042 00**	**438 043 00**	**438 044 00**
438 037 05	0,37	14,9	123	0,8	94	063	71B4	**438 061 00**	**438 062 00**	**438 063 00**	**438 064 00**
438 037 10	0,37	17,5	115	1	80	063	71B4	**438 061 00**	**438 062 00**	**438 063 00**	**438 064 00**
438 037 15	0,37	20,9	101	1,2	67	063	71B4	**438 061 00**	**438 062 00**	**438 063 00**	**438 064 00**
438 037 20	0,37	31,1	75	1,7	45	063	71B4	**438 061 00**	**438 062 00**	**438 063 00**	**438 064 00**
438 037 25	0,37	38,9	62	2,3	36	063	71B4	**438 061 00**	**438 062 00**	**438 063 00**	**438 064 00**
438 037 30	0,37	46,7	56	2,5	30	063	71B4	**438 061 00**	**438 062 00**	**438 063 00**	**438 064 00**
438 037 35	0,37	54	45	1,4	26	050	71B4	**438 051 00**	**438 052 00**	**438 053 00**	**438 054 00**
438 037 40	0,37	67	36	1,1	21	045	71B4	**438 041 00**	**438 042 00**	**438 043 00**	**438 044 00**
438 037 45	0,37	78	34	1,7	18	050	71B4	**438 051 00**	**438 052 00**	**438 053 00**	**438 054 00**
438 037 50	0,37	100	27	1,1	14	045	71B4	**438 041 00**	**438 042 00**	**438 043 00**	**438 044 00**
438 037 55	0,37	140	20	1,5	10	045	71B4	**438 041 00**	**438 042 00**	**438 043 00**	**438 044 00**
438 037 60	0,37	200	14	2,1	7	045	71B4	**438 041 00**	**438 042 00**	**438 043 00**	**438 044 00**
438 055 05	0,55	9,4	280	0,9	96	085	80B6	**438 081 00**	**438 082 00**	**438 083 00**	**438 084 00**
438 055 10	0,55	13,4	239	1,2	67	085	80B6	**438 081 00**	**438 082 00**	**438 083 00**	**438 084 00**
438 055 15	0,55	18,9	161	1,6	74	085	80A4	**438 081 00**	**438 082 00**	**438 083 00**	**438 084 00**
438 055 20	0,55	20,9	163	1,7	67	085	80A4	**438 081 00**	**438 082 00**	**438 083 00**	**438 084 00**
438 055 25	0,55	26,9	129	2,1	52	085	80A4	**438 081 00**	**438 082 00**	**438 083 00**	**438 084 00**
438 055 30	0,55	31,1	111	1,2	45	063	80A4	**438 061 00**	**438 062 00**	**438 063 00**	**438 064 00**
438 055 35	0,55	38,9	92	1,5	36	063	80A4	**438 061 00**	**438 062 00**	**438 063 00**	**438 064 00**
438 055 40	0,55	46,7	83	1,7	30	063	80A4	**438 061 00**	**438 062 00**	**438 063 00**	**438 064 00**
438 055 45	0,55	58	68	2	24	063	80A4	**438 061 00**	**438 062 00**	**438 063 00**	**438 064 00**
438 055 50	0,55	74	56	2,4	19	063	80A4	**438 061 00**	**438 062 00**	**438 063 00**	**438 064 00**
438 055 55	0,55	93	44	2,9	15	063	80A4	**438 061 00**	**438 062 00**	**438 063 00**	**438 064 00**
438 055 60	0,55	140	30	2	10	050	80A4	**438 051 00**	**438 052 00**	**438 053 00**	**438 054 00**
438 075 05	0,75	15,0	256	0,9	96	085	80B4	**438 081 00**	**438 082 00**	**438 083 00**	**438 084 00**
438 075 10	0,75	19,5	216	1,2	74	085	80B4	**438 081 00**	**438 082 00**	**438 083 00**	**438 084 00**
438 075 15	0,75	21,5	219	1,3	67	085	80B4	**438 081 00**	**438 082 00**	**438 083 00**	**438 084 00**
438 075 20	0,75	27,7	173	1,6	52	085	80B4	**438 081 00**	**438 082 00**	**438 083 00**	**438 084 00**
438 075 25	0,75	31,3	158	2,0	46	085	80B4	**438 081 00**	**438 082 00**	**438 083 00**	**438 084 00**
438 075 30	0,75	37,9	136	2,4	38	085	80B4	**438 081 00**	**438 082 00**	**438 083 00**	**438 084 00**
438 075 35	0,75	48,0	112	1,3	30	063	80B4	**438 061 00**	**438 062 00**	**438 063 00**	**438 064 00**
438 075 40	0,75	60	91	1,5	24	063	80B4	**438 061 00**	**438 062 00**	**438 063 00**	**438 064 00**
438 075 45	0,75	76	75	1,8	19	063	80B4	**438 061 00**	**438 062 00**	**438 063 00**	**438 064 00**
438 075 50	0,75	96	60	2,3	15	063	80B4	**438 061 00**	**438 062 00**	**438 063 00**	**438 064 00**
438 075 55	0,75	103	56	1,2	14	050	80B4	**438 051 00**	**438 052 00**	**438 053 00**	**438 054 00**
438 075 60	0,75	144	40	1,5	10	050	80B4	**438 051 00**	**438 052 00**	**438 053 00**	**438 054 00**
438 110 05	1,1	19,5	315	0,8	74	085	90S4	**438 081 00**	**438 082 00**	**438 083 00**	**438 084 00**
438 110 10	1,1	21,5	320	0,9	67	085	90S4	**438 081 00**	**438 082 00**	**438 083 00**	**438 084 00**
438 110 15	1,1	27,7	252	1,1	52	085	90S4	**438 081 00**	**438 082 00**	**438 083 00**	**438 084 00**
438 110 20	1,1	31,3	230	1,4	46	085	90S4	**438 081 00**	**438 082 00**	**438 083 00**	**438 084 00**
438 110 25	1,1	37,9	198	1,7	38	085	90S4	**438 081 00**	**438 082 00**	**438 083 00**	**438 084 00**
438 110 30	1,1	40,0	180	0,8	36	063	90S4	**438 061 00**	**438 062 00**	**438 063 00**	**438 064 00**
438 110 35	1,1	48,0	163	0,9	30	063	90S4	**438 061 00**	**438 062 00**	**438 063 00**	**438 064 00**
438 110 40	1,1	51	154	2,2	28	085	90S4	**438 081 00**	**438 082 00**	**438 083 00**	**438 084 00**
438 110 45	1,1	60	132	1,0	24	063	90S4	**438 061 00**	**438 062 00**	**438 063 00**	**438 064 00**
438 110 50	1,1	65	126	2,3	22	085	90S4	**438 081 00**	**438 082 00**	**438 083 00**	**438 084 00**
438 110 55	1,1	76	109	1,2	19	063	90S4	**438 061 00**	**438 062 00**	**438 063 00**	**438 064 00**
438 110 60	1,1	96	87	1,5	15	063	90S4	**438 061 00**	**438 062 00**	**438 063 00**	**438 064 00**
438 110 65	1,1	103	80	3,7	14	085	90S4	**438 081 00**	**438 082 00**	**438 083 00**	**438 084 00**
438 110 70	1,1	144	59	2,2	10	063	90S4	**438 061 00**	**438 062 00**	**438 063 00**	**438 064 00**
438 115 05	1,5	27,5	346	0,8	52	085	90LA4	**438 081 00**	**438 082 00**	**438 083 00**	**438 084 00**
438 115 10	1,5	31,1	316	1,0	46	085	90LA4	**438 081 00**	**438 082 00**	**438 083 00**	**438 084 00**
438 115 15	1,5	37,6	272	1,2	38	085	90LA4	**438 081 00**	**438 082 00**	**438 083 00**	**438 084 00**
438 115 20	1,5	51	212	1,6	28	085	90LA4	**438 081 00**	**438 082 00**	**438 083 00**	**438 084 00**
438 115 25	1,5	65	173	1,7	22	085	90LA4	**438 081 00**	**438 082 00**	**438 083 00**	**438 084 00**
438 115 30	1,5	72	159	1,8	20	085	90LA4	**438 081 00**	**438 082 00**	**438 083 00**	**438 084 00**
438 115 35	1,5	75	150	0,9	19	063	90LA4	**438 061 00**	**438 062 00**	**438 063 00**	**438 064 00**
438 115 40	1,5	95	120	1,1	15	063	90LA4	**438 061 00**	**438 062 00**	**438 063 00**	**438 064 00**
438 115 45	1,5	102	110	2,7	14	085	90LA4	**438 081 00**	**438 082 00**	**438 083 00**	**438 084 00**
438 115 50	1,5	143	82	1,6	10	063	90LA4	**438 061 00**	**438 062 00**	**438 063 00**	**438 064 00**
438 115 55	1,5	204	62	4,1	7	085	90LA4	**438 081 00**	**438 082 00**	**438 083 00**	**438 084 00**

Note for dimensioning and dimensions table see page 738.

Push-In Output Shafts HMD, Single Sided

Material: Steel.

To change the gearboxes HMD/I over from hollow shaft to solid shaft. The shaft is only pushed in and secured with the enclosed cover disc and mounting screw.



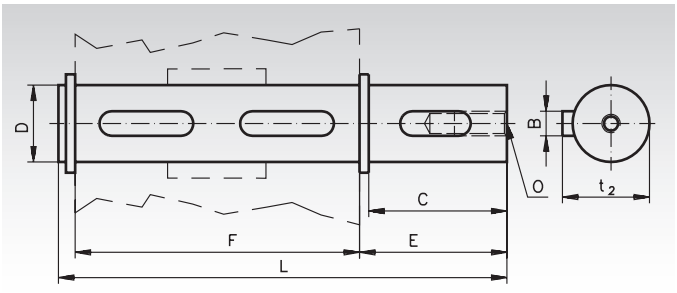

Ordering details: e.g.: Prod. No. 438 031 00, Push-In Output Shaft, Single Sided, Gearbox Size 030

Product No.	Gearbox Size	B mm	C mm	D mm	E mm	F mm	L mm	O mm	t_2 mm	Weight kg
438 031 00	030	5	25	14	35,5	55	94,5	M5x14	15,8	0,12
438 041 00	045	6	32	18	43,0	65	113,0	M6x18	20,5	0,23
438 051 00	050	8	52	25	59,5	81	146,0	M8x20	28	0,57
438 061 00	063	8	60	25	63,2	120	190,0	M8x20	28	0,73
438 081 00	085	10	60	35	73,5	135	214,5	M10x23	38	1,52

Push-In Output Shafts HMD, Double Sided

Material: Steel.

To change the gearboxes HMD/I over from hollow shaft to solid shaft. The shaft is only pushed in and secured with the enclosed cover disc and mounting screw.



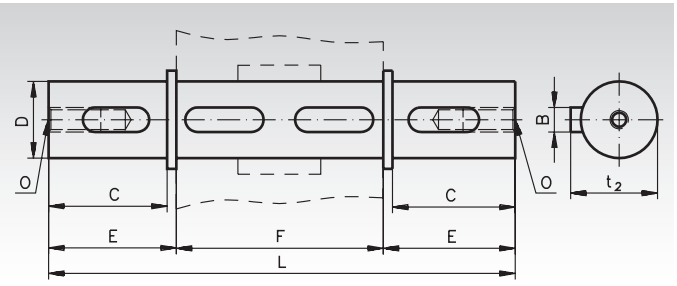

Ordering details: e.g.: Prod. No. 438 032 00, Push-In Output Shaft, Double Sided, Gearbox Size 030

Product No.	Gearbox Size	B mm	C mm	D mm	E mm	F mm	L mm	O mm	t_2 mm	Weight kg
438 032 00	030	5	25	14	35,5	55	126,0	M5x14	15,8	0,16
438 042 00	045	6	32	18	43,0	65	151,0	M6x18	20,5	0,33
438 052 00	050	8	52	25	59,5	81	200,0	M8x20	28	0,77
438 062 00	063	8	60	25	63,2	120	246,4	M8x20	28	0,93
438 082 00	085	10	60	35	73,5	135	282,0	M10x23	38	1,73

Foot Mountings HMD/I

Material: Steel sheet, zinc plated.

Retrofit kit: Foot mounting.
The position of the feet can be changed by 4x90 (Size 063: 8x 45°). 8 mounting screws are included in the delivery (4 screws per side).

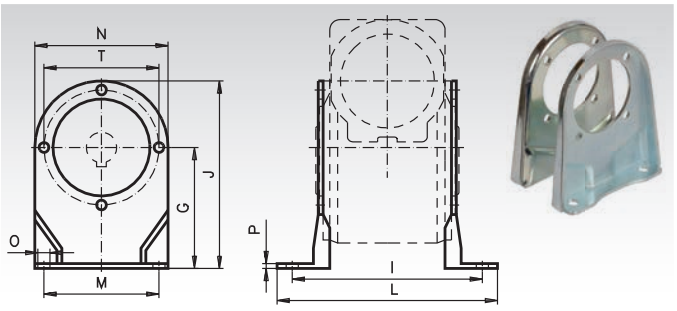

Ordering details: e.g.: Prod. No. 438 033 00, Foot Mounting, Gearbox Size 030

Product No.	Gearbox Size	G mm	I mm	J mm	L mm	M mm	N mm	O mm	P mm	T mm	Screws Size	Weight kg
438 033 00	030	55	66	94	87	50	78	6,5	3	65	M6	0,27
438 043 00	045	72	81	121	100	52	98	10,5	3	65	M6	0,49
438 053 00	050	82	98,5	138,5	123	63	113	10,5	3,5	94	M6	0,82
438 063 00	063	100	111	170	144	95	133	10,5	4	90	M8	1,23
438 083 00	085	142	145	236,5	182	140	180	10,5	5	130	M10	2,70

Output-Side Flanges HMD/I

Material: Aluminium.

Retrofit kit: Flange B5 with mounting screws.

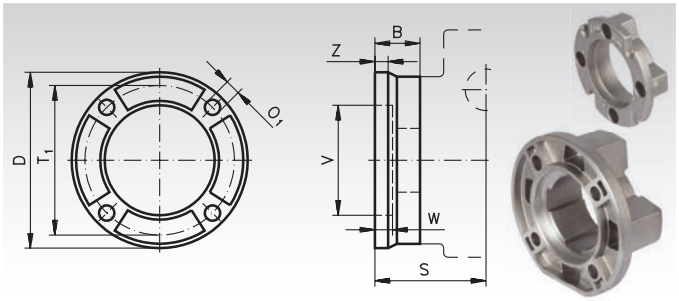

Ordering details: e.g.: Prod. No. 438 034 00, Output-Side Flange, Ø 80 mm

Product No.	Gearbox Size	D mm	B mm	O_1 mm	S mm	T_1 mm	V mm	W mm	Z mm	Screws Amount x Size	Weight kg
438 034 00	030	80	20,5	7,0	50,5	68	50	6	6	4 x M6	0,11
438 044 00	045	110	25,5	8,5	60,5	87	60	9	9	4 x M6	0,20
438 054 00	050	123	47	10,5	85,0	90	70	9	12	4 x M6	0,40
438 064 00	063	175	41	11	86,0	150	115	7	13	4 x M8	0,60
438 084 00	085	205	40	13,0	108,0	176	152	5	16	4 x M10	0,88

Torque Arms HMD/I

Material: Steel sheet, zinc plated.

Retrofit kit: Torque arm with mounting screws.
The position can be changed by 4x90° (Size 063: 8x45°).

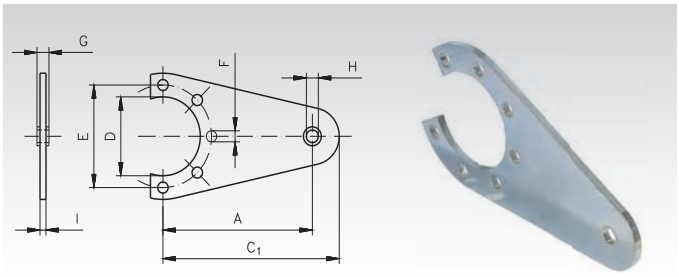

Ordering details: e.g.: Prod. No. 438 035 00, Torque Arm, Gearbox Size 030

Product No.	Gearbox Size	A mm	C_1 mm	D mm	E mm	F mm	G mm	H mm	I mm	Screws Amount x Size	Weight kg
438 035 00	030	100	118	50	65	7	4	8,2	4	4 x M6	0,21
438 045 00	045	100	113	50	65	7	4	8,2	4	4 x M6	0,21
438 055 00	050	100	118	68	94	7	4	8,2	4	4 x M6	0,26
438 065 00	063	150	180	75	90	9	20	11	6	4 x M8	0,70
438 085 00	085	200	240	110	130	11	25	21	6	4 x M10	1,44

Permissible Radial and Axial Loads

The values are calculated for the middle of the input shaft end also calculating in the output speed n_2 in min^{-1}. F_R is the max. permissible radial load for $F_A = 0$. F_A is the max. permiss. axial load for $F_R = 0$.

Gearbox Size	200 min^{-1}		150 min^{-1}		100 min^{-1}		75 min^{-1}		50 min^{-1}		25 min^{-1}		15 min^{-1}	
	F_R N	F_A N	F_R N	F_A N	F_R N	F_A N	F_R N	F_A N	F_R N	F_A N	F_R N	F_A N	F_R N	F_A N
030	600	120	700	140	800	160	900	180	1000	200	1250	250	1400	280
045	900	180	1000	200	1100	220	1200	240	1400	260	1800	300	2000	400
050	1200	240	1400	280	1500	300	1700	340	1900	380	2500	480	2800	560
063	1800	360	2000	400	2300	460	2500	500	3000	600	3800	700	4000	800
085	2500	500	2900	580	3000	600	3500	700	4000	800	5000	1000	5800	1160

Lubricant Volume in Litre (dm^3)

The gearbox is lubricated for life, using synthetic oil. At normal operating conditions, no change is required. The lubricant volume is the same for all mounting positions. The mounting positions V5 and V6 (worm shaft vertical) are however not recommended for continuous operation.

Size	030	045	050	063	085
Oil volume	0.03	0.09	0.14	0.40	1.20

Dimensions Table Worm Geared Motors HMD/I

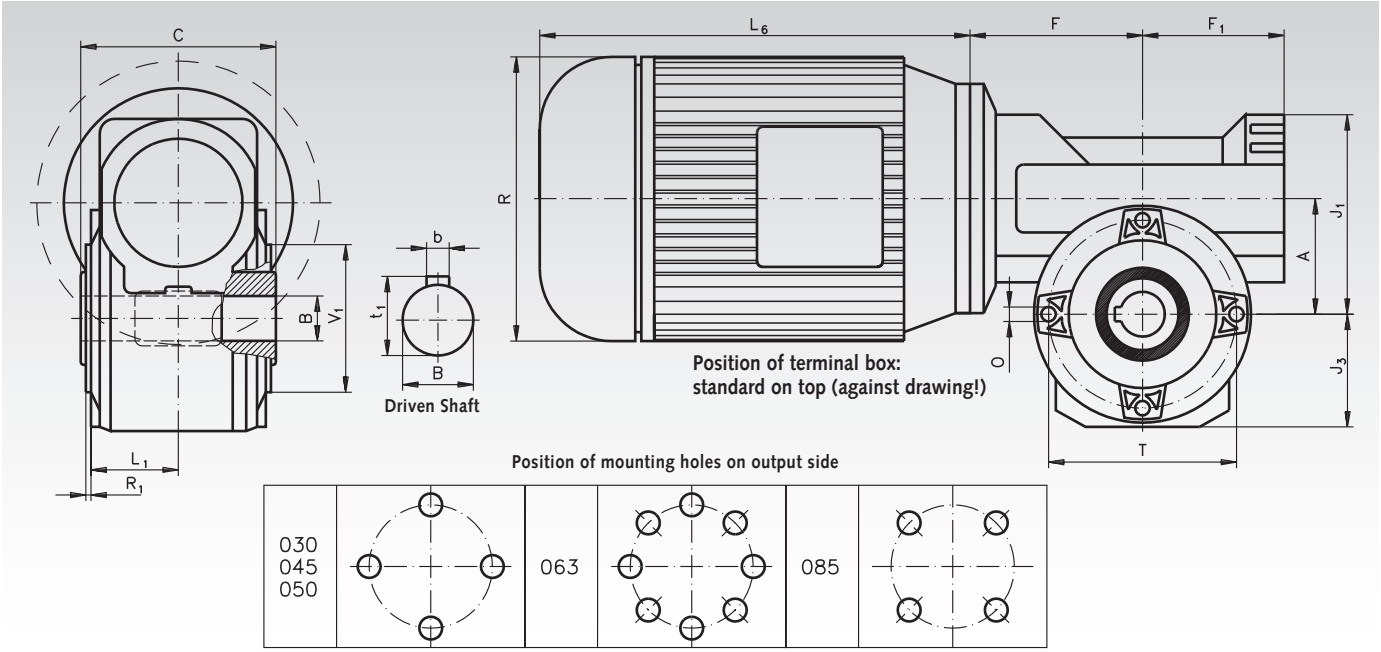

Gearbox Size	A mm	B^{H7} mm	b mm	t_1 mm	C mm	$F_{max.}$ mm	F_1 mm	J_1 mm	J_3 mm	L_1 mm	O Amount/Size	R_1 mm	T mm	V_1^{h8} mm	Weight kg
030	30	14	5	16,3	55	62,5	46	51	39	30	4/M6x9	2	65	50	1,0
045	45	18	6	20,8	65	74	55	72	49	35	4/M6x14	2	65	50	2,4
050	50	25	8	28,3	81	81,5	65	81	54,4	38	4/M6x9	3	94	68	3,0
063	63	25	8	28,3	120	99,5	79	100	70	45	8/M8x17	5	90	75	6,0
085	85	35	10	38,3	135	124	98	138	94,5	64	4/M10x18	3,5	130	110	11,0

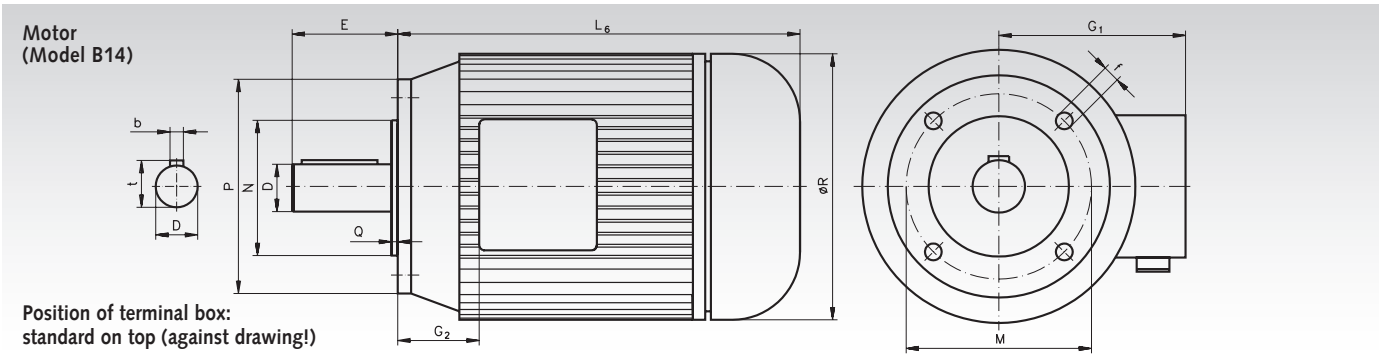

Motor Size	D mm	b mm	t mm	E mm	f mm	G_1 mm	G_2 mm	L_6 mm	M mm	N mm	P mm	Q mm	R mm	Weight kg
56B	9	3	10,2	20	M5	112	13	179	65	50	80	2,5	108	2,9
63A	11	4	12,5	23	M5	113	19	185	75	60	90	2,5	120	3,8
63B	11	4	12,5	23	M5	113	19	185	75	60	90	2,5	120	4,2
71A	14	5	16	30	M6	125	24	206	85	70	105	2,5	130	5,9
71B	14	5	16	30	M6	125	24	225	85	70	105	2,5	141	6,5
80A	19	6	21,5	40	M6	133	23	256	100	80	120	3	159	8,5
80B	19	6	21,5	40	M6	133	23	256	100	80	120	3	159	10,8
90S	24	8	27	50	M8	148	28	255	115	95	140	3	170	13,0
90L	24	8	27	50	M8	148	28	280	115	95	140	3	170	15,4

Note for Dimensioning

Three-phase motors have a very high starting torque. The max. permissible, stability related torque of the gearbox is the product of output torque and operating factor: $T_{max.} = T_2 \times f_B$

This torque must never be exceeded.

Furthermore, depending on kind of operation,

factors for shock load and acceleration must be considered.

Optionally also available with additional manual adjustment mechanism (on request).

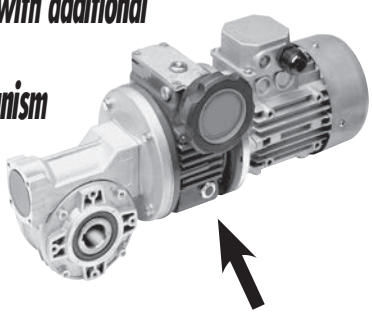

Worm Geared Motors HMD/II

Housing: Aluminium, corrosion-inhibiting coating, with mounting holes for flexible foot and flange mounting.
Worm shaft: hardened and ground.
Worm Gear: Bronze, on cast iron hub.
Lubrication: synthetic oil (lubricated for life).
Motor: Standard three-phase motor with small flange B14, 230/400V, 50Hz. **From 0.75 kW in efficiency class IE3.**
Other motor versions (AC motor, posistor, forced ventilation, brake etc.) on request.

Lightweight, high quality model range. These maintenance-free geared motors, without ventilation can be used in any mounting position. The mounting positions V5 and V6 (worm shaft vertical) are however not recommended for continuous operation.

Output shaft push-in type: The basic gearbox version has a hollow shaft. They can, however, also be supplied with a push in type output shaft (single sided, to be used left and right, or double sided). These output shafts have their own product No. and have to be ordered separately.

Variable mounting: The gearboxes are supplied with mounting holes on all sides.

Retrofittable flange: If an output-side flange mounting is required, this flange can easily be mounted by the customer.
These flanges have their own product number and have to be ordered separately (Flange type, either square or round).



Ordering Details: e.g.: Product No., Type, Motor power, Output Speed
If required: Output shaft single sided (or double sided), Product No., Gearbox Size
Output Flange, Gearbox Size, Prod.-No.
Torque Arm, Gearbox Size, Prod. No.

Product No. Standard Version	P kW	n_2 min^{-1}	T_2 Nm	f_B	i_{ist}	Gearbox Size	Motor Size	Accessories (order separately)* Product No. Single-Sided Output Shaft	Product No. Double-Sided Output Shaft	Product No. Square Output Flange	Product No. Round Output Flange
439 009 05	0,09	9	44	1,2	100	050	63A6	**438 051 00**	**438 052 00**	**439 053 00**	**439 054 00**
439 009 10	0,09	12,9	34	1,1	70	045	63A6	**438 041 00**	**438 042 00**	**439 043 00**	**439 044 00**
439 009 15	0,09	15	30	1,5	60	045	63A6	**438 041 00**	**438 042 00**	**439 043 00**	**439 044 00**
439 009 20	0,09	19,6	24	1,9	46	045	63A6	**438 041 00**	**438 042 00**	**439 043 00**	**439 044 00**
439 009 25	0,09	23	19	1	61	030	56B4	**438 031 00**	**438 032 00**	**439 033 00**	–
439 009 30	0,09	35	14	1,4	40	030	56B4	**438 031 00**	**438 032 00**	**439 033 00**	–
439 009 35	0,09	46,7	11	1,8	30	030	56B4	**438 031 00**	**438 032 00**	**439 033 00**	–
439 009 40	0,09	70	8,5	2,2	20	030	56B4	**438 031 00**	**438 032 00**	**439 033 00**	–
439 009 45	0,09	93	7	2,7	15	030	56B4	**438 031 00**	**438 032 00**	**439 033 00**	–
439 009 50	0,09	140	4,8	3,2	10	030	56B4	**438 031 00**	**438 032 00**	**439 033 00**	–
439 009 55	0,09	200	3	4,7	7	030	56B4	**438 031 00**	**438 032 00**	**439 033 00**	–
439 012 05	0,12	12,9	49	0,8	70	045	63B6	**438 041 00**	**438 042 00**	**439 043 00**	**439 044 00**
439 012 10	0,12	17,5	38	1,4	80	050	63A4	**438 051 00**	**438 052 00**	**439 053 00**	**439 054 00**
439 012 15	0,12	20,6	34	1,6	68	050	63A4	**438 051 00**	**438 052 00**	**439 053 00**	**439 054 00**
439 012 20	0,12	30,4	24	1,6	46	045	63A4	**438 041 00**	**438 042 00**	**439 043 00**	**439 044 00**
439 012 25	0,12	35,9	20	1	39	030	63A4	**438 031 00**	**438 032 00**	**439 033 00**	–
439 012 30	0,12	46,7	16	1,2	30	030	63A4	**438 031 00**	**438 032 00**	**439 033 00**	–
439 012 35	0,12	50	16	2,4	28	045	63A4	**438 041 00**	**438 042 00**	**439 043 00**	**439 044 00**
439 012 40	0,12	74	12	1,5	19	030	63A4	**438 031 00**	**438 032 00**	**439 033 00**	–
439 012 45	0,12	93	10	1,9	15	030	63A4	**438 031 00**	**438 032 00**	**439 033 00**	–
439 012 50	0,12	132	7	2,2	10,6	030	63A4	**438 031 00**	**438 032 00**	**439 033 00**	–
439 012 55	0,12	200	5	1,5	7	030	63A4	**438 031 00**	**438 032 00**	**439 033 00**	–
439 018 05	0,18	9,6	86	1,4	94	063	71A6	**438 061 00**	**438 062 00**	**439 063 00**	**439 064 00**
439 018 10	0,18	14	61	0,8	100	050	63B4	**438 051 00**	**438 052 00**	**439 053 00**	**439 054 00**
439 018 15	0,18	17,5	53	1	80	050	63B4	**438 051 00**	**438 052 00**	**439 053 00**	**439 054 00**
439 018 20	0,18	20,6	48	1,2	68	050	63B4	**438 051 00**	**438 052 00**	**439 053 00**	**439 054 00**
439 018 25	0,18	30,4	33	1,2	46	045	63B4	**438 041 00**	**438 042 00**	**439 043 00**	**439 044 00**
439 018 30	0,18	37,8	29	1,4	37	045	63B4	**438 041 00**	**438 042 00**	**439 043 00**	**439 044 00**
439 018 35	0,18	50	22	1,7	28	045	63B4	**438 041 00**	**438 042 00**	**439 043 00**	**439 044 00**
439 018 40	0,18	74	16	1,1	19	030	63B4	**438 031 00**	**438 032 00**	**439 033 00**	–
439 018 45	0,18	100	13	2,2	14	045	63B4	**438 041 00**	**438 042 00**	**439 043 00**	**439 044 00**
439 018 50	0,18	132	10	1,6	10,6	030	63B4	**438 031 00**	**438 032 00**	**439 033 00**	–
439 018 55	0,18	200	7	2,3	7	030	63B4	**438 031 00**	**438 032 00**	**439 033 00**	–

*More details and further accessories see page 741.

Note for dimensioning see page 741. Dimensions table see page 743.

Optionally also available with additional manual adjustment mechanism (on request).

Worm Geared Motors HMD/II

Product No. Standard Version	P kW	n_2 min^{-1}	T_2 Nm	f_B	i_{ist}	Gearbox Size	Motor Size	Accessories (order separately)* Product No. Single-Sided Output Shaft	Product No. Double-Sided Output Shaft	Product No. Square Output Flange	Product No. Round Output Flange
439 025 05	0,25	9,6	120	1	94	063	71B6	**438 061 00**	**438 062 00**	**439 063 00**	**439 064 00**
439 025 10	0,25	13,4	100	1,3	67	063	71B6	**438 061 00**	**438 062 00**	**439 063 00**	**439 064 00**
439 025 15	0,25	17,5	78	1,5	80	063	71A4	**438 061 00**	**438 062 00**	**439 063 00**	**439 064 00**
439 025 20	0,25	20,9	69	1,7	67	063	71A4	**438 061 00**	**438 062 00**	**439 063 00**	**439 064 00**
439 025 25	0,25	25	62	2,6	36	063	71B6	**438 061 00**	**438 062 00**	**439 063 00**	**439 064 00**
439 025 30	0,25	32,6	48	1,3	43	050	71A4	**438 051 00**	**438 052 00**	**439 053 00**	**439 054 00**
439 025 35	0,25	38,9	42	1,6	36	050	71A4	**438 051 00**	**438 052 00**	**439 053 00**	**439 054 00**
439 025 40	0,25	50	31	1,3	28	045	71A4	**438 041 00**	**438 042 00**	**439 043 00**	**439 044 00**
439 025 45	0,25	67	24	1,6	21	045	71A4	**438 041 00**	**438 042 00**	**439 043 00**	**439 044 00**
439 025 50	0,25	100	18	1,6	14	045	71A4	**438 041 00**	**438 042 00**	**439 043 00**	**439 044 00**
439 025 55	0,25	140	13	2,2	10	045	71A4	**438 041 00**	**438 042 00**	**439 043 00**	**439 044 00**
439 025 60	0,25	200	10	3	7	045	71A4	**438 041 00**	**438 042 00**	**439 043 00**	**439 044 00**
439 037 05	0,37	14,9	123	0,8	94	063	71B4	**438 061 00**	**438 062 00**	**439 063 00**	**439 064 00**
439 037 10	0,37	17,5	115	1	80	063	71B4	**438 061 00**	**438 062 00**	**439 063 00**	**439 064 00**
439 037 15	0,37	20,9	101	1,2	67	063	71B4	**438 061 00**	**438 062 00**	**439 063 00**	**439 064 00**
439 037 20	0,37	31,1	75	1,7	45	063	71B4	**438 061 00**	**438 062 00**	**439 063 00**	**439 064 00**
439 037 25	0,37	38,9	62	2,3	36	063	71B4	**438 061 00**	**438 062 00**	**439 063 00**	**439 064 00**
439 037 30	0,37	46,7	56	2,5	30	063	71B4	**438 061 00**	**438 062 00**	**439 063 00**	**439 064 00**
439 037 35	0,37	54	45	1,4	26	050	71B4	**438 051 00**	**438 052 00**	**439 053 00**	**439 054 00**
439 037 40	0,37	67	36	1,1	21	045	71B4	**438 041 00**	**438 042 00**	**439 043 00**	**439 044 00**
439 037 45	0,37	78	34	1,7	18	050	71B4	**438 051 00**	**438 052 00**	**439 053 00**	**439 054 00**
439 037 50	0,37	100	27	1,1	14	045	71B4	**438 041 00**	**438 042 00**	**439 043 00**	**439 044 00**
439 037 55	0,37	140	20	1,5	10	045	71B4	**438 041 00**	**438 042 00**	**439 043 00**	**439 044 00**
439 037 60	0,37	200	14	2,1	7	045	71B4	**438 041 00**	**438 042 00**	**439 043 00**	**439 044 00**
439 055 05	0,55	9,4	280	0,9	96	085	80B6	**438 081 00**	**438 082 00**	–	**439 084 00**
439 055 10	0,55	13,4	239	1,2	67	085	80B6	**438 081 00**	**438 082 00**	–	**439 084 00**
439 055 15	0,55	18,9	161	1,6	74	085	80A4	**438 081 00**	**438 082 00**	–	**439 084 00**
439 055 20	0,55	20,9	163	1,7	67	085	80A4	**438 081 00**	**438 082 00**	–	**439 084 00**
439 055 25	0,55	26,9	129	2,1	52	085	80A4	**438 081 00**	**438 082 00**	–	**439 084 00**
439 055 30	0,55	31,1	111	1,2	45	063	80A4	**438 061 00**	**438 062 00**	**439 063 00**	**439 064 00**
439 055 35	0,55	38,9	92	1,5	36	063	80A4	**438 061 00**	**438 062 00**	**439 063 00**	**439 064 00**
439 055 40	0,55	46,7	83	1,7	30	063	80A4	**438 061 00**	**438 062 00**	**439 063 00**	**439 064 00**
439 055 45	0,55	58	68	2	24	063	80A4	**438 061 00**	**438 062 00**	**439 063 00**	**439 064 00**
439 055 50	0,55	74	56	2,4	19	063	80A4	**438 061 00**	**438 062 00**	**439 063 00**	**439 064 00**
439 055 55	0,55	93	44	2,9	15	063	80A4	**438 061 00**	**438 062 00**	**439 063 00**	**439 064 00**
439 055 60	0,55	140	30	2	10	050	80A4	**438 051 00**	**438 052 00**	**439 053 00**	**439 054 00**
439 075 05	0,75	15,0	256	0,9	96	085	80B4	**438 081 00**	**438 082 00**	–	**439 084 00**
439 075 10	0,75	19,5	216	1,2	74	085	80B4	**438 081 00**	**438 082 00**	–	**439 084 00**
439 075 15	0,75	21,5	219	1,3	67	085	80B4	**438 081 00**	**438 082 00**	–	**439 084 00**
439 075 20	0,75	27,7	173	1,6	52	085	80B4	**438 081 00**	**438 082 00**	–	**439 084 00**
439 075 25	0,75	31,3	158	2,0	46	085	80B4	**438 081 00**	**438 082 00**	–	**439 084 00**
439 075 30	0,75	37,9	136	2,4	38	085	80B4	**438 081 00**	**438 082 00**	–	**439 084 00**
439 075 35	0,75	48,0	112	1,3	30	063	80B4	**438 061 00**	**438 062 00**	**439 063 00**	**439 064 00**
439 075 40	0,75	60	91	1,5	24	063	80B4	**438 061 00**	**438 062 00**	**439 063 00**	**439 064 00**
439 075 45	0,75	76	75	1,8	19	063	80B4	**438 061 00**	**438 062 00**	**439 063 00**	**439 064 00**
439 075 50	0,75	96	60	2,3	15	063	80B4	**438 061 00**	**438 062 00**	**439 063 00**	**439 064 00**
439 075 55	0,75	103	56	1,2	14	050	80B4	**438 051 00**	**438 052 00**	**439 053 00**	**439 054 00**
439 075 60	0,75	144	40	1,5	10	050	80B4	**438 051 00**	**438 052 00**	**439 053 00**	**439 054 00**
439 110 05	1,1	19,5	315	0,8	74	085	90S4	**438 081 00**	**438 082 00**	–	**439 084 00**
439 110 10	1,1	21,5	320	0,9	67	085	90S4	**438 081 00**	**438 082 00**	–	**439 084 00**
439 110 15	1,1	27,7	252	1,1	52	085	90S4	**438 081 00**	**438 082 00**	–	**439 084 00**
439 110 20	1,1	31,3	230	1,4	46	085	90S4	**438 081 00**	**438 082 00**	–	**439 084 00**
439 110 25	1,1	37,9	198	1,7	38	085	90S4	**438 081 00**	**438 082 00**	–	**439 084 00**
439 110 30	1,1	40,0	180	0,8	36	063	90S4	**438 061 00**	**438 062 00**	**439 063 00**	**439 064 00**
439 110 35	1,1	48,0	163	0,9	30	063	90S4	**438 061 00**	**438 062 00**	**439 063 00**	**439 064 00**
439 110 40	1,1	51	154	2,2	28	085	90S4	**438 081 00**	**438 082 00**	–	**439 084 00**
439 110 45	1,1	60	132	1,0	24	063	90S4	**438 061 00**	**438 062 00**	**439 063 00**	**439 064 00**
439 110 50	1,1	65	126	2,3	22	085	90S4	**438 081 00**	**438 082 00**	–	**439 084 00**
439 110 55	1,1	76	109	1,2	19	063	90S4	**438 061 00**	**438 062 00**	**439 063 00**	**439 064 00**
439 110 60	1,1	96	87	1,5	15	063	90S4	**438 061 00**	**438 062 00**	**439 063 00**	**439 064 00**
439 110 65	1,1	103	80	3,7	14	085	90S4	**438 081 00**	**438 082 00**	–	**439 084 00**
439 110 70	1,1	144	59	2,2	10	063	90S4	**438 061 00**	**438 062 00**	**439 063 00**	**439 064 00**
439 150 05	1,5	27,5	346	0,8	52	085	90LA4	**438 081 00**	**438 082 00**	–	**439 084 00**
439 150 10	1,5	31,1	316	1,0	46	085	90LA4	**438 081 00**	**438 082 00**	–	**439 084 00**
439 150 15	1,5	37,6	272	1,2	38	085	90LA4	**438 081 00**	**438 082 00**	–	**439 084 00**
439 150 20	1,5	51	212	1,6	28	085	90LA4	**438 081 00**	**438 082 00**	–	**439 084 00**
439 150 25	1,5	65	173	1,7	22	085	90LA4	**438 081 00**	**438 082 00**	–	**439 084 00**
439 150 30	1,5	72	159	1,8	20	085	90LA4	**438 081 00**	**438 082 00**	–	**439 084 00**
439 150 35	1,5	75	150	0,9	19	063	90LA4	**438 061 00**	**438 062 00**	**439 063 00**	**439 064 00**
439 150 40	1,5	95	120	1,1	15	063	90LA4	**438 061 00**	**438 062 00**	**439 063 00**	**439 064 00**
439 150 45	1,5	102	110	2,7	14	085	90LA4	**438 081 00**	**438 082 00**	–	**439 084 00**
439 150 50	1,5	143	82	1,6	10	063	90LA4	**438 061 00**	**438 062 00**	**439 063 00**	**439 064 00**

Note for dimensioning see page 741. Dimensions table see page 743.

Push-In Output Shafts HMD, Single Sided

Material: Steel.

To change the gearboxes HMD/II over from hollow shaft to solid shaft. The shaft is only pushed in and secured with the enclosed cover disc and mounting screw.



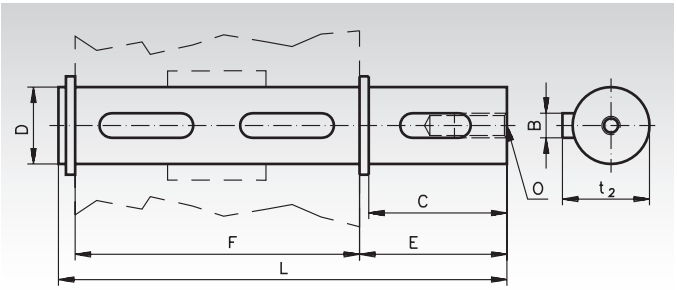

Ordering Details: e.g.: Product No. 438 031 00, Push-In Output Shaft, Single Sided, Gearbox Size 030

Product No.	Gearbox Size	B mm	C mm	D mm	E mm	F mm	L mm	O mm	t_2 mm	Weight kg
438 031 00	030	5	25	14	35,5	55	94,5	M5x14	15,8	0,12
438 041 00	045	6	32	18	43,0	65	113,0	M6x18	20,5	0,23
438 051 00	050	8	52	25	59,5	81	146,0	M8x20	28	0,57
438 061 00	063	8	60	25	63,2	120	190,0	M8x20	28	0,73
438 081 00	085	10	60	35	73,5	135	214,5	M10x23	38	1,52

Push-In Output Shafts HMD, Double Sided

Material: Steel.

To change the gearboxes HMD/II over from hollow shaft to solid shaft on both sides. The shaft is only pushed in and secured with the enclosed circlip.



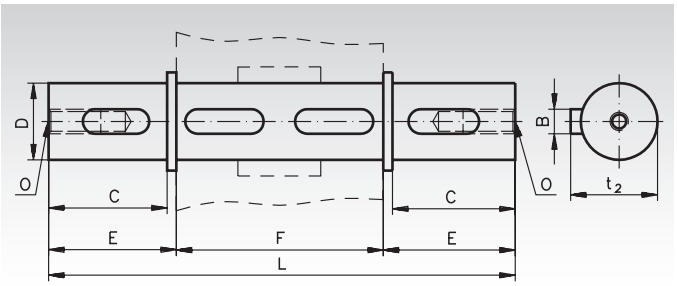

Ordering Details: e.g.: Product No. 438 032 00, Push-In Output Shaft, Double Sided, Gearbox Size 030

Product No.	Gearbox Size	B mm	C mm	D mm	E mm	F mm	L mm	O mm	t_2 mm	Weight kg
438 032 00	030	5	25	14	35,5	55	126,0	M5x14	15,8	0,16
438 042 00	045	6	32	18	43,0	65	151,0	M6x18	20,5	0,33
438 052 00	050	8	52	25	59,5	81	200,0	M8x20	28	0,77
438 062 00	063	8	60	25	63,2	120	246,4	M8x20	28	0,93
438 082 00	085	10	60	35	73,5	135	282,0	M10x23	38	1,73

Permissible Radial and Axial Loads

The values are calculated for the middle of the input shaft end as a function of the output speed n_2 in rpm. F_R is the max. permissible radial load for $F_A = 0$. F_A is the max. permissible axial load for $F_R = 0$.

Gearbox Size	200 min^{-1}		150 min^{-1}		100 min^{-1}		75 min^{-1}		50 min^{-1}		25 min^{-1}		15 min^{-1}	
	F_R N	F_A N	F_R N	F_A N	F_R N	F_A N	F_R N	F_A N	F_R N	F_A N	F_R N	F_A N	F_R N	F_A N
030	600	120	700	140	800	160	900	180	1000	200	1250	250	1400	280
045	900	180	1000	200	1100	220	1200	240	1400	260	1800	300	2000	400
050	1200	240	1400	280	1500	300	1700	340	1900	380	2500	480	2800	560
063	1800	360	2000	400	2300	460	2500	500	3000	600	3800	700	4000	800
085	2500	500	2900	580	3000	600	3500	700	4000	800	5000	1000	5800	1160

Lubricant Volume in Litre (dm³)

The gearbox is lubricated for life, using synthetic oil. At normal operating conditions no change is required. The lubricant volume is the same for all mounting positions.
The mounting positions V5 and V6 (worm shaft vertical) are however not recommended for continuous operation.

Size	030	045	050	063	085
Oil volume	0.03	0.09	0.14	0.30	1.20

Note for Dimensioning

Three-phase motors have a very high starting torque. The max. permissible, stability related torque of the gearbox is the product of output torque and operating factor: $T_{max.} = T_2 \times f_B$

This torque must never be exceeded.

Furthermore, depending on kind of operation,

factors for shock load and acceleration must be considered.

Output-side Flanges HMD/II, square

Material: Aluminium.
Square flange with fixing screws for retrofitting.



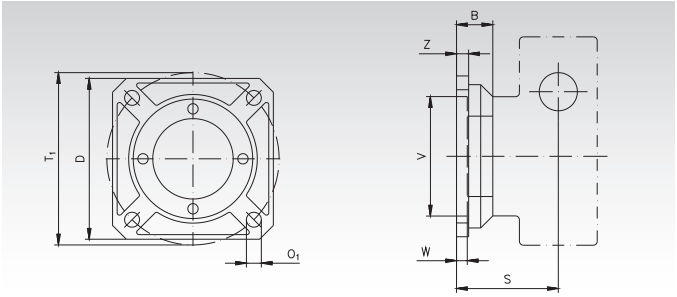

Ordering Details: e.g.: Product No. 439 033 00, Output-Side Flange, 70 x 70 mm

Product No.	Gearbox Size	D mm	B mm	O1 mm	S mm	T1 mm	V mm	W mm	Z mm	Screws Amount x size	Weight kg
439 033 00	030	70	25,5	6,5	54,5	68	50	4	6	4 x M6	0,11
439 043 00	045	95	30,5	9	67	75	60	4	7	4 x M6	0,20
439 053 00	050	110	46,5	11	90	85	70	5	9	4 x M8	0,40
439 063 00	063	142	33,0	11	86	150	115	6	12	4 x M8	0,60

Output-side Flanges HMD/II, round

Material: Aluminium.
Round flange with fixing screws for retrofitting.



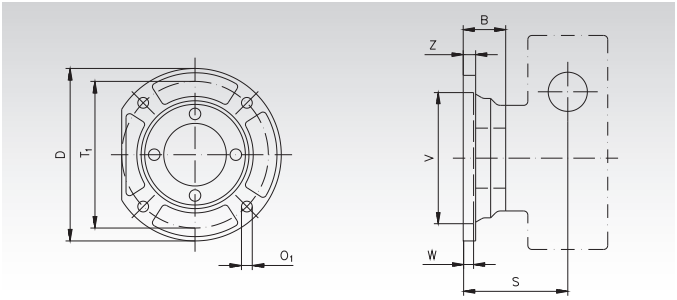

Ordering Details: e.g.: Product No. 439 044 00, Output-Side Flange, Ø 140 mm.

Product No.	Gearbox Size	D mm	B mm	O_1 mm	S mm	T_1 mm	V mm	W mm	Z mm	Screws Amount x Size	Weight kg
439 044 00	045	140	43,5	9,5	80	115	95	5	9	4 x M6	0,20
439 054 00	050	160	45,5	9,5	89	130	110	5	10	4 x M8	0,40
439 064 00	063	200	57,0	13,0	110	165	130	7	13	4 x M8	0,60
439 084 00	085	200	53,5	11,5	117,5	165	130	5	13	4 x M10	0,88

Torque Arms HMD/II

Material: Steel sheet, zinc plated.
Torque arm with mounting screws for retrofitting.
The position can be changed in steps of 90°.



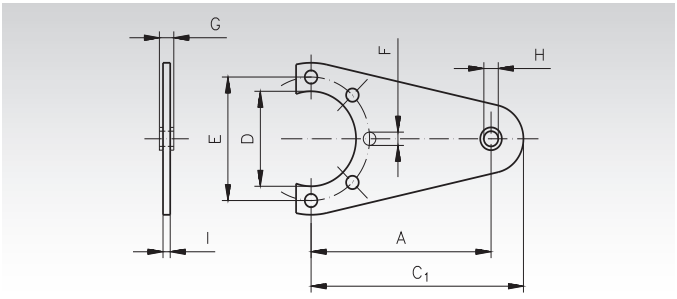

Ordering Details: e.g.: Product No. 439 035 00, Torque Arm, Gearbox Size 030

Product No.	Gearbox Size	A mm	C_1 mm	D mm	E mm	F mm	G mm	H mm	I mm	Screws Amount x Size	Weight kg
439 035 00	030	85	100	55	65	7	14	8	4	3 x M6	0,21
439 045 00	045	100	118	60	75	7	14	10	4	3 x M6	0,21
439 055 00	050	100	118	70	85	9	14	10	4	3 x M8	0,26
439 065 00	063	150	180	75	90	9	20	11	6	3 x M8	0,70
439 085 00	085	200	240	110	130	11	25	21	6	3 x M10	1,44

Dimensions Table Worm Geared Motors HMD/II

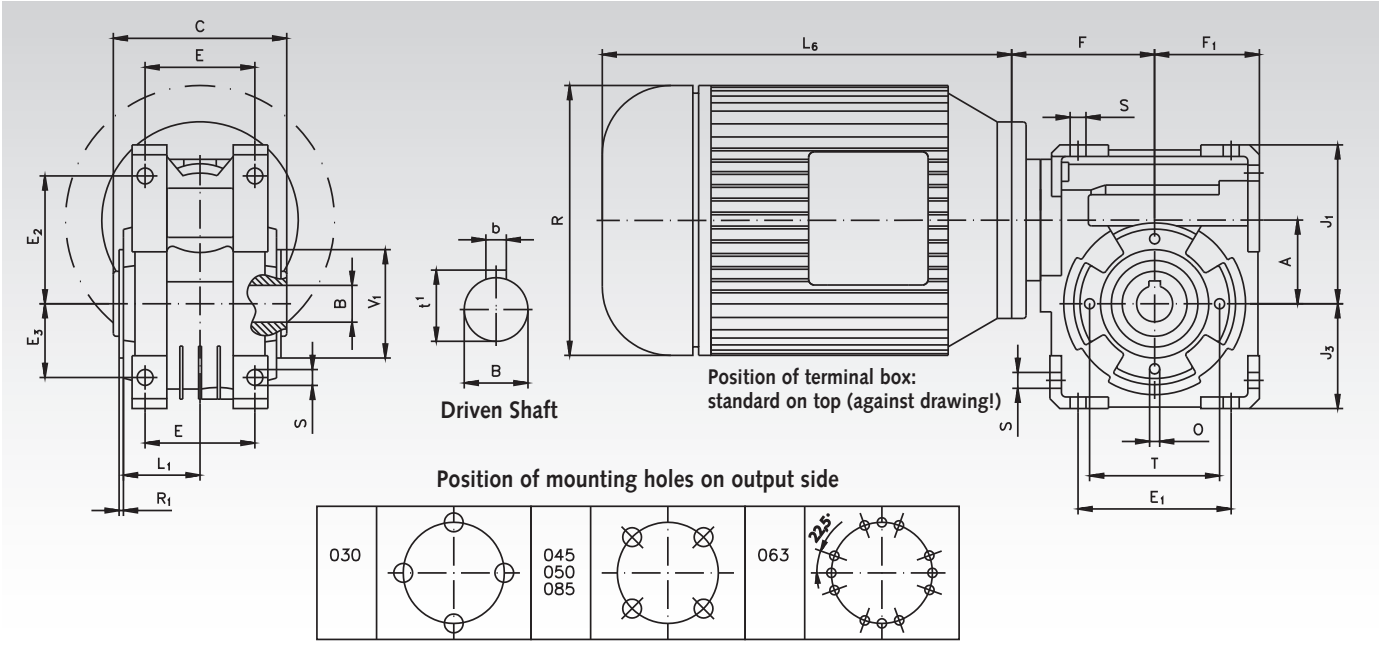

Gearbox Size	A mm	B^{H7} mm	b mm	t_1 mm	C mm	$F_{max.}$ mm	F_1 mm	J_1 mm	J_3 mm	L_1 mm	R_1 mm	V_1^{h8} mm	Weight kg
030	30	14	5	16,3	55	62,5	40	57	40	29	2,5	55	1,2
045	45	18	6	20,8	65	80	50	71,5	50	36,5	2,5	60	2,3
050	50	25	8	28,3	81	79	60	84	60	43,5	2,5	70	3,3
063	63	25	8	28,3	120	99,5	72,5	110	72,5	53	3,0	75	6,0
085	85	35	10	38,3	135	124	100	145,5	100	64	3,5	110	12

Mounting Holes

Gearbox-Size	E mm	E_1 mm	E_2 mm	E_3 mm	S mm	T mm	O Amount + Size
030	44	54	44	27	6,5	65	4xM6x11
045	60	70	55	35	6,5	75	4xM6x12
050	70	80	64	40	8,5	85	4xM8x11
063	76	102	88,5	51	9,5	90	12xM8x14
085	101	144	117,5	72	11	130	4xM10x17

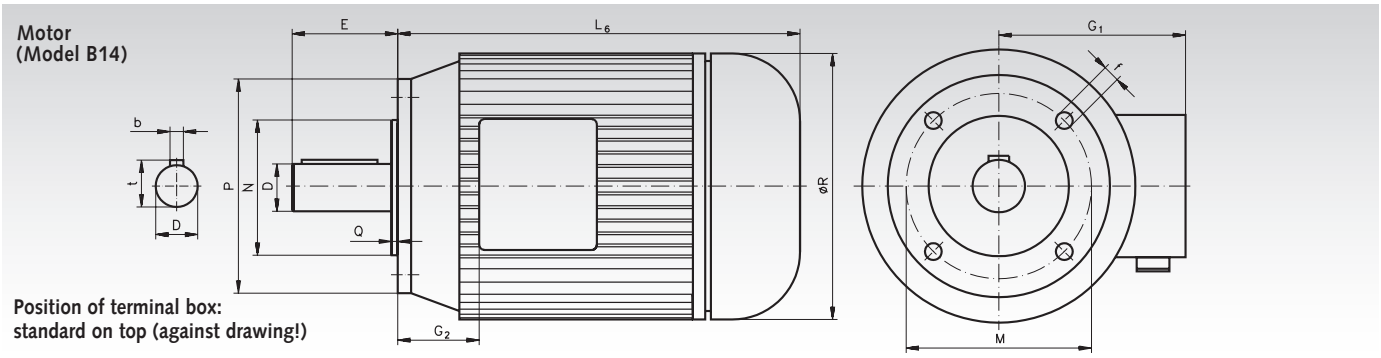

Motor Size	D mm	b mm	t mm	E mm	f mm	G_1 mm	G_2 mm	L_6 mm	M mm	N mm	P mm	Q mm	R mm	Weight kg
56B	9	3	10,2	20	M5	112	13	179	65	50	80	2,5	108	2,9
63A	11	4	12,5	23	M5	113	19	185	75	60	90	2,5	120	3,8
63B	11	4	12,5	23	M5	113	19	185	75	60	90	2,5	120	4,2
71A	14	5	16	30	M6	125	24	206	85	70	105	2,5	130	5,9
71B	14	5	16	30	M6	125	24	225	85	70	105	2,5	141	6,5
80A	19	6	21,5	40	M6	133	23	256	100	80	120	3	159	8,5
80B	19	6	21,5	40	M6	133	23	256	100	80	120	3	159	10,8
90S	24	8	27	50	M8	148	28	255	115	95	140	3	170	13,0
90L	24	8	27	50	M8	148	28	280	115	95	140	3	170	15,4

Worm Geared Motors ZMD/I

General data: Versatile, high-performance gearboxes.
4 sizes, centre distance 40, 50, 63 and 80 mm. Centre distance 100 - 315 mm available on request.

Housing: High-quality grey cast iron, all sides machined and with mounting holes on 4 sides.

Gearing: 12 ratios from 5 to 83 : 1; worm shaft hardened and ground. Worm gear made from special centrifugally cast bronze.

Efficiency factor: The efficiency factors stated in the selection tables are guideline values for properly run-in and lubricated gearboxes at operating temperature with nominal load and driving worm shaft. Proper running in is a crucial factor influencing the lifetime of the gearbox. The starting efficiency factor (η_A) is, as the operating efficiency factor (h), depending on the lead angle.

Self-locking: Self-locking only occurs in worm gear units, when the unit cannot be driven from the output side. Worms with 4 and 6 threads sometimes permit transmission ratios for gearing up (i = 5 : 1 to 13,3 : 1). If a gearbox must be implicitly self-locking, or must implicitly not be self-locking, we urge you to contact us.

Bearing system: All gearbox shafts with generously dimensioned roller bearings.

Lubrication: The gearboxes are lubricated for life using synthetic oil. Under normal operating conditions, no maintenance is required. The housing should be checked for leakages at an interval of approx. 2 years.

Ventilation: Size (centre distance) 40 is supplied without ventilation. With the other gearboxes, the seal plug has to be exchanged with the separately packed venting filter.

Motor: From 0.75 kW in efficiency class IE3. Datas page 748.

Version A with output-side shaft right, on request also on the left or double sided (without picture).

Version HL with output-side hollow shaft.



Position of terminal box: standard on top.
Output flange and foot mounting available at extra charge.

Weights

Gearbox Size	kg	Motor	kg
40	7	**63 S/L**	5 / 6
50	12	**71 S/L**	7 / 8
63	18	**80 S/L**	10 / 11
80	28	**90 S/L**	18 / 22

Venting Filter (VF)

Size	A mm	B mm	C mm	D mm	E mm	F mm
40	-	-	-	-	-	-
50	50	20	33	22	58	25
63	62,5	27,5	37	22	67	25
80	77,5	32,5	57	22	82	25

Lubricant Volume in Litre (dm³)

Size	Mounting Position 1	2	3 + 4	5 + 6
40	0,20	0,25	0,20	0,20
50	0,30	0,60	0,45	0,45
63	0,50	1,10	0,70	0,80
80	0,90	2,10	1,40	1,60

The standard lubrication volume is calculated for mounting position 2. For other mounting positions and high permanent speeds it might have to be reduced, to prevent oil leakages.

Position of Oil Fittings Gearbox Size 50 - 80

Mounting Position 1

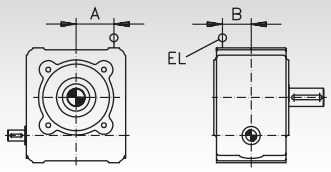

Mounting Position 2

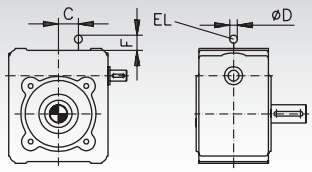

Mounting Position 3

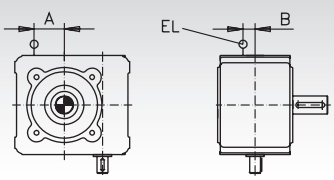

Mounting Position 4

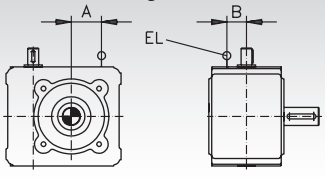

Mounting Position 5

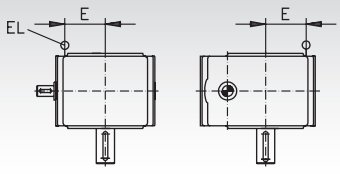

Mounting Position 6

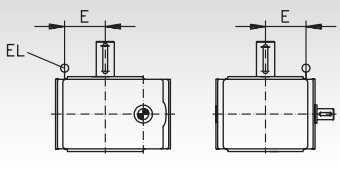

Mounting Sides

The worm gear units can be mounted in any position and the shaft ends can be positioned to your order.

Sizes 40 - 80

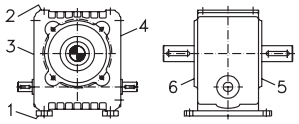

Worm Geared Motors ZMD/I, Technical Data (Other Power Settings and Output Speeds On Request)

Version A Output Side 5 Product No.	Version HL Product No.	P_1 kW	n_2 min^{-1}	$T_{2nom.}$ Nm	f_B	T_{2A} Nm	i_{ist}	Gearbox Size	Motor Size
437 510 13	**437 010 13**	0,12	13,4	46	1,08	53	63	**40**	63L/6
437 510 16	**437 010 16**	0,12	16,3	37	1,04	54	82	**40**	63S/4
437 510 21	**437 010 21**	0,12	21,2	31	1,59	41	63	**40**	63S/4
437 510 29	**437 010 29**	0,12	29,1	27	2,17	31	29	**40**	63L/6
437 510 34	**437 010 34**	0,12	34,2	23	2,51	34	39	**40**	63S/4
437 510 43	**437 010 43**	0,12	43,3	21	2,41	29	19,5	**40**	63L/6
437 510 46	**437 010 46**	0,12	46,0	18	2,9	25	29	**40**	63S/4
437 510 51	**437 010 51**	0,12	51,4	17	2,32	30	26	**40**	63S/4
437 510 65	**437 010 65**	0,12	65,0	15	2,66	23	13	**40**	63L/6
437 520 14	**437 020 14**	0,18	14,3	71	1,55	64	62	**50**	71S/6
437 520 22	**437 020 22**	0,18	22,7	50	1,29	53	39	**40**	71S/6
437 520 25	**437 020 25**	0,18	25,3	44	1,14	65	52	**40**	63S/2
437 520 33	**437 020 33**	0,18	33,1	29	1,31	38	82	**40**	63S/2
437 520 34	**437 020 34**	0,18	34,7	39	2,07	46	25,5	**50**	71S/6
437 520 45	**437 020 45**	0,18	45,4	30	1,67	35	19,5	**40**	71S/6
437 520 51	**437 020 51**	0,18	51,4	26	1,52	43	26	**40**	63L/4
437 520 67	**437 020 67**	0,18	67,4	21	2,41	32	19,5	**40**	63L/4
437 521 01	**437 021 01**	0,18	101,2	15	2,06	26	13	**40**	63L/4
437 530 14	**437 030 14**	0,25	14,4	98	1,12	92	62	**50**	71L/6
437 530 17	**437 030 17**	0,25	17,5	89	1,00	101	51	**50**	71L/6
437 530 22	**437 030 22**	0,25	22,8	77	2,78	77	39	**50**	71L/6
437 530 26	**437 030 26**	0,25	26,8	61	1,39	78	51	**50**	71S/4
437 530 33	**437 030 33**	0,25	33,1	40	0,95	60	82	**40**	63L/2
437 530 35	**437 030 35**	0,25	35,0	48	1,22	60	39	**40**	71S/4
437 530 45	**437 030 45**	0,25	45,6	41	1,21	51	19,5	**40**	71L/6
437 530 52	**437 030 52**	0,25	52,5	35	1,13	53	26	**40**	71S/4
437 530 70	**437 030 70**	0,25	70,0	28	1,8	40	19,5	**40**	71S/4
437 531 05	**437 031 05**	0,25	105,0	20	1,53	32	13	**40**	71S/4
437 540 14	**437 040 14**	0,37	14,8	152	1,37	143	61	**63**	80S/6
437 540 17	**437 040 17**	0,37	17,0	152	1,89	165	53	**80**	80S/6
437 540 22	**437 040 22**	0,37	22,0	108	1,69	93	61	**63**	71L/4
437 540 26	**437 040 26**	0,37	26,3	99	1,96	103	51	**63**	71L/4
437 540 33	**437 040 33**	0,37	33,4	70	2,0	77	82	**63**	71S/2
437 540 35	**437 040 35**	0,37	35,3	74	1,66	77	38	**50**	71L/4
437 540 46	**437 040 46**	0,37	46,2	61	2,65	59	29	**63**	71L/4
437 540 52	**437 040 52**	0,37	52,6	54	1,42	69	25,5	**50**	71L/4
437 540 70	**437 040 70**	0,37	70,3	36	1,26	49	39	**40**	71S/2
437 540 92	**437 040 92**	0,37	92,4	32	1,57	39	14,5	**40**	71L/4
437 541 05	**437 041 05**	0,37	105,4	27	1,49	43	26	**40**	71S/2
437 541 37	**437 041 37**	0,37	137,4	23	1,75	32	9,75	**40**	71L/4
437 542 10	**437 042 10**	0,37	210,8	15	2,04	26	13	**40**	71S/2
437 550 14	**437 050 14**	0,55	14,4	245	1,37	217	62	**80**	80L/6
437 550 17	**437 050 17**	0,55	17,6	210	0,97	236	51	**63**	80L/6
437 550 22	**437 050 22**	0,55	22,0	161	1,14	138	61	**63**	80S/4
437 550 26	**437 050 26**	0,55	26,3	147	1,32	153	51	**63**	80S/4
437 550 33	**437 050 33**	0,55	33,7	104	1,35	127	82	**63**	71L/2
437 550 35	**437 050 35**	0,55	35,3	110	1,12	114	38	**50**	80S/4
437 550 45	**437 050 45**	0,55	45,9	97	2,21	120	19,5	**63**	80L/6
437 550 52	**437 050 52**	0,55	52,6	81	0,96	102	25,5	**50**	80S/4
437 550 72	**437 050 72**	0,55	72,6	55	1,54	78	38	**50**	71L/2
437 550 92	**437 050 92**	0,55	92,4	49	2,24	58	14,5	**50**	80S/4
437 551 05	**437 051 05**	0,55	105,1	44	1,36	61	12,75	**50**	80S/4
437 551 41	**437 051 41**	0,55	141,5	31	1,41	53	19,5	**40**	71L/2
437 552 16	**437 052 16**	0,55	216,5	22	2,54	42	12,75	**50**	71L/2
437 560 14	**437 060 14**	0,75	15,2	328	1,22	352	62	**80**	90S/6
437 560 21	**437 060 21**	0,75	23,4	221	1,52	279	62	**80**	80L/4
437 560 26	**437 060 26**	0,75	28,4	187	1,02	304	51	**63**	80L/4
437 560 34	**437 060 34**	0,75	37,2	151	1,46	243	39	**63**	80L/4
437 560 44	**437 060 44**	0,75	48,3	123	2,53	191	30	**80**	80L/4
437 560 53	**437 060 53**	0,75	55,9	102	1,74	149	51	**63**	80S/2
437 560 71	**437 060 71**	0,75	75,0	76	1,50	111	38	**50**	80S/2
437 560 92	**437 060 92**	0,75	100,0	64	3,25	119	14,5	**63**	80L/4
437 561 05	**437 061 05**	0,75	113,7	56	1,07	120	12,75	**50**	80L/4
437 561 41	**437 061 41**	0,75	152,6	43	2,13	89	9,5	**50**	80L/4
437 562 14	**437 062 14**	0,75	223,5	29	1,89	59	12,75	**50**	80S/2

Dimensions table page 747.

Worm Geared Motors ZMD/I, Technical Data (Other Power Settings and Output Speeds On Request)

Version A Output Side 5 Product No.	Version HL Product No.	P_1 kW	n_2 min^{-1}	$T_{2\ nom.}$ Nm	f_B	T_{2A} Nm	i_{ist}	Gearbox Size	Motor Size
437 570 29	**437 070 29**	1,10	31,3	269	1,38	364	30	**80**	90L/6
437 570 33	**437 070 33**	1,10	35,5	250	1,04	409	26,5	**80**	90L/6
437 570 44	**437 070 44**	1,10	47,0	195	2,17	309	20	**80**	90L/6
437 570 52	**437 070 52**	1,10	54,3	168	1,46	342	26,5	**80**	90S/4
437 570 71	**437 070 71**	1,10	73,9	125	1,77	256	19,5	**63**	90S/4
437 570 92	**437 070 92**	1,10	96,0	100	3,19	200	15	**80**	90S/4
437 571 08	**437 071 08**	1,10	112,9	86	1,58	192	12,75	**63**	90S/4
437 572 78	**437 072 78**	1,10	303,7	32	2,74	73	9,5	**50**	80L/2
437 580 34	**437 080 34**	1,50	36,1	327	1,08	497	40	**80**	90L/4
437 580 46	**437 080 46**	1,50	48,2	252	1,24	389	30	**80**	90L/4
437 580 52	**437 080 52**	1,50	54,5	230	1,07	436	26,5	**80**	90L/4
437 580 69	**437 080 69**	1,50	72,3	180	2,00	329	20	**80**	90L/4
437 581 40	**437 081 40**	1,50	145,5	90	2,98	161	20	**80**	90S/2

Dimensions table page 747.

Note for Dimensioning

Three-phase motors have a very high starting torque T_{2A}.
The max. permissible, stability related torque of the gearbox is the product of output torque and operating factor: $\mathbf{T_{max.} = T_{2\ nom.} \times f_B}$

This torque must never be exceeded.

Furthermore, depending on kind of operation,

factors for shock load and acceleration must be considered.

Permissible Radial Loads F_R [N] for Normal Output Shaft and Bearing System

The values for permissible radial loads stated in the table are calculated for the centre of the output shaft end, also calculating in the output speed and nominal output torque. The values were calculated for the most unfavourable load direction.

The permiss. radial loads only apply to unilateral load. If in your application high radial loads occur in combination with axial loads, we ask you to contact us.

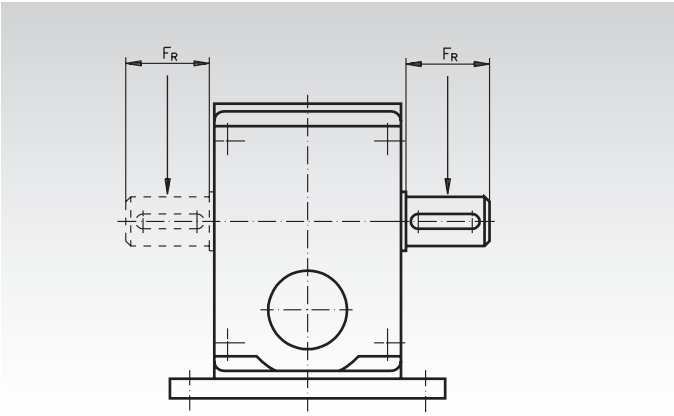

Gearbox Size	Output Torque Nm	Permiss. Radial Load [N] at Output Speeds n_2 [min^{-1}]																	
		6	8	10	12	16	20	25	32	40	50	63	80	100	125	160	200	250	320
40	0 - 80	2500	2375	2250	2125	2000	1875	1775	1675	1575	1400	1325	1250	1175	1125	1050	925	875	800
50	0 - 125	3500	3325	3150	2970	2800	2620	2480	2340	2200	1960	1850	1750	1640	1570	1470	1290	1220	1120
	125 - 160	3200	3040	2880	2720	2560	2400	2270	2140	2010	1790	1700	1600	1500	1440	1340	1180	1120	1020
63	0 - 200	5000	4750	4500	4250	4000	3750	3550	3350	3150	2800	2650	2500	2350	2250	2100	1850	1750	1600
	200 - 250	4600	4360	4140	3910	3680	3450	3260	3080	2900	2570	2440	2300	2160	2070	1930	1700	1610	1470
	250 - 320	3500	3325	3150	2975	2800	2625	2485	2345	2205	1960	1855	1750	1645	1575	1470	1295	1225	1120
80	0 - 500	7500	7120	6740	6370	6000	5620	5320	5000	4700	4200	4000	3750	3500	3370	3140	2770	2620	2400

Dimensions Table Worm Geared Motors ZMD/I

Output flange and foot mounting brackets can be delivered at extra charge.

Position of terminal box: standard on top.

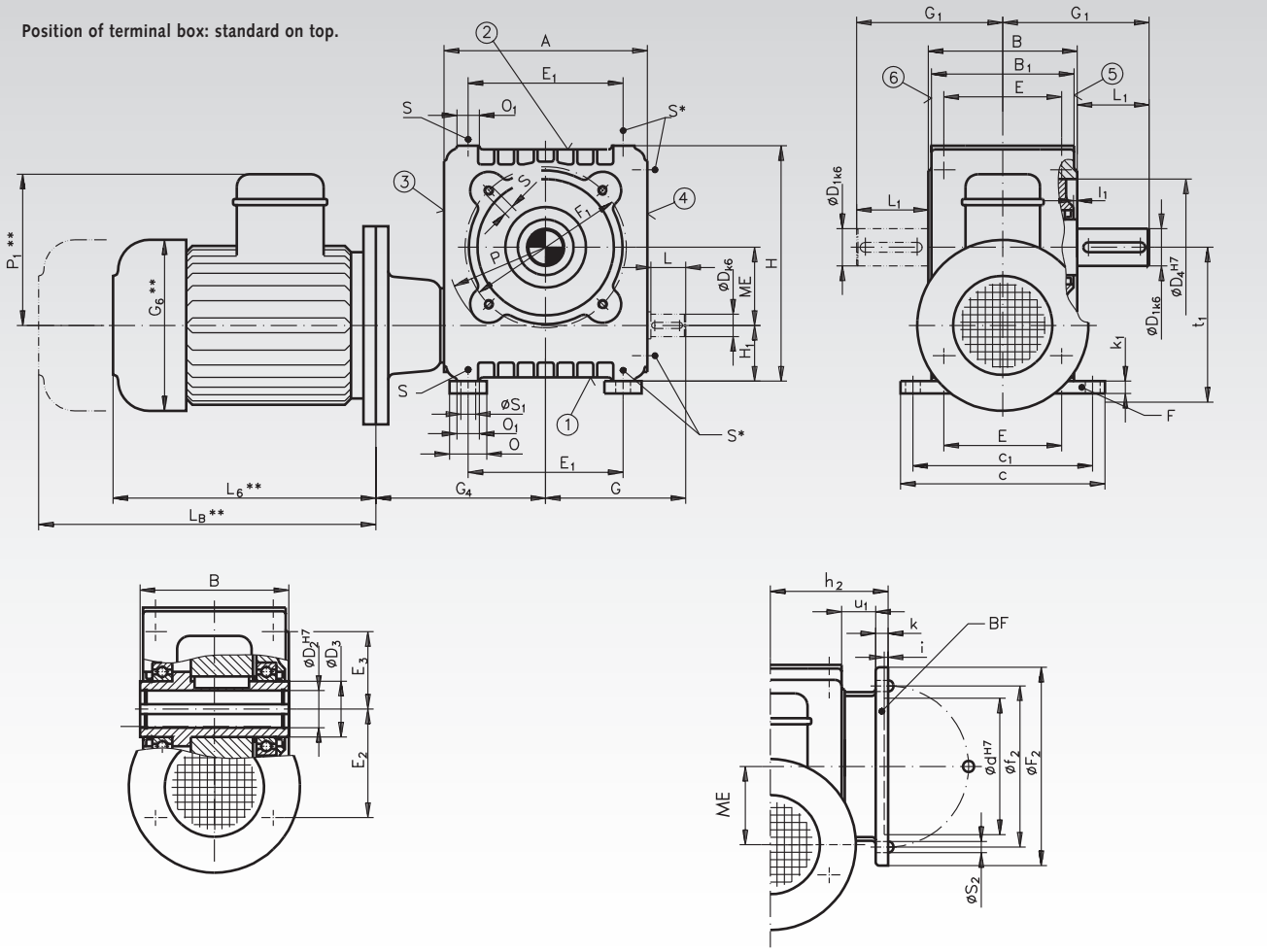

With Hollow Shaft

Flange Version

Surfaces (1) to (6) are all machined. Aapart from side (3), they can serve as mounting surfaces. The foot mountings F can be attached to surfaces (1), (2) and (4). Surfaces (5) and (6) serve to attach the flange BF. The geared motor can turn in any position. The required mounting position has to be stated in the order. Feather keys and grooves according to DIN 6885/1. Shaft ends with thread alignment according to DIN 332/2 see page 820. As standard, the terminal box is mounted on side (2). It can be turned by 4x90°. On request, side (4) can accommodate the shaft end. The speed of this shaft end is equal to the speed of the motor.

Gearbox – Dimensions

Gearbox Size	ME mm	A mm	B mm	B_1 mm	c mm	c_1 mm	d mm	D_4 mm	D x L mm	D_1 x L_1 mm	D_2 mm	D_3 mm	E mm	E_1 mm	E_2 mm	E_3 mm	P mm	F_2 mm
40	40	104	90	85	125	110	80	70	14 x 24	22 x 36	22	35	70	70	55	35	53	116
50	50	140	105	100	150	130	95	90	16 x 28	25 x 42	25	40	80	100	70	50	65	136
63	63	164	120	115	165	145	110	110	18 x 28	30 x 58	30	45	95	125	87,5	62,5	80	160
80	80	204	140	135	190	165	130	140	24 x 36	38 x 58	38	55	115	155	107,5	77,5	100	200

Gearbox Size	F_1 mm	f_2 mm	G mm	G_1 mm	G_4 mm	H_1 mm	h_2 mm	H mm	i mm	l mm	k mm	k_1 mm	O mm	O_1 mm	S* mm	S_1 mm	S_2 mm	t_1 mm	u_1 mm
40	85	100	79	81	89	32	70	124	3	3	8	8	25	14	M6 x 12	10	7	80	17
50	110	115	100	94,5	118	40	80	160	3	3	8	10	30	18	M8 x 14	12	9	100	19,5
63	130	130	113	118	137	45	95	190	3	3	10	10	30	18	M8 x 14	12	9	118	25
80	165	165	141	128	164	55	110	237	3,5	3	12	12	35	22	M10 x 17	15	11	147	28

* Threaded bores on side 4 at extra charge.

Dimensions Table Worm Geared Motors ZMD/I

Motor – Dimensions (mm)

Gearbox Size	Motor Size	G_6*	L_6*	L_B*	P_1*
40	**63 S/L**	123	188	238	113
40	**71 S/L**	138	212	272	122
50	**71 S/L**	138	212	272	122
50	**80 S/L**	156	234	299	141
63	**71 S/L**	138	212	272	122
63	**80 S/L**	156	234	299	141
63	**90 S**	176	251	311	149
63	**90 L**	176	276	356	149
80	**80 S/L**	156	234	299	141
80	**90 S**	176	251	311	149
80	**90 L**	176	276	356	149

* Dimensions may be subject to change.

Three-Phase Motors

The following single-phase motors conform to DIN IEC 34-1.
From 0.75 kW in efficiency class IE3.
Other types (dual-speed, one-phase AC, brake motors) on request. The nominal power is calculated for continuous operation, operation mode S1, at nominal voltage and nominal speed calculated for a max. temperature of the cooling agent of 40°C and an altitude of 1,000 m above sea level.
The motors are supplied with a normal voltage of 230/400 V (permiss. voltage fluctuation +6% and -10%). Other voltages and frequencies available on request.

Size	Nominal Power kW	Nominal Speed min^{-1}	Nominal Current at 230/400 V A	Power Factor cos φ	Nominal Torque Nm	Starting Torque to nom. Torque M_A/M_N	Starting Current to nom. Current I_A/I_N
			3000 min^{-1}				
63S/2	0,18	2710	0,97/0,56	0,79	0,63	2,4	3,5
63L/2	0,25	2715	1,22/0,77	0,82	0,86	2,5	3,8
71S/2	0,37	2740	1,72/0,99	0,84	1,26	2,2	3,9
71L/2	0,55	2745	2,46/1,42	0,83	1,9	2,4	4,2
80S/2	0,75	2850	2,75/1,56	0,86	2,5	2,6	6,2
80L/2	1,1	2885	3,95/2,25	0,85	3,6	3,0	7,1
90S/2	1,5	2910	5,20/3,00	0,86	4,9	2,7	8,1
			1500 min^{-1}				
63S/4	0,12	1335	0,9/0,52	0,64	0,84	2,3	2,5
63L/4	0,18	1315	1,3/0,75	0,67	1,26	2,2	2,5
71S/4	0,25	1365	1,4/0,83	0,72	1,7	2,0	3,1
71L/4	0,37	1340	1,9/1,11	0,76	2,5	1,8	3,1
80S/4	0,55	1340	2,8/1,6	0,77	3,8	1,75	3,1
80L/4	0,75	1450	3,05/1,75	0,75	4,9	2,7	7,1
90S/4	1,1	1440	4,25/2,40	0,78	7,3	2,9	6,9
90L/4	1,5	1445	5,60/3,15	0,80	10,0	2,7	7,2
			1000 min^{-1}				
63L/6	0,12	845	1,1/0,6	0,65	1,29	1,9	1,9
71S/6	0,18	885	1,3/0,75	0,68	1,94	1,6	2,4
71L/6	0,25	890	1,6/0,95	0,69	2,58	1,7	2,6
80S/6	0,37	900	2,1/1,2	0,71	3,84	1,8	3,1
80L/6	0,55	895	2,85/1,65	0,74	5,71	1,8	3,2
90S/6	0,75	945	3,45/1,96	0,70	7,6	2,2	4,6
90L/6	1,1	940	4,95/2,85	0,69	11,0	2,3	4,6

Please use our website

at www.maedler.de

Put in a search word or part number and go directly to the product page

Find the PDF-catalogue page and further information

Manual instructions, certificates, safety data sheets in the section Downloads

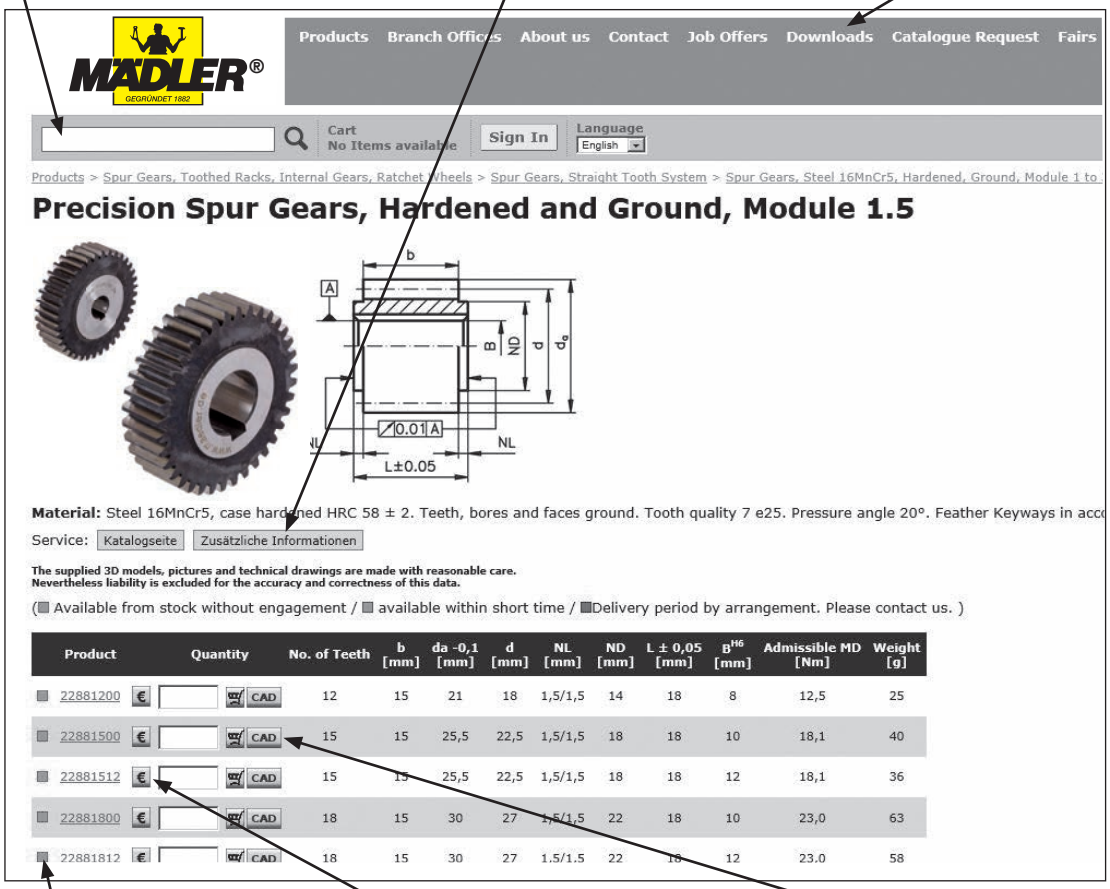

The availability of all products is shown by coloured sign

Drag the mouse onto the currency-symbol to see the prices*

Download CAD-drawings in 3D

A lot of possibilities and information:

- **Download of PDF catalogues in different languages.**
- **See all our branches and distributors.**
- **Make easily your order online and follow your parcel.**
- ***MÄDLER*®-Tools: Use our selection- and calculation tools.**
- **News: Useful information about exhibitions and others.**
- **Newsletter: Monthly information per e-mail.**

* Prices and terms of delivery depend on the country.

Rolling bearings at MÄDLER®:



Ball bearings, open



Ball bearings, 2Z



Ball bearings, 2RS

SKF®

The premium brand
- for the sophisiticated application

MÄDLER® GEGRÜNDET 1882

The reliable brand
- the inexpensive option



Angular contact ball bearings



Self aligning ball bearings



Cylindrical roller bearings



Spherical roller bearings



Tapered roller bearings

The rolling bearings are to find:

- *in this catalog page 416*
- *on the internet at www.maedler.de*

Hinges at MÄDLER®:



on the internet at www.maedler.de

Come and visit our booth at a fair and get detailed information on our entire product range. Exact dates at: www.maedler.de



Continuously Variable Geared Motors MUN/I

- Motor 230/400 V, 50 Hz.
- Input power 0,18 kW.
- Output torque to 70 Nm.
- Output speed 0.17 to 4200 min^{-1}
- Adjustment range 1 : 9.
- Adjustable with motor stopped.
- Constant speed, smooth running, long life time and high efficiency.
- Lubricated for life, thus maintenance free.
- Can be mounted in any position (apart from Size 250 and 260).

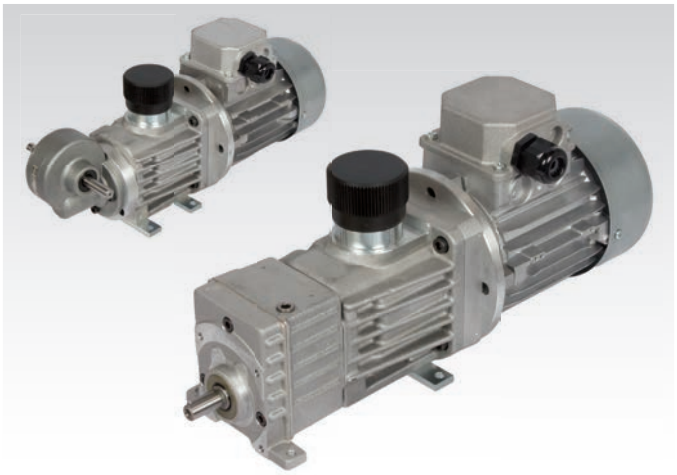

Working Principle

Two axially-parallel hollow-cone disks are mounted, with pre-tension, around a steel ball. The ball rolls, at almost punctiform point of contact, over the hollow-cone disks and transfers the power from the input shaft - maintaining the sense of rotation - onto the output shaft. The system works at both rotational directions. A slidable ball track on the control device continuously changes the transmission ratio between input and output shaft. This allows a adjustment range from 3 : 1 to 1 : 3, i.e. a total value of R = 9. The adjustment of the speed is done with an adjustment screw. To pass through the entire adjustment range 10 full turns are required.

Attachments for the Input Side

Attached Motor
The input is done by a B14 standard motor. As standard, 4-pole, three-phase motors, three-phase explosion proof or one-phase AC motors are used. The motor dimensions stated in the dimensions tables refer to three-phase standard motors.
Attention
When three-phase explosion proof or one-phase AC motors are used, the overall dimensions change. Please ask for the respective dimensions tables!

Attachments for the Output Side

To adjust the output speeds to the specific circumstances the following can be mounted:
- Helical gear unit, 1 to 7 stage.
- Helical and, on request, bevel gear units.
- Worm gear units.

Standard Adjustment Device

To pass through the entire adjustment range 10 full turns of the handwheel are required. The adjusting collar is marked with a linear scale of 1 - 10, which is however not directly connected to the output speed, as the adjustment graph shows an almost logarithmic curve progression.

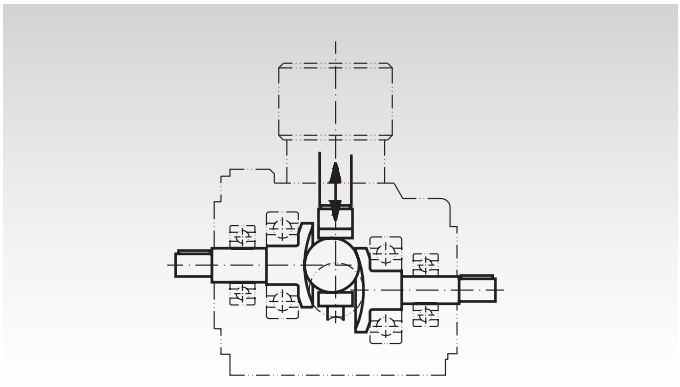

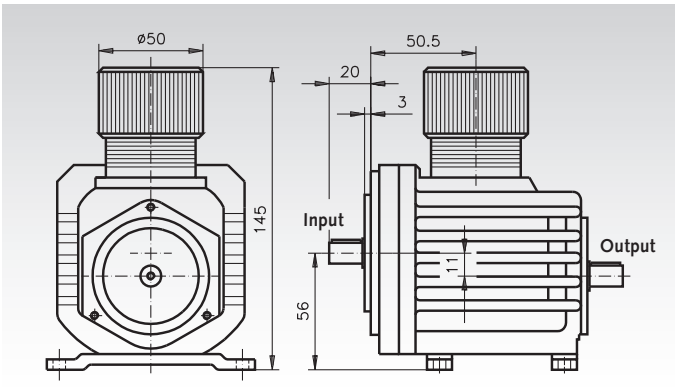

Version B: Input Power 0,18 kW, Variable Range 1 : 9



Ordering details: z. B.:
Type, Version, Output Speed, Product No.

Product No.	Output Speeds n_2 at n_1 = 1400 min^{-1} min^{-1}	Output Torque M_2 Nm	Size	Gear Ratio i	Dimensional Drawing	Weight kg
450 202 00	155 - 1400	2,5 - 0,75	21	3	2	6,8
450 202 01	92 - 824	4,3 - 1,3	21	5,1	2	6,8
450 202 02	71 - 640	5,6 - 1,7	21	6,6	2	6,8
450 203 00	58 - 522	6,6 - 2,0	22	8,0	3	7,3
450 203 01	34 - 306	11,2 - 3,3	22	13,7	3	7,3
450 203 02	26 - 234	14,6 - 4,3	22	17,8	3	7,3
450 206 00	22 - 194	17,2 - 5,1	239	21,6	4	7,8
450 205 00	16,5 - 149	*10 - 6,7	24	28	5	6,7
450 206 01	12,6 - 113	29 - 8,5	239	37	4	7,8
450 205 02	10,8 - 97	*10 - *10	24	43	5	6,7
450 206 02	9,7 - 87	*30 - 11,5	239	48	4	7,8
450 205 03	9 - 81	*10 - *10	24	51,3	5	6,7
450 207 01	4,7 - 42	*30 - 23	249	100	4	7,8
450 207 02	3,5 - 31	*30 - *30	249	130	4	7,8
450 209 00	3 - 27	*30 - *30	259	158	4	7,9
450 213 01	1,7 - 15	*70 - 64	250	272	6	9,5
450 213 02	1,3 - 12	*70 - *70	250	353	6	9,5
450 212 01	0,63 - 5,7	*70 - *70	260	735	6	9,7
450 214 00	0,48 - 4,3	*30 - *30	269	955	4	7,9
450 215 00	0,46 - 4,16	*10 - *10	27	1006	5	6,8
450 215 01	0,30 - 2,7	*10 - *10	27	1540	5	6,8
450 215 02	0,17 - 1,5	*10 - *10	27	2806	5	6,8

*Constructive speed limit of the tranmission gearing. Dimensional drawings page 755.

Version E: Input Power 0,18 kW, Variable Range 1 : 9 with Worm Gear Units



Ordering details: z. B.:
Type, Version, Output Speed, Product No.

Product No.	Output Speeds n_2 at n_1 = 1400 min^{-1} min^{-1}	Output Torque M_2 Nm	Size	Gear Ratio i	Dimensional Drawing	Weight kg
450 501 00	92 - 830	2,9 - 0,87	2S1	5	9	6,7
450 501 01	67 - 600	4,1 - 1,2	2S1	7	9	6,7
450 501 02	47 - 420	5,4 - 1,6	2S1	10	9	6,7
450 501 04	31 - 280	8,1 - 2,4	2S1	15	9	6,7
450 501 05	26 - 233	8,1 - 2,4	2S1	18	9	6,7
450 501 06	19 - 174	*9,2 - 2,9	2S1	24	9	6,7
450 501 08	15 - 135	*10,3 - 3,2	2S1	30	9	6,7
450 501 09	12 - 108	*11,4 - 4,1	2S1	38	9	6,7
450 501 10	8,5 - 76	*10,4 - 4,5	2S1	55	9	6,7
450 501 12	6,2 - 56	*7,3 - 5,1	2S1	75	9	6,7

*Constructive speed limit of the tranmission gearing. Dimensional drawings page 755.

Model B3, Feather Key according to DIN 6885/1 (all Dimensions in mm)

Dimens. No. 2

Size 21

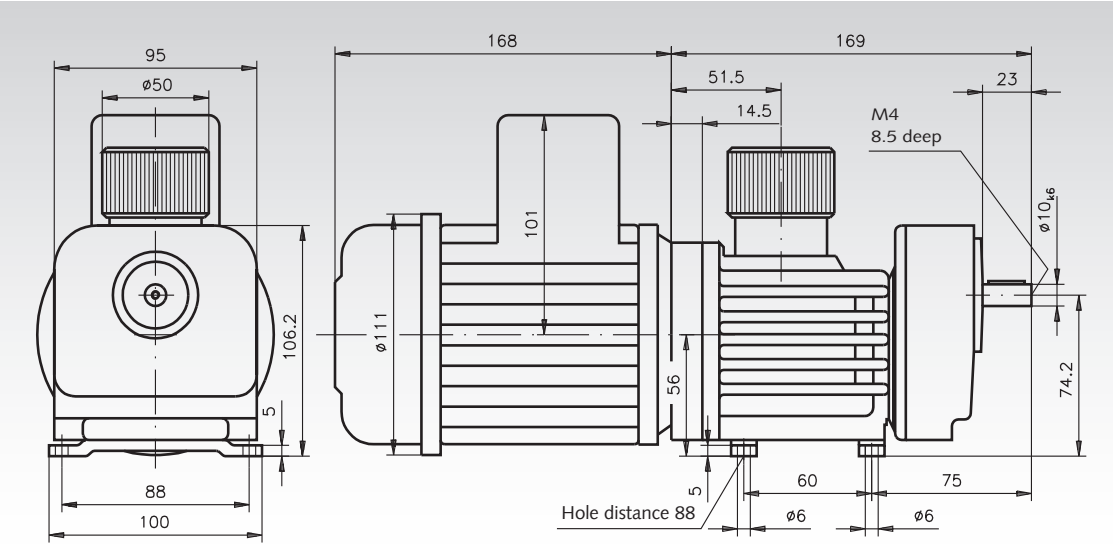

Dimens. No. 3

Size 22

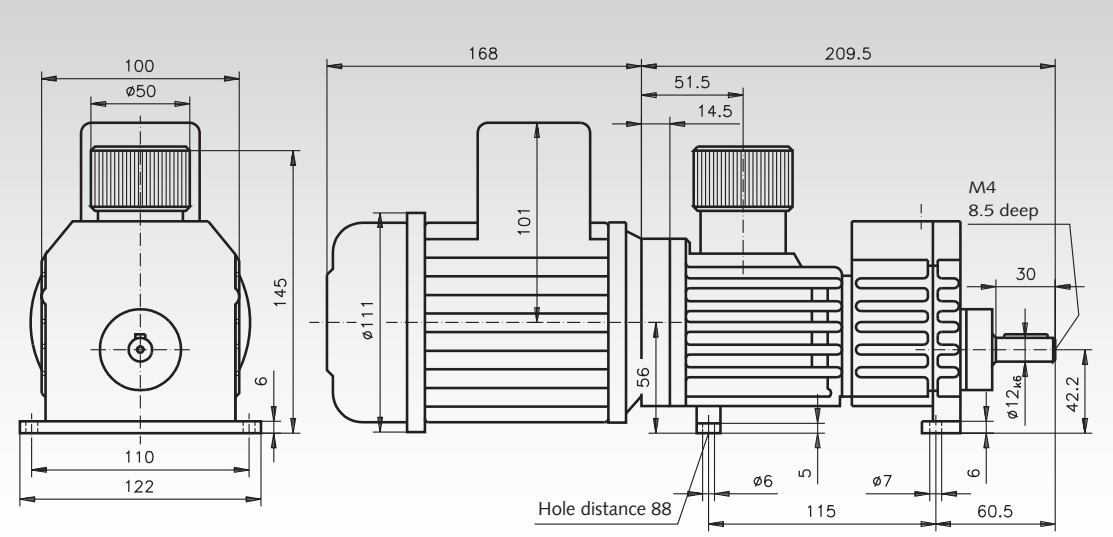

Dimens. No. 4

Size 239 - 269

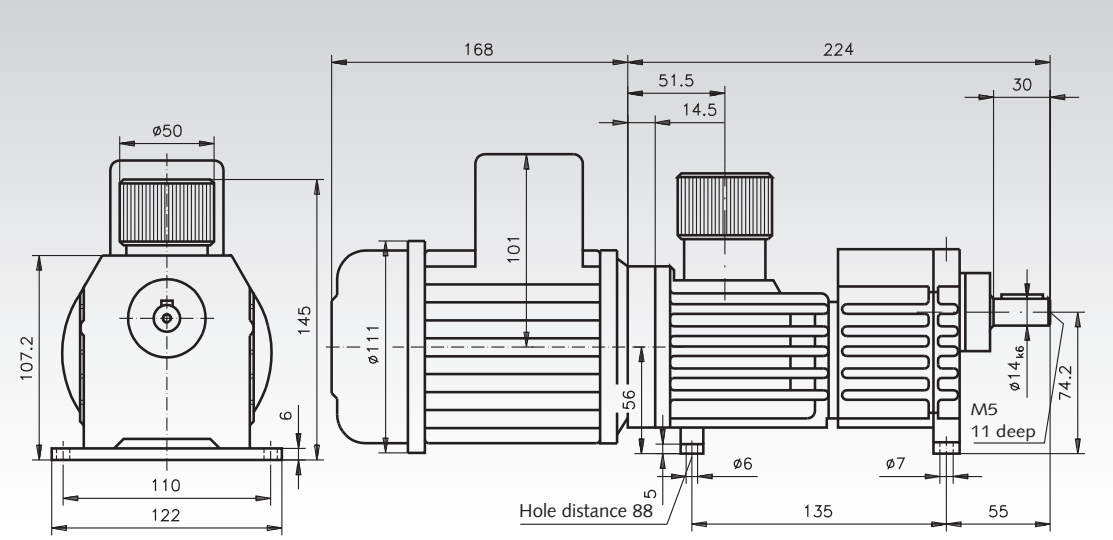

Model B3, Feather Key according to DIN 6885/1 (all Dimensions in mm)

Dimens. No. 5

Size 24 + 27

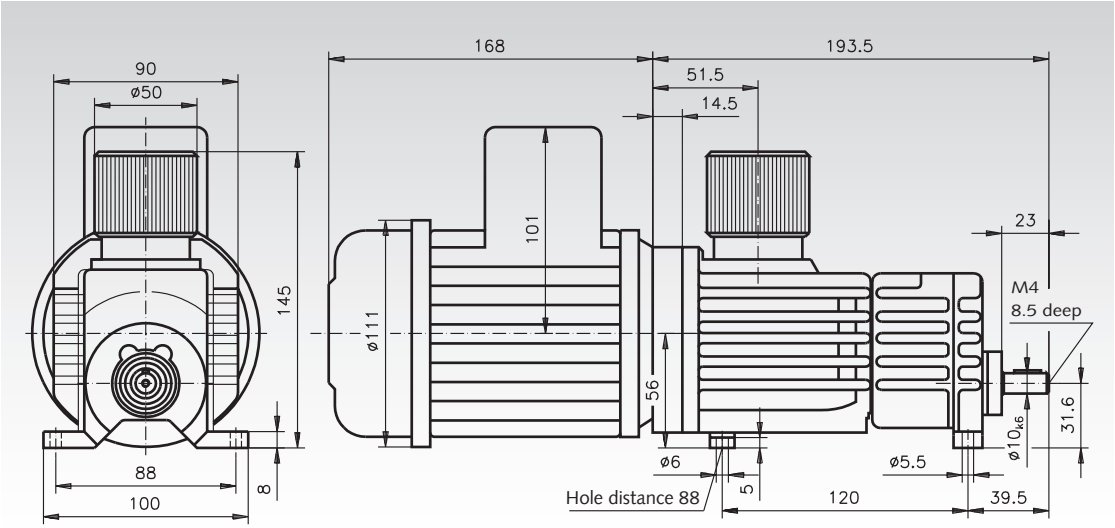

Dimens. No. 6

Size 250 + 260

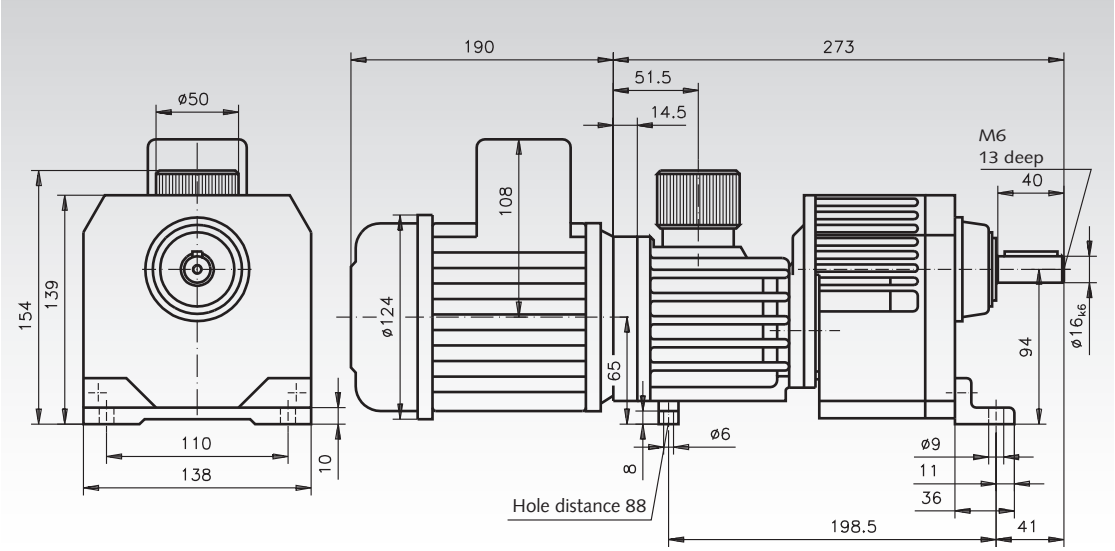

Dimens. No. 9

Size 2S1

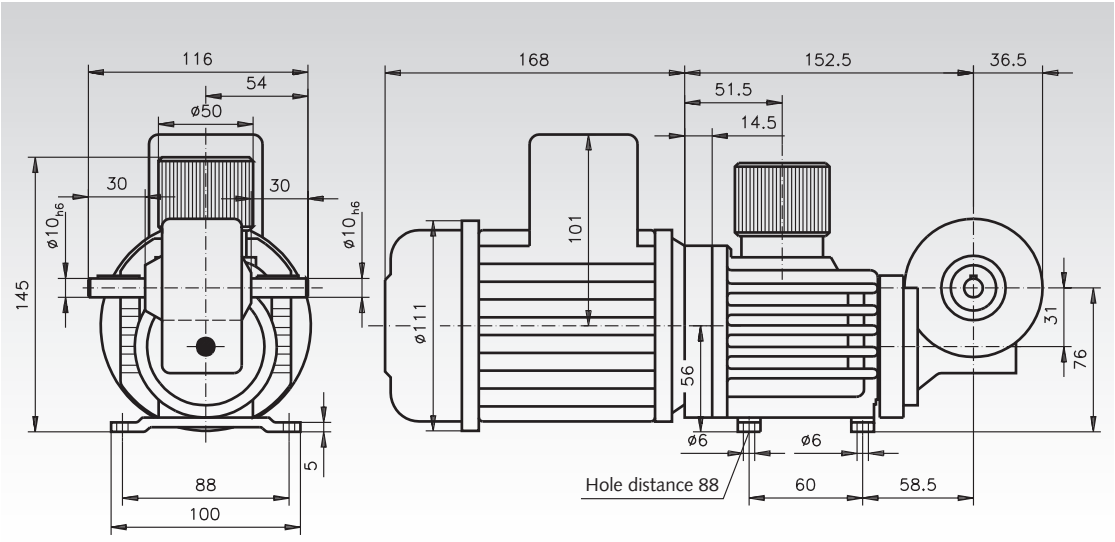

www.maedler.de

...the entire MÄDLER® range with CAD files on the Internet

We present the entire ***MÄDLER***® range with CAD files and ***MÄDLER***® info, continuously updated, on the internet. Fast access to the data, fast ordering by internet.
Orders by internet, phone, fax or e-mail: We guarantee delivery at short notice.





Dimensions and other information in this catalogue display the current state of technology. We reserve the right for changes.
This catalogue was created with due diligence, but errors might still occur. We refuse to accept any claims in this respect. We reserve the right to alter dimensions, and to change or remove single products and product groups without prior notice. Our general conditions of sales, delivery and payment can be found on the last page of this catalogue.

...we keep things moving

Linear Actuator Systems GR/I

General description:
Linear actuator, control box and hand operator make a ready-to-operate linear drive.
Voltage supply 230V or 24V on choice.
Up to 4 linear actuators can be operated with only one hand operator.

Usage: Universal use, for operating windows, gates, and for many other processes with swivel motion or linear motion.
Standard: CE / UL 60601-1 / EN60601-1.
Temperature range -5°C up to +40°C.

Linear actuators, control box and hand operator have to be ordered separately.



Linear Actuators GR/I

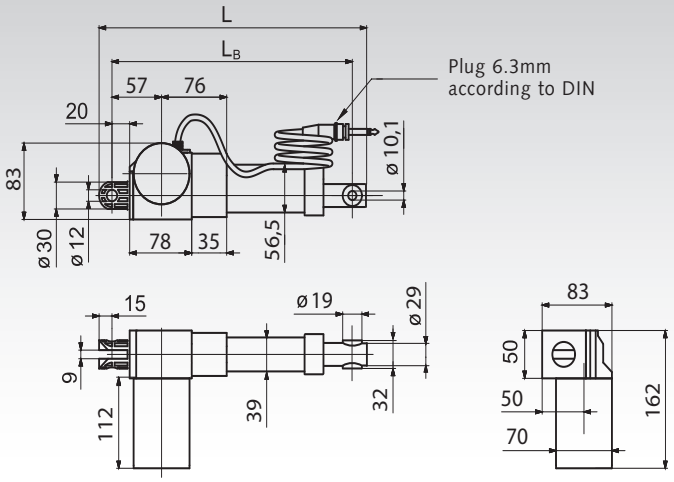



2 speeds.
8 stroke lengths. Other lengths in 50mm steps on request.
To be used with 230V AC or 24V DC-control box.
Motor voltage 24V DC. Protection class IP66. Cabel length approx. 1,2m.
Up to 4 actuators can be operated individually with only one hand operator.
Linear actuators, control box and hand operator have to be ordered separately.
Motor end stop switch integrated. Standard: CE / UL 60601-1 / EN60601-1.
Temperature range -5°C up to +40°C.

Ordering details: e.g.: Prod.-No. 475 130 10, Linear actuator 3 mm/sec, stroke 100 mm

Product No.	Speed mm/sec	Stroke length mm	max. Load tensil *L N	max. Load compressing * N	Length mm	Hole distance L_B mm	Weigth kg
475 130 10	3	100	4000	6000	301	275	1,98
475 130 20	3	200	4000	6000	401	375	2,12
475 130 30	3	300	4000	3900	501	475	2,40
475 130 40	3	400	4000	2300	601	575	2,62
475 130 50	3	500	4000	1500	701	675	2,78
475 130 60	3	600	4000	1100	801	775	2,98
475 130 80	3	800	4000	610	1001	975	3,40
475 131 00	3	1000	4000	400	1201	1175	3,80
475 140 10	12	100	2000	2000	301	275	1,98
475 140 20	12	200	2000	2000	401	375	2,12
475 140 30	12	300	2000	1300	501	475	2,40
475 140 40	12	400	2000	766	601	575	2,62
475 140 50	12	500	2000	509	701	675	2,78
475 140 60	12	600	2000	366	801	775	2,98
475 140 80	12	800	2000	202	1001	975	3,40
475 141 00	12	1000	2000	133	1201	1175	3,80

* Static and dynamic.

Control Boxes for Linear Actuators GR/I

Material: Housing in shock resistant, black plastic.

For voltage supply and processing the actuators.
On choice for 230V AC or 24V DC.
On choice for 1 actuator, 2 actuators or up to 4 actuators.
Limit switch and overload protection are integrated.
230V-version with IEC power cord with plug, cable length approx. 2.5m.
24V-version with 2m-connecting cable.
Protection class IP43.

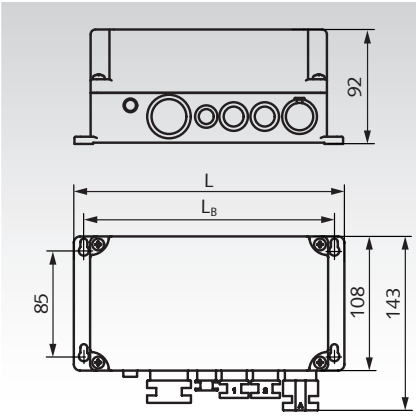



Ordering details: e.g.: Prod.-No. 475 190 01, control box 230V for 1 actuator

Product No.	Voltage supply	Suitable for	Length L mm	Distance L_B mm	Weight kg
475 190 01	230V AC	1 actuator	216	200	1,60
475 190 02	230V AC	1-2 actuators	216	200	1,66
475 190 04	230V AC	1-4 actuators	320	306	1,98
475 191 01	24V DC	1 actuator	216	200	0,80
475 191 02	24V DC	1-2 actuators	216	200	0,86
475 191 04	24V DC	1-4 actuators	320	306	1,18

Hand Operators for Linear Actuators GR/I

Material: Housing in shock resistant, black plastic.

For operating the linear actuators.
To be used with 230V AC or 24V DC control box.
On choice for 1 actuator, 2 actuators or up to 4 actuators.
The actuators can be operated separately by holding down the key.
With spiral cable, length 1m, tensiled approx. 2m.
Protection class IP54.

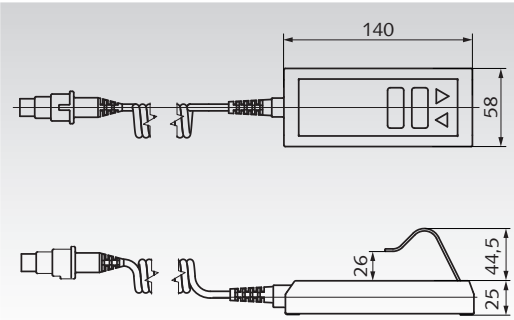



Ordering details: e.g.: Prod. No. 475 192 01, Hand operator for 1 actuator

Product No.	Suitable for	Number of Keys	Weight kg
475 192 01	1 actuator	1 pair of keys	0,20
475 192 02	1-2 actuators	2 pair of keys	0,22
475 192 04	1-4 actuators	4 pair of keys	0,24

Cable with plug for Linear Actuators GR/I, to connect with a Customer´s Controller

Product No. 475 192 05
Cable with plug with 8 pins and screen for to connect the GR/I control box with a customer´s controller (alternatively to the hand operator). Cable length approx. 1.8m - extended approx. 4m. Note: only for potentialfree contacts.

PIN 1: white, actuator #2 up.
PIN 2: green, actuator #3 up.
PIN 3: brown, actuator #1 up.
PIN 4: red, actuator #1 down.
PIN 5: yellow, actuator #3 down.
PIN 6: blue, actuator #4 down.
PIN 7: black, actuator #4 up.
PIN 8: violet, actuator #2 down.
Screen: transparent.
Ground: common.



Linear Drives (lifting devices) SFL 12 V - 24 V

Housing: Motor: Steel, zinc-plated. Gearbox: Aluminium.
Can be mounted in any position.
Gearbox: Metal gears, trapezoidal thread nuts made from plastic.
Bearing: Plain bearings.
Lubrication: Spindle nut must be greased by the customer.
Motor: DC motor 12 V or 24 V switching voltage, interference-free.
Change the direction of rotation by switching the polarity.
Protection class acc. to EN 60529: IP 20. Operating mode as per VDE 0530: S2.

Universal use linear drives, e.g. for actuating devices.
Either with or without Hall-IC for positioning, end position limit or speed control. For Spindle Tr. 10 x 3 mm.
The required spindle length depends on the required stroke length.
The spindles have to be ordered separately. Mounting eye and stop block qfor spindle ends are included with the linear drive.

Ordering Details: e.g.: 1 Piece Product No. 475 201 01, Linear Drive 1000N without Hall IC (Spindles have to be ordered separately).



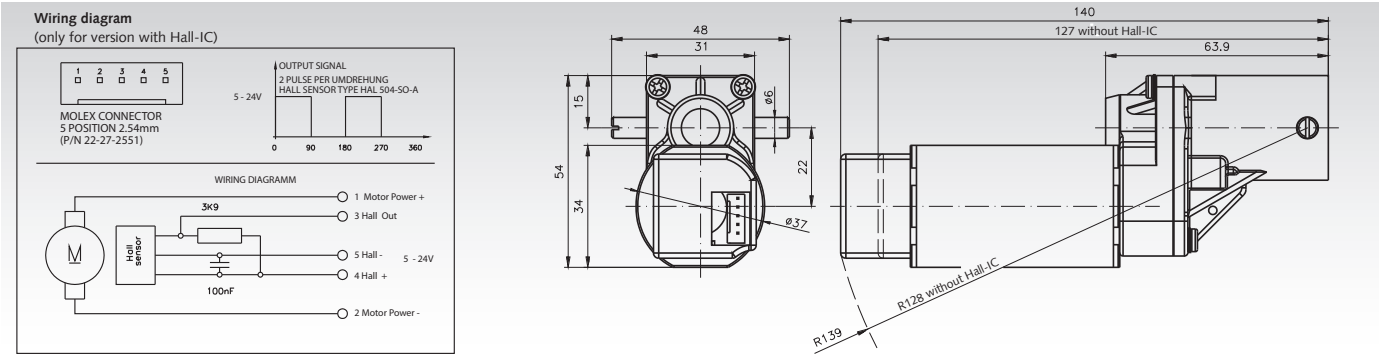

Product No. without Hall-IC	Product No. with Hall-IC	F Nom 1) N	I Nom 2) A	12 Volt-Operation F max 3) N	V 4) mm/s	ED 5) %	24 Volt-Operation F max 3) N	V 4) mm/s	ED 5) %	ratio i	Hall Pulses per linear motion puls/mm	Weight g
475 201 01	**475 201 11**	1000	1,0	-	-	-	1700	5,0	70	50:1	33,3	500
475 201 02	**475 201 12**	1200	3,2	600	5,0	50	2100	10,0	30	50:1	33,3	500
475 201 03	**475 201 13**	400 (200)*	1,5 (0,95)*	300	8,6	80	700	18,5	50	12:1	8,0	500
475 201 04	**475 201 14**	400	3,6	600	20,0	50	800	40,0	30	12:1	8,0	500

1) Nominal lifting power. 2) Nominal current. 3) Maximum lifting power. 4) Idle speed. 5) Maximum duty cycle.
* Datas in brackets are valid for 12V-Operation.

Speed controllers Page 696

Connecting Cable for Linear Drives with Hall-IC

Product No. 475 201 10 Connecting cable with one Molex plug for linear drives SFL with Hall-IC, length 500mm

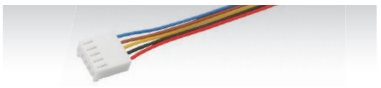

Note

All values are averages, measured with the motor cold. Deviations of 10% are possible. To prevent the gearbox from being overloaded, the stated limit loads must not be exceeded.
Important: The thread of the spindle nut has to be greased by the customer!

Factory interference suppression

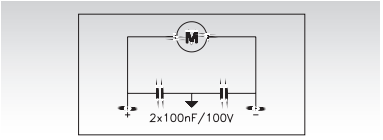

Spindles for linear drives (lifting devices) SFL

Material: Choice of C15 Steel or Stainless Steel 1.4305.

STAINLESS

Design: Either ready-to –use for 300mm stroke lengths or by the metre for further processing by the customer.
Caution: Due to kinking, the max stroke length under compressive loads is limited to 300 mm.
The spindle has to be adequately lubricated before screwing in and operating (with normal machine grease).
Mounting eye and stop block are included with the linear drive.



Ordering Details: e.g.: 1 Piece Spindle Product No. 475 201 30 for stroke lengths 300mm

Product No.	Length mm	Material	Weight g	Design
475 201 30	383	Steel C15	230	Ready-to-Install. For stroke lengths 300mm.
640 010 00	1000	Steel C15	600	Sold by the metre, for further processing by the customer.
640 990 10	1000	Stainless Steel	600	Sold by the metre, for further processing by the customer.

Lifting Devices & complete Systems

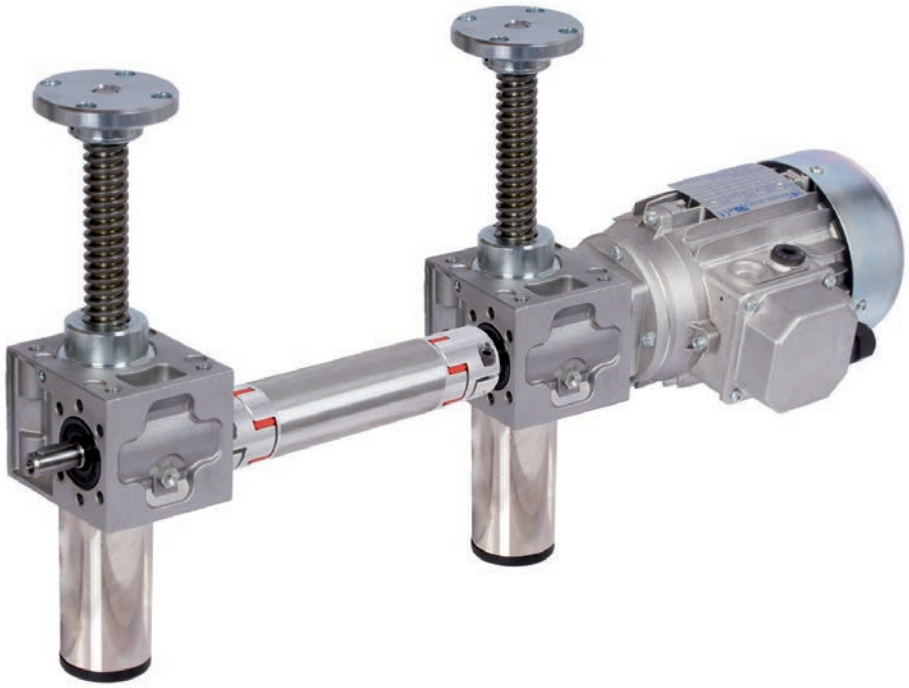

MÄDLER® is not only a supplier for single screw jack gearboxes and motors. We also deliver complete lifting systems, ready to install.

- Screw jacks with cube housing.
- Screw jacks with classic housing.
- Safety nuts.
- Foot-mounted motors (B3).
- Face-mounted motors (B14) with adaptor and elastic coupling.
- Backlash-free couplings.
- Bevel gearboxes.
- Connecting shafts.
- Additional parts (bellows, flange plates, hand wheels, etc).

Actuators, control boxes and hand operators have to be ordered seperately.

Ready assembled according your wishes!

Worm Gear Screw Jacks NP/I

Housing: Made from aluminium alloy in die-cast version.
All sides machined.
As standard filled with lubricant.

Gearing: Worm made from ETG100, Gear made from Gbz12.
Self-locking to a certain extend. Vibration, an increase in the spindle pitch or the use of rolling screw elements release the self-locking. In this case, e.g., a brake motor should be included in the system. For lower stroke speeds, worm gear sets with higher transmission ratios can be supplied on request.

Spindle: Material C15, from size 4 C45. On request also available as left-hand, stainless steel or ball screw version.

Protective sleeve: The versions A and B are, unless stated otherwise in the order, supplied with a protective sleeve.

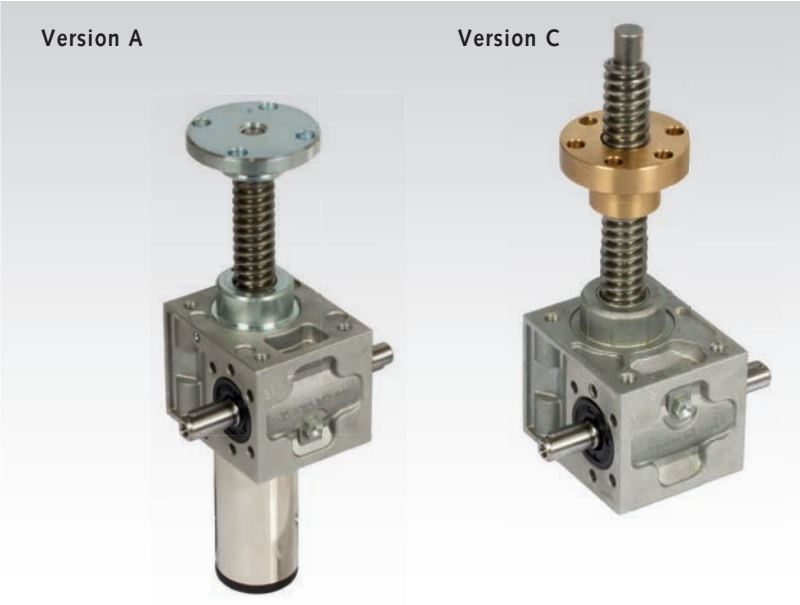

Versions

Version A: With this standard version the threaded spindle moves 1 mm in axial direction with every full rotation of the worm shaft. The spindle has to be secured against twisting.

Version B: Is the same as version A, but inside the gear unit a groove secures the spindle over its entire length against twisting. Thus the load can simply be applied.

Version C: In this version the spindle is fixed to the worm gear. The axial movement is taken over by the threaded nut running outside the gear unit (also 1 mm stroke per full rotation of the worm shaft).

Versions A and B are avaliable with an optional spindle end safety feature. This means the threaded spindle is locked before the safety sleeve is mounted, to limit the stroke in extended position so that the spindle cannot be screwed out of the gear unit. Attention: this safety feature means the safety sleeve is by about 20 mm longer.

The product numbers below only refer to the basic gear units without spindle. Please ask for the price of the complete unit including spindle and accessories as, e.g., flange plate/travelling nut, bellow or coil spring cover, fastening strips. On request a version for lower stroke speed can be supplied.

Technical Data and Dimensions Tables

Version A: Standard version.

Version B: With anti-rotation guide.

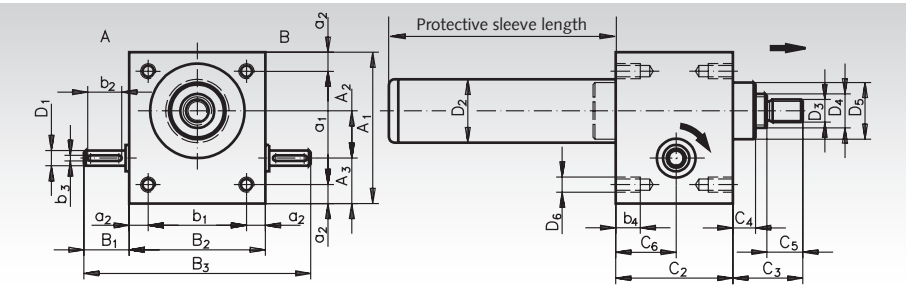

Ordering details: e.g.: Prod. No. Type, Size, Stroke Length, accessories

Product No. Vers. A	Product No. Vers. B	Size	max. Stroke Force N	D_4 Spindle	Efficiency %	Stroke[1] mm	MD[2] Nm	A_1 mm	A_2 mm	A_3 mm	a_1 mm	a_2 mm	B_1 mm	B_2 mm	B_3 mm
475 000 00	**475 006 00**	0	2500	Tr.16x4	33	1	1,5	64	22,62	17,38	48	8	20	54	94
475 001 00	**475 011 00**	1	5000	Tr.18x4	33	1	3,2	80	25	24	60	10	24	72	120
475 002 00	**475 012 00**	2	10000	Tr.20x4	31	1	7	100	32	28	78	11	27,5	85	140
475 003 00	**475 013 00**	3	25000	Tr.30x6	31	1	16	130	45	31	106	12	45	105	195
475 004 00	**475 014 00**	4	50000	Tr.40x7	28	1	34	180	63	39	150	15	47,5	145	240

Size	b_1 mm	b_2 mm	b_3 P9 mm	b_4 mm	C_2 mm	C_3 mm	C_4 mm	C_5 mm	C_6 mm	D_1 h6 mm	D_2 mm	D_3 mm	D_5 mm	D_6 mm	Protective Sleeve[3] mm	Weight[4] kg
0	38	16	3	11	50	30	12	15	25	9	33,5	M10	30	M6	Stroke +20 (45)	0,6
1	52	18	3	13	62	35	12	19	32	10	33,5	M12	30	M8	Stroke +20 (48)	1,2
2	63	20	5	15	75	45	18	19	37	14	42	M14	39	M8	Stroke +30 (55)	2,1
3	81	36	5	15	82	50	23	22	41	16	50	M20	46	M10	Stroke +30 (60)	6
4	115	36	6	16	117	65	32	29	59	20	65	M30	60	M12	Stroke +50 (85)	17

[1] Stroke pro full rotation of the input shaft. [2] Required torque at max. load (only under optimum conditions, with run-in spindle).
[3] Length in brackets for version with spindle end safety feature. [4] Only weight of gearbox without spindle and accessories.

Technical Data and Dimensions tables

Version C: Travelling nut version.

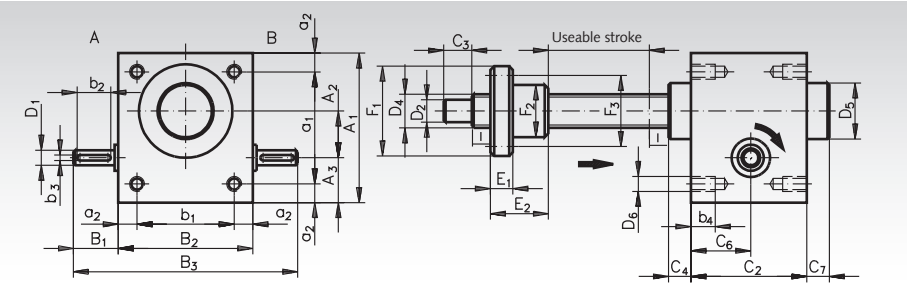

Ordering details: e.g.: Prod. No. Type, Size, Stroke Length, Accessories

Product No. Version C	Size	Max. Stroke Force N	D_4 Spindle	Degree of Efficiency %	Stroke* mm	MD** Nm	A_1 mm	A_2 mm	A_3 mm	a_1 mm	a_2 mm	B_1 mm	B_2 mm	B_3 mm
475 020 00	0	2500	Tr.16x4	33	1	1,5	64	22,62	17,38	48	8	20	54	94
475 021 00	1	5000	Tr.18x4	33	1	3,2	80	25	24	60	10	24	72	120
475 022 00	2	10000	Tr.20x4	31	1	7	100	32	28	78	11	27,5	85	140
475 023 00	3	25000	Tr.30x6	31	1	16	130	45	31	106	12	45	105	195
475 024 00	4	50000	Tr.40x7	28	1	34	180	63	39	150	15	47,5	145	240

Size	b_1 mm	b_2 mm	b_3^{P9} mm	b_4 mm	C_2 mm	C_3 mm	C_4 mm	C_6 mm	C_7 mm	l mm	D_1^{h6} mm	D_2^{j6} mm	D_5 mm	D_6 mm	E_1 mm	E_2 mm	F_1 mm	F_2^{h9} mm	F_3 mm	Mounting Bore Travelling Nut	Weight only Gearbox kg
0	38	16	3	11	50	12	12	25	17	10	9	10	30	M6	10	25	45	25	35	6 x Ø6	0,6
1	52	18	3	13	62	15	12	32	17	10	10	12	30	M8	12	44	48	28	38	6 x Ø6	1,2
2	63	20	5	15	75	20	18	37	23	15	14	15	39	M8	12	44	55	32	45	6 x Ø7	2,1
3	81	36	5	15	82	25	23	41	28	20	16	20	46	M10	14	46	62	38	50	6 x Ø7	6
4	115	36	6	16	117	30	32	59	37	25	20	25	60	M12	16	73	95	63	78	6 x Ø9	17

* Stroke pro full rotation of the input shaft.
** Required torque at max. load (only under optimum conditions, with run-in spindle).

Accessories: Flange Plates for Version A and B

Material: Steel 16MnCr5.

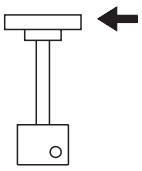

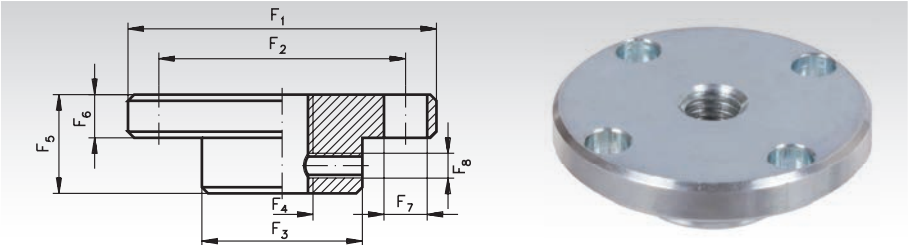

Size	F_1 mm	F_2 mm	F_3 mm	F_4	F_5 mm	F_6 mm	F_7 mm	F_8	Weight kg
0	50	40	26	M10	16	7	7	M4	0,1
1	65	48	29	M12	20	7	9	M5	0,2
2	80	60	39	M14	21	8	11	M6	0,3
3	90	67	46	M20	23	10	11	M8	0,6
4	110	85	60	M30	30	15	13	M8	1,3

Accessories: Fastening Strip Sets

Material: Steel St52.

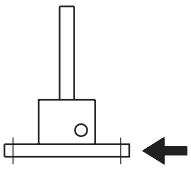

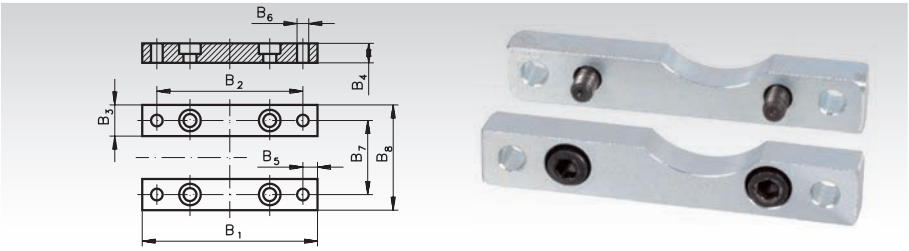

Size	B_1 mm	B_2 mm	B_3 mm	B_4 mm	B_5 mm	B_6 mm	B_7 mm	B_8 mm	Weight kg
0	90	75	15	10	7,5	6,5	38	54	0,1
1	120	100	20	10	10	8,5	52	72	0,3
2	140	120	20	10	10	8,5	63	85	0,5
3	170	150	25	12	10	11	81	105	1,0
4	230	204	30	16	13	13,5	115	145	1,8

Accessories For Worm Gear Screw Jacks

Bellows FB (Standard Version) Material: Molerit TH 59 for Worm Gear Screw Jacks Version A + B

Bellows protect the spindles against dirt and reduce the danger of accidents.
Not yet available for size 0.

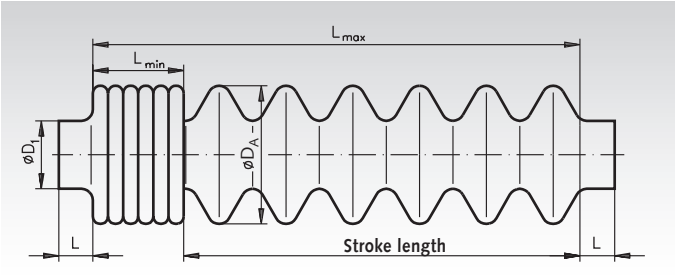



The product number is only required if the bellows is to be delivered separately (not on the gear unit).

Product No.	Size	D_1 mm	D_A mm	L mm	L_{min} mm	L_{max} mm	max. stroke [1] mm	Spindle length extension [2] mm	Weight kg
475 001 10	1	30	61	10	40	215	175	36	0,1
475 002 10	2	39	80	15	80	420	340	66	0,1
475 003 10	3	46	90	15	70	420	350	40	0,2
475 004 10	4	60	116	15	120	750	630	120	0,8

[1] For other stroke lengths on request. Alternatively with coil spring cover.
[2] With other stroke lengths the dimensions change! Extension has to be calculated for the dimensions C_3 Page 762.

End Switches ES-2 with Roller Push Rod

Optional Accessories for Worm Gear Screw Jacks. For end position switching off. Mounting for screw jacks version A and B in protective tube. Special versions of protective tube and spindle are required for this. The end switches have to be ordered together with the jack.

Ordering Details: e.g.: Worm Gear Screw Jack Type ... with two end switches ES-2 mounted in the protective tube.

Dimensions: Overall length x width x height = 111 x 31 x 33mm.
NC and NO contacts switch simultaneously.

Minimum operating rate 0.01m/s.
Fastening threads M18.
Wiring M20x1.5
Protection class IP65.



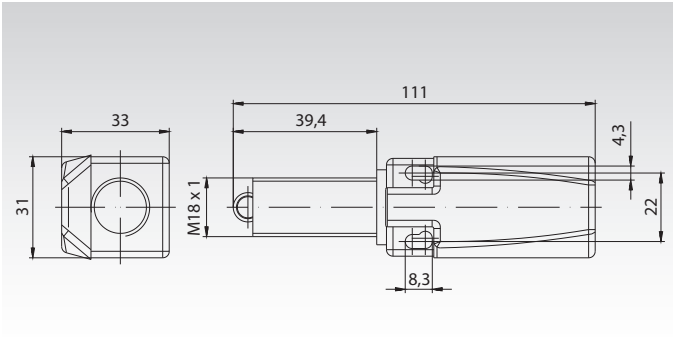

Attachment Schematic

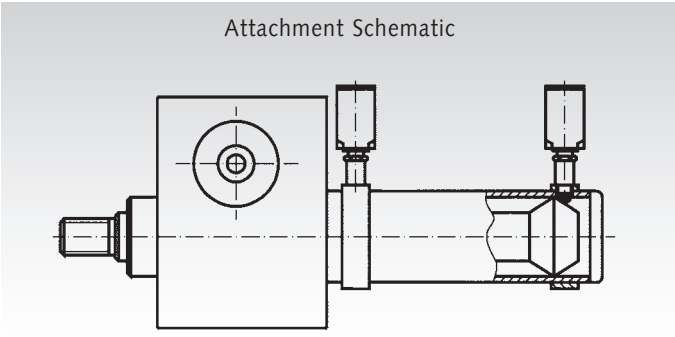

Connecting Shafts Page 766



Operating Time Worm Gear Screw Jacks NP/I

The stroke force and stroke speed predetermine which model and size should be chosen. A further decision criterion is the heating up caused by friction. To keep this value within limits, the nominal values must be corrected, using a temperature factor (f_t). The heating-up process depends on the operating time (OT) per time unit (in %).
For stroke speed V_H = const. applies: $F_{eff} = F_{Nom.} \cdot f_t$

For stroke force F = const. applies:

F_{eff} = effective stroke force
$F_{Nom.}$ = Nominal stroke force for model and size

OT-f_t-Diagram Example: OT = 40% = A f_t = 0,2

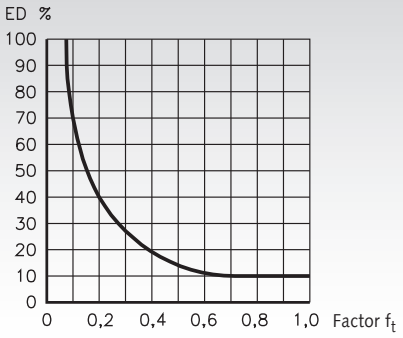

Buckling

Euler-Case 1 f_k=0.5

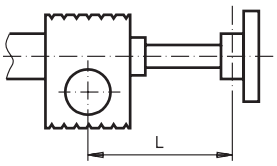

Version A and B
unguided stroke
fixed gear unit

Euler-Case 2 f_k=1

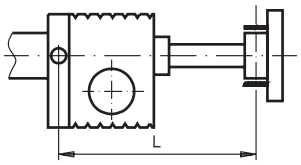

Version A and B
guided stroke
with swivel plate

Euler-Case 3 f_k=1.4

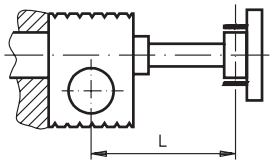

Version A and B
guided stroke
fixed gear unit

Euler-Case 4 f_k=2

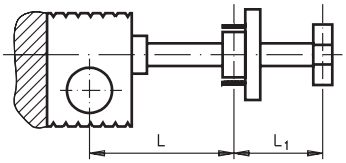

Version C
for small L_1 applies: f_k = 1.4 (Euler 3)

Buckling Force Pk [N]

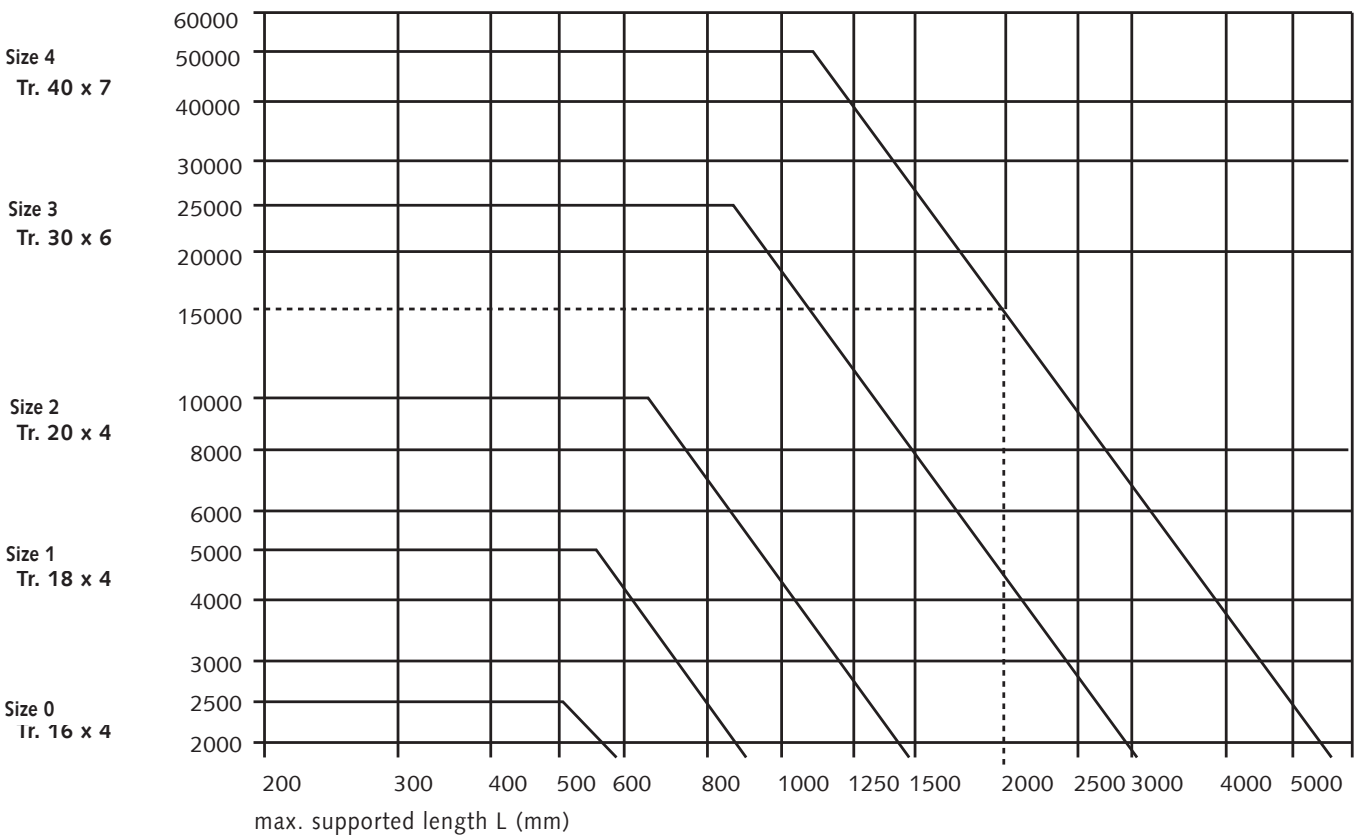

Example

Worm Gear Screw Jacks with Tr 40 x 7 and a spindle length of 2000 mm (stroke + nut + overrun), assumed safety factor S_k = 4
P_k from table: 15,000 N

Mounting set up Euler 1 = $P_{k\ permiss.}$ = 15,000 x 0.5 x 1/4
Mounting set up Euler 2 = $P_{k\ permiss.}$ = 15,000 x 1.0 x 1/4
Mounting set up Euler 3 = $P_{k\ permiss.}$ = 15,000 x 1.4 x 1/4
Mounting set up Euler 4 = $P_{k\ permiss.}$ = 15,000 x 2.0 x 1/4

Connecting Shafts RNW, backlash free, with half shell clamp

Material: Hubs and tube made of aluminium (stainless steel on request).
Spider (elastic insert) made from polyurethane, hardness 98° Shore A, red.

- Zero backlash, insertable elastic connecting shaft.
- Vibration-damping, ideal for connecting of gearbox shafts.
- Compensation of large shaft misalignment.
- The runout will get tested at each shaft.
- With half shell clamp hubs, ready-to-install, for rapid mounting / demounting without removal of the other units.

Temperature range: -30°C to +100°C.

Every shaft will be custom made in short time.

Delivery time: Regulary only 7 days.

Length: The total length L_A can be chosen stepless in a wide range.

Boreholes: The bores can be chosen stepless in a wide range.

Ordering details: Type, size - total length L_A - bore / bore - speed[1].

The product no. will be created in accordance with the customer´s specifications.



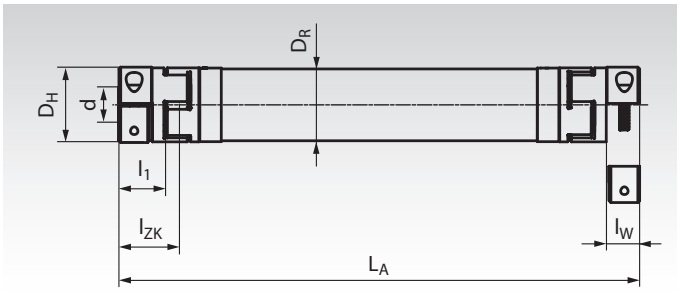

Ordering Example: RNW 14 - 0934 - 12 - 14 - 1500

- **Type, Size**
- **Total Length L_A (mm)**
- **Boreholes (mm)**
- **Speed (min^{-1})**

Note: Total length and speed[1] must be specificated with 4 digits.

Type, Size	Torques $T_{K\,nom.}$[2] Nm	Torques $T_{K\,max.}$[2] Nm	Boreholes d for choosen[3] mm	Length L_A for choosen[4] mm	D_H mm	D_R mm	Ø max.[5] mm	l_1 mm	l_W mm	l_{ZK} mm	Weight without tube kg	Weight only tube kg/m
RNW 14	12,5	25	4 - 14	102 - 3000	30	30	34	11	8	17,5	0,08	1,1
RNW 19	17	34	8 - 20	133 - 3000	40	35	46	25	19,5	33	0,30	1,32
RNW 24	60	120	10 - 28	157 - 3500	55	50	57,5	30	22	39	0,73	1,98
RNW 28	160	320	14 - 38	181 - 4000	65	60	73	35	25	45	1,04	2,42
RNW 38	325	650	18 - 45	229 - 4000	80	75	83,5	45	33	57	1,98	4,45
RNW 42	450	900	22 - 50	253 - 4000	95	100	100	50	36,5	63	3,31	7,90
RNW 48	525	1050	22 - 55	281 - 4000	105	100	100	56	39,5	70	4,57	7,90

[1] The max. speed depends on the size and on the total length LA. See chart on next page.

[2] These torques can be endured by the insert. For the dimensioning, the max. torque rates of the clamp hubs must also be considered.

[3] Standard boreholes with the max. torques of the clamp hubs see next page.

[4] Greater lengths on request.

[5] Screw head protrudes past diameter D_H or D_R.

Further Details

Type Size	Screw Size DIN 912	Tightening Torque Nm	Torsion Stiffness CT/m dyn. Nm/rad	Moment of Inertia Couplings [1] 10^{-3} Kgm²	Moment of Inertia Tube/m 10^{-3} Kgm²
RNW 14	M4	5	500	0,001	0,18
RNW 19	M6	10	1770	0,044	0,30
RNW 24	M6	10	6400	0,133	1,01
RNW 28	M8	25	11400	0,202	1,84
RNW 38	M8	25	23000	0,491	5,13
RNW 42	M10	49	194000	4,08	16,2
RNW 48	M12	86	194000	6,86	16,2

[1] Moment without tube, calculated at the biggest borehole.

Spare Part Inserts

Product-No. Spare Part Insert	Type, Size	Ø ca. mm	Number of Teeth	Weight g
605 198 14	RNW 14	30	4	4,6
605 198 19	RNW 19	40	6	7
605 198 24	RNW 24	55	8	18
605 198 28	RNW 28	65	8	29
605 198 38	RNW 38	80	8	49
605 198 42	RNW 42	95	8	79
605 198 48	RNW 48	105	8	98

Connecting Shafts RNW, further details

Boreholes and maximum torques of the clamp hubs

Standard boreholes [mm] max. torque rates of the clamp hubs [Nm][1)]

Type, Size	4	6	8	10	11	14	15	16	18	19	20	22	24	25	28	30	32	35	38	40	42	45	46	48	50	55
RNW 14	3,5	4,8	5,1	5,5	5,6	6,1																				
RNW 19			17	21	23	30	32	34	38	40	42															
RNW 24				21	23	30	32	34	38	40	42	47	51	53	59											
RNW 28						54	58	62	70	74	78	86	93	97	109	117	124	136	148							
RNW 38									70	74	78	86	93	97	109	117	124	136	148	156	163	175				
RNW 42												136	149	155	174	186	198	217	235	248	260	279	285	297	310	
RNW 48												199	217	226	253	271	290	317	344	362	380	407	416	434	452	498

[1)] Other boreholes (intermediate sizes) are available at the same price. Keyways are available at extra charge.

Max. shaft disalignment

Axial misalignment

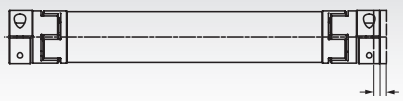

See table misalignment values.

Radial misalignment

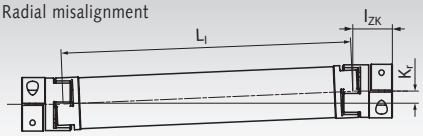

$L_I = L_A - (2 \times l_{ZK})$

K_r max. = 1.2 mm per 100 mm L_I

Angular misalignment



See table misalignment values.

Max. speed in relation to the total length L_A. Higher speed on request.

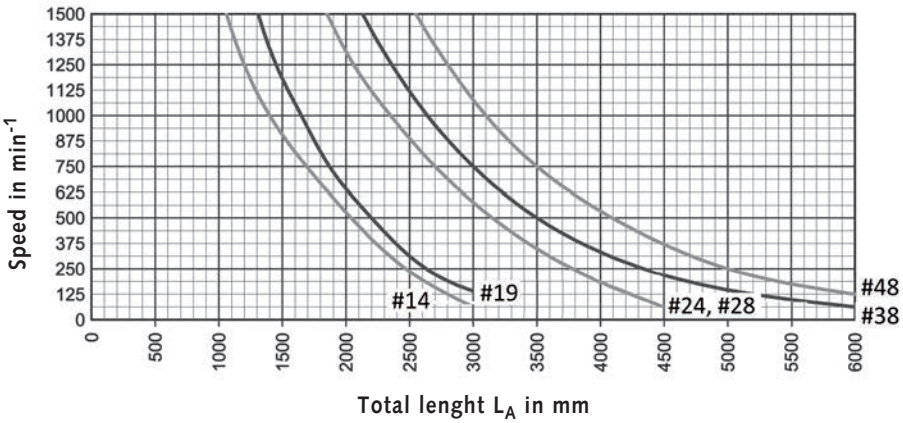

Misalignment values of the connecting shafts

Type, Size	Axial Misalignment mm	Angular Misalignment °
RNW 14	+1,0 / -0,5	0,9
RNW 19	+1,2 / -0,5	0,9
RNW 24	+1,4 / -0,5	0,9
RNW 28	+1,5 / -0,7	0,9
RNW 38	+1,8 / -0,7	0,9
RNW 42	+2,0 / -1,0	0,9
RNW 48	+2,1 / -1,0	0,9

Please note that the max. misalignment values (axial, radial and angular displacement) are mutually exclusive. If the misalignment in one direction reaches the maximum, the other two remaining misalignments must be at zero.

Further models on request

One side stiff:
One side stiff, other side with elastic coupling.
For example for use with a pillow block bearing at the stiff side.

Both sides stiff:
Both sides stiff, without any elastic coupling.
To use only, if there is no misalignment.

Stainless steel:
All models are also available in stainless steel (couplings and also the tube).

Hinges at MÄDLER®:



on the internet at www.maedler.de



Content (sorted numerically)	Page
General description	770
Selection table	771
Linear motion guide DA 0115 RC	809
Linear motion guide DFG 115	810
Slides DZ 0201	774
Slides DZ 0204	777
Slides DZ 0301	795
Slides DZ 0305	794
Slides DS 0330	790
Slides DZ 0522	806
Slides DZ 2002	773
Slides DZ 2026	775
Slides DS 2028	778
Slides DZ 2109	772
Slides DB / DZ 2132	776
Slides DZ 2601	780
Slides DZ 2642	781
Slides DZ 2907	789
Slides DS 3031	796
Slides DZ 3301	791
Slides DZ 3307	792
Slides DZ 3308	793
Slides DZ 3607	799
Slides DZ 3732	782
Slides DZ 3832	783
Slides DH 3832	784
Slides DZ 3832 DO	787
Slides DZ 3832 SC	786
Slides DZ 3832 TR	785
Slides Type DA 4120	779
Slides Type DA 4160	805
Slides DS / DZ 5321	802
Slides DZ 5321 SC	801
Slides DA 5321	788
Slides DS 5322	798
Slides DZ 5417	797
Slides DZ 7957	800
Slides DZ 9301	803
Slides DZ 9308	804
Brackets DZ 633	807
Bracket Kits Type DZ 634	808

Selection Tool

on the Internet at

www.maedler.de

in the section

MÄDLER®-Tools

General Description and Technical Notes

General Description and Application

High-quality, maintenance-free, ball bearing precision slides for various applications in machines and appliances used in trade or industry:
e.g. vending machines, automated pay stations, production plants, for protected storage of input or monitoring devices on computer controlled machine tools and production lines, pull-out shelves, cover hoods etc. In vehicles (mobile workshop, fire rescue or first aid trucks/vehicles, passenger trains) and aeroplanes pull-out objects also facilitate an optimum utilization of the available space.



Material

Slide elements: Cold-rolled steel, in part stainless steel 1.4301.
Ball retainers: Pre-plated cold-rolled steel, in part stainless steel or plastic.
Balls: Bearing steel, hardened, in part stainless steel.

Lubrication and Temperature Range

Maintenance free: Lubricated for life with low-temperature grease, -20°C to +120°C.
No relubrication required.
Temperature range: -17°C to +70°C.

Surface Protection

Zinc plated, bright, some parts passivated black or painted white. Type DH3832 with special zinc coating for extra strong corrosion protection (stainless steel parts have their natural colour).

Selection and Dimensioning

For easy selection we recommend using the selection table on page 771 considering the following criteria:
- **3/4 or full extension.**
- **Load rating.**
- **Additional features.**
- **Surface finish / material.**
- **Outer dimensions.**

An optimum sliding action is achieved under load. The slides should therefore never be heavily over-dimensioned.

Travel

Difference regarding 3/4 extension and full extension:
3/4 Extension: Two-part slides allow a travel of about 75% of the slide length.
Full extension: Three-part slides allow a travel of about 100% of the slide length. Some of these types offer an even larger travel (over extension). Type 2026 offers 3/4 extension in both directions.
All other types can only be pulled out in one direction.

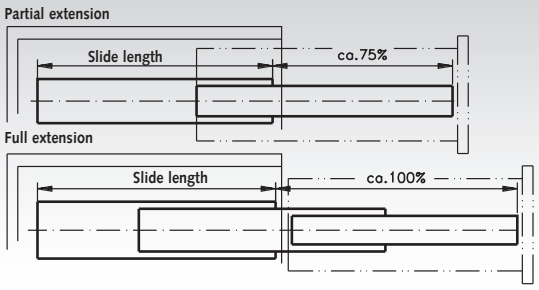

Additional Features

Depending on the slide type, all slides are equipped for different special requirements:
- **Fast disconnection:** Allows easy disconnection of the drawer.
- **Hold-in:** Holds the drawer in closed position.
- **Hold-out:** Holds the drawer in open position.
- **Locking:** Locks the drawer in closed and/or open position. A lever must be actuated to move the slide.
- **Self close:** A spring mechanism retracts the pulled-out slide.
- **Bracket mount:** For an optimum side or bottom/platform mounting. With Type DZ 2109 the brackets included.

For Types DZ 2132, 3832, 3832SC/DO, 7957, 9301 and 9308 brackets can be ordered separately.
Optional brackets to mount slides inside electrical cabinets can be supplied on request. Some slide types also offer the possibility to adjust the drawer fronts with special adjusting cams.

Load Bearing Capacity

The stated load ratings relate to the maximum permissible load for a pair of vertically mounted slides (side mounted slides). For horizontally (flat) mounted slides the load bearing capacity is reduced to only 25% of the stated load rating. The load ratings refer to a load applied to the midpoint of the slide, at a travel of 450 mm.
The stated load ratings are dynamic values. For static set ups the value can at max be doubled.

Mounting

Optimum movement is achieved under slight tensile force. The mounting width should therefore exceed the slide width by 0.2 to 0.5 mm. After mounting, the slides should be checked for easy movement, and if necessary be adjusted. If no easy sliding movement can be achieved, the mounting set up should be checked regarding width, allignment and angularity.

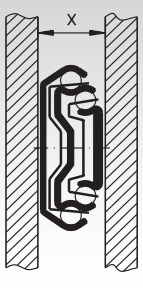

Mounting Width X
= Slide Width +0,2 / +0,5 mm

Slides Selection Table

The slides in the table are sorted as follows: 1. According to the extension type: Partial or full extension / over extension.
2. Within the extension type: according to load rating, from low to high.

Slide Type	Page	Travel	Load kg	Width x Height mm	Fast Disconnect	Hold In	Hold Out	Locking 1)	Self Closure	Optional Mounting Brackets	Surface Finish or Material
DZ 2109	**772**	Partial	35	12,7 x 34,8	●	●	●			●	zinc plated
DZ 2002	**773**	Partial 2)	35	9,5 x 35,1		●					zinc plated
DZ 0201	**774**	Partial	50	9,5 x 35,3							zinc plated
DZ 2026	**775**	Partial 2)	50	9,5 x 35,3			●				zinc plated
DB/DZ 2132	**776**	Partial	50	12,7 x 35	●	●				●	either bright or black zinc plated
DZ 0204	777	Partial	65	9,5 x 35,3	●			**A**			zinc plated
DS 2028	778	Partial	65	9,5 x 35,3		●					Stainless Steel STAINLESS
DA 4120	779	Partial	550	36 x 80							Aluminium
DZ 2601	780	Full	45	12,7 x 26,3		●					zinc plated
DZ 2642	781	Full	45	12,7 x 26,3		●					zinc plated
DZ 3732	782	Full	40	12,7 x 37	●	●				●	zinc plated
DZ 3832	783	Full	50	12,7 x 45,7	●	●				●	zinc plated
DH 3832	784	Full	50	12,7 x 45,7	●	●					zinc plated
DZ 3832TR	785	Full	45	12,7 x 45,7	●	Touch Release 3)					zinc plated
DZ 3832SC	786	Full	50	12,7 x 45,7	●	●			●	●	zinc plated
DZ 3832DO	787	Full	50	12,7 x 45,7	●	●	●			●	zinc plated
DA 5321	788	Over	50	19,1 x 53,1		●					Aluminium
DZ 2907	789	Over	55	9,6 x 41	●			**A**			zinc plated
DS 0330	790	Full	80	19,1 x 35		●					Stainless Steel STAINLESS
DZ 3301	791	Over	68	12,7 x 50,8		●					zinc plated
DZ 3307	792	Over	68	12,7 x 50,8	●			**A**			zinc plated
DZ 3308	793	Over	68	12,7 x 50,8	●			**E/A**			zinc plated
DZ 0305	794	Over	70	19,1 x 35,5	●			**A**			zinc plated
DZ 0301	795	Over	70	19,1 x 35,3							zinc plated
DS 3031	796	Over	80	19,1 x 35,3							Stainless Steel STAINLESS
DZ 5417	797	Over	100	17,5 x 54,0		●					zinc plated
DS 5322	798	Over	120	20,7 x 53,1		●					Stainless Steel STAINLESS
DZ 3607	799	Over	120	19,1 x 53,1	●			**A**			zinc plated
DZ 7957	800	Full	160	19,1 x 70,8	●					●	zinc plated
DZ 5321SC	801	Over	120	19,1 x 53,1		●			●		zinc plated
DZ 5321	802	Over	170	19,1 x 53,1		●					zinc plated
DS 5321	802	Over	170	19,1 x 53,1		●					Stainless Steel STAINLESS
DZ 0522	806	Over	180	26,5 x 95,5							zinc plated
DZ 9301	803	Full	227	19,1 x 76,2						●	zinc plated
DZ 9308	804	Over	227	19,1 x 76,2				**E/A**		●	zinc plated
DA 4160	805	Full	300	26,5 x 80,0							Aluminium

1) A = Locks in open position. E = Locks in closed position.
2) Partial Extension in both directions.
3) Opens by pressing on the drawer (grip or knob not required).



Other Accuride® Products on request.

Linear guides on page 809

Slides DZ 2109, Width 12.7* mm, with Bracket Mounts, to 35 kg, 3/4 Extension

Material:
Slide elements: Cold-rolled steel, bright zinc plated.
Ball retainers: Cold-rolled steel, zinc-plated.
Balls: Hardened steel.

Telescopic ball bearing slides, especially suited for keyboard trays.
- Fast disconnection.
- Hold-in in closed position and hold-out in open position.
- Height-adjustable bracket mount included.
- Optional clip-on bracket (page 807).
- Especially long service life, up to 50,000 cycles!

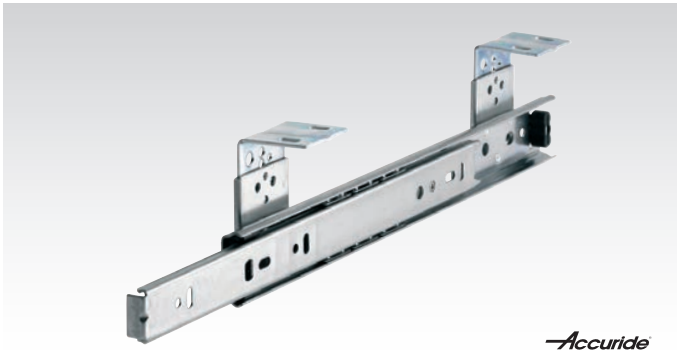

Ordering details: e.g.: Prod. No. 649 062 30, Slides DZ 2109, with Bracket Mounts

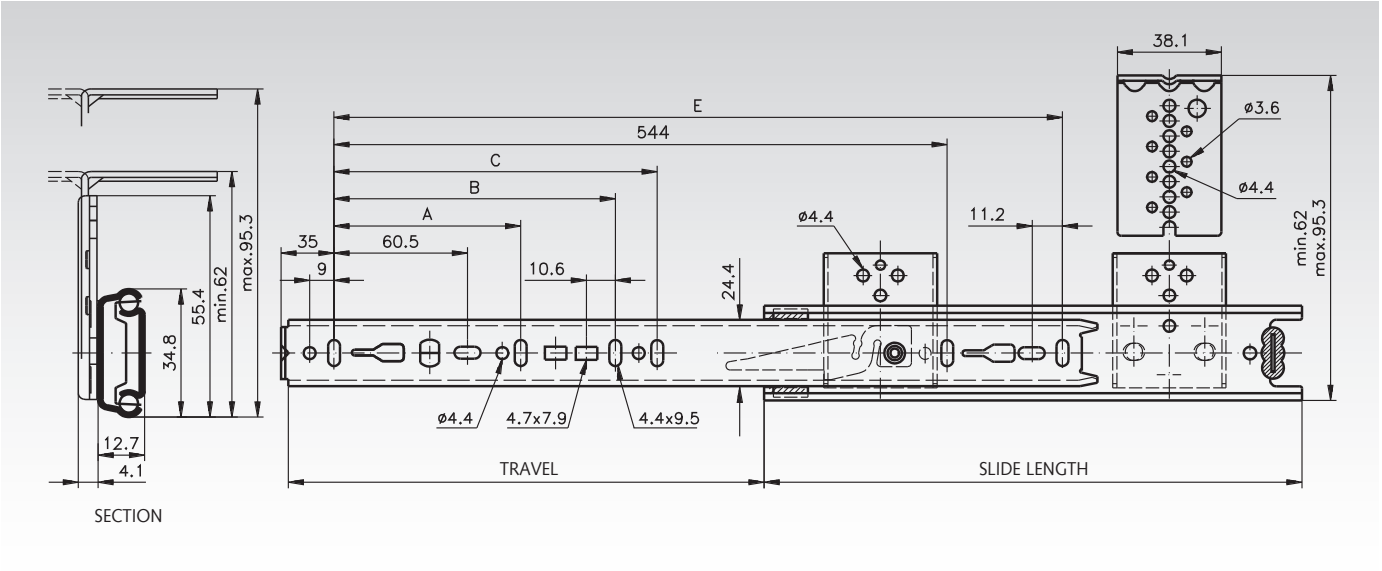

Product No. per Pair	Slide Length mm	Travel +/-3,2 mm	A mm	B mm	C mm	E mm	F** mm	Load Rating per pair kg	Weight per Pair kg
649 062 30	300	205	96	-	-	242	215,9	35	0,87
649 062 35	350	260	128	-	-	292	215,9	35	0,99
649 062 40	400	281	128	-	-	342	215,9	30	1,07
649 062 45	450	331	128	224	-	392	215,9	30	1,14
649 062 50	500	376	128	224	-	442	292,1	25	1,23
649 062 55	550	415	128	224	320	492	292,1	25	1,33

* Width with bracket mount 16.8 mm.

** See operating instructions on the internet at www.maedler.de in the Section Downloads.

Mounting Example: Sliding Keyboard Tray

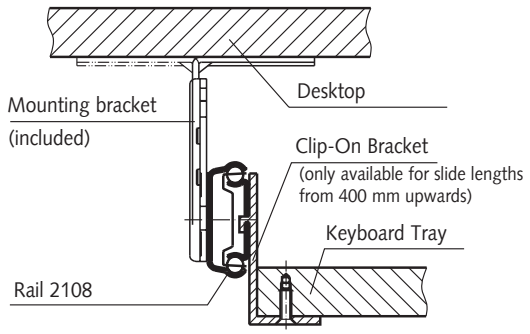

Note

Recommended mount: M4 screw (included in delivery).
Use all mounting positions to achieve the max. load rating.

Clip-on brackets see page 807.

Selection Tool
on the Internet at **www.maedler.de**
in the section **MÄDLER®-Tools**

Slides DZ 2002, width 9.5 mm, up to 35 kg, extension in both directions

Material:
Slide elements: Cold-rolled, bright zinc-plated steel.
Ball retainers: Cold rolled, zinc-plated steel.
Balls: Hardened steel.

Telescopic precision ball bearing slides for applications in the industrial and electronics sector.
- Hold-in in the centre position.
- Forward and return slide. For applications, that require access from both sides of a sliding unit.
- Fasteners included.
- High service life 50,000 cycles.



Ordering Details: e.g.: Product No. 649 003 30, Slides DZ 2002

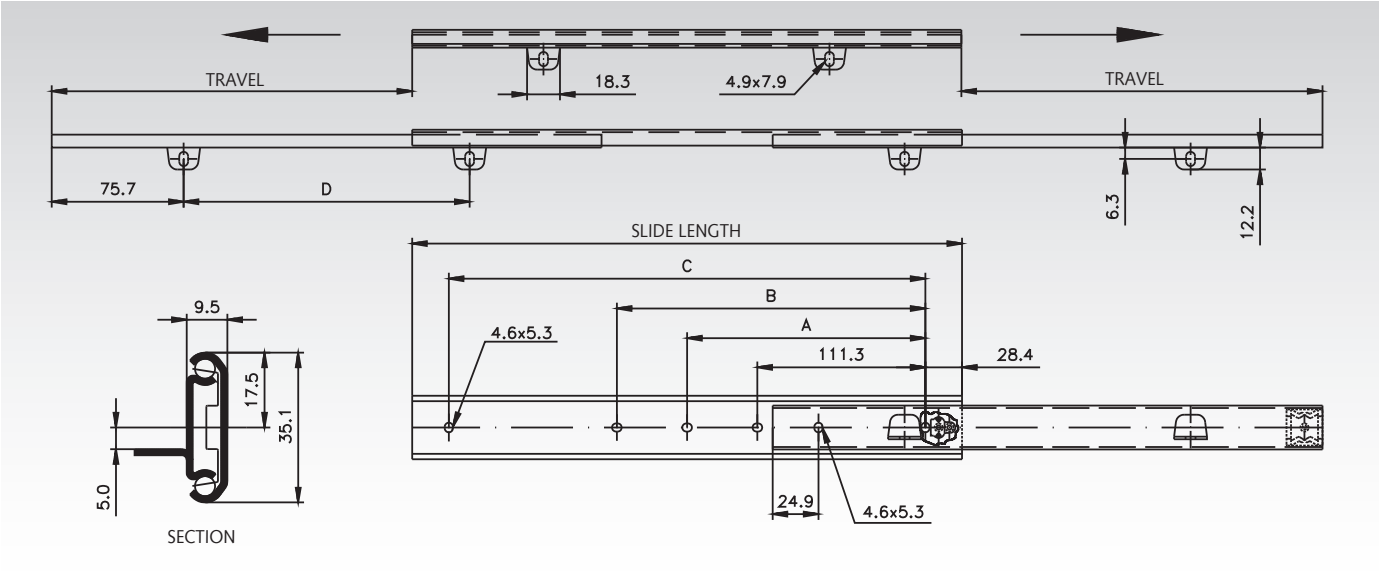

Product No. per pair	Slide length mm	Travel +/-3.2 mm	A mm	B mm	C mm	D mm	Load Rating Pair kg	Weight Pair kg
649 003 30	305	222	-	136,7	247,7	153,4	35	0,59
649 003 35	356	272	-	187,5	298,5	204,2	35	0,69
649 003 40	406	298	-	238,3	349,3	255,0	35	0,78
649 003 45	457	323	200,2	289,1	400,1	305,8	35	0,89
649 003 50	508	374	225,6	339,9	450,9	356,6	32	1,00
649 003 55	558	399	251,0	390,7	501,7	407,4	31	1,08
649 003 60	610	425	276,4	441,5	552,5	458,2	29	1,19
649 003 65	660	476	301,8	492,3	603,3	509,0	27	1,28
649 003 70	711	501	327,2	543,1	654,1	559,8	24	1,38

Note

Recommended fastening: M4 screw.
Use all mounting positions to achieve the max. load rating.



Slides DZ 0201, Width 9.5 mm, to 50 kg, 3/4 Extension

Material:
Slide elements: Cold-rolled steel, bright zinc plated.
Ball retainers: Cold-rolled steel, zinc-plated.
Balls: Hardened steel.

Telescopic ball bearing slides for applications in the industrial and electronics sector.
- Can be mounted on both sides.
- Bracket mount for electrical cabinets on request.
- Service life 10,000 cycles.



Ordering details: e.g.: Prod. No. 649 000 12, Slides DZ 0201

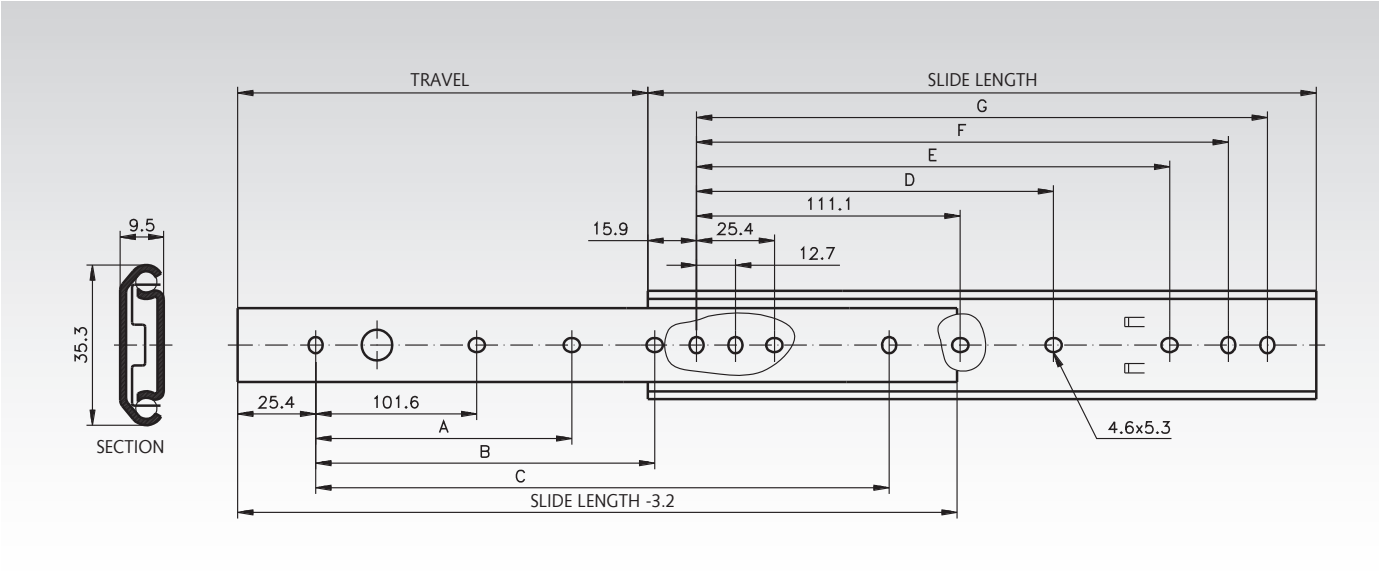

Product No. per Pair	Slide Length mm	Travel +/-3.2 mm	A mm	B mm	C mm	D mm	E mm	F mm	G mm	Load Rating per Pair kg	Weight per Pair kg
649 000 12	305	227	-	152,4	254,0	-	149,2	260,3	273,0	50	0,64
649 000 14	356	277	-	203,2	304,8	-	200,0	311,2	323,9	50	0,73
649 000 16	406	302	-	254,0	355,6	-	250,8	361,9	374,6	45	0,83
649 000 18	457	328	203,2	304,8	406,4	212,7	301,6	412,7	425,4	45	0,94
649 000 20	508	379	228,6	355,6	457,2	238,1	352,4	463,5	476,2	40	0,97
649 000 22	559	405	254,0	406,4	508,0	263,5	403,2	514,3	527,0	40	1,07
649 000 24	610	429	279,4	457,2	558,8	288,9	454,0	565,1	577,8	35	1,17
649 000 26	660	481	304,8	508,0	609,6	314,3	504,8	615,9	628,6	30	1,26
649 000 28	711	506	330,2	558,8	660,4	339,7	555,6	666,7	679,4	30	1,45

Note

Recommended mounts: M4 screw.
Use all mounting positions to achieve the max. load rating.

Slides DZ 2026, Width 9.5 mm, to 50 kg, Two-Way Travel

Material:
Slide elements: Cold-rolled steel, bright zinc plated.
Ball retainers: Cold-rolled steel, zinc-plated.
Balls: Hardened steel.

Telescopic ball bearing slides for applications in the industrial and electronics sector.
- Hold-out on both sides.
- Pulls out to front and back. For applications requiring access from both sides of the drawer.
- Service life 10,000 cycles.



Ordering details: e.g.: Prod. No. 649 004 30, Slides DZ 2026

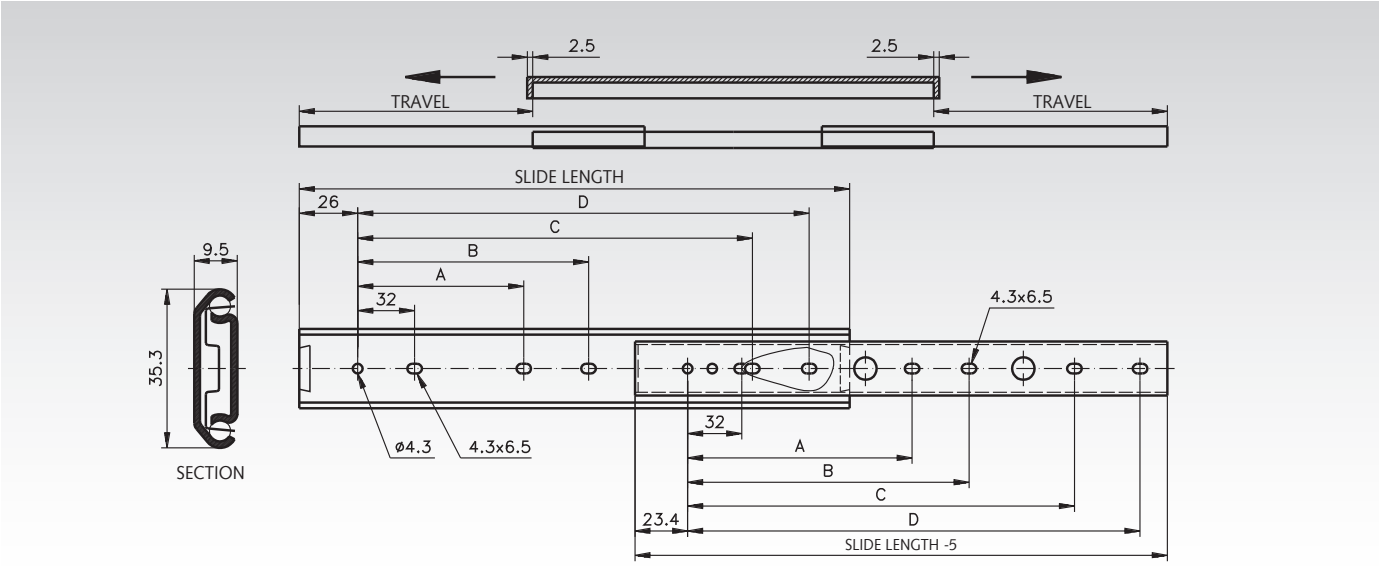

Product No. per Pair	Slide Length mm	Travel +/-3.2 mm	A mm	B mm	C mm	D mm	Load Rating per Pair kg	Weight per Pair kg
649 004 30	300	209	128	160	224	256	50	0,56
649 004 35	350	246	160	192	256	288	50	0,65
649 004 40	400	283	192	224	320	352	45	0,74
649 004 45	450	321	224	256	352	384	40	0,84
649 004 50	500	358	256	288	416	448	40	0,94
649 004 55	550	395	256	288	480	512	35	1,03
649 004 60	600	433	288	320	512	544	35	1,13
649 004 65	650	470	288	320	576	608	30	1,21
649 004 70	700	507	320	352	608	640	30	1,32

Note

Recommended mounts: M4 screw.
Use all mounting positions to achieve the max. load rating.

Selection Tool
on the Internet at **www.maedler.de**
in the section **MÄDLER®-Tools**

Slides DZ / DB 2132, Width 12.7 mm, to 50 kg, 3/4 Extension

Material:
Slide elements: Cold-rolled steel, zinc plated.
Ball retainers: Cold-rolled steel, zinc-plated.
Balls: Hardened steel.

Telescopic ball bearing slides for applications in the industrial and electronics sector.
- Fast disconnection.
- Hold-in in closed position.
- Optional clip-on bracket (page 807).
- Version zinc plated, either bright or black.
- Cam drawer adjust (3.1 mm).
- Service life 10,000 / 80,000 cycles.

Ordering details: e.g.: Prod. No. 649 010 25, Slides DZ 2132



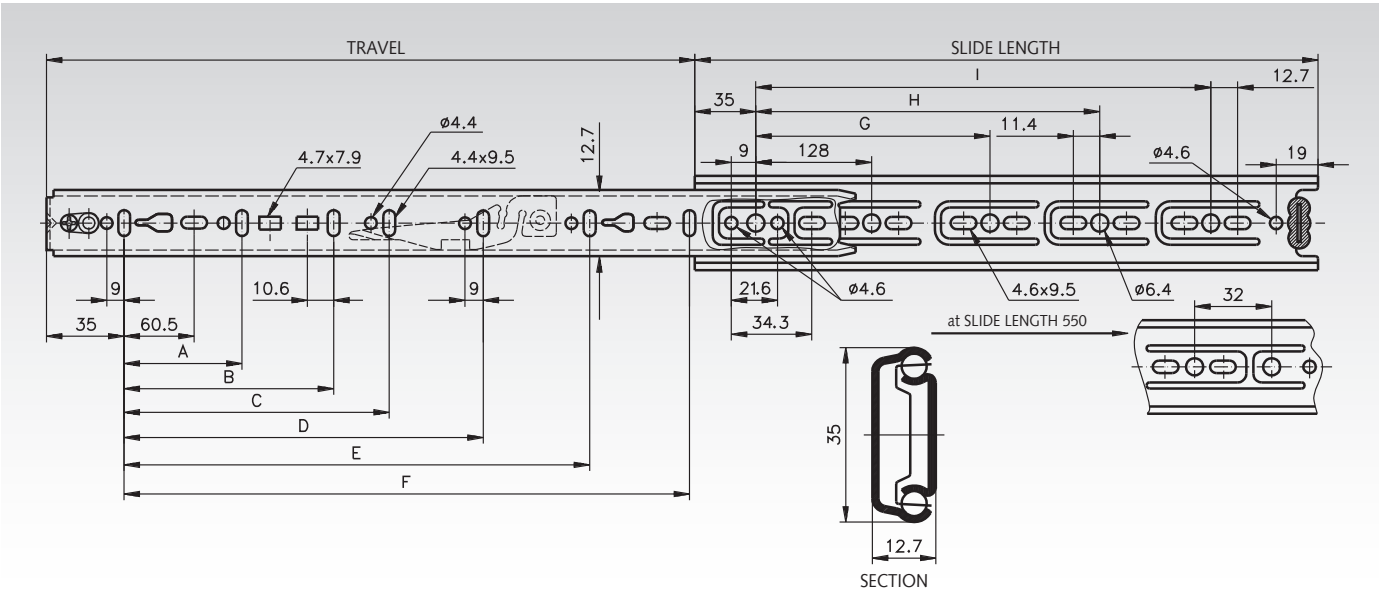

Product No. per Pair DZ - bright	Product No. per Pair DB - black	Slide Length mm	Travel +/-3.2 mm	A mm	B mm	C mm	D mm	E mm	F mm	G mm	H mm	I mm	Load rating[1] per Pair kg	Weight per Pair kg
649 010 25	**649 110 25**	250	163	96	-	-	-	-	192	-	-	-	50 / 35	0,45
649 010 30	**649 110 30**	300	205	96	-	-	-	-	242	224	-	-	50 / 35	0,52
649 010 35	**649 110 35**	350	260	128	-	-	-	-	292	224	-	-	50 / 35	0,64
649 010 40	**649 110 40**	400	281	128	-	-	-	-	342	224	-	320	50 / 35	0,71
649 010 45	**649 110 45**	450	331	128	224	-	-	-	392	224	-	352	48 / 35	0,78
649 010 50	**649 110 50**	500	376	128	224	-	-	-	442	224	-	416	45 / 34	0,80
649 010 55	**649 110 55**	550	415	128	224	320	-	-	492	224	352	-	42 / 32	0,98
649 010 60	**649 110 60**	600	451	128	224	320	-	-	542	224	352	480	40 / 32	1,05
649 010 65	**649 110 65**	650	488	128	224	320	416	544	592	224	352	544	37 / 31	1,17
649 010 70	**649 110 70**	700	526	128	224	288	416	-	642	224	352	544	35 / 30	1,26

[1] At 10,000 / 80,000 cycles.

Note

Recommended mounts: M4 screw.
Use all mounting positions to achieve the max. load rating.

Optional Clip-On Brackets see page 807.

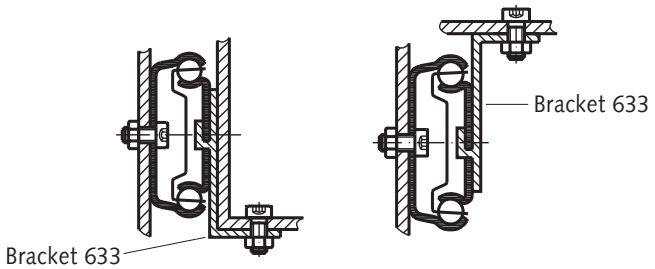

Slides DZ 0204, Width 9.5 mm, to 65 kg, 3/4 Extension

Material:
Slide elements: Cold-rolled steel, bright zinc plated.
Ball retainers: Cold-rolled steel, zinc-plated.
Balls: Hardened steel.

Telescopic ball bearing slides for applications in the industrial and electronics sector.
- Can be mounted on both sides.
- Bracket mount for electrical cabinets on request.
- Fast disconnection.
- Lock-out function.
- Service life 10,000 cycles.

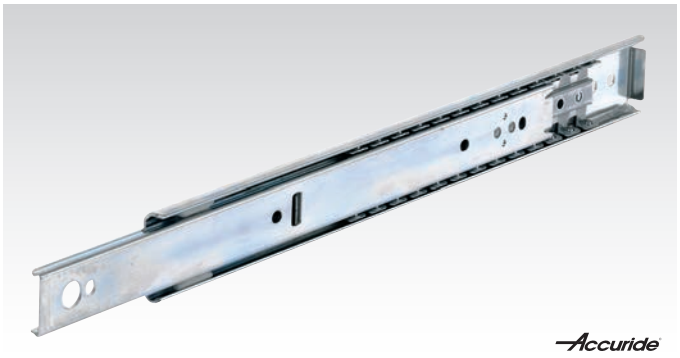

Ordering details: e.g.: Prod. No. 649 002 12, Slides DZ 0204

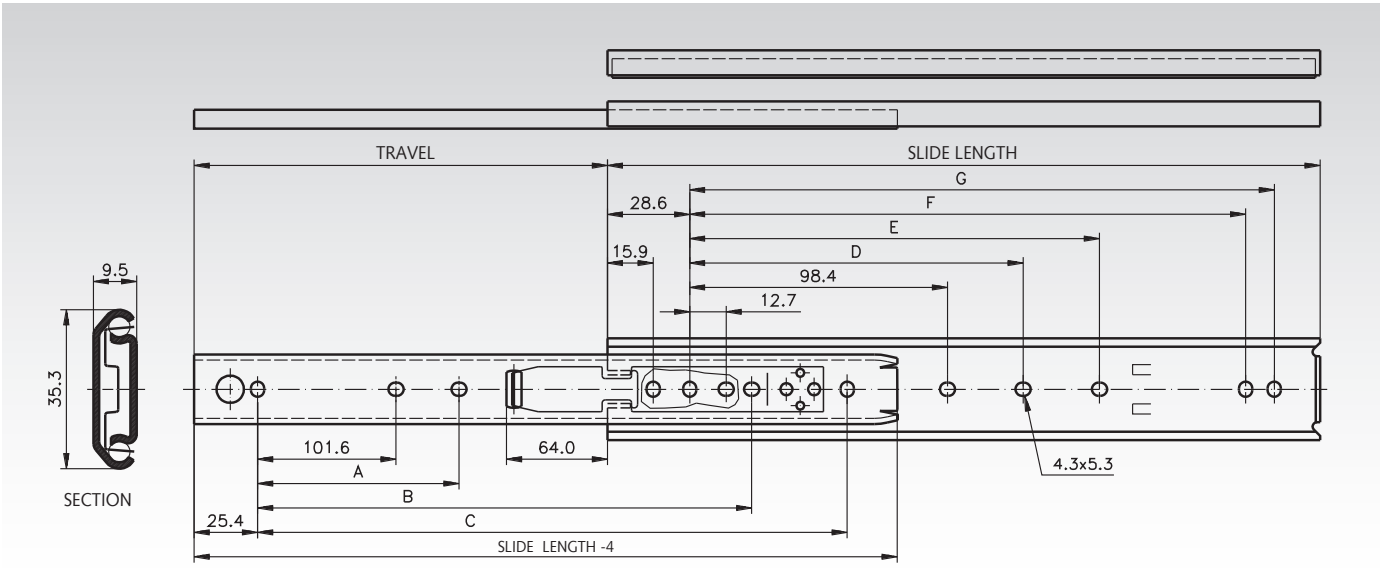

Product No. per Pair	Slide Length mm	Travel +/-3.2 mm	A mm	B mm	C mm	D mm	E mm	F mm	G mm	Load Rating per Pair kg	Weight per Pair kg
649 002 12	305	202	-	215,9	254,0	-	136,5	247,6	260,3	65	0,63
649 002 14	356	253	-	266,7	304,8	-	187,3	298,4	311,1	65	0,73
649 002 16	406	303	-	317,5	355,6	-	238,1	349,2	361,9	60	0,84
649 002 18	457	329	203,2	342,9	406,4	200,0	288,9	400,0	412,7	55	0,93
649 002 20	508	380	228,6	393,7	457,2	225,4	339,7	450,8	463,5	50	1,04
649 002 22	559	405	254,0	419,1	508,0	250,8	390,5	501,6	514,3	40	1,14
649 002 24	610	431	279,4	444,5	558,8	276,2	441,3	552,4	565,1	35	1,26
649 002 26	660	482	304,8	495,3	609,6	301,6	492,1	603,2	615,9	30	1,35
649 002 28	711	507	330,2	520,7	660,4	327,0	542,9	654,0	666,7	30	1,48

Note

Recommended mounts: M4 screw.
Use all mounting positions to achieve the max. load rating.

Slides DS 2028, Width 9.5 mm, to 65 kg, Stainless Steel, 3/4 Extension

Material: Stainless steel 1.4301.

STAINLESS

Telescopic ball bearing slides for applications in the industrial and electronics sector.
- Hold-in in closed position.
- Ideal for environments where mild steel might corrode.
- Service life 10,000 / 80,000 cycles.



Ordering details: e.g.: Prod. No. 649 444 30, Slides DS 2028

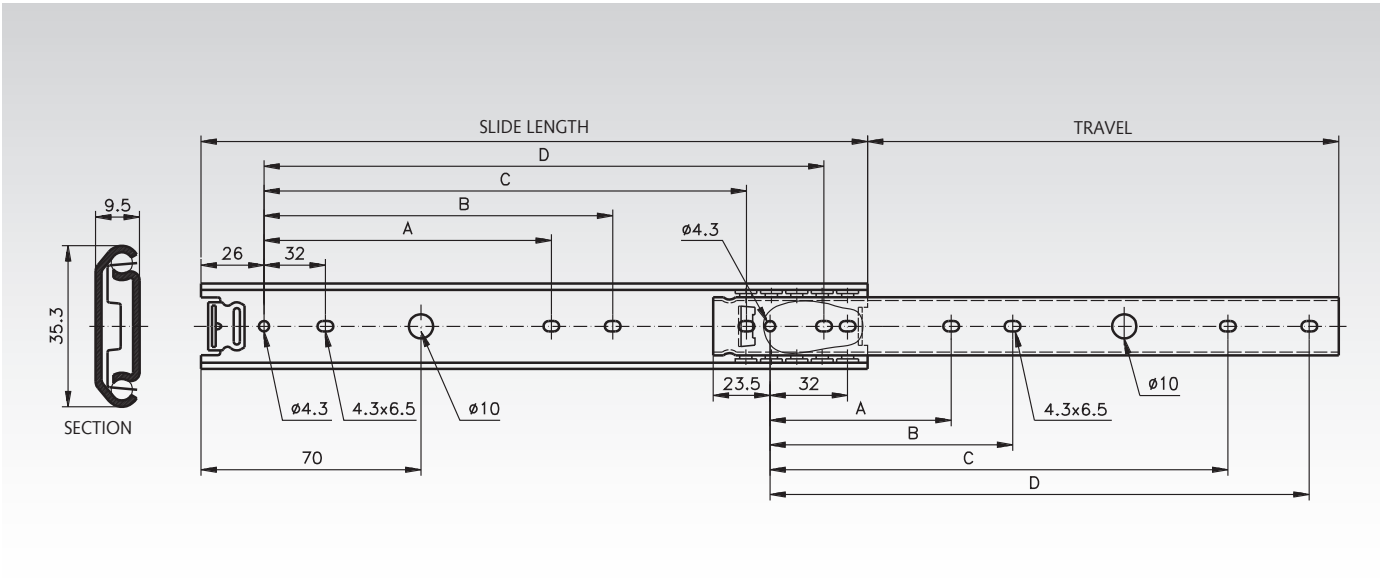

Product No. per Pair	Slide Length mm	Travel +/-3.2 mm	A mm	B mm	C mm	D mm	Load Rating[1] per Pair kg	Weight per Pair kg
649 444 30	300	209	96	128	224	256	65 / 60	0,54
649 444 35	350	245	96	128	256	288	63 / 57	0,64
649 444 40	400	282	160	192	320	352	59 / 54	0,74
649 444 45	450	320	160	192	384	416	57 / 50	0,83
649 444 50	500	357	192	224	416	448	53 / 47	0,92
649 444 55	550	394	192	224	480	512	50 / 45	1,02
649 444 60	600	432	224	256	512	544	46 / 43	1,12
649 444 65	650	469	224	256	576	608	43 / 41	1,21
649 444 70	700	506	256	288	608	640	42 / 40	1,30

[1] At 10,000 / 80,000 cycles.

Note

Recommended mounts: M4 screw.
Use all mounting positions to achieve the max. load rating.

Slides DA 4120, width 36 mm, up to 555 kg, partial extension

Material:
Slide elements: Aluminium, corrosion resistant.
Ball retainers and Balls: Stainless Steel.

Heavy Duty Telescopic ball bearing slides for applications in the industrial and electronics sector.
- Single slides available (universal).
- Very high load capacity up to 438 kg.
- Good corrosion resistance.
- Service life 5,000 / 10,000 cycles.

Note: Sold singly.



Accuride

Ordering Details: e.g.: 2 Pieces Prod.-No. 649 070 40, Slide DA 4120

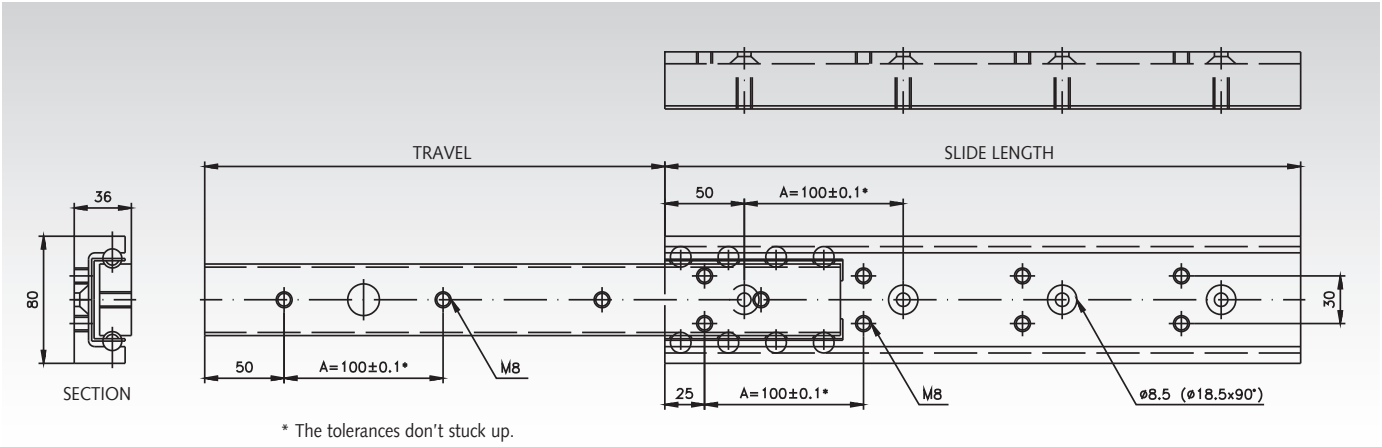

* The tolerances don't stuck up.

Product No. per piece	Slide length mm	Travel +/-3.2 mm	A mm	Load Rating[1] per pair kg	Load Rating[2] per pair kg	Load Rating[3] per pair kg	Weight piece kg
649 070 40	400	290	100 (3x)	460	370	185	2,35
649 070 50	500	360	100 (4x)	480	390	195	2,93
649 070 60	600	430	100 (5x)	490	400	200	3,53
649 070 70	700	501	100 (6x)	500	410	205	4,11
649 070 80	800	572	100 (7x)	510	420	210	4,68
649 070 90	900	642	100 (8x)	520	425	212	5,30
649 071 00	1000	713	100 (9x)	530	430	215	5,83
649 071 10	1100	783	100 (10x)	540	434	217	6,40
649 071 20	1200	853	100 (11x)	550	438	219	6,95

[1] At 5,000 cycles.
[2] At 10,000 cycles.
[3] At 10,000 cycles, horizontal mount.

Note

Recommended fastening: M8 screw.
Use all mounting positions to achieve the max. load rating.
End stops are tested for 10 cycles with 400 kg at 0.8 m/s.
Additional external end stops are recommended.
The load capacity was tested with 10,000 cycles at a slide spacing of 600mm. Larger spacings require more stiffness of the sliding part and adequate parallelism.

Slides DZ 2601, Width 12.7 mm, to 45 kg, Compact Profile, Full extension

Material:
Slide elements: Cold-rolled steel, bright zinc plated.
Ball retainers: Cold-rolled, zinc-plated steel.
Balls: Hardened steel.

Telescopic ball bearing slides for applications in the industrial and electronics sector.
- Very compact profile.
- Universal hole pattern.
- Noise dampening of all end stops.
- Hold-in in closed position.
- Can be mounted on both sides.
- Service life 80,000 cycles.

Ordering details: e.g.: Prod. No. 649 006 20, Slides DZ 2601



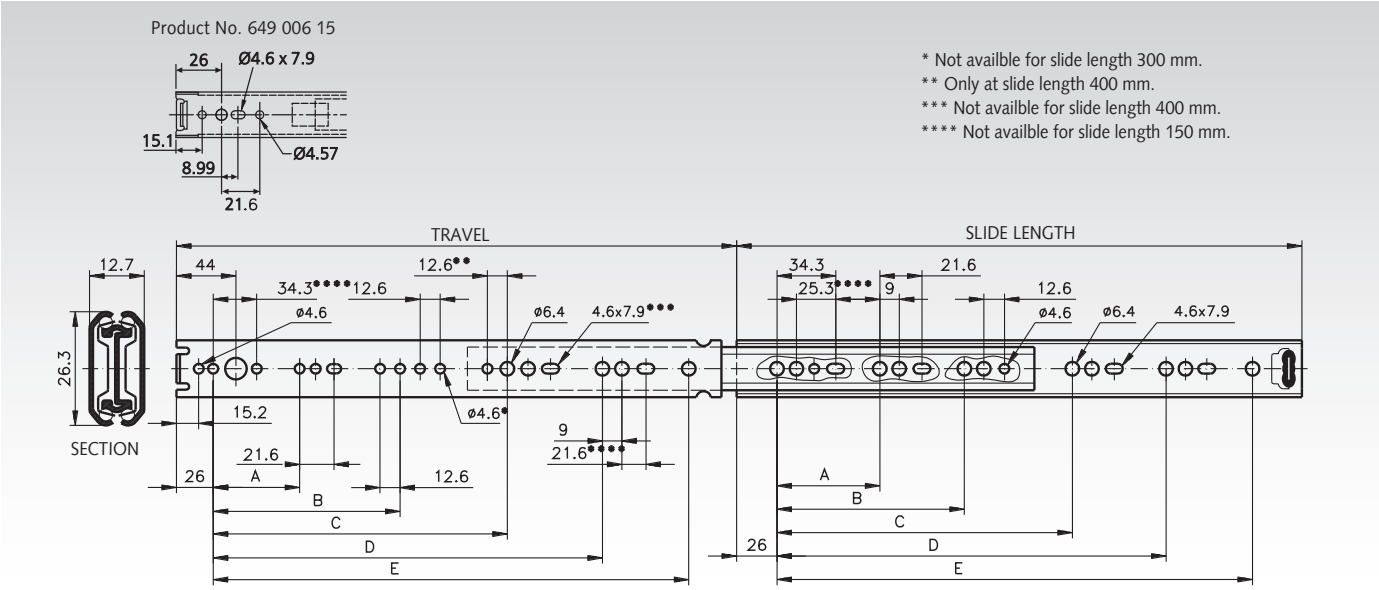

Product No. per Pair	Slide Length mm	Travel +/-3.2 mm	A mm	B mm	C mm	D mm	E mm	Load Rating per Pair kg	Weight per Pair kg
649 006 15	150	148	78	-	-	-	-	12	0,32
649 006 20	200	209	128	-	-	-	-	16	0,44
649 006 25	250	259	128	-	-	-	-	25	0,55
649 006 30	300	308	128	224	-	-	-	32	0,67
649 006 35	350	357	128	224	-	-	-	35	0,78
649 006 40	400	406	128	224	320	-	-	45	0,89
649 006 45	450	456	128	224	352	-	-	45	1,01
649 006 50	500	505	128	224	352	416	-	35	1,11
649 006 55	550	554	128	224	352	448	489	30	1,23

Note

Recommended mount: M4 screw/6mm Euro screw/4mm wood screw. Max. head. height 2mm/Ø7.8mm.
Use all mounting positions to achieve the max. load rating.
The load capacity was tested with 80,000 cycles at a slide spacing of 450mm.
Horizontal mounting is not recommended.

Selection Tool
on the Internet at **www.maedler.de**
in the section **MÄDLER®-Tools**

Slides DZ 2642, Width 12.7 mm, to 45 kg, Compact Profile, Full Extension

Material:
Slide elements: Cold-rolled steel, bright zinc plated.
Ball retainers: Cold-rolled steel, zinc-plated.
Balls: Hardened steel.

Telescopic ball bearing slides for applications in the industrial and electronics sector.
- Low slide profile.
- Groove or side mounting option.
- Hold-in in closed position.
- Very high service life 80,000 cycles.



Ordering details: e.g.: Prod. No. 649 008 20, Slides DZ 2642

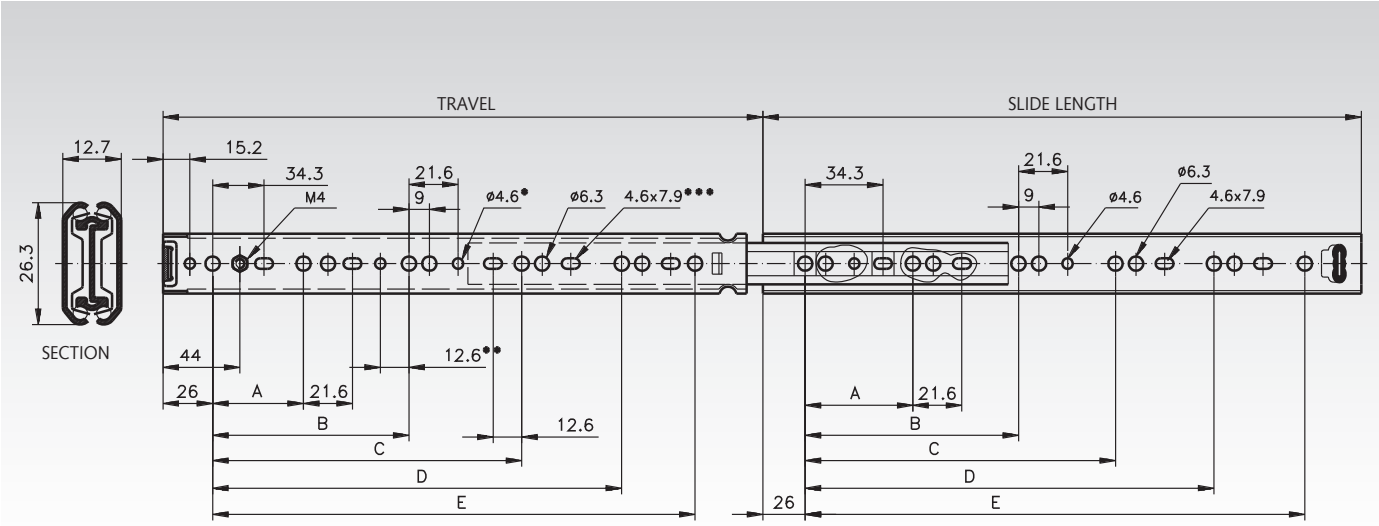

* Not availble for slide length 300 mm.
** Only at slide length 400 mm.
*** Not availble for slide length 400 mm.

Product No. per Pair	Slide Length mm	Travel +/-3.2 mm	A mm	B mm	C mm	D mm	E mm	Load Rating per Pair kg	Weight per Pair kg
649 008 20	200	209	128	-	-	-	-	16	0,44
649 008 25	250	259	128	-	-	-	-	25	0,55
649 008 30	300	308	128	224	-	-	-	32	0,67
649 008 35	350	357	128	224	-	-	-	35	0,78
649 008 40	400	406	128	224	320	-	-	45	0,89
649 008 45	450	456	128	224	352	-	-	45	1,01
649 008 50	500	505	128	224	352	416	-	35	1,11
649 008 55	550	554	128	224	352	448	489	30	1,23

Note

Recommended mount: M4 screw/6mm Euro screw/4mm wood screw. Max. head. height 2mm/ Ø7.8mm.
Use all mounting positions to achieve the max. load rating.
Horizontal mounting is not recommended.



Slides DZ 3732, width 12.7 mm, up to 40 kg, full extension

Material:
Slide elements: Cold rolled steel, bright zinc-plated.
Ball retainers: Plastic / zinc-plated steel.
Balls: Hardened steel.

Telescopic precision ball bearing slides for applications in the industrial and electronics sector.
- Fast Disconnect.
- Hold In.
- Optional Clip-On Brackets (page 807).
- Very high service life up to 80,000 cycles.



Ordering Details: e.g.: Product No. 649 009 30, Slides DZ 3732

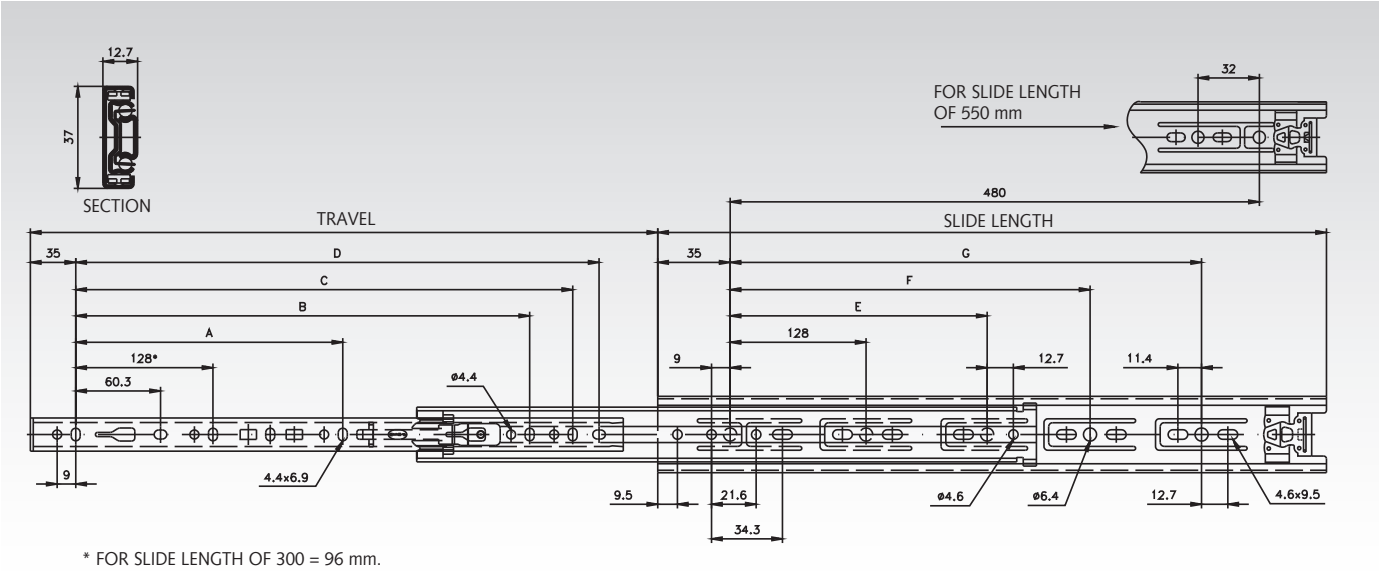

* FOR SLIDE LENGTH OF 300 = 96 mm.

Product No. per pair	Slide length mm	Travel +/-3.2 mm	A mm	B mm	C mm	D mm	E mm	F mm	G mm	Load Rating Pair kg	Weight Pair kg
649 009 30	300	292	-	-	-	230,8	224	-	-	40	0,77
649 009 35	350	356	-	-	-	280,8	224	-	-	40	0,87
649 009 40	400	406	-	-	-	330,8	224	-	320	40	0,99
649 009 45	450	457	-	320	-	380,8	224	-	352	40	1,11
649 009 50	500	508	-	320	-	430,8	224	-	416	40	1,25
649 009 55	550	559	-	320	416	480,8	224	352	-	40	1,37
649 009 60	600	610	224	416	-	530,8	224	352	480	40	1,50
649 009 65	650	660	224	416	544	580,8	224	352	544	40	1,63

Note

Recommended fastening: M4 screw.
Use all mounting positions to achieve the max. load rating.
Horizontal mounting is not recommended.
The load capacity was tested with 80,000 cycles at a slide spacing of 450mm.

Optional Clip-On Brackets see page 807.

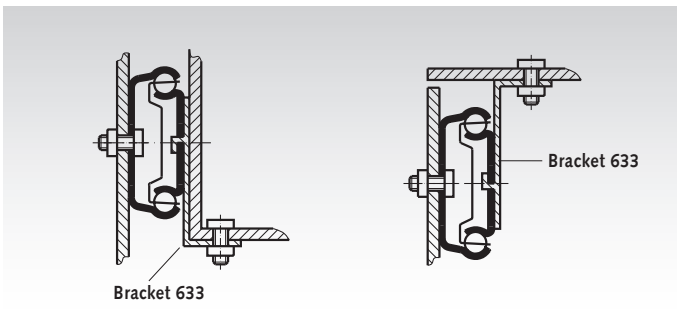

Slides DZ 3832, Width 12.7 mm, to 50 kg, Full Extension

Material:
Slide elements: Cold-rolled steel, bright zinc plated.
Ball retainers: Plastic / zinc-plated steel.
Balls: Hardened steel.

Telescopic ball bearing slides for applications in the industrial and electronics sector.
- Fast disconnection.
- Hold-in in closed position.
- Can be mounted on both sides.
- Cam drawer adjust (3.1 mm).
- Optional clip-on bracket (page 807).
- Service life 10,000 / 80,000 cycles.

Ordering Details: e.g.: Product No. 649 012 15, Slides DZ 3832



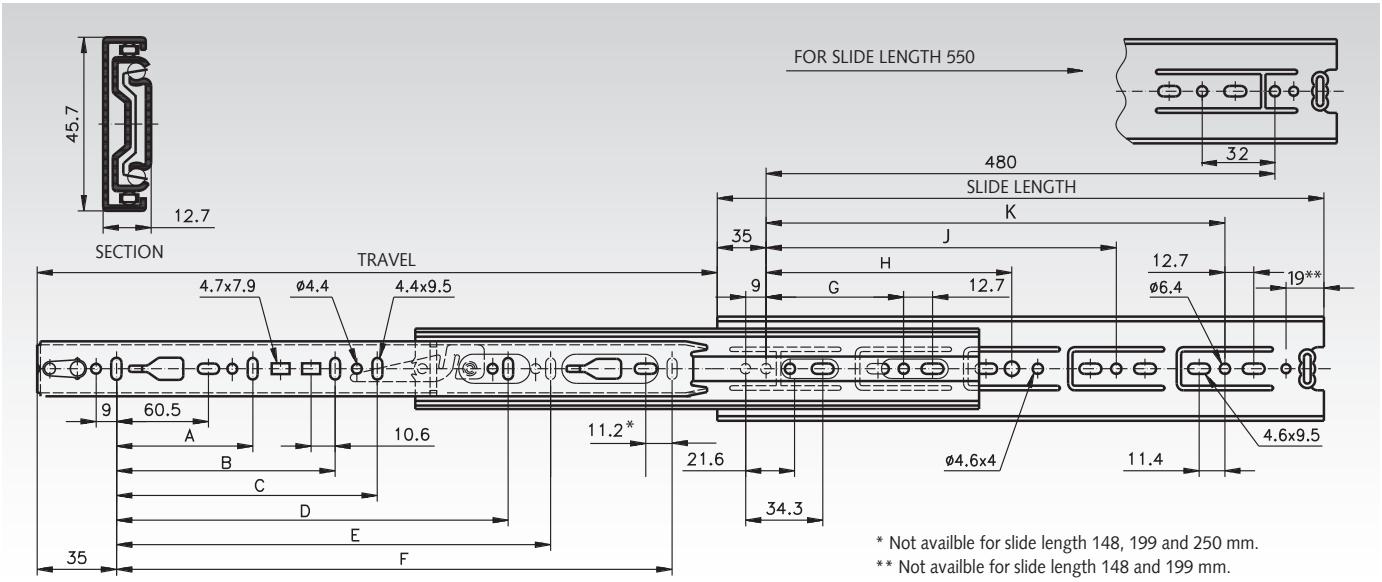

* Not availble for slide length 148, 199 and 250 mm.
** Not availble for slide length 148 and 199 mm.

Product No. per Pair	Slide Length mm	Travel +/-3.2 mm	Load Rating[1] per Pair kg	Weight per Pair kg
649 012 15	148	140	45 / 39	0,44
649 012 20	199	203	46 / 40	0,60
649 012 25	250	243	47 / 41	0,76
649 012 30	300	305	48 / 42	0,90
649 012 35	350	356	49 / 43	1,06
649 012 40	400	406	50 / 44	1,22
649 012 45	450	457	50 / 45	1,36
649 012 50	500	508	50 / 45	1,52
649 012 55	550	559	50 / 45	1,68
649 012 60	600	610	50 / 45	1,85
649 012 65	650	660	49 / 44	2,00
649 012 70	700	711	48 / 43	2,15

Optional Clip-On Brackets see page 807.

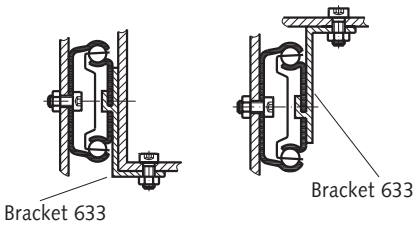

[1] At 10,000 / 80,000 cycles.

Slide Length mm	Travel +/-3.2 mm	A mm	B mm	C mm	D mm	E mm	F mm	G mm	H mm	J mm	K mm
148	140	96	-	-	-	-	-	77,2	-	-	-
199	203	128	-	-	-	-	141	128	-	-	-
250	243	96	-	-	-	-	192	128	-	-	-
300	305	96	-	-	-	-	242	128	224	-	-
350	356	128	-	-	-	-	292	128	224	-	-
400	406	128	-	-	-	-	342	128	224	320	-
450	457	128	-	-	320	-	392	128	224	352	-
500	508	128	-	-	320	-	442	128	224	416	-
550	559	128	-	-	320	416	492	128	224	352	448
600	610	128	224	-	416	-	542	128	224	352	480
650	660	128	224	-	416	544	592	128	224	352	544
700	711	128	224	288	416	544	642	128	224	352	544

Note

Recommended mounts: M4 screw.
Use all mounting positions to achieve the max. load rating.

Horizontal mounting not recommended.

Slides DH 3832, Corrosion Proof, Width 12.7 mm, to 50 kg, Full Extension

Material: Slide elements: Cold-rolled steel, special zinc plating.
Ball retainers: Plastic / stainless steel. Balls: Stainless steel.

Telescopic ball bearing slides for applications in the industrial and electronics sector.

- Corrosion proof for rough environments.
- 8 times better protection than with zinc-plated surface finish.
- Ball retainers, balls and rivets made from stainless steel.
- Hold-in in closed position.
- Fast disconnection.
- Cam drawer adjust (3.1 mm).
- Service life 10,000 / 80,000 cycles.



Ordering details: e.g.: Prod. No. 649 312 25, Slides DH 3832

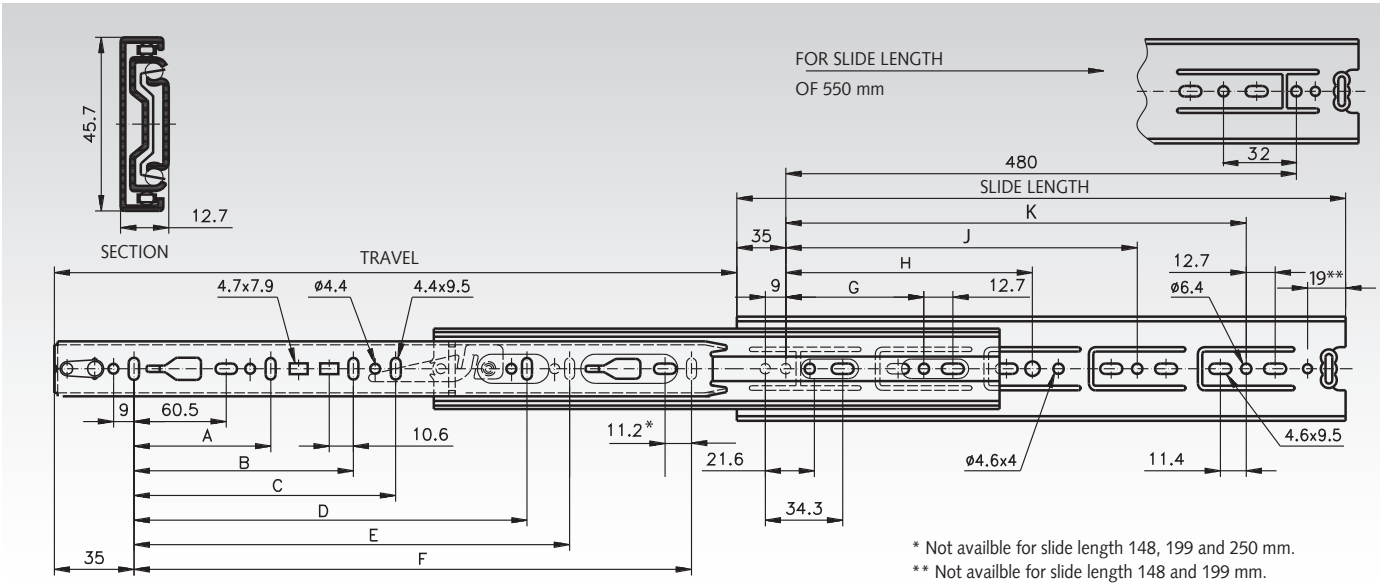

* Not availble for slide length 148, 199 and 250 mm.
** Not availble for slide length 148 and 199 mm.

Product No. per Pair	Slide Length mm	Travel +/-3.2 mm	A mm	B mm	C mm	D mm	E mm	F mm	G mm	H mm	J mm	K mm	Load Rating[1] per Pair kg	Weight per Pair kg
649 312 15	148	140	96	-	-	-	-	-	77,2	-	-	-	45 / 39	0,43
649 312 20	199	203	128	-	-	-	-	141	128	-	-	-	46 / 40	0,61
649 312 25	250	243	96	-	-	-	-	192	128	-	-	-	47 / 41	0,76
649 312 30	300	305	96	-	-	-	-	242	128	224	-	-	48 / 42	0,90
649 312 35	350	356	128	-	-	-	-	292	128	224	-	-	49 / 43	1,06
649 312 40	400	406	128	-	-	-	-	342	128	224	320	-	50 / 44	1,21
649 312 45	450	457	128	-	-	320	-	392	128	224	352	-	50 / 45	1,36
649 312 50	500	508	128	-	-	320	-	442	128	224	416	-	50 / 45	1,51
649 312 55	550	559	128	-	-	320	416	492	128	224	352	448	50 / 45	1,67
649 312 60	600	610	128	224	-	416	-	542	128	224	352	480	50 / 45	1,85
649 312 65	650	660	128	224	-	416	544	592	128	224	352	544	49 / 44	1,98
649 312 70	700	711	128	224	288	416	544	642	128	224	352	544	48 / 43	2,15

[1] At 10,000 / 80,000 cycles.

Note

Recommended mounts: M4 screw.
Use all mounting positions to achieve the max. load rating.
Horizontal mounting not recommended.

Selection Tool
on the Internet at **www.maedler.de**
in the section **MÄDLER®-Tools**

Slides DZ 3832 TR, width 12.7 mm, up to 45 kg, full extension, Touch Release

Material:
Slide elements: Cold rolled steel, bright zinc-plated.
Ball retainers: Plastic / zinc-plated steel.
Balls: Hardened steel.

Telescopic precision ball bearing slides for applications in the industrial and electronics sector.
- Operation by pressing on the drawer. (Grip or knob not required).
- Fast Disconnect.
- Hold-in in the closed position.
- Setting cams for drawer (3.1 mm).
- Very high service life up to 80,000 cycles.

Required compressive force approx. 50 N.



Touch Release - Opens by pressing, for drawers completely without grip or knob.

Ordering Details: e.g.: Product No. 649 013 30, Slides DZ 3832 TR

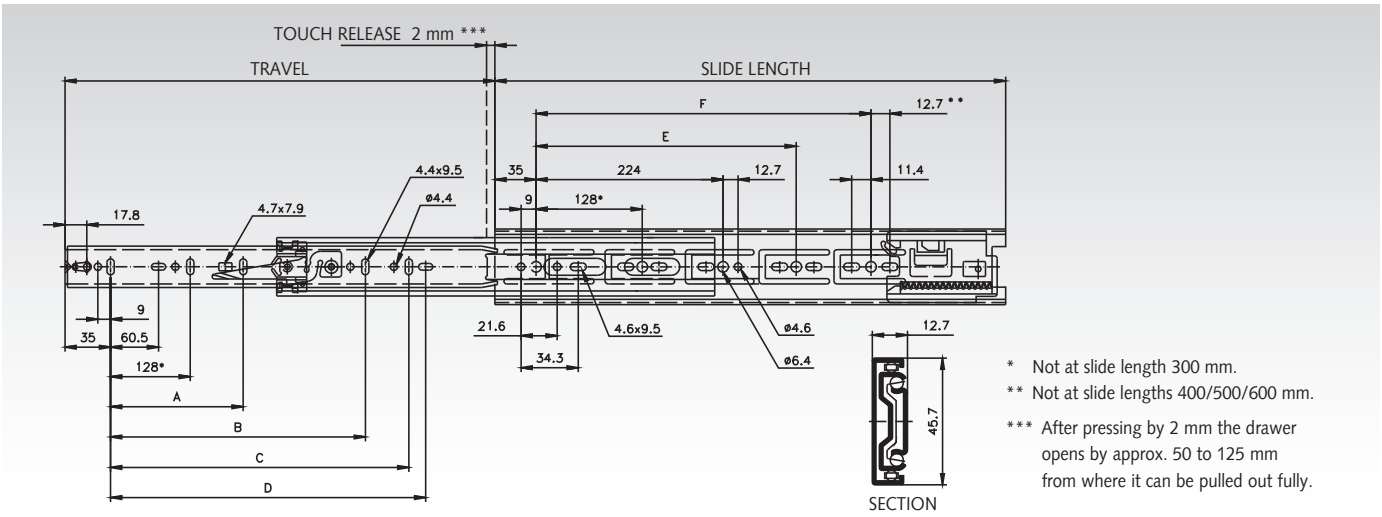

* Not at slide length 300 mm.
** Not at slide lengths 400/500/600 mm.
*** After pressing by 2 mm the drawer opens by approx. 50 to 125 mm from where it can be pulled out fully.

Product No. per pair	Slide length mm	Travel +/-3,2 mm	A mm	B mm	C mm	D mm	E mm	F mm	Load Rating per Pair kg	Weight per Pair kg
649 013 30	300	305	-	-	-	192	-	-	42	0,83
649 013 35	350	356	-	-	-	242	-	-	43	0,98
649 013 40	400	406	-	-	-	292	288	-	44	1,13
649 013 45	450	457	-	320	-	342	320	-	45	1,31
649 013 50	500	508	-	320	-	392	384	-	45	1,47
649 013 55	550	559	224	416	-	442	416	-	45	1,62
649 013 60	600	610	224	416	-	492	352	480	45	1,75
649 013 65	650	660	224	416	512	542	352	512	44	1,89
649 013 70	700	711	224	416	512	592	352	544	43	2,06

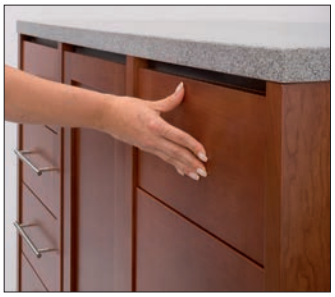





Note

Recommended fastening: M4 screw. Use all mounting positions.
The drawer may not be wider than the slide length. Horizontal mounting is not possible.

Slides DZ 3832 SC, Width 12.7 mm, to 50 kg, Full Extension, Self Close

Material:
Slide elements: Cold-rolled steel, bright zinc plated.
Ball retainers: Plastic / zinc-plated steel. Balls: Hardened steel.

Telescopic ball bearing slides for applications in the industrial and electronics sector.
- Fast disconnection.
- Hold-in in closed position.
- Cam drawer adjust (3.1 mm).
- Optional clip-on brackets for bottom or platform mounting (page 807).
- Service life 10,000 / 80,000 cycles.

Closing/opening force 14 - 27 N per slide.



Ordering details: e.g.: Prod. No. 649 014 30, Slides DZ 3832 SC

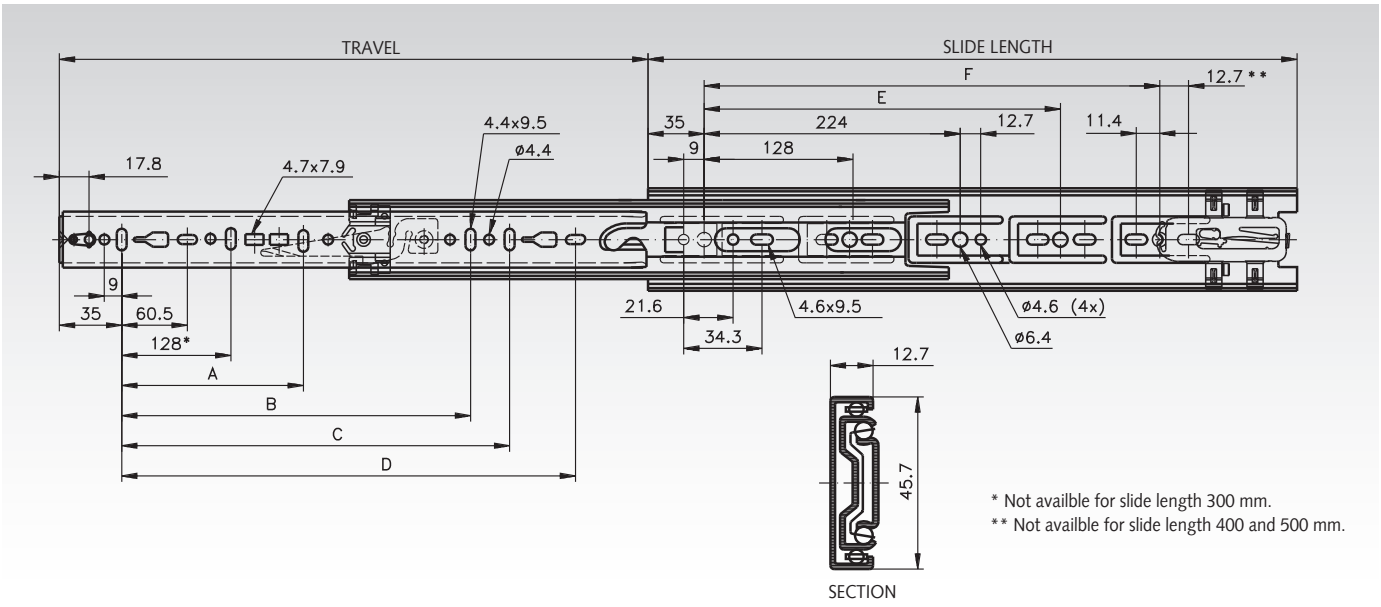

Product No. per Pair	Slide length mm	Travel +/-3.2 mm	A mm	B mm	C mm	D mm	E mm	F mm	Load Rating[1] per Pair kg	Weight per Pair kg
649 014 30	300	286	-	-	-	231	-	-	48 / 42	0,90
649 014 35	350	356	-	-	-	281	-	-	49 / 43	1,04
649 014 40	400	406	-	-	-	331	288	-	50 / 44	1,20
649 014 45	450	457	-	320	-	381	320	-	50 / 45	1,33
649 014 50	500	508	-	-	-	431	384	-	50 / 45	1,50
649 014 55	550	559	-	416	-	481	416	-	50 / 45	1,67
649 014 60	600	610	224	416	-	531	352	480	50 / 45	1,82
649 014 65	650	660	224	416	544	581	352	512	49 / 44	1,96

[1] At 10,000 / 80,000 cycles.

Note

Recommended mounts: M4 screw. Use all mounting positions to achieve the max. load rating. Horizontal mounting not recommended. Clip-on brackets see page 807.

Slides DZ 3832 DO, Width 12.7 mm, to 50 kg, Full Extension with Hold-In and Hold-Out

Material:
Slide elements: Cold-rolled steel, bright zinc plated.
Ball retainers: Plastic / zinc-plated steel.
Balls: Hardened steel.

Telescopic ball bearing slides for applications in the industrial and electronics sector.
- Fast disconnection.
- Hold-in and hold-out.
- Can be mounted on either side.
- Cam drawer adjust (3.1 mm).
- Optional clip-on bracket (page 807).
- Service life 10,000 / 80,000 cycles.



Ordering details: e.g.: Prod. No. 649 018 25, Slides DZ 3832 DO

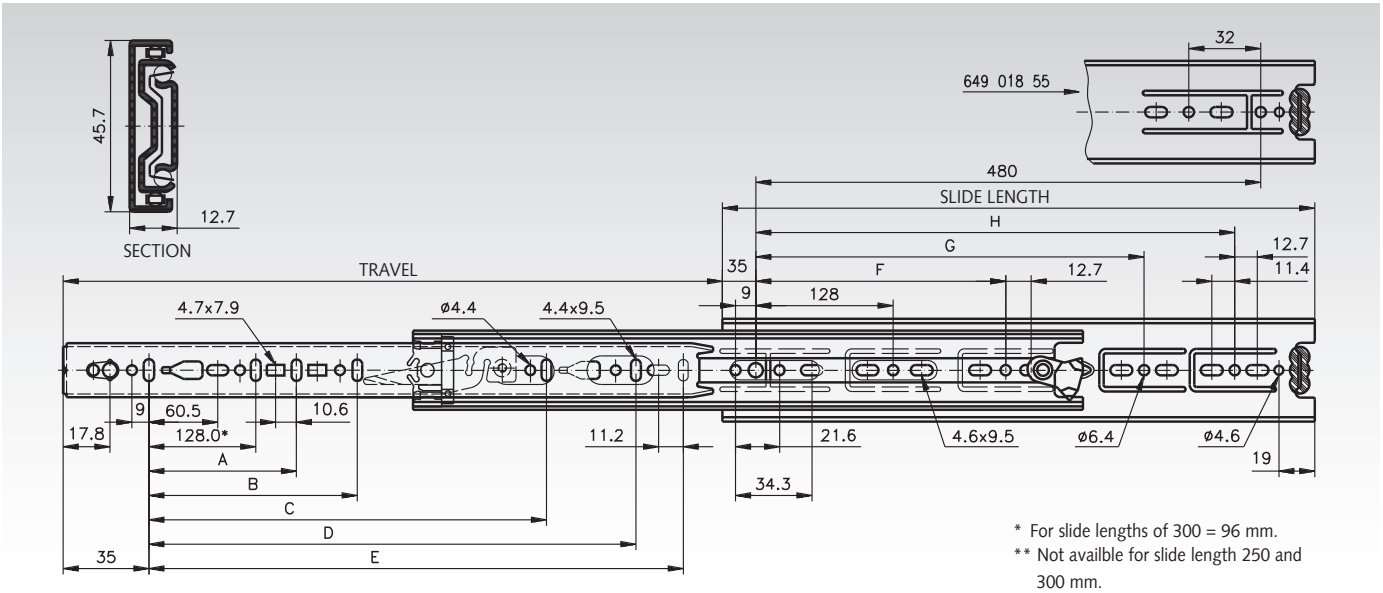

* For slide lengths of 300 = 96 mm.
** Not availble for slide length 250 and 300 mm.

Product No. per Pair	Slide Length mm	Travel +/-3.2 mm	A mm	B mm	C mm	D mm	E mm	F mm	G mm	H mm	Load Rating[1] per Pair kg	Weight per Pair kg
649 018 25	250	243	-	-	-	-	192	-	-	-	47 / 41	0,77
649 018 30	300	305	-	-	-	-	242	224	-	-	47 / 41	0,91
649 018 35	350	356	-	-	-	-	292	224	-	-	48 / 42	1,07
649 018 40	400	406	-	-	-	-	342	224	320	-	49 / 43	1,21
649 018 45	450	457	-	-	320	-	392	-	352	-	50 / 44	1,37
649 018 50	500	508	-	-	320	-	442	-	416	-	50 / 45	1,53
649 018 55	550	559	-	-	320	416	492	-	352	-	50 / 45	1,68
649 018 60	600	610	224	-	416	-	542	224	352	480	50 / 45	1,86
649 018 65	650	660	224	-	416	544	592	224	352	554	49 / 44	1,97
649 018 70	700	711	224	288	416	544	642	224	352	554	48 / 43	2,17

[1] At 10,000 / 80,000 cycles.

Note

Recommended mounts: M4 screw.
Use all mounting positions to achieve the max. load rating.
Horizontal mounting not recommended.

Optional Clip-On Brackets see page 807.

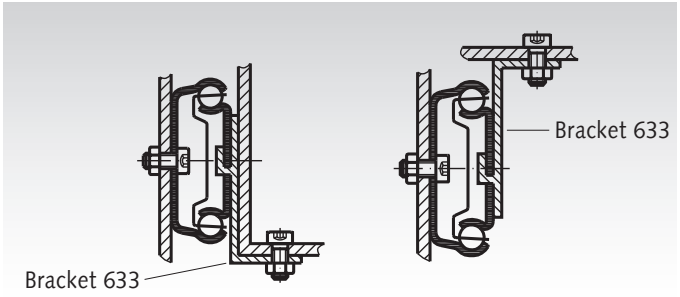

Slides DA 5321, width 19.1 mm, up to 50 kg, Over-Extension

Material:
Slide elements: Aluminium.
Ball retainers and Balls: Stainless Steel.

Telescopic precision ball bearing slides for applications in the industrial and electronics sector.
- Hold-in in the closed position.
- Mounting bracket for electronic cabinets on request.
- Service life 40,000 cycles.



Ordering Details: e.g.: Product No. 649 045 30, Slides DA 5321

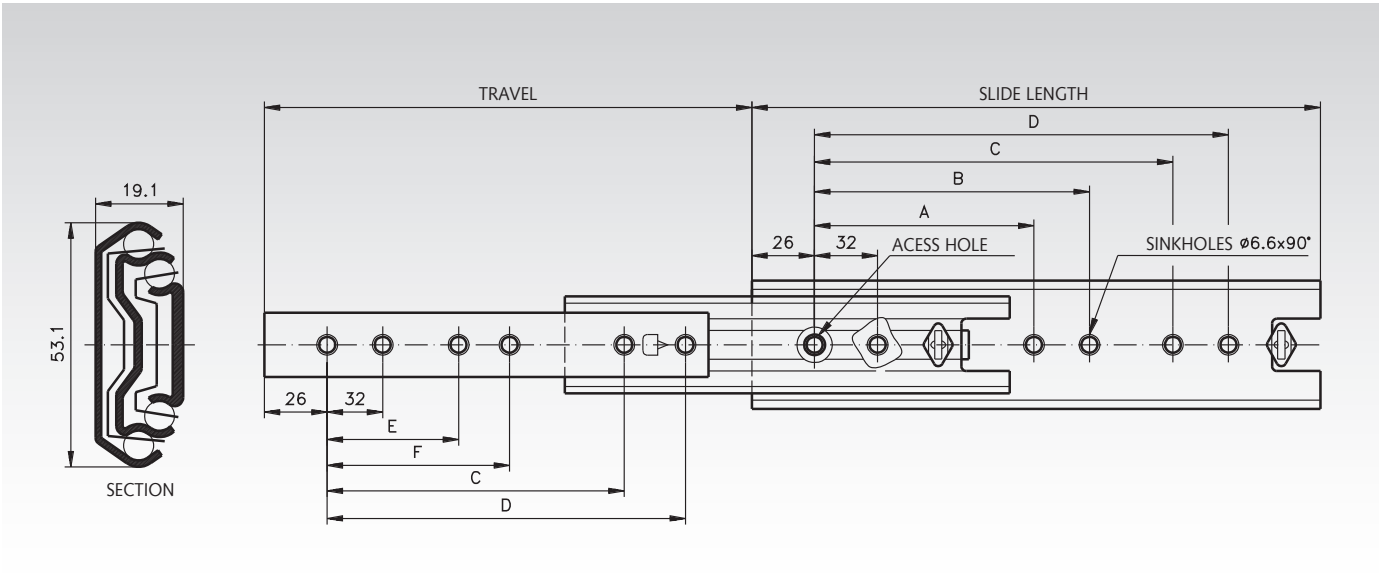

Product No. per Pair	Slide length mm	Travel +/-3.2 mm	A mm	B mm	C mm	D mm	E mm	F mm	Load Rating per Pair kg	Weight per Pair kg
649 045 30	300	324	-	-	192	224	-	-	40	0,72
649 045 35	350	374	-	-	224	256	-	-	43	0,86
649 045 40	400	424	160	192	288	320	128	160	45	0,98
649 045 45	450	474	160	192	320	352	128	160	48	1,11
649 045 50	500	524	192	224	384	416	160	192	50	1,24
649 045 55	550	574	192	224	416	448	160	192	50	1,37
649 045 60	600	624	256	288	480	512	192	256	50	1,50
649 045 65	650	674	256	288	544	576	192	256	50	1,62
649 045 70	700	724	288	320	576	608	256	288	50	1,76
649 045 80	790	804	352	384	672	704	320	352	40	2,00

Note

Recommended fastening: M5 countersunk/ 6mm countersunk Euro screw.
Use all mounting positions to achieve the max. load rating.

Attention: Vertical (side) mounting only.
The load capacity was tested at a slide spacing of 450mm.

Selection Tool
on the Internet at **www.maedler.de**
in the section **MÄDLER®-Tools**

Slides DZ 2907, Width 9.6 mm, to 55 kg, Over Extension

Material:
Slide elements: Cold-rolled steel, bright zinc plated.
Ball retainers: Plastic / zinc-plated steel.
Balls: Hardened steel.

Telescopic ball bearing slides for applications in the industrial and electronics sector.
- Locks in open position.
- Fast disconnection.
- Bracket mount for electrical cabinets on request.
- Mounting accessories included.
- Service life 10,000 cycles.



Ordering details: e.g.: Prod. No. 649 022 12, Slides DZ 2907

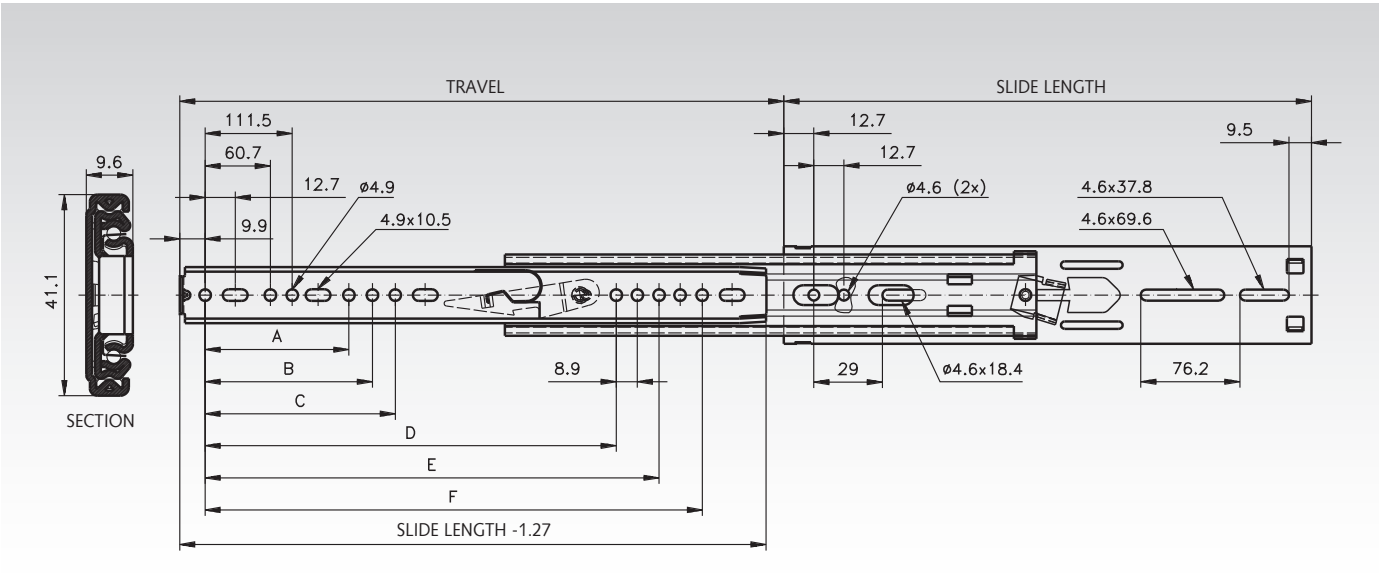

Product No. per Pair	Slide Length mm	Travel +/-3.2 mm	A mm	B mm	C mm	D mm	E mm	F mm	Load Rating per Pair kg	Weight per Pair kg
649 022 12	305	356	-	-	-	-	-	235,0	30	0,84
649 022 14	356	406	-	-	-	-	-	285,8	35	1,00
649 022 16	406	457	162,6	-	-	-	-	336,5	45	1,13
649 022 18	457	508	-	-	164,8	314,3	-	387,3	50	1,27
649 022 20	508	559	-	172,1	203,2	356,2	-	438,1	55	1,42
649 022 22	559	610	-	-	213,0	407,0	-	488,9	55	1,55
649 022 24	610	660	254,0	273,7	-	-	457,8	539,7	50	1,71
649 022 26	660	711	140,3	232,4	269,1	416,6	508,6	590,5	50	1,87
649 022 28	711	762	191,1	283,2	304,8	467,4	559,4	641,4	50	2,00
649 022 30	762	813	-	241,9	319,9	518,2	610,2	692,1	50	2,16

Note

Recommended mounts: M4 screw.
Use all mounting positions to achieve the max. load rating.



Slides DS 0330, Width 19.1 mm, to 80 kg, Stainless Steel, Full Extension

Material:
Stainless steel 1.4301.

Telescopic ball bearing slides for applications in the industrial and electronics sector.
- Hold-in in closed position.
- Can be mounted on both sides.
- Service life 10,000 / 80,000 cycles.



Ordering details: e.g.: Prod. No. 649 446 30, Slides DS 0330

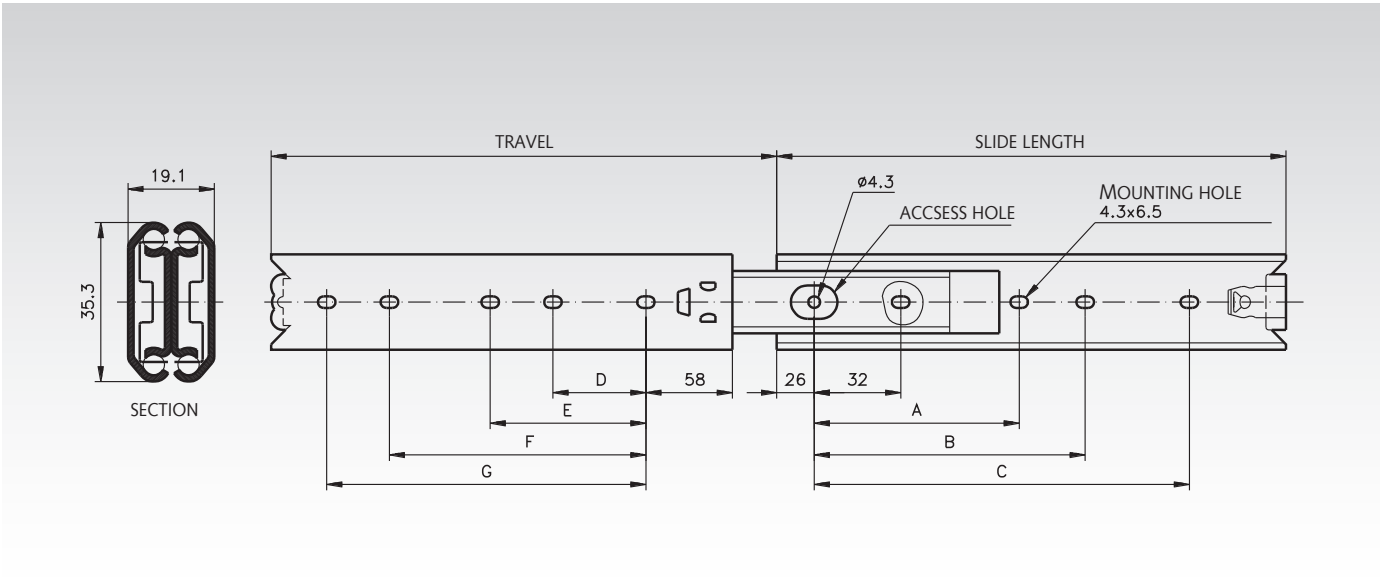

Product No. per Pair	Slide Length mm	Travel +/-3.2 mm	A mm	B mm	C mm	D mm	E mm	F mm	G mm	Load Rating[1] per Pair kg	Weight per Pair kg
649 446 30	300	305	-	192	242	-	-	192	224	65 / 50	1,08
649 446 35	350	354	-	224	256	-	-	224	256	70 / 55	1,29
649 446 40	400	403	-	192	320	160	-	288	320	75 / 60	1,48
649 446 45	450	452	-	224	352	192	-	320	352	80 / 65	1,66
649 446 50	500	501	256	288	416	224	256	384	416	75 / 57	1,86
649 446 55	550	550	288	320	480	256	288	416	448	70 / 50	2,07
649 446 60	600	600	320	352	512	288	320	480	512	65 / 45	2,26
649 446 70	700	698	352	384	608	320	352	576	608	55 / 30	2,67

[1] At 10,000 / 80,000 cycles.

Note

Recommended mounts: M4 screw.
Use all mounting positions to achieve the max. load rating.

Slides DZ 3301, Width 12.7 mm, to 68 kg, Over Extension

Material:
Slide elements: Cold-rolled steel, bright zinc plated.
Ball retainers: Cold-rolled steel, zinc-plated.
Balls: Hardened steel.

Telescopic ball bearing slides for applications in the industrial and electronics sector.
- Hold-in in closed position.
- Bracket mount for electrical cabinets on request.
- Service life 10,000 cycles.



Ordering details: e.g.: Prod. No. 649 028 12, Slides DZ 3301

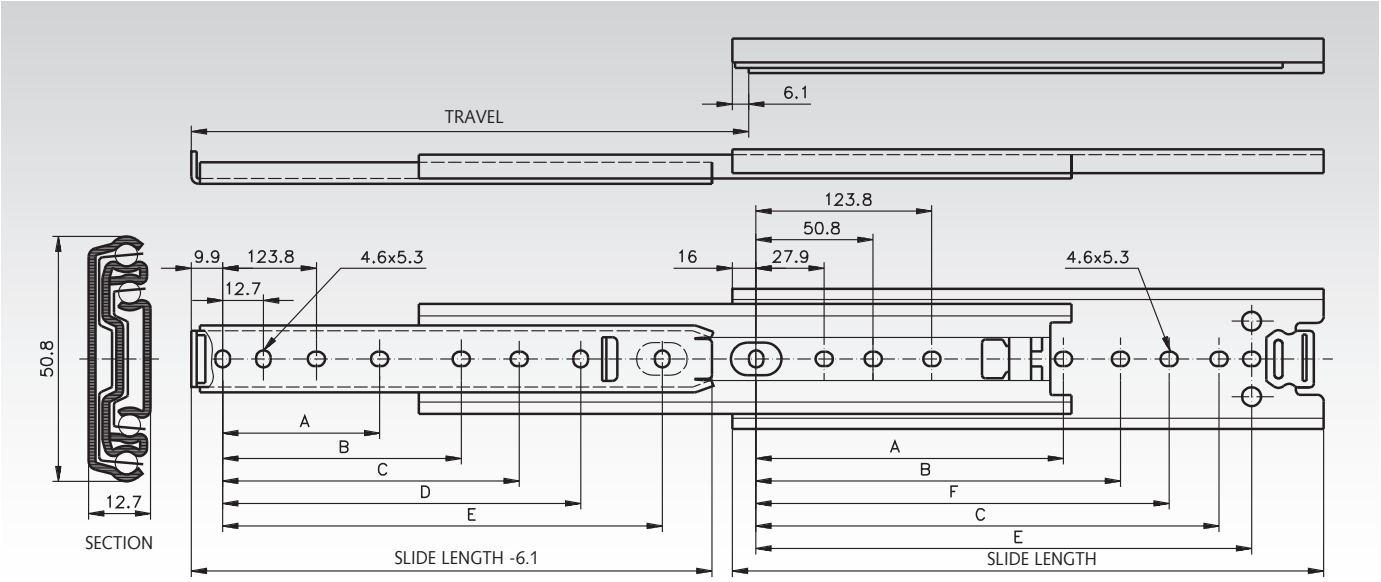

Product No. per Pair	Slide Length mm	Travel +/-3.2 mm	A mm	B mm	C mm	D mm	E mm	F mm	Load Rating per Pair kg	Weight per Pair kg
649 028 12	305	330	-	162,1	222,2	235,0	260,3	209,5	68	1,27
649 028 14	356	381	-	212,8	273,0	285,7	311,1	260,3	67	1,51
649 028 16	406	432	-	263,6	323,8	336,5	361,9	311,1	67	1,73
649 028 18	457	483	212,8	314,4	374,6	387,3	412,7	361,9	66	1,92
649 028 20	508	533	238,2	365,2	425,4	438,1	463,5	412,7	66	2,14
649 028 22	559	584	263,6	416,0	476,2	488,9	514,3	463,5	64	2,37
649 028 24	610	635	289,0	466,8	527,0	539,7	565,1	514,3	61	2,53
649 028 26	660	686	314,4	517,6	577,8	590,5	615,9	565,1	58	2,77
649 028 28	711	737	339,8	568,4	628,6	641,3	666,7	615,9	55	3,01

Note

Recommended mounts: M4 screw.
Use all mounting positions to achieve the max. load rating.
The load capacity was tested at a slide spacing of 450mm.

Slides DZ 3307, Width 12.7 mm, to 68 kg, Over Extension

Material:
Slide elements: Cold-rolled steel, bright zinc plated.
Ball retainers: Cold-rolled steel, zinc-plated.
Balls: Hardened steel.

Telescopic ball bearing slides for applications in the industrial and electronics sector.
- Fast disconnection.
- Locks in open position.
- Mounting accessories included.
- Bracket mount for electrical cabinets on request.
- Service life 10,000 cycles.

Ordering details: e.g.: Prod. No. 649 030 12, Slides DZ 3307



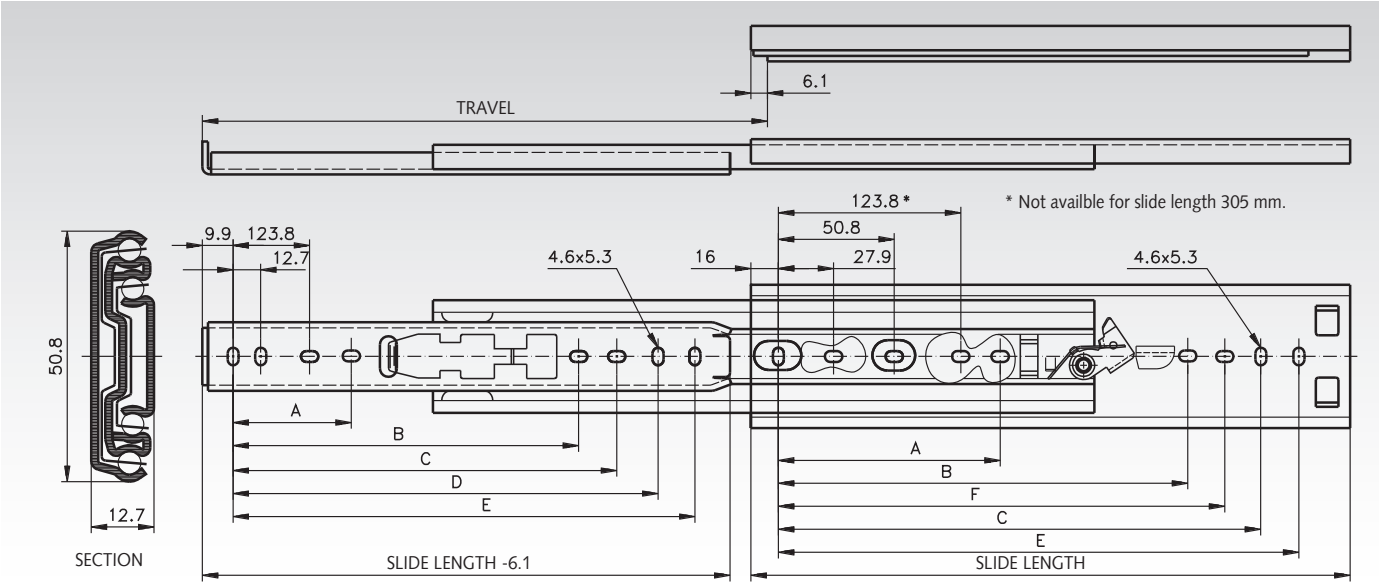

Product No. per Pair	Slide Length mm	Travel +/-3.2 mm	A mm	B mm	C mm	D mm	E mm	F mm	Load Rating per Pair kg	Weight per Pair kg
649 030 12	305	330	-	-	234,9	247,6	260,3	209,5	68	1,32
649 030 14	356	381	-	-	285,7	298,4	311,1	260,3	67	1,51
649 030 16	406	432	-	-	336,5	349,2	361,9	311,1	67	1,73
649 030 18	457	483	177,8	314,4	387,3	400,0	412,7	361,9	66	1,84
649 030 20	508	533	203,2	365,2	438,1	450,8	463,5	412,7	66	2,16
649 030 22	559	584	228,6	416,0	488,9	501,6	514,3	463,5	64	2,39
649 030 24	610	635	254,0	466,8	539,7	552,4	565,1	514,3	61	2,60
649 030 26	660	686	279,4	517,6	590,5	603,2	615,9	565,1	58	2,81
649 030 28	711	737	304,8	568,4	641,3	654,0	666,7	615,9	55	3,04

Note

Recommended mounts: M4 screw.
Use all mounting positions to achieve the max. load rating.

Selection Tool
on the Internet at **www.maedler.de**
in the section **MÄDLER®-Tools**

Slides DZ 3308, Width 12.7 mm, to 68 kg, Over Extension

Material:
Slide elements: Cold-rolled steel, bright zinc plated.
Ball retainers: Cold-rolled steel, zinc-plated.
Balls: Hardened steel.

Telescopic ball bearing slides for applications in the industrial and electronics sector.
- Fast disconnection.
- Lock-in in closed position.
- Lock-out in open position.
- Service life 10,000 cycles.



Ordering details: e.g.: Prod. No. 649 032 12, Slides DZ 3308

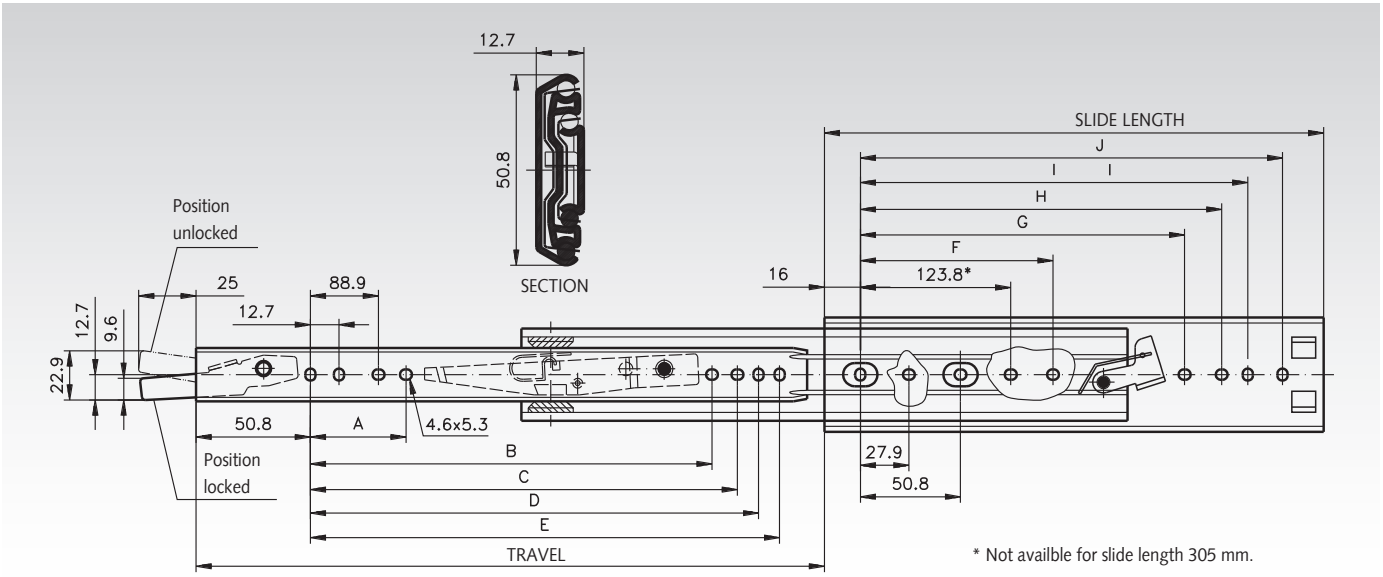

Product No. per Pair	Slide Length mm	Travel +/-3.2 mm	A mm	B mm	C mm	D mm	E mm	F mm	G mm	H mm	I mm	J mm	Load Rating per Pair kg	Weight per Pair kg
649 032 12	305	330	-	-	220,1	212,8	225,5	-	-	209,5	234,9	260,3	68	1,32
649 032 14	356	381	-	-	250,9	263,6	276,3	-	-	260,3	285,7	311,1	67	1,54
649 032 16	406	432	-	-	301,7	314,4	327,1	-	-	311,1	336,5	361,9	67	1,75
649 032 18	457	483	143,0	279,4	352,5	365,2	377,9	177,8	314,4	361,9	387,3	412,7	66	1,96
649 032 20	508	533	168,4	330,2	403,3	416,0	428,7	203,2	365,2	412,7	438,1	463,5	66	2,19
649 032 22	559	584	193,8	381,0	454,1	466,8	479,5	228,6	416,0	463,5	488,9	514,3	64	2,37
649 032 24	610	635	219,2	431,8	504,9	517,6	530,3	254,0	466,8	514,3	539,7	565,1	61	2,63
649 032 26	660	686	244,6	482,6	555,7	568,4	581,1	279,4	517,6	565,1	590,5	615,9	58	2,86
649 032 28	711	737	270,0	533,4	606,5	619,2	631,9	304,8	568,4	615,9	641,3	666,7	55	3,05

Note

Recommended mounts: M4 screw.
Use all mounting positions to achieve the max. load rating.

Slides DZ 0305, Width 19.1 mm, to 70 kg, Over Extension

Material:
Slide elements: Cold-rolled steel, bright zinc plated.
Ball retainers: Cold-rolled steel, zinc-plated.
Balls: Hardened steel.

Telescopic ball bearing slides for applications in the industrial and electronics sector.
- Locks in open position.
- Fast disconnection.
- Bracket mount for electrical cabinets on request.
- Service life 10,000 cycles.



Ordering details: e.g.: Prod. No. 649 024 12, Slides DZ 0305

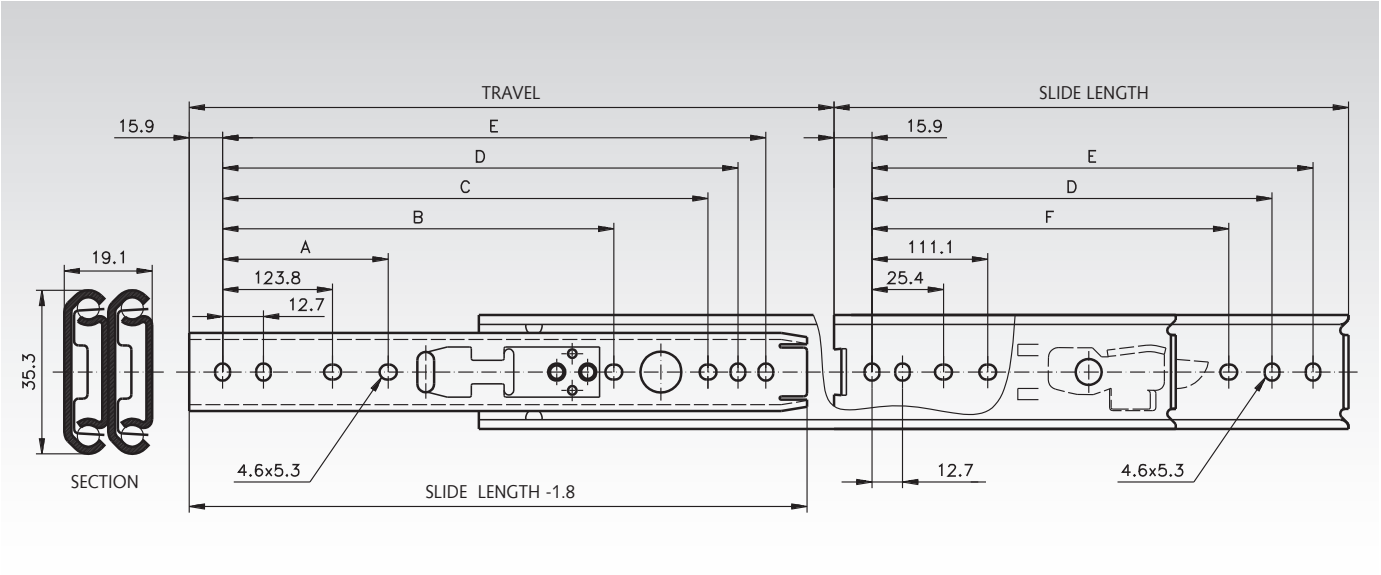

Product No. per Pair	Slide Length mm	Travel +/-3.2 mm	A mm	B mm	C mm	D mm	E mm	F mm	Load Rating per Pair kg	Weight per Pair kg
649 024 12	305	327	-	-	-	260,3	273,0	-	70	1,27
649 024 14	356	378	-	-	298,4	311,1	323,8	-	68	1,46
649 024 16	406	429	-	-	349,2	361,9	374,6	250,8	65	1,63
649 024 18	457	480	212,7	-	400,0	412,7	425,4	301,6	62	1,88
649 024 20	508	531	238,1	365,2	450,8	463,5	476,2	352,4	57	2,04
649 024 22	559	581	263,5	415,9	501,6	514,3	527,0	403,2	52	2,29
649 024 24	610	632	288,9	466,7	552,4	565,1	577,8	454,0	46	2,50
649 024 26	660	683	314,3	517,7	603,2	615,9	628,6	504,8	41	2,67
649 024 28	711	734	339,7	568,3	654,0	666,7	679,4	555,6	36	2,89

Note

Recommended mounts: M4 screw.
Use all mounting positions to achieve the max. load rating.

Slides DZ 0301, Width 19.1 mm, to 70 kg, Over Extension

Material:
Slide elements: Cold-rolled steel, bright zinc plated.
Ball retainers: Cold-rolled steel, zinc-plated.
Balls: Hardened steel.

Telescopic ball bearing slides for applications in the industrial and electronics sector.

- Low slide profile (only 35.3 mm).
- Bracket mount for electrical cabinets on request.
- Service life 10,000 cycles.



Ordering details: e.g.: Prod. No. 649 034 12, Slides DZ 0301

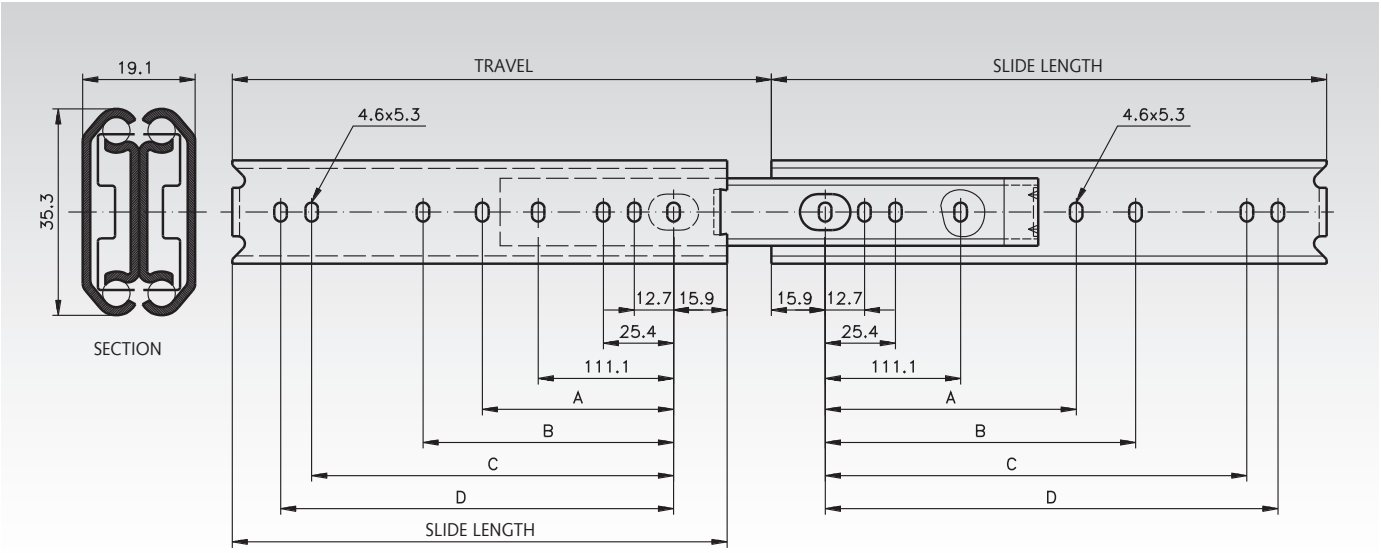

Product No. per Pair	Slide Length mm	Travel +/-3.2 mm	A mm	B mm	C mm	D mm	Load Rating per Pair kg	Weight per Pair kg
649 034 12	305	327	-	149,2	260,3	273,0	70	1,38
649 034 14	356	378	-	200,0	311,1	323,8	67	1,63
649 034 16	406	429	-	250,8	361,9	374,6	65	1,87
649 034 18	457	480	212,7	301,6	412,7	425,4	63	2,10
649 034 20	508	530	238,1	352,4	463,5	476,2	60	2,35
649 034 22	559	581	263,5	403,2	514,3	527,0	55	2,60
649 034 24	610	632	288,9	454,0	565,1	577,8	50	2,77
649 034 26	660	683	314,3	504,8	615,9	628,6	45	2,55
649 034 28	711	734	339,7	555,6	666,7	679,4	40	3,22

Note

Recommended mounts: M4 screw.
Use all mounting positions to achieve the max. load rating.

Slides DS 3031, Width 19.1 mm, to 80 kg, Stainless Steel, Over Extension

Material: Stainless steel 1.4301.

Telescopic ball bearing slides for applications also at high temperature areas.

- High temperatur food-grade grease.
- Suitable for temperature up to +300°C.
- Ideal for environments where mild steel might corrode.
- Service life 10,000 cycles.



Ordering details: e.g.: Prod. No. 649 035 30, Slides DS 3031

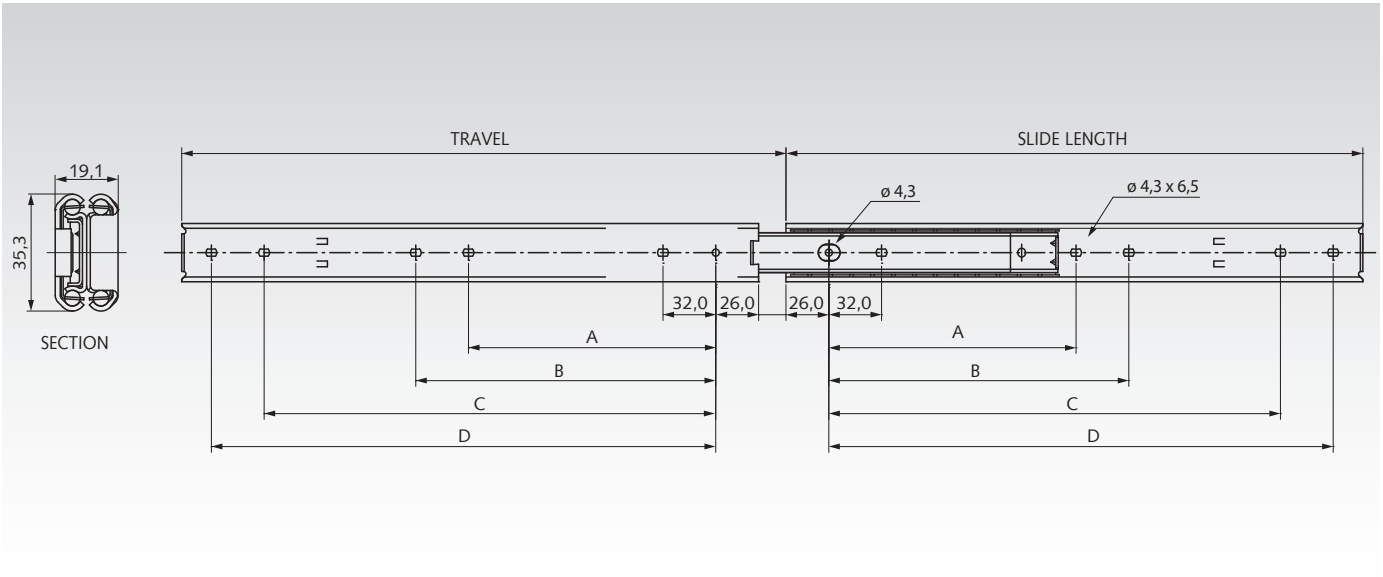

Product No. per Pair	Slide Length mm	Travel +/-3.2 mm	A mm	B mm	C mm	D mm	Load Rating per Pair kg	Weight per Pair kg
649 035 30	300	317	-	-	224	256	65	1,53
649 035 35	350	367	-	-	256	288	70	1,72
649 035 40	400	416	-	192	320	352	75	1,91
649 035 45	450	465	-	224	352	384	80	2,10
649 035 50	500	514	256	288	416	448	75	2,29
649 035 55	550	563	288	320	480	512	70	2,48
649 035 60	600	613	320	352	512	544	65	2,67
649 035 65	650	662	320	352	576	608	60	2,86
649 035 70	700	711	352	384	608	640	55	3,05

Note

Recommended mounts: M4 screw, max. head height 2.5mm, max. head Ø 9.6mm.
Use all mounting positions to achieve the max. load rating.

Selection Tool
on the Internet at **www.maedler.de**
in the section **MÄDLER®-Tools**

Slides DZ 5417, width 19.1 mm, up to 100 kg, Over-Extension

Material:
Slide elements: Cold-rolled, bright zinc-plated steel.
Ball retainers: Cold rolled steel, zinc-plated.
Balls: Hardened steel.

Telescopic precision ball bearing slides for applications in the industrial and electronics sector.
- Hold-in in the closed position.
- Service life 10,000 cycles.



Ordering Details: e.g.: Product No. 649 049 30, Slides DZ 5417

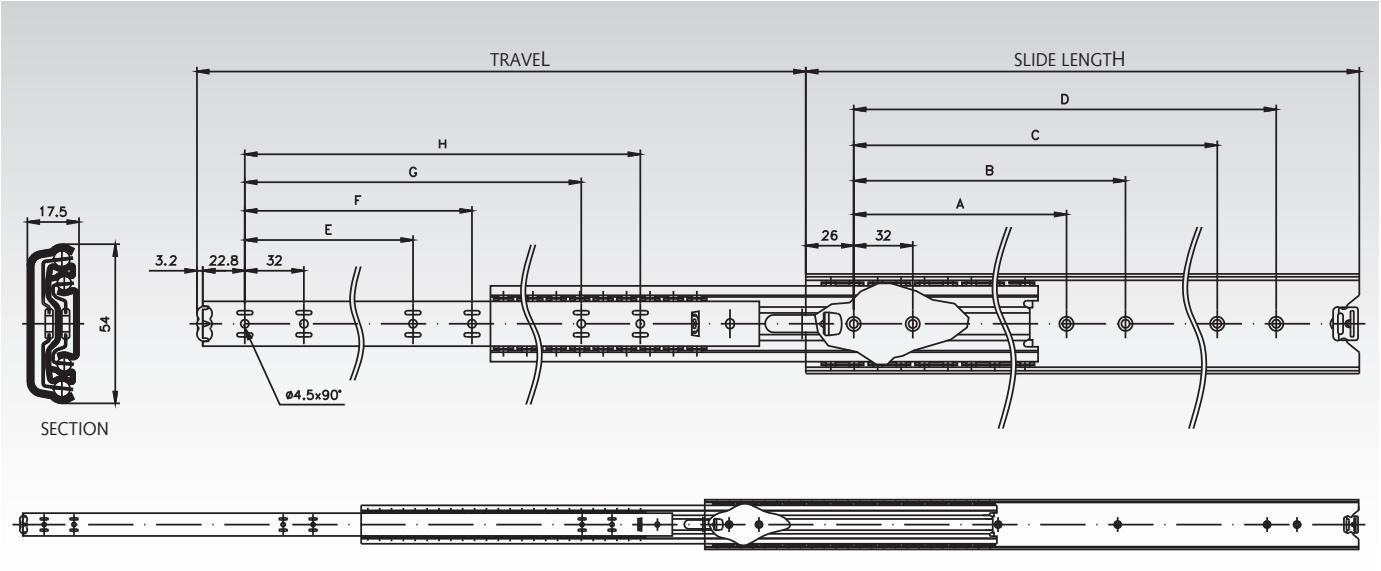

Product No. per Pair	Slide length mm	Travel +/-3,2 mm	A mm	B mm	C mm	D mm	E mm	F mm	G mm	H mm	Load Rating kg	Weight per Pair kg
649 049 30	300	340	-	-	224	256	-	-	-	256	90	1,64
649 049 35	350	389	-	-	224	256	-	-	-	256	90	1,93
649 049 40	400	438	160	192	320	352	128	160	-	352	92	2,22
649 049 45	450	487	160	192	320	352	128	160	320	352	95	2,53
649 049 50	500	537	192	224	416	448	160	192	-	416	100	2,81
649 049 55	550	586	224	-	448	480	160	192	-	448	100	3,12
649 049 60	600	635	256	288	480	512	192	224	480	512	94	3,41
649 049 65	650	684	288	320	544	576	192	256	-	544	92	3,68
649 049 70	700	733	288	416	576	608	256	288	576	608	90	4,00

Note

Recommended fastening: M4 screw.
Use all mounting positions to achieve the max. load rating.



Slides DS 5322, Width 20.7 mm, to 120 kg, Stainless Steel, Over Extension

Material: Stainless steel 1.4301.

Telescopic ball bearing slides for applications in the industrial and electronics sector.
- Ideal for for environments where mild steel might corrode.
- Hold-in in closed position.
- Easily mounted brackets with bolts.
- Especially long service life, up to 80,000 cycles.

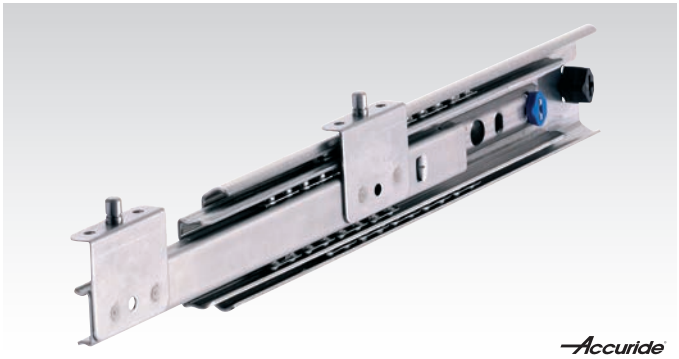

Ordering details: e.g.: Prod. No. 649 048 30, Slides DS 5322

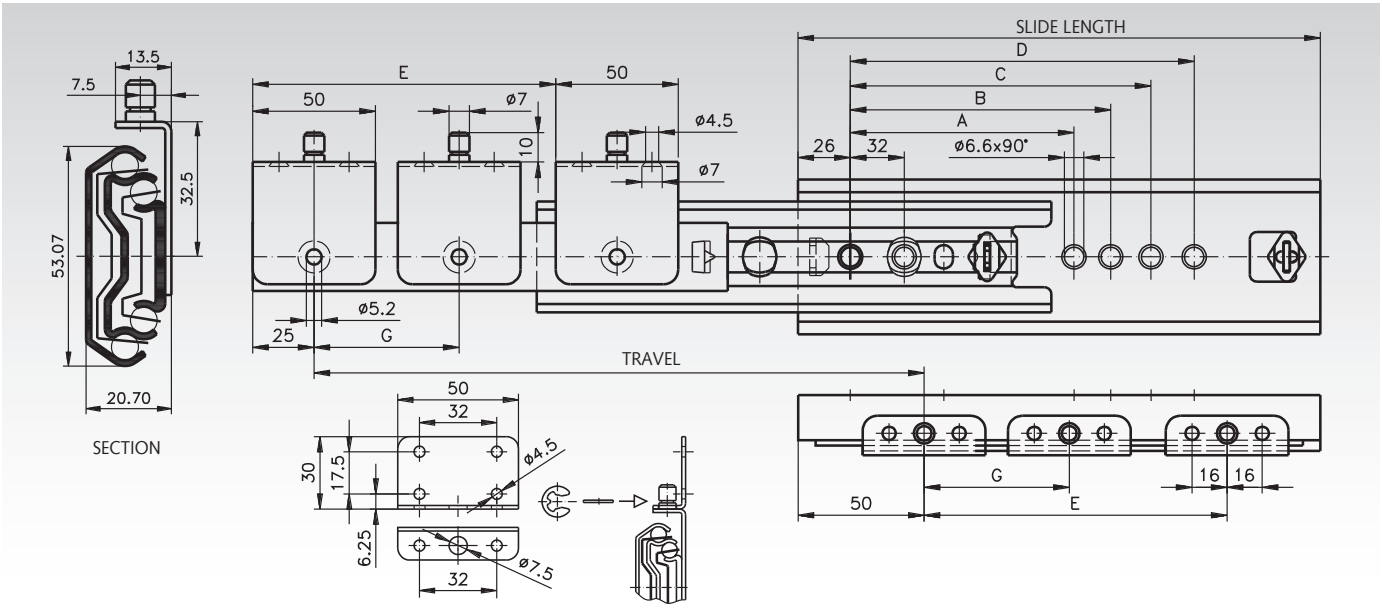

Product No. per Pair	Slide Length mm	Travel +/-3.2 mm	A mm	B mm	C mm	D mm	E mm	G mm	Load Rating per Pair kg	Weight per Pair kg
649 048 30	300	342	-	-	192	224	177	-	80	1,83
649 048 35	350	392	-	-	256	288	227	-	90	2,15
649 048 40	400	442	160	192	288	320	277	-	100	2,45
649 048 45	450	492	192	224	352	384	327	-	110	2,74
649 048 50	500	542	192	224	384	416	377	-	120	3,04
649 048 55	550	592	224	256	448	480	427	-	110	3,33
649 048 60	600	642	256	288	480	512	477	238,5	100	3,74
649 048 70	700	742	320	352	608	640	577	288,5	70	4,37
649 048 80	790	822	352	384	672	704	677	338,5	50	4,92

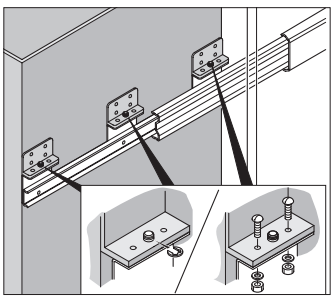

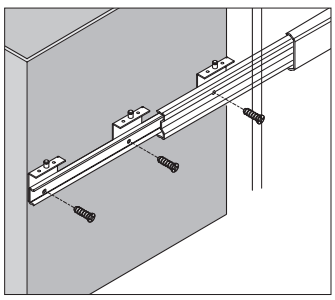

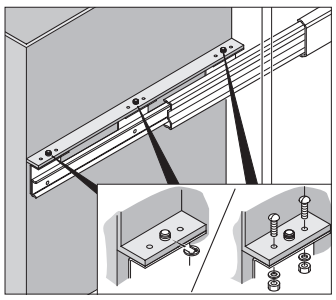

Note

Recommended mount: M5 countersunk / 6mm countersunk Euro screw.
Use all mounting positions to achieve the max. load rating.

Slides DZ 3607, Width 19.1 mm, to 120 kg, Full Extension

Material:
Slide elements: Cold-rolled steel, bright zinc plated.
Ball retainers: Cold-rolled steel, zinc-plated.
Balls: Hardened steel.

Telescopic ball bearing slides for applications in the industrial and electronics sector.
- Lock-out in open position
- Fast disconnection.
- Mountings included.
- Bracket mount for electrical cabinets on request.
- Service life 10,000 cycles.



Ordering details: e.g.: Prod. No. 649 038 12, Slides DZ 3607

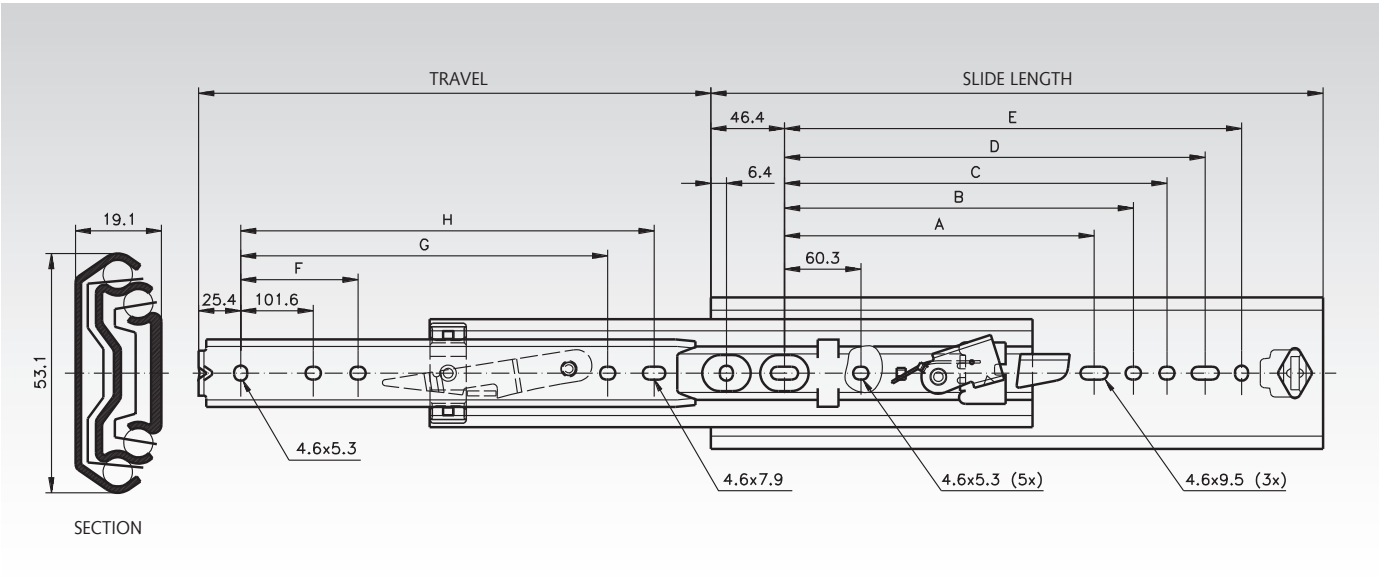

Product No. per Pair	Slide Length mm	Travel +/-3.2 mm	A mm	B mm	C mm	D mm	E mm	F mm	G mm	H mm	Load Rating per Pair kg	Weight per Pair kg
649 038 12	305	305	-	135,4	179,1	204,5	229,9	-	-	228,6	90	1,79
649 038 14	356	356	-	186,2	229,9	255,3	280,7	-	-	279,4	90	2,08
649 038 16	406	406	-	237,0	280,7	306,1	331,5	-	257,3	330,2	100	2,50
649 038 18	457	457	-	287,8	331,5	356,9	382,3	-	308,1	381,0	110	2,71
649 038 20	508	508	215,9	338,6	382,3	407,7	433,1	203,2	358,9	431,8	120	3,02
649 038 22	559	559	241,3	389,4	433,1	458,5	483,9	228,6	409,7	482,6	110	3,32
649 038 24	610	610	266,7	440,2	483,9	509,3	534,7	254,0	460,5	533,4	100	3,63
649 038 26	660	660	292,1	491,0	534,7	560,1	585,5	279,4	511,3	584,2	92	3,95
649 038 28	711	711	317,5	541,8	585,5	610,9	636,3	304,8	562,1	635,0	83	4,22

Note

Side-specific slide assembly: Levers move in same direction when pair of slides is installed.

Recommended mounts: M4 screw.
Use all mounting positions to achieve the max. load rating.

Attention: Vertical mounting only.

Slides DZ 7957, Width 19.1 mm, to 160 kg, Full Extension

Material:
Slide elements: Cold rolled steel, bright zinc-plated.
Ball retainers: Cold rolled steel, zinc-plated.
Balls: Hardened steel.

Telescopic precision ball bearing slides for applications in the industrial and electronics sector.
- Suitable for drawers up to 1000mm wide at high load.
- Fast Disconnect.
- Optional Clip-On Brackets (page 807).
- Very high service life up to 80,000 cycles.

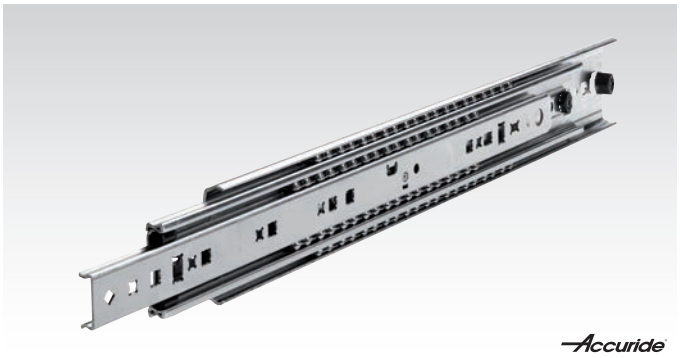

Ordering details: e.g.: Prod. No. 649 039 12, Slides DZ 7957

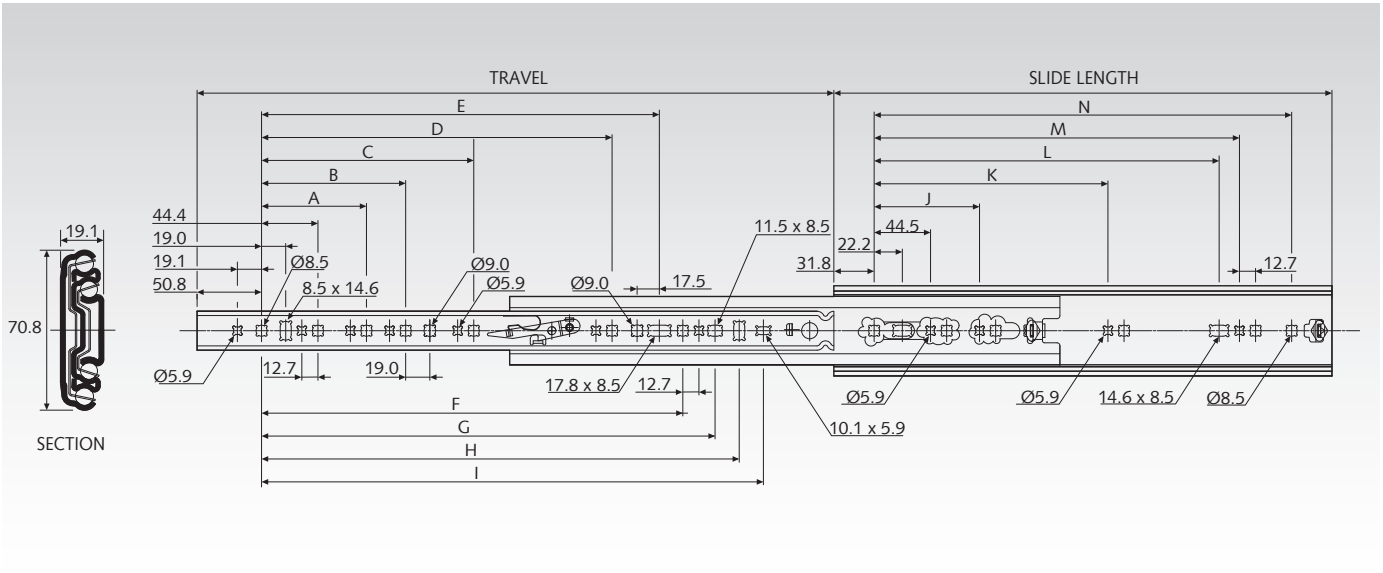

Product No. per Pair	Slide Length mm	Travel +/-3.2 mm	A mm	B mm	C mm	D mm	E mm	F mm	G mm	H mm	I mm	J mm	K mm	L mm	M mm	N mm	Load Rating Pair kg	Weight Pair kg
649 039 12	305	305	-	-	-	-	-	-	-	179,4	198,5	-	-	184,2	200,2	241,3	140	2,38
649 039 14	356	356	-	-	-	-	-	-	-	230,2	249,3	-	-	235,0	251,0	292,1	140	2,80
649 039 16	406	406	108	-	-	-	-	236,6	262,0	281,0	300,1	-	-	285,8	301,8	342,9	150	3,19
649 039 18	457	457	108	-	-	-	-	287,4	312,8	331,8	350,9	-	-	336,6	352,6	393,7	150	3,62
649 039 20	508	508	108	171,5	-	-	-	338,2	363,6	382,6	401,7	-	-	387,4	403,4	444,5	160	4,03
649 039 22	559	559	108	171,5	-	-	328,7	389,0	414,4	433,4	452,5	-	-	438,2	454,2	495,3	160	4,42
649 039 24	610	610	108	171,5	-	-	379,5	439,8	465,2	484,2	503,3	-	-	489,0	505,0	546,1	160	4,84
649 039 26	660	660	108	171,5	-	-	430,3	490,6	516,0	535,0	554,1	-	-	539,8	555,8	596,9	160	5,27
649 039 28	711	711	108	171,5	-	-	481,1	541,4	566,8	585,8	604,9	-	-	590,6	606,6	647,7	160	5,88
649 039 30	762	762	108	171,5	-	-	531,9	592,2	617,6	636,6	655,7	203,2	469,9	641,4	657,4	698,5	160	6,06
649 039 32	813	813	108	171,5	-	-	582,7	643,0	688,4	687,4	706,5	203,2	520,7	692,2	708,2	749,3	160	6,48
649 039 34	864	864	108	171,5	349,3	-	633,5	693,8	719,2	738,2	757,3	203,2	571,5	743,0	759,0	800,1	160	6,88
649 039 36	914	914	108	171,5	349,3	501,7	684,3	744,6	770,0	789,0	808,1	203,2	622,3	793,8	809,8	850,9	160	7,29

Note

Recommended mounts: M5/M6 screw.
Use all mounting positions to achieve the max. load rating.

Handed slide assembly: Levers for front disconnection move in same direction.

For bracket accessory kit see page 807. The fixings included willnot fit the 7957 slide. We recommend M6 countersunk screws.

Selection Tool
on the Internet at **www.maedler.de**
in the section **MÄDLER®-Tools**

Slides DZ 5321 SC, Width 19.1 mm, to 120 kg, Over Extension

Material:
Slide elements: Cold-rolled steel, bright zinc plated.
Ball retainers: Cold-rolled steel, zinc-plated.
Balls: Hardened steel.

Telescopic ball bearing slides for applications in the industrial and electronics sector.
- Self Close.
- Hold-in in closed position.
- Bracket mount for electrical cabinets on request.
- Service life 10,000 cycles.



Ordering details: e.g.: Prod. No. 649 042 30, Slides DZ 5321 SC

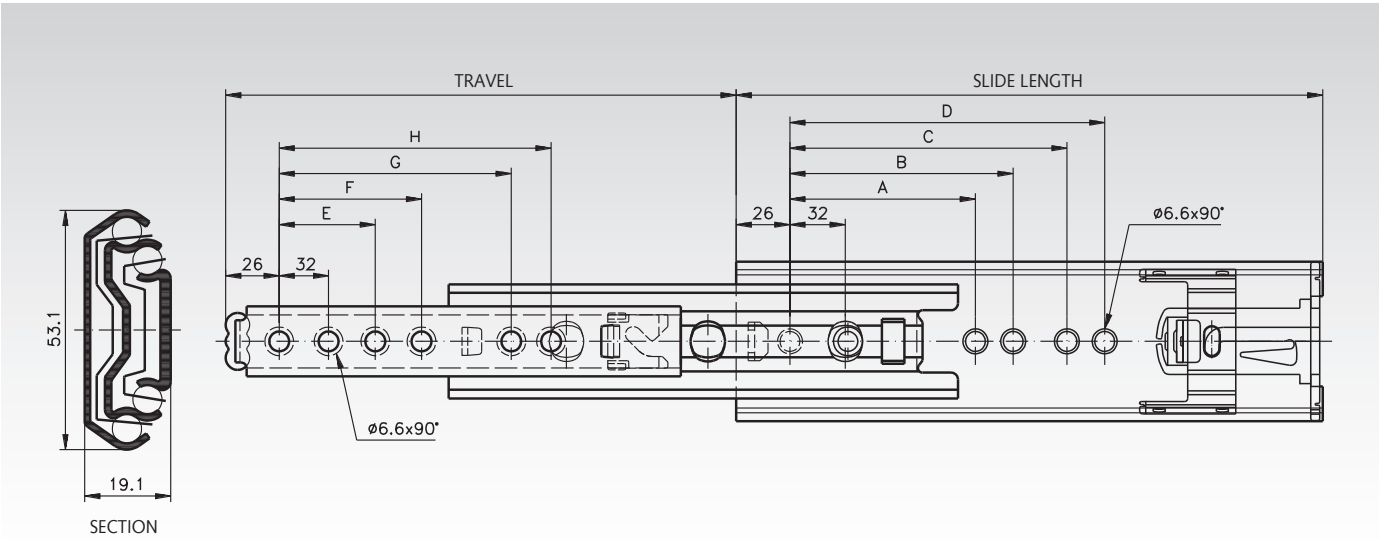

Product No. per Pair	Slide Length mm	Travel +/-3.2 mm	A mm	B mm	C mm	D mm	E mm	F mm	G mm	H mm	Load Rating per Pair kg	Weight per Pair kg
649 042 30	300	319	-	-	160	192	-	-	192	224	85	1,64
649 042 35	350	369	-	-	224	256	-	-	224	256	90	1,96
649 042 40	400	419	160	192	256	288	160	192	288	320	100	2,25
649 042 45	450	469	192	224	320	352	192	224	352	384	110	2,57
649 042 50	500	519	224	256	352	384	224	256	384	416	120	2,87
649 042 55	550	569	224	256	416	448	224	256	448	480	110	3,17
649 042 60	600	619	256	288	480	512	256	288	480	512	100	3,48
649 042 70	700	719	320	352	544	576	320	352	576	608	70	4,10
649 042 80	790	823	352	384	640	672	352	384	672	704	50	4,64

Note

Recommended mount: M5 countersunk / 6mm countersunk euro screw.
Use all mounting positions to achieve the max. load rating.

Slides DZ / DS 5321, width 19.1 mm, up to 170 kg, Over-Extension

Material Type DZ 5321:
Slide elements: Cold-rolled, bright zinc-plated steel.
Ball retainers: Cold rolled steel, zinc-plated.
Balls: Hardened steel.

Material Type DS 5321:
Stainless steel 1.4301.

Telescopic precision ball bearing slides for applications in the industrial and electronics sector.
- Hold-in in the closed position.
- Mounting bracket for electronic cabinets on request.
- Service life 10,000 / 80,000 cycles.

Ordering Details: e.g.: Product No. 649 040 30, Slides DZ 5321



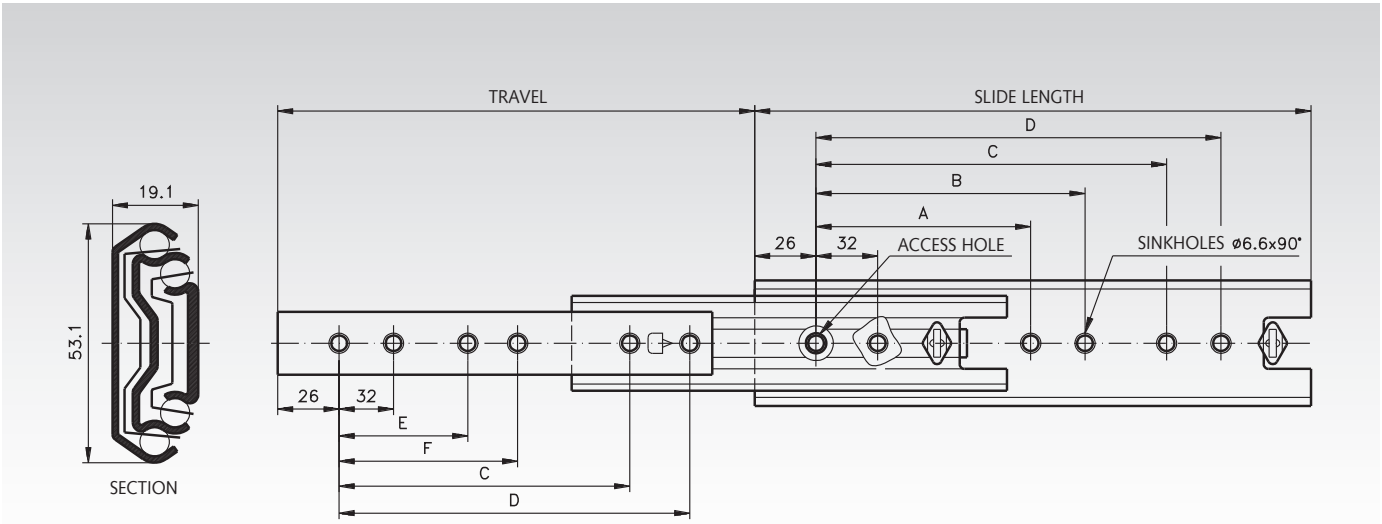

Product No. per pair DZ 5321	Product No. per pair DS 5321	Slide length mm	Travel +/-3,2 mm	A mm	B mm	C mm	D mm	E mm	F mm	Load Rating[1] per pair kg	Weight per pair kg
649 040 30	**649 440 30**	300	323,5	-	-	192	224	-	-	130 / 120	1,73
649 040 35	**649 440 35**	350	373,5	-	-	224	256	-	-	140 / 120	2,04
649 040 40	**649 440 40**	400	423,5	160	192	288	320	128	160	150 / 130	2,34
649 040 45	**649 440 45**	450	473,5	160	192	320	352	128	160	160 / 140	2,64
649 040 50	**649 440 50**	500	523,5	192	224	384	416	160	192	170 / 150	2,94
649 040 55	**649 440 55**	550	573,5	192	224	416	448	160	192	160 / 140	3,25
649 040 60	**649 440 60**	600	623,5	256	288	480	512	192	256	150 / 120	3,55
649 040 70	**649 440 70**	700	723,5	288	320	576	608	256	288	130 / 110	4,16
649 040 80	**649 440 80**	790	803,5	352	384	672	704	320	352	100 / 100	4,72
649 040 90	-	900	923,5	448	480	768	800	384	416	90 / 80	5,33
649 040 99	-	1000	1023,5	480	512	864	896	448	480	80 / 70	5,87
649 040 11	-	1100	1123,5	544	576	992	1024	480	512	70 / 60	6,39

[1] At 10,000 / 80,000 cycles.

Note

Recommended mount: M5 countersunk / 6mm countersunk euro screw.
Use all mounting positions to achieve the max. load rating.
Attention: Vertical mounting only.

Slides DZ 9301, Width 19.1 mm, to 227 kg, Full Extension

Material:
Slide elements: Cold-rolled steel, zinc plated.
Ball retainers: Plastic.
Balls: Hardened steel.

Telescopic ball bearing slides for applications in the industrial and electronics sector.
- Lengths to 1.5 m.
- Optional bracket kits for various mounting options (page 807).
- Service life 10,000 cycles (to 180 kg up to 75,000 cycles).



Ordering details: e.g.: Prod. No. 649 050 10, Slides DZ 9301

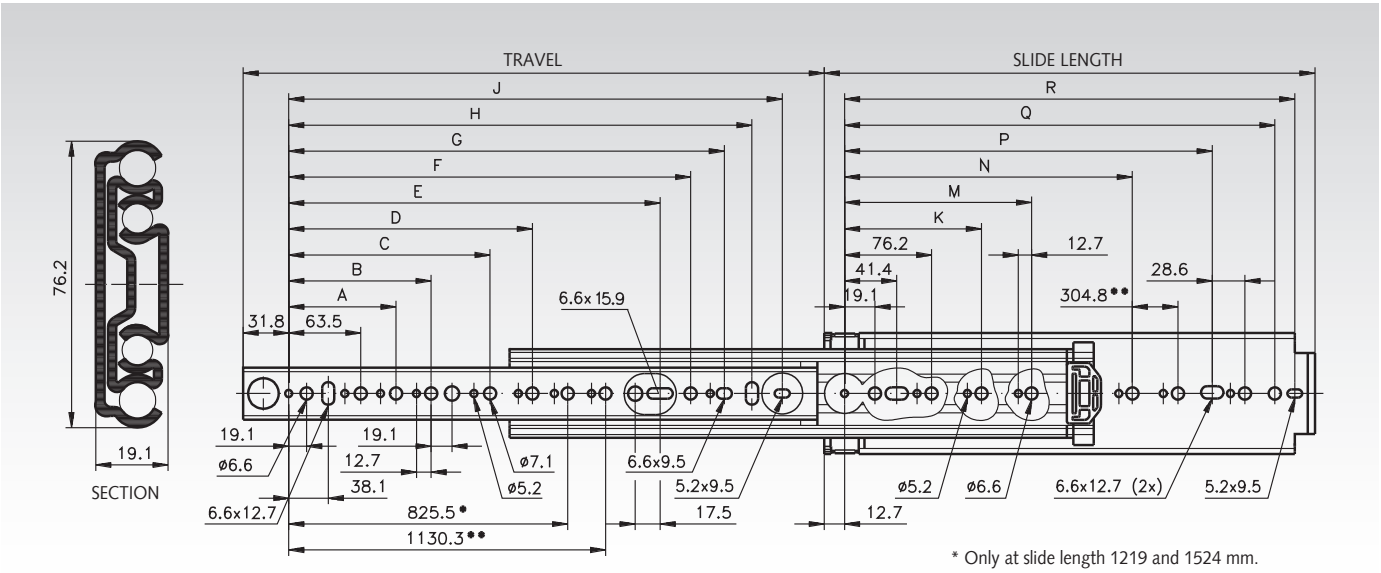

* Only at slide length 1219 and 1524 mm.
** Only at slide length 1524 mm.

Product No. per Pair	Slide Length mm	Travel +/-3.3 mm	A mm	B mm	C mm	D mm	E mm	F mm	G mm	H mm	J mm	K mm	M mm	N mm	P mm	Q mm	R mm	Load Rating Pair kg	Weight Pair kg
649 050 10	254	254	-	-	-	-	-	103,1	128,5	147,6	166,6	-	-	-	152,4	209,6	228,6	227	1,15
649 050 12	305	305	-	-	-	-	-	153,9	179,3	198,4	217,4	-	-	-	203,2	260,4	279,4	227	2,80
649 050 14	356	356	-	-	-	-	-	204,7	230,1	249,2	268,2	-	-	-	254,0	311,2	330,2	227	3,28
649 050 16	406	406	127	-	-	-	-	255,5	280,9	300,0	319,0	-	-	-	304,8	362,0	381,0	227	3,80
649 050 18	457	457	127	-	-	-	246,1	306,3	331,7	350,8	369,8	-	-	-	355,6	412,8	431,8	227	4,30
649 050 20	508	508	127	190,5	-	-	296,9	357,1	382,5	401,6	420,6	-	-	-	406,4	463,6	482,6	227	4,76
649 050 22	559	559	127	190,5	-	-	347,7	407,9	433,3	452,4	471,4	-	-	-	457,2	514,4	533,4	227	5,22
649 050 24	610	610	127	190,5	-	-	398,5	458,7	484,1	503,2	522,2	-	-	-	508,0	565,2	584,2	227	5,76
649 050 26	660	660	127	190,5	-	-	449,3	509,5	534,9	554,0	573,0	-	-	-	558,8	616,0	635,0	227	6,26
649 050 28	711	711	127	190,5	-	-	500,1	560,3	585,7	604,8	623,8	-	-	-	609,6	666,8	685,8	227	6,74
649 050 30	762	762	127	190,5	368,3	-	550,9	611,1	636,5	655,6	674,6	235	-	501,7	660,4	717,6	736,6	222	7,24
649 050 32	813	813	127	190,5	368,3	-	601,7	661,9	687,3	706,4	725,4	235	393,7	552,5	711,2	768,4	787,4	218	7,72
649 050 34	864	864	127	190,5	368,3	469,9	652,5	712,7	738,1	757,2	776,2	235	419,1	603,3	762,0	819,2	838,2	213	8,30
649 050 36	914	914	127	190,5	368,3	520,7	703,3	763,5	788,9	808,0	827,0	235	444,5	654,1	812,8	870,0	889,0	209	8,74
649 050 40	1016	1016	127	190,5	368,3	520,7	804,9	865,1	890,5	909,6	928,6	235	546,1	755,7	914,4	971,6	990,6	200	9,76
649 050 42	1067	1067	127	190,5	368,3	520,7	855,7	915,9	941,3	960,4	979,4	235	546,1	806,5	965,2	1022,4	1041,4	195	10,22
649 050 44	1118	1118	127	190,5	368,3	520,7	906,5	966,7	992,1	1011,2	1030,2	235	546,1	857,3	1016,0	1073,2	1092,2	182	10,70
649 050 48	1219	1219	127	190,5	368,3	520,7	1008,1	1068,3	1093,7	1112,8	1131,8	235	596,9	958,9	1117,8	1174,8	1193,8	182	11,72
649 050 60	1524	1524	127	190,5	368,3	520,7	1312,9	1373,1	1398,5	1417,6	1436,6	235	596,9	958,9	1422,4	1479,6	1498,6	154	14,64

Note

Recommended mount: M5/M6 screw.
Max. screw head of 4.8 mm height and 12.7 mm Ø.
Use all mounting positions to achieve the max. load rating.

Bracket accessory kits DZ 634 for side and bottom mounting
see page 807.



Slides DZ 9308, Width 19.1 mm, to 227 kg, Full Extension

Material:
Slide elements: Cold-rolled steel, bright zinc plated.
Ball retainers: Plastic.
Balls: Hardened steel.

Telescopic ball bearing slides for applications in the industrial and electronics sector.
- Slides sold separately (left or right).
- Lock-in in open position.
- Lock-out in closed position.
- Front lever lock release.
- Only for vertical mounting.
- Optional bracket accessory kits for various mounting options (page 807).
- Service life 10,000 cycles (to 180 kg up to 75,000 cycles).

Note: Sold singly.
Picture: Left slide.



Ordering details: e.g.: Prod. No. 649 052 12, Slide DZ 9308, left
Prod. No. 649 054 12, Slide DZ 9308, right

Drawing: Left Slide

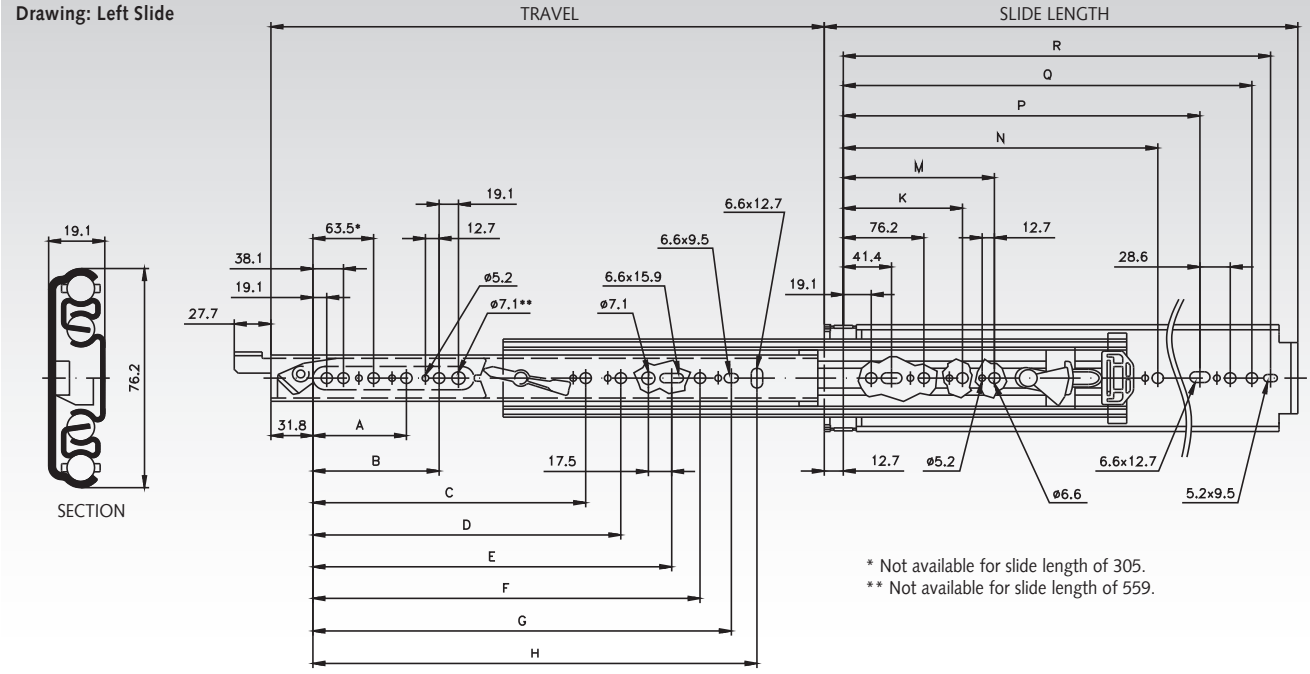

* Not available for slide length of 305.
** Not available for slide length of 559.

Product No. per Piece left	Product No. per Piece right	Slide Length mm	Travel +/-3.3 mm	A mm	B mm	C mm	D mm	E mm	F mm	G mm	H mm	K mm	M mm	N mm	P mm	Q mm	R mm	Load Rating per Pair kg	Weight Piece kg
649 052 12	**649 054 12**	305	305	-	-	-	-	-	153,9	179,3	198,4	-	-	-	203,2	260,4	279,4	227	1,46
649 052 14	**649 054 14**	356	356	-	-	-	-	-	204,7	230,1	249,2	-	-	-	254,0	311,2	330,2	227	1,71
649 052 16	**649 054 16**	406	406	-	-	-	-	-	255,5	280,9	300,0	-	-	-	304,8	362,0	381,0	227	1,97
649 052 18	**649 054 18**	457	457	127	-	-	-	-	306,3	331,7	350,8	-	-	-	355,6	412,8	431,8	227	2,21
649 052 20	**649 054 20**	508	508	127	-	-	-	296,9	357,1	382,5	401,6	-	-	-	406,4	463,6	482,6	227	2,45
649 052 22	**649 054 22**	559	559	127	190,5	-	-	347,7	407,9	433,3	452,4	-	-	-	457,2	514,4	533,4	227	2,69
649 052 24	**649 054 24**	610	610	127	190,5	-	-	398,5	458,7	484,1	503,2	-	-	-	508,0	565,2	584,2	227	2,96
649 052 26	**649 054 26**	660	660	127	190,5	-	-	449,3	509,5	534,9	554,0	-	-	-	558,8	616,0	635,0	227	3,20
649 052 28	**649 054 28**	711	711	127	190,5	-	-	500,1	560,3	585,7	604,8	-	-	-	609,6	666,8	685,8	227	3,46
649 052 30	**649 054 30**	762	762	127	190,5	-	-	550,9	611,1	636,5	655,6	235	-	501,7	660,4	717,6	736,6	222	3,71
649 052 32	**649 054 32**	813	813	127	190,5	-	-	601,7	661,9	687,3	706,4	235	-	552,5	711,2	768,4	787,4	218	3,98
649 052 34	**649 054 34**	864	864	127	190,5	-	520,7	652,5	712,7	738,1	757,1	235	-	-	762,0	819,1	832,2	213	4,22
649 052 36	**649 054 36**	914	914	127	190,5	368,3	520,7	703,3	763,5	788,9	807,9	235	-	-	812,8	869,9	889,0	209	4,49
649 052 40	**649 054 40**	1016	1016	127	190,5	368,3	-	804,9	865,1	890,5	909,5	235	-	755,7	914,4	971,5	990,6	200	5,03
649 052 42	**649 054 42**	1067	1067	127	190,5	368,3	-	855,7	915,7	941,3	960,4	235	-	806,5	965,2	1022,4	1041,4	195	5,27
649 052 48	**649 054 48**	1219	1219	127	190,5	368,3	520,7	1008,1	1068,3	1093,7	1112,8	235	-	958,9	1117,6	1174,8	1193,8	182	6,00
649 052 60	**649 054 60**	1524	1524	127	190,5	368,3	520,7	1312,9	1373,1	1398,5	1417,8	235	596,9	958,9	1422,4	1479,5	1498,6	154	7,54

Note

These slides are sold separately. To lock both sides a left-hand and a right-hand slide are required. To lock one side a left or right-hand slide can be combined with slide DZ 9301 as non-locking companion slide, see page 803.

Attention: Vertical mounting only.

Recommended mount: M5/M6 screw.
Max. screw head of 4.8 mm height and 12.7 mm Ø.
Use all mounting positions to achieve the max. load rating.

Bracket accessory kits DZ 634 for side and bottom mounting see page 807.

Slides DA 4160, Width 26.5 mm, to 300 kg, Full Extension

Material:
Slide elements: Aluminium, corrosion resistant.
Ball retainers and Balls: Stainless Steel.

Heavy Duty Telescopic ball bearing slides for applications in the industrial and electronics sector.
- Very high load capacity up to 300 kg.
- Good corrosion resistance.
- Only for vertical mounting.
- Service life 10,000 cycles.



Ordering details: e.g.: Prod. No. 649 055 30, Slides DA 4160

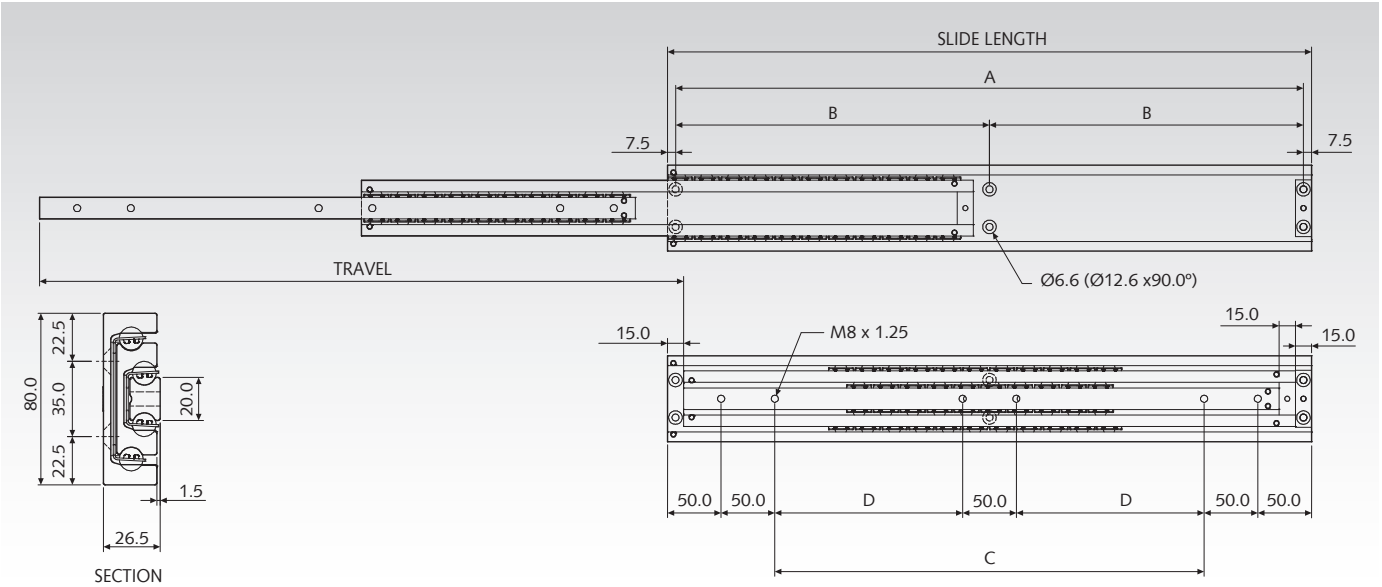

Produ per Pair	Slide Length mm	Travel +/-3,2 mm	A mm	B mm	C mm	D mm	Load Rating per Pair kg	Weight kg
649 055 30	300	300	285	-	100	-	240	2,50
649 055 35	350	350	335	-	150	-	255	2,93
649 055 40	400	400	385	-	200	-	270	3,37
649 055 45	450	450	435	-	250	-	285	3,80
649 055 50	500	500	485	-	300	-	300	4,24
649 055 55	550	550	-	267,5	-	150	300	4,68
649 055 60	600	600	-	292,5	-	175	300	5,12
649 055 65	650	650	-	317,5	-	200	295	5,56
649 055 70	700	700	-	342,5	-	225	290	6,00
649 055 80	800	800	-	392,5	-	275	270	6,87
649 055 90	900	900	-	442,5	-	325	250	7,75
649 056 00	1000	1000	-	492,5	-	375	230	8,62

Note

Recommended mounts: M6/M8 screw.
Use all mounting positions to achieve the max. load rating.

Attention: Vertical mounting only.

The load rating is based on slides mounted 600mm apart. These slides are also suitable for wider applications, if the drawer is stiff enough.

End stops have been tested to 10 cycles with the nominated loads at 0.8 m/s. We recommend that additional external stopping arrangements are used.

We recommend that quality grease, rated for extreme pressure, is re-applied at 2000 cycle intervals.

Slides DZ 0522, Width 26.5 mm, to 180 kg, Over Extension

Material:
Slide elements: Cold-rolled steel, bright zinc plated.
Ball retainers: Cold-rolled steel, zinc-plated.
Balls: Hardened steel.

Telescopic ball bearing slides for applications in the industrial and electronics sector.
- Heavy-duty construction.
- Shock blocks offering protection against shock and vibration.
- Protective shroud prevents excessive contamination of the ball tracks.
- Mounting plates on inner and outer members.
- Service life 10,000 cycles (to 140 kg up to 40,000 cycles).

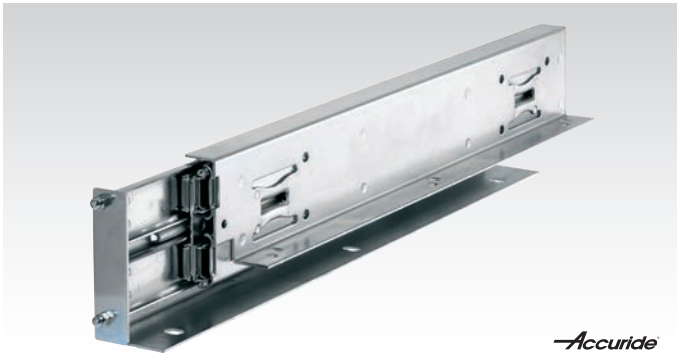

Ordering details: e.g.: Prod. No. 649 058 59, Slides DZ 0522

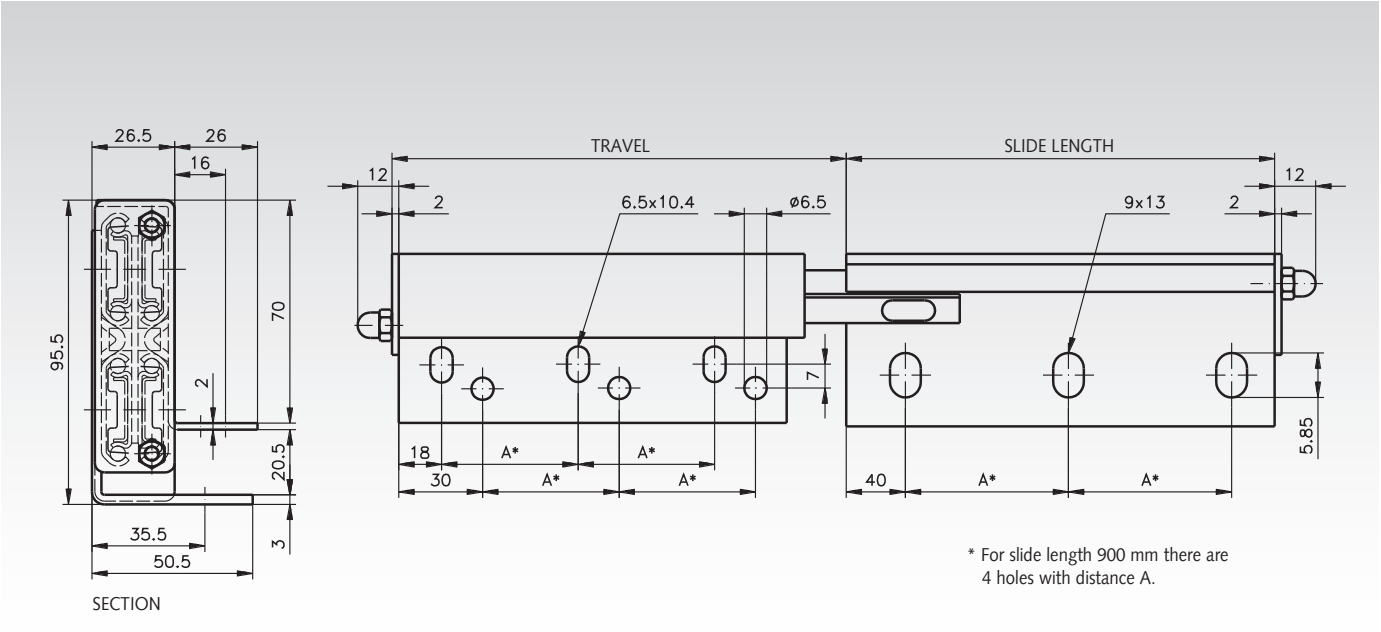

Product No. per Pair	Slide Length mm	Travel +/-3.2 mm	A mm	Overall Length mm	Load Rating per Pair kg	Weight per Pair kg
649 058 59	457	534	194,0	481	180	9,74
649 058 61	600	625	265,0	624	180	12,68
649 058 62	900	907	276,5	924	150	19,24

Note

Recommended mount: M6 screws on the inner, extending member, M8 screws on the outer fixed member.
Use all mounting positions to achieve the max. load rating.
The cabinet and drawer must be designed to minimise any deflection and torsion of the slide.

Overall length = slide length + 24 mm.

Selection Tool
on the Internet at **www.maedler.de**
in the section **MÄDLER®-Tools**

Pairs of Clip-On Brackets DZ 633 for Slides 2109, 2132, 3732 and 3832

Material:
Steel, bright zinc plated.
Can be used for:
Type DZ 2109 (page 772).
Type DZ 2132 (page 776).
Type DZ 3732 (page 782).
Type DZ 3832 (page 783).
Type DZ 3832 DO (page 787).
Type DZ 3832 SC (page 786).

Per pair of slides, one pair of clip-on brackets is required.
Recommended mounts: M4 screw.

Ordering details: e.g.: Prod. No. 649 020 35, 1 Pair of Clip-On Brackets DZ 633, Zinc Plated, 346.7 mm long

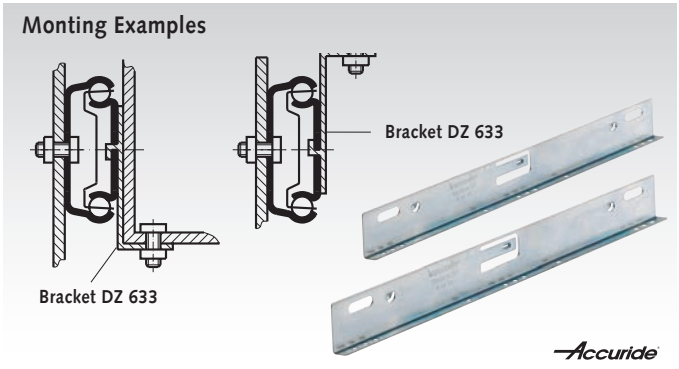

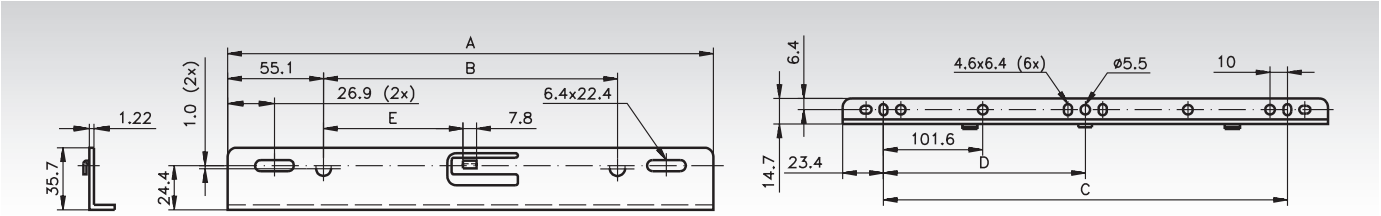

Product No. Pair of Brackets DZ-zinc bright	can be used for Type 2109/2132 with slide length	can be used for Types 3732/3832 with slide length	A mm	B mm	C mm	D mm	E mm	Weight per Pair kg
649 020 35	-	350	346,7	236,5	300	150	114,4	0,34
649 020 40	400	400	396,7	286,6	350	175	139,4	0,38
649 020 45	450/600/650/700	450	446,8	336,6	400	200	164,4	0,42
649 020 50	500	500	496,8	386,6	450	225	189,4	0,48
649 020 55	550	550/600/650/700	546,8	436,6	500	250	214,4	0,52

Bracket Accessory Kits DZ 634 for Slides 9301 and 9308

Material: Steel, bright zinc plated.

Each kit comprises: 2 brackets and 4 hexagon screws 6.35 mm with washers and nuts.
Bracket accessory kits for side or bottom mounting (examples and amount of bracket accessory kits required see selection table page 808).
Can be used for: Type DZ 9301 (page 803) and Type DZ 9308 (page 804).

Ordering details: e.g.: Prod. No. 649 056 12, Bracket Kit DZ 634, 305 mm long



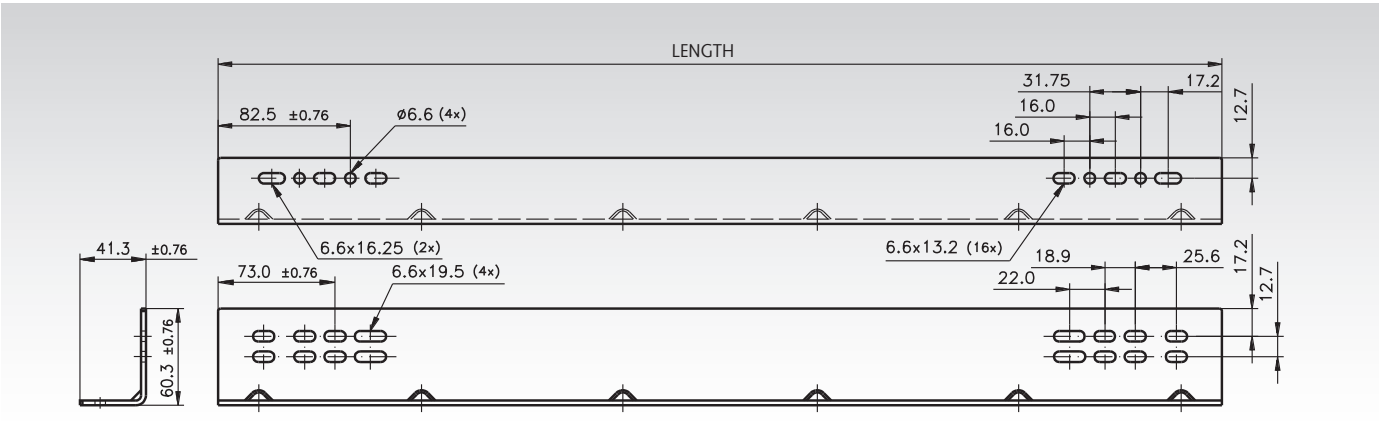

Product No. Kit*	Length mm	Width mm	Height mm	Weight kg	Product No. Kit*	Length mm	Width mm	Height mm	Weight kg
649 056 12	305	41,3	60,3	1,3	**649 056 22**	559	41,3	60,3	2,4
649 056 16	406	41,3	60,3	1,7	**649 056 28**	711	41,3	60,3	3,1

* Amount of kits required for each pair of slides see selection table page 808.

Bracket Accessory Kits DZ 634: Mounting Examples and Selection Table

For bracket accessory kits DZ 634 (page 807) with slides DZ 9301 (page 803) or DZ 9308 (page 804).

Examples Side Mounting

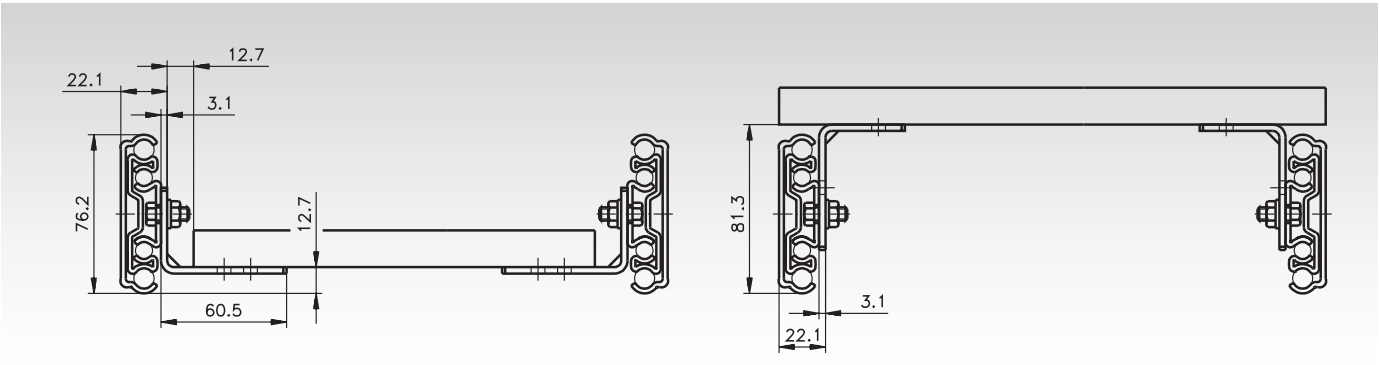

Examples Bottom Mounting

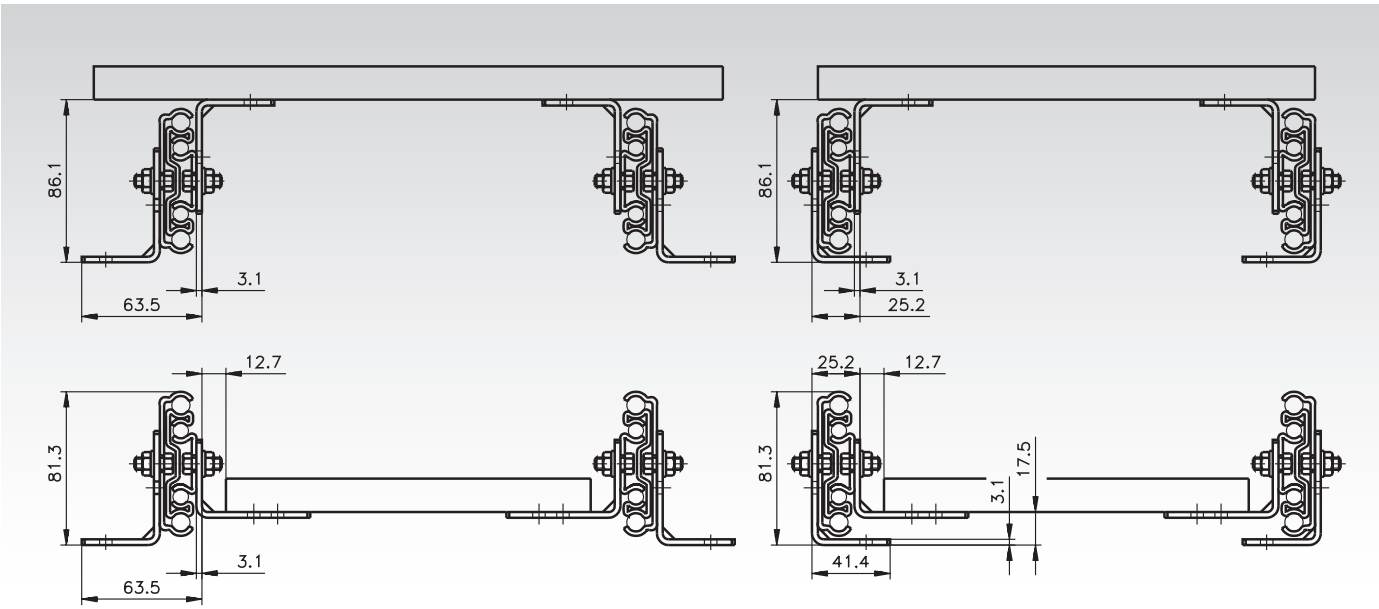

Selection Table

Pair of Slides DZ 9301	Pair of Slides DZ 9308 left / right	Slide Length mm	Side Mounting Required Bracket Kits, Amount and Product No.	Bottom Mounting Required Bracket Kits, Amount and Product No.
649 050 12	649 052 12 / 649 054 12	304,8	1 x 649 056 12	2 x 649 056 12
649 050 14	649 052 14 / 649 054 14	355,6	1 x 649 056 12	2 x 649 056 12
649 050 16	649 052 16 / 649 054 16	406,4	1 x 649 056 16	2 x 649 056 16
649 050 18	649 052 18 / 649 054 18	457,2	1 x 649 056 16	2 x 649 056 16
649 050 20	649 052 20 / 649 054 20	508,0	1 x 649 056 16	2 x 649 056 16
649 050 22	649 052 22 / 649 054 22	558,8	1 x 649 056 22	2 x 649 056 22
649 050 24	649 052 24 / 649 054 24	609,6	1 x 649 056 22	2 x 649 056 22
649 050 26	649 052 26 / 649 054 26	660,4	1 x 649 056 22	2 x 649 056 22
649 050 28	649 052 28 / 649 054 28	711,2	1 x 649 056 28	2 x 649 056 28
649 050 30	649 052 30 / 649 054 30	762,0	1 x 649 056 28	2 x 649 056 28
649 050 32	649 052 32 / 649 054 32	812,8	1 x 649 056 28	2 x 649 056 28
649 050 34	649 052 34 / 649 054 34	863,6	2 x 649 056 12	4 x 649 056 12
649 050 36	649 052 36 / 649 054 36	914,4	2 x 649 056 12	4 x 649 056 12
649 050 40	649 052 40 / 649 054 40	1016,0	1 x 649 056 12 & 1 x 649 056 22	2 x 649 056 12 & 2 x 649 056 22
649 050 42	649 052 42 / 649 054 42	1066,8	1 x 649 056 12 & 1 x 649 056 22	2 x 649 056 12 & 2 x 649 056 22
649 050 48	649 052 48 / 649 054 48	1219,2	1 x 649 056 12 & 1 x 649 056 28	2 x 649 056 12 & 2 x 649 056 28
649 050 60	649 052 60 / 649 054 60	1524,0	1 x 649 056 22 & 1 x 649 056 28	2 x 649 056 22 & 2 x 649 056 28

Linear Motion Guide DA 0115 RC with Ball Carriage

Material: Track made from aluminium.
Carriage: Stainless steel housing with plastic sealings.
On choice: With stainless steel balls (greased) or polymer balls (grease free).

Linear guide for universal use.

- Four track lenghts on choice (for to cut by the customer).
- Without boreholes, or with mounting holes.
- Several carriages can be used on one track.
- Resistant against corrosion and dirt.
- All parts have to be ordered seperately.
- Long service life, tested to 80,000 meters of travel distance.

Ordering details: e.g.: 1x Prod. No. 649 705 01, Carriage,
1x Prod. No. 649 705 06H, Track 600mm with Mounting Holes,
2x Prod. No. 649 705 03, End Stop



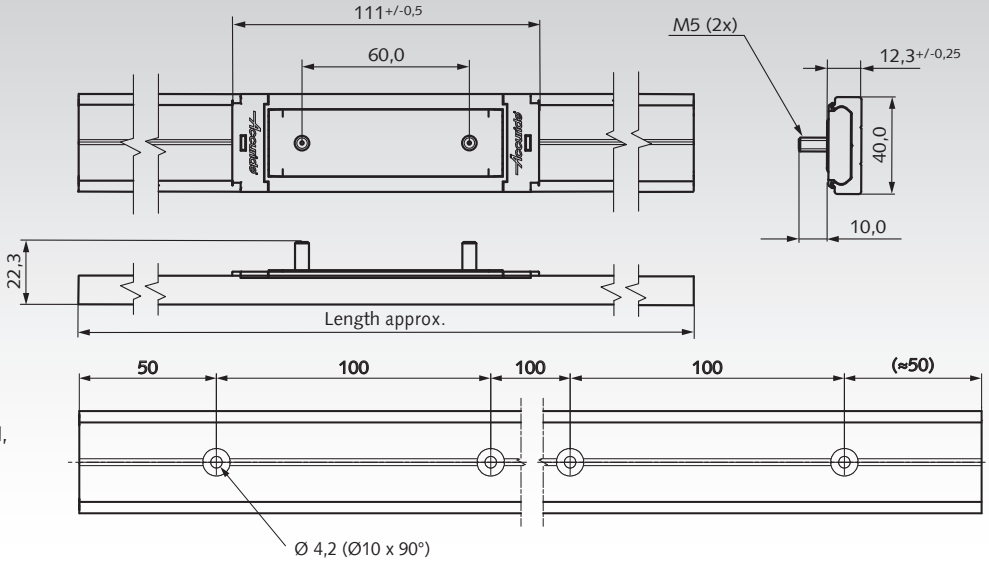

Mounting holes only at Product No. 649 705 06H, No. 649 705 12H, No. 649 705 18H, and No. 649 705 24H

Product No.	Product	Load ratings in kg depending on mounting position and number of carriages									Weight
		vertically mounted			horizontally monted, lying			horizontally monted, hanging			
		1 Carriage	2 Carri.	3 Carri.	1 Carriage	2 Carri.	3 Carri.	1 Carriage	2 Carri.	3 Carri.	g
649 705 01	Carriage with stainless steel balls	50	90	130	30	55	70	40	70	90	120
649 705 02	Carriage with polymer balls	30	54	75	18	32	42	24	42	54	85
649 705 06	Track, length 600mm										320
649 705 06H	Track, length 600mm with holes										320
649 705 12	Track, length 1200mm										635
649 705 12H	Track, length 1200mm with holes										635
649 705 18	Track, length 1800mm										950
649 705 18H	Track, length 1800mm with holes										950
649 705 24	Track, length 2400mm										1270
649 705 24H	Track, length 2400mm with holes										1270
649 705 03*	End Stop (1 piece)*										15

* Depending on the application, 2 pieces may be required. 2 screws included.



Carriage (with mounting aid) and End Stops have to be ordered seperately.



Tracks on choice without bores or with mounting holes.

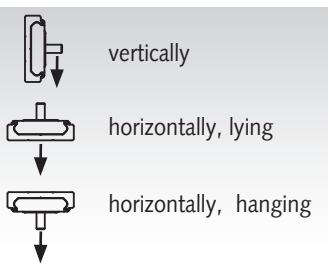

The load ratings depend on the mounting position (see table).

On request:



Drilling jig: to drill pinholes for permanent pinned connection of tracks.

Note

Not recommended for high torque applicatins.
Fix track on a rigid and levelm surface. Fixing recommendation: M4 countersunk screw or 4mm countersunk wood screw.
Drill countersunk holes in the middle of track, hole distance from 100mm up to 200mm, depending on mounting position and load.

Push the carriages with the mounting aid carefully onto the track. Distribute weight evenly across carriages. Infinte track lengths possible. Butt tracks end to end and align the centre lines. For permanent pinned connection, use drilling jig (on request) for 3mm pins. Reworking on request.

Linear Motion Guides DFG 115, Friction Guides

Material: Track and carriage from aluminium, hard anodised.
Plain bearings from advanced technical polymer.

Linear Motion Guides with plain bearings for universal use.

- Dimensionally interchangeable with rolling bearing linear motion guides ISO 12090 size 15.
- Three types of carriages on choice: non-adjustable / manual adjustable / automatic adjustment.
- Four track lenghts on choice (for to cut by the customer).
- Several carriages can be used on one track.
- Resistant against corrosion, suitable for high pressure wash down.
- Long service life, maintenance-free.
- All parts have to be ordered seperately.

Ordering details: e.g.: 1x Prod. No. 649 707 01, Carriage Non-Adjustable
1x Prod. No. 649 707 05, Track 500mm

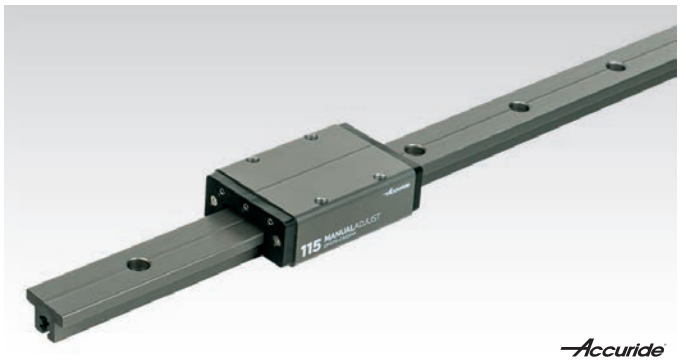

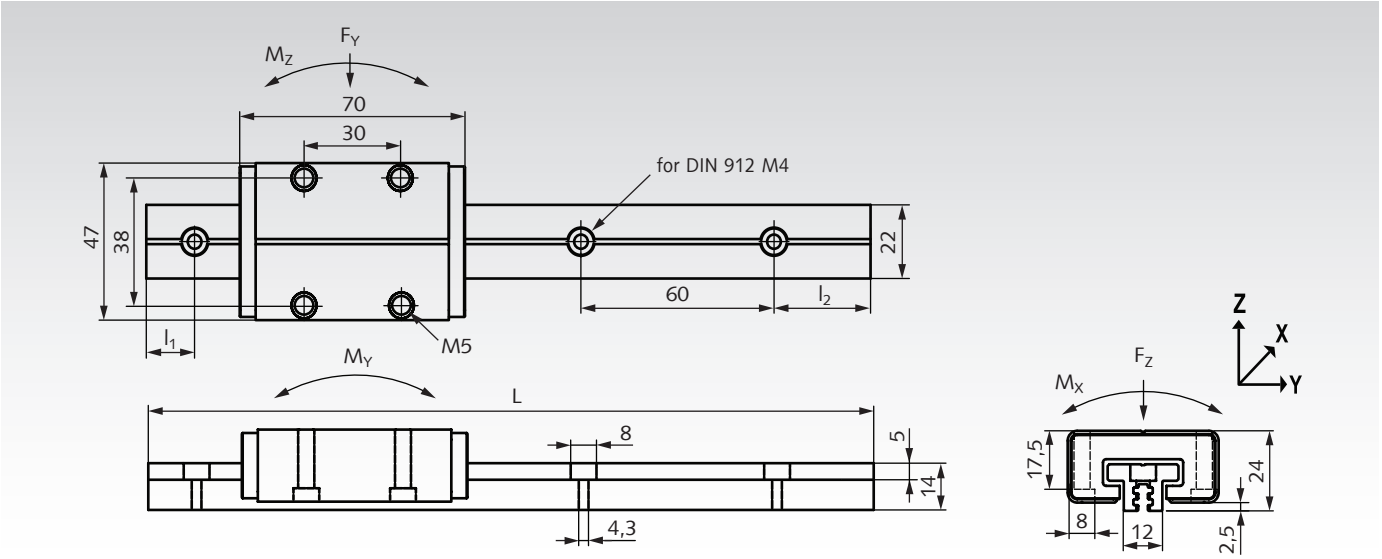

Product No. Carriage	Type	Version	Weight g
649 707 01	DFG115-CASSNA	non-adjustable	92
649 707 02	DFG115-CASSMA	manuel adjustable	98
649 707 03	DFG115-CASSAA	automatic adjustment	96

Product No. Track	Type	L mm	l_1 mm	l_2 mm	Weight g
649 707 05	DFG115-0050	500	40	40	240
649 707 10	DFG115-0100	1000	20	20	480
649 707 15	DFG115-0150	1500	40	20	720
649 707 20	DFG115-0200	2000	40	40	960

Performance Values

Static loads: F_Y = 2kN; F_Z = 4kN; $-F_Z$ = 4kN.

Dynamic loads: F_Y = 0.25kN; F_Z = 0.5kN; $-F_Z$ = 0.5kN.

Static moments: M_X = 10Nm; M_Y = 10Nm; M_Z = 10Nm.

Dynamic moments: M_X = 1.25Nm; M_Y = 1.25Nm; M_Z = 1.25Nm.

Maximum values are mutually exclusive.

Speed: $v_{max.}$ = 2m/s. **Temperature range:** -10°C to +90°C.

Travel at v=1m/s and 20°C, with load F_Z without moments:

Load F_Z:	100N	200N	300N	400N	500N
Travel:	9600km	4600km	3000km	2500km	2000km

Description of Carriage Types

Non-Adjustable



Manuel Adjustable



Allen key SW 1.5mm not included

Automatic Adjustment



Installation Pins



Product No. 649 707 01:
Carriage non-adjustable.
Most cost-effective version.
The clearance cannot be adjusted.
Play of new carriage: max. 0.125mm in Y and Z direction. It can be used for simplier applications or as `floating bearing´ on parallel rails.

Product No. 649 707 02:
Carriage manual adjustable.
For the most applications, this is the preferable type. The clearance or pre-load can be manual adjusted with an Allen key (SW 1.5mm). Adjustment range: from max. clearance 0.125mm in Y and Z direction up to a preload of 30N. Torque at the adjusting screws max. 0.1Nm.

Product No. 649 707 03:
Carriage with automatic adjustment.
Before installing the carriage, the 3 supplied installation pins must be inserted, pushed in and turned a quarter turn to reset and fix the preload springs. After setting the carriage on the track, the 3 installation pins must be turned a quarter turn again and taken out. This releases the preload springs for the automatic adustment to a preload of approx. 4.5N (+/-1N). This adjustment will continue to operate throughout the life of the product.

LOCTITE® 222 - Low-Strength Thread Locking



Ordering details: e.g.: Product No. 140 731 01, Loctite 222, Cont. 10 ml

Product No.	Contents in ml	Packaging Type	Weight in g
140 731 01	10	Bottle	20
140 731 02	50	Bottle	77

Specifications
- Thread size: to M36.
- Strength: Low.
- Functional strength (Typical value at +22°C): 6 hrs.
- Breakaway torque according to DIN 54454 at M10: 6 Nm.
- Temperature resistance: -55°C to +150°C.

Approvals
- P1 NSF Reg. No.: 123002.

Low-strength thread locking for all threaded connections made from metal to M36.
The connections can be unfastened using normal tools.

Applications
Ideal for adjusting screws, screws at maintenance access, carburetor screws etc.. Also suitable for metals which might brake during disassembly.

LOCTITE® 243 - Medium Strength Thread Locking



Ordering details: e.g.: Product No. 140 731 07, Loctite 243, Cont. 10 ml

Product No.	Contents in ml	Packaging Type	Weight in g
140 731 07	10	Bottle	20
140 731 08	50	Bottle	78

Specifications
- Thread size: to M36.
- Strength: Medium.
- Functional strength (Typical value at +22°C): 2 hrs.
- Breakaway torque according to DIN 54454 at M10: 20 Nm.
- Temperature resistance: -55°C to +180°C.

Approvals
- P1 NSF Reg. No.: 123000.
- Certified to ANSI/NSF.
- Standard 61.

Medium strength thread locking for all threaded connections made from metal to M36.
Tolerates low oil-based contaminations.
The connections can be unfastened using normal tools.

Applications
Locks and prevents loosening from vibration on parts such as screws, nuts and studs, e.g., on motors, gearboxes and housings.

LOCTITE® 290 - Post-Assembly Thread Locking, Medium Strength



Ordering details: e.g.: Product No. 140 731 12, Loctite 290, Cont. 10 ml

Product No.	Contents in ml	Packaging Type	Weight in g
140 731 12	10	Bottle	20
140 731 13	50	Bottle	77

Specifications
- Thread size: to M12.
- Strength: Medium.
- Functional strength (Typical value at +22°C): 3 hrs.
- Breakaway torque according to DIN 54454 at M10: 10 Nm.
- Temperature resistance: -55°C to +150°C.

For post-assembly thread locking (medium strength). For metal threads. Because of its low viscosity, the product penetrates into the threads, to size M12. When disassembling the parts, the connection should be heated to +250°C.

Applications
Prefabricated connections, carburetor screws, adjusting screws, screws at maintenance access etc.

LOCTITE® 2701 - Maximum Strength Thread Locking



Ordering details: e.g.: Product No. 140 731 18, Loctite 2701, Cont. 10 ml

Product No.	Contents in ml	Packaging Type	Weight
140 731 18	10	Bottle	20
140 731 19	50	Bottle	78

Specifications
- Thread size: To M20.
- Strength: High.
- Functional strength (Typical value at 22°C): 6 hrs.
- Breakaway torque according to DIN 54454 at M10: 38 Nm.
- Temperature resistance: -55°C to +150°C.

Approvals
- P1 NSF Reg. No.: 123006.

Maximum strength thread locking for all threaded connections made from metal, including passive materials, such as high-alloyed steel or chrome plated surfaces. Ideal for threaded connections exposed to strong vibrations and shocks, e.g. studs on motors or pumps etc. When disassembling the parts, the connection should be heated to +250°C.

Applications
All threaded connections which require high durability against strong vibrations and shocks or extreme environmental or chemical influences.

Safety Data Sheets at www.maedler.de in the section Downloads

LOCTITE® 603 - Oil-Tolerant Bonding Product



Ordering details: e.g.: Product No. 140 732 02, Loctite 603, Cont. 10 ml

Product No.	Contents in ml	Packaging Type	Weight in g
140 732 02	10	Bottle	20
140 732 03	50	Bottle	83

Specifications
- Strength: High.
- Handling strength (at room temperature on steel): after 8 min.
- Functional strength (Typical value at +22°C): min. 12 hrs.
- Bondline gap: to 0.1 mm.
- Temperature resistance: -55°C to +150°C.

Approvals
- P1 NSF Reg. No.: 123003.
- Tested and recommended by leading roller bearing manufacturers.

Oil-tolerant, universal bonding product for metal. Tolerates oil-based contaminations. Especially suited for the mounting of bearings (bondline gap to 0.1 mm). Rapid setting with high strength. When disassembling the parts, the connection should be heated to +250°C.

Applications
Bonding of bushes, bearings etc. in housings and on shafts with small bondline gap (to 0.1 mm).

LOCTITE® 638 - Bonding Product for Large Gaps



Ordering details: e.g.: Product No. 140 732 07, Loctite 638, Cont. 10 ml

Product No.	Contents in ml	Packaging Type	Weight in g
140 732 07	10	Bottle	20
140 732 08	50	Bottle	83

Specifications
- Strength: High.
- Handling strength (at room temperature on steel): after 4 min.
- Functional strength (Typical value at +22°C): min. 6 hrs.
- Bondline gap: To 0.25 mm.
- Temperature resistance: -55°C to +180°C.

Approvals
- WRC approval (BS 6920): 1307537.
- DVGW approval.
- P1 NSF Reg. No.: 123010.

Special bonding product for metal highly capable of filling gaps and fast reached handling strength. For gaps up to 0.25 mm. Temperature resistant to + 150°C. Handling strength after only 4 minutes. When disassembling the parts, the connection should be heated to +250°C.

Applications
Bonding of bushes, bearings etc. in housings and on shafts with large bondline gap (to 0.25 mm).

LOCTITE® 648 - Bonding Product with High Temperature Resistance



Ordering details: e.g.: Product No. 140 732 13, Loctite 648, Cont. 10 ml

Product No.	Contents in ml	Packaging Type	Weight in g
140 732 13	10	Bottle	20
140 732 14	50	Bottle	83

Specifications
- Strength: High.
- Handling strength (at room temperature on steel): after 3 min.
- Functional strength (Typical value at 22°C): min. 6 hrs.
- Bondline gap: To 0.15 mm.
- Temperature resistance: -55°C to +180°C.

Universal bonding product for metal, temperature resistant to +175°C. Capable of filling gaps up to 0.15 mm. Handling strength after only 3 minutes. When disassembling the parts, the connection should be heated to 250°C.

Applications
Bonding of bushes, bearings etc. in housings and on shafts, in applications where high operating temperatures prevail.

Safety Data Sheets at www.maedler.de in the section Downloads

LOCTITE® 401 - Universal Instant Adhesive



Ordering details: e.g.: Product No. 140 733 04, Loctite 401, Contents 5 g

Product No.	Contents in g	Packaging Type	Weight in g
140 733 04	5	Bottle	14
140 733 05	20	Bottle	31

Specifications
- Temperature resistance: -40°C to +120°C.
- Handling strength (steel at +22°C and 50% air humidity): after 3-10 sec.
- Viscosity mPa.s: 100.
- Especially suited for: porous materials.
- Transparent, colourless.

Approvals
- P1 NSF Reg. No.: 123011.

Universal instant adhesive. Bonds almost all materials as, e.g., plastics, elastomers, metals, paper, cardboard, wood.

Application examples
Bonding a PVC seal onto an ABS housing when manufacturing car mirrors. Bonding foam rubber onto a steel or plastic housing. Bonding PVC foils onto paper when producing packaging materials. Bonding small plastic parts onto wood, e.g., in the furniture industry.

LOCTITE® 406 - Instant Adhesive for Plastic and Rubber



Ordering details: e.g.: Product No. 140 733 09, Loctite 406, Cont. 20 g

Product No.	Contents in g	Packaging Type	Weight in g
140 733 09	20	Bottle	31

Specifications
- Temperature resistance: -40°C to +120°C.
- Handling strength (steel at +22°C and 50% air humidity): after 2-10 sec.
- Viscosity mPa.s: 20.
- Especially suited for: plastics.
- Transparent, colourless.

Special instant adhesive for fast bonding of rubbers (incl. EPDM), plastics and elastomers. In combination with the primer Loctite 7239 even hard to bond plastics can be bonded.

Application examples
Bonding a silicon rubber piece onto a plastic housing in a car locking unit. Bonding a plastic part onto a fire extinguisher. Producing O-rings with the Loctite O-ring set.

LOCTITE® 454 - Universal Instant Adhesive, Non-Drip Gel



Ordering details: e.g.: Product No. 140 733 16, Loctite 454, Contents 3 g

Product No.	Contents in g	Packaging Type	Weight in g
140 733 16	3	Tube	5
140 733 17	10	Syringe	18
140 733 18	20	Tube	32

Specifications
- Temperature resistance: -40°C to +120°C.
- Handling strength (steel at +22°C and 50% air humidity): after 5-10 sec.
- Viscosity: gel.
- Especially suited for: porous materials.
- Transparent, colourless.

Approvals
- P1 NSF Reg. No.: 123009.

Universal, instant adhesive gel can be used for bonding metals, composite materials, wood, cork, foam plastic, leather, cardboard, paper and ceramics. Good gap filling capability. Recommended for use on vertical surfaces or when working overhead. Can also be used with automated processing systems.

Application examples
Bonding rubber door stops onto walls. Bonding plastic signs onto wooden doors. Bonding rubber treads onto the steps of an aluminium ladder.

LOCTITE® 4850 - Flexible Instant Adhesive



Ordering details: e.g.: Product No. 140 733 24, Loctite 4850, Cont. 5 g

Product No.	Contents in g	Packaging Type	Weight in g
140 733 24	5	Bottle	18
140 733 26	20	Bottle	31

Specifications
- Temperature resistance: -40°C to +80°C.
- Handling strength (steel at +22°C and 50% air humidity): after 3-10 sec.
- Viscosity mPa.s: 400.
- Especially suited for: flexible materials.
- Transparent, colourless.

Approvals
- P1 NSF Reg. No.: 123011.

Flexible instant adhesive with medium viscosity. Rapid setting, transparent. Especially suited for the assembly and repair of flexible materials and components.

Application examples
Bonding of materials for the production and repair of flexible seals and sleeves or the mounting of elastic components.

Safety Data Sheets at www.maedler.de in the section Downloads

LOCTITE® 518 - Medium Strength Standard Flange Sealant



Ordering details: e.g.: Product No. 140 734 02, Loctite 518, Cont. 50 ml

Product No.	Contents in ml	Packaging Type	Weight in g
140 734 02	50	Cartridge	89

Specifications
- Sealing type: Liquid (acrylic, red).
- Flange type: torsionally rigid.
- Curing type: anaerobic.
- Temperature resistance: -50 to +150°C.
- Oil resistance: excellent.
- Water/glycol resistance: excellent.

One-component, medium strength flange sealant. The curing takes place on metal contact as anaerobic process. Fast curing at room temperature. Not recommended for plastic parts. Seals instantly at low pressure. Bondline gap to 0.3 mm.

Applications
Sealing of dimensionally stable flange connections as, e.g., engine and gearbox cover, water-pump flanges and controller housing covers.

LOCTITE® 5910 - Permanently Elastic Adhesive/Sealant



Ordering details: e.g.: Product No. 140 734 07, Loctite 5910, Cont. 50 ml

Product No.	Contents in ml	Packaging Type	Weight in g
140 734 07	50	Cartridge	104
140 734 08	300	Cartridge	453

Specifications
- Sealing type: liquid (silicon, black).
- Flange type: flexible.
- Curing process: air humidity.
- Non sticky: 20 min
- Temperature resistance: -60°C to +200°C.
- Oil resistance: excellent.
- Water/glycol resistance: medium.

Permanently elastic flange sealant for non torsionally rigid flange seals. Low odour, little gas emission. Curing at room temperature. High resistance to vibration. Can also be used on plastic parts. Bondline gap to 1 mm.

Applications
Sealing of flexible flanges which require high oil and vibration resistance, e.g. rocker box covers, intake flanges, aluminium oil baths and controller housing covers.

LOCTITE® 5920 - Permanently Elastic Flange Seal Ultra Copper



Ordering details: e.g.: Product No. 140 734 12, Loctite 5920, Cont. 40 ml

Product No.	Contents in ml	Packaging Type	Weight in g
140 734 12	40	Tube	80
140 734 15	300	Cartridge	368

Specifications
- Sealing type: liquid (silicon, cupreous).
- Flange type: flexible.
- Curing process: air humidity.
- Temperature resistance: -60 to +350°C.
- Oil resistance: excellent.
- Water/glycol resistance: excellent.

One-component flange seal that cures at room temperature with excellent temperature resistance. Excellent resistance against motor and gearbox oil. Meets and exceeds manufacturer's specifications of GM and Ford. Short term temperature resistance to +350°C. Sealing gaps to 6 mm.

Applications
Sealing of flexible flanges, oil pumps, thermostat housings, water pumps, oil baths, gearbox covers etc.

LOCTITE® 7200 - Adhesive- and Sealant-Remover



Ordering details: e.g.: Product No. 140 734 20, Loctite 7200, Cont. 400 ml

Product No.	Contents in ml	Packaging Type	Weight in g
140 734 20	400	Spray Can	423

Specifications
- Aerosol, amber.
- Active agent: mixture of aliphatic glycol esters etc.
- Expanding agent: propane gas.
- Exposure time 10 to 15 min (with silicon 30 Min.).
- Foam forming, sticks well to vertical surfaces.

Removes hardened seals and adhesives from most metal surfaces within 10 to 15 minutes. Resolves and removes mould, lubricants, soot, caked on oil, fat and paint. Can also be applied on wood.

Application examples
Preparation of metal parts prior to the application of seals sealants. Makes it easier to grind away or scrape off old sealings, i.e. no unnecessary damage to the surface finish.

Safety Data Sheets at www.maedler.de in the section Downloads

Chain Spray



Ordering Details:
Product No 140 701 00, Chain Spray

Product No.	Contents in ml	Weight in g
140 701 00	400	465

Special adhesive lubricant for the maintenance of drive chains, rolling bearings, open gear boxes etc..

- strong bonding power.
- highly capable of creep.
- displaces moisture.
- reducing noise.
- protection against wear.
- corrosion protection.
- temperature resistance: -5°C to +140°C.
- silicone-free.

Spray Cleaner



Ordering Details:
Product No. 140 701 01, Spray Cleaner

Product No.	Contents in ml	Weight in g
140 701 01	500	471

Degreaser, mould cleaner, brake cleaner.

- degreases and cleans metal, glass, etc..
- resolves resinified residues.
- removes adhesive residues.
- cleans brake and clutch parts.
- can be used for cleaning prior to painting or bonding.
- silicone-free.

PTFE Spray



Ordering Details: Product No. 140 701 02,
PTFE-Spray

Product No.	Contents in ml	Weight in g
140 701 02	400	368

Hard-drying permanent separating, lubrication and anti-blocking agent. The substance can be removed using a suitable solvent.

- free of grease, dry and clean.
- water, dust and dirt repellent.
- resistant against many chemicals, water, oils etc..
- temperature resistance: -20°C to +200°C.
- silicone-free.

Zinc Repair Spray



Ordering Details: Product No. 140 701 03,
Zinc Repair Spray

Product No.	Contents in ml	Weight in g
140 701 03	400	389

Heavy-duty, fast drying spray for the repair of zinc-plated surfaces.

- colour: light silver, glossy finish similar to zinc.
- optically almost indistinguishable from hot-dip zinc coating.
- protection against corrosion by zinc-aluminium pigments and resins.
- can be used to repair the zinc surface after welding.
- temperature resistance: for short time up to +200°C.
- silicone-free.

Long-Term Corrosion Protection Spray



Ordering Details.: Product No. 140 701 04,
Long-Term Corrosion Protection Spray

Product No.	Contents in ml	Weight in g
140 701 04	400	378

Reliable long term protection against corrosion and oxidation for all steel and metal parts.

- The strong-bonding, ceraceous protective film is resistant against water and salt water.
- long-term conservation even in a chemically aggressive environment.
- highly capable of creep, displaces moisture, bonds even to vertical surfaces.
- temperature resistance: up to +100°C.
- silicone-free.

Aluminium Spray



Ordering Details:
Product No. 140 701 06, Aluminium Spray

Product No.	Contents in ml	Weight in g
140 701 06	400	465

Heavy-duty, fast drying spray for the repair of aluminium surfaces and also for decoration.

- protection against corrosion by aluminium pigments and resins.
- abrasion resistant.
- fast drying.
- temperature resistance: for short time up to +80°C.
- silicone-free.

Multi-Function Spray WD-40® Smart Straw™



Ordering Details: e.g.: Product No. 140 701 05,
Multi-Function Spray WD-40

Product No.	Contents in ml	Weight in g
140 701 05	500	537

Multiple use spray.

- displacement of moisture.
- penetrating oil.
- corrosion protection.
- cleaner.
- lubricant.
- silicone-free.

Stainless-Steel Spray



Ordering Details
Product No. 140 701 07, Stainless-Steel Spray

Product No.	Contents in ml	Weight in g
140 701 07	400	465

Heavy-duty, fast drying spray for the repair of stainles steel surfaces and also for decoration.

- to touch up damaged stainless steel surfaces.
- reliable protection against corrosion even in extreme weather conditions.
- effective surface coating for all metal parts, most plastics, wood, stone, cardboard, glass, etc.
- abrasion resistant.
- temperature resistance: for short time up to +250°C.
- silicone-free.

Safety Data Sheets at www.maedler.de in the section Downloads

GENERAL TECHNICAL INFORMATION

Mounting Options for Drive Wheels

There are several possibilities for mounting driving wheels (sprockets, V-Belt Pulleys, pulleys, spur gears etc.) or hubs on shafts. Most wheels are stocked with a rather small bore to allow for further machining. Machining works as drilling out, keywaying a.s.o. can be done at extra charge.

Please note: for several shaft diameters a number of sprockets, V-belt pulleys, spur gears and worm-gear sets are in stock "ready-to-install", i.e. with custom bore and keyway or prepared for Taper clamping bushes.



Fixing Pins

A hole is drilled through hub and shaft and both parts are then connected with a fixing pin. Usually only one side of the hub is pre-drilled, then the wheel is pushed onto the shaft and the hole is drilled through both shaft and the other side of the hub. Then the pin is driven in. This mounting method is suitable for low torques.

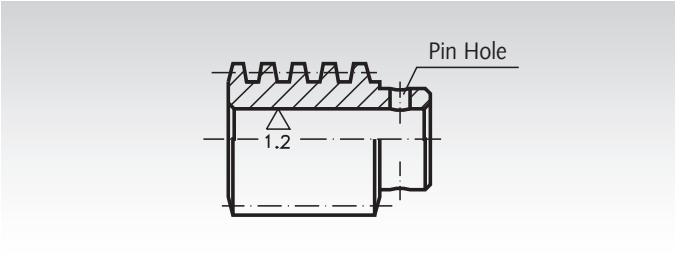

Feather Key Connection

Shaft and hub both receive a keyway, a key is pushed into the keyway of the hub. The wheel is pushed onto the shaft and secured against axial movement (with a set screw or with a stepped shaft and axial screw and washer at the end of the shaft). The most common kind of keyway is DIN 6885/1. Key connections are suitable for medium torques. Keys DIN 6885 see page 578. Boxes with an assortment of keys DIN 6885 see page 577.

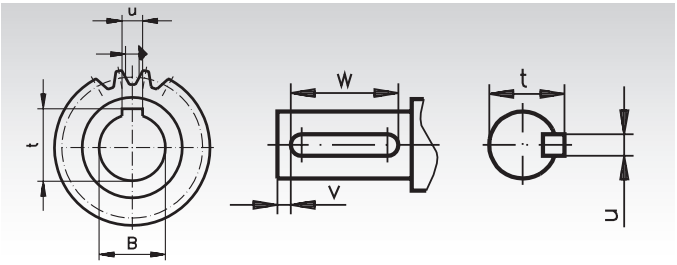

Clamping Sets, Clamping Bushes and Shrink Disks

Clamping sets and thin-walled clamping bushes are available for various diameters. They allow fast and easy mounting on round shafts. A keyway is not required. Shrink disks are special clamping sets which press a thin-walled hub onto a shaft. Clamping connections are suitable for rather high torques. **Clamping sets and bushes, and shrink disks** see page 330.

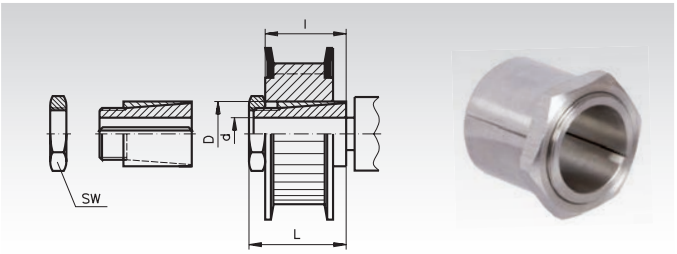

Taper Clamping Bushes

These customary conical bushes are used for easy and fast mounting of driving elements in Taper version. They can be used with and without key.

The bushes are available with various outer dimensions. For every outside measure there are bushes with many different bores available. This mounting method is cost-efficient and fast, and suitable for rather high torques. A large selection of cost-efficient driving elements in Taper version are available ex stock:

- Taper clamping bushes
- Welding hubs for taper bushes
- Taper sprockets
- Taper V-belt pulleys
- Taper pulleys
- Taper couplings.

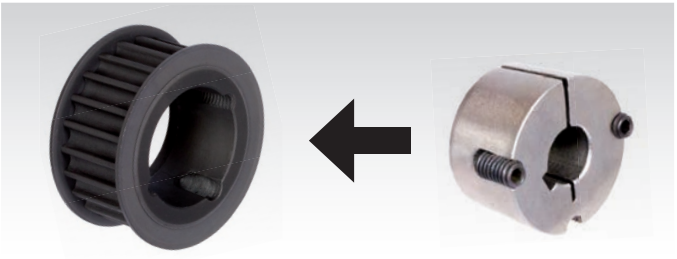

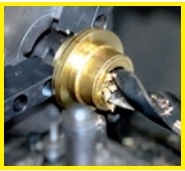

Reworking within 24h-service possible. Custom made parts on request.

General Tolerances for Keyways DIN 6885 (Dimensions in mm)

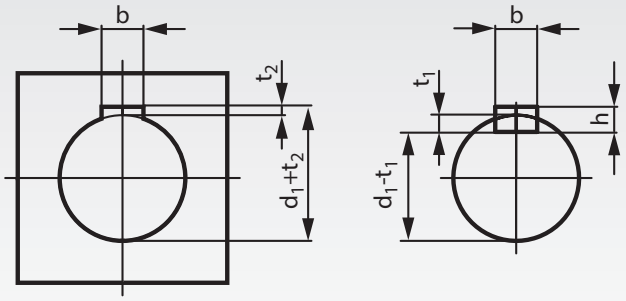

High Version Form (Sheet 1)

For Shaft-Ø d_1 over	to	Shaft Keyway b* Tight Fit P9 Loose Fit N9	Hub Keyway b* Tight Fit P9 Loose Fit JS9	h	t_1 with Clearance	t_2 with Clearance	t_2 with Oversize	Fastening Thread Recommend
6	8	2	2	2	$1{,}2^{+0{,}1}$	$1{,}0^{+0{,}1}$	–	M3
8	10	3	3	3	$1{,}8^{+0{,}1}$	$1{,}4^{+0{,}1}$	$0{,}9^{+0{,}1}$	M3
10	12	4	4	4	$2{,}5^{+0{,}1}$	$1{,}8^{+0{,}1}$	$1{,}2^{+0{,}1}$	M5
12	17	5	5	5	$3{,}0^{+0{,}1}$	$2{,}3^{+0{,}1}$	$1{,}7^{+0{,}1}$	M6
17	22	6	6	6	$3{,}5^{+0{,}1}$	$2{,}8^{+0{,}1}$	$2{,}2^{+0{,}1}$	M6
22	30	8	8	7	$4{,}0^{+0{,}2}$	$3{,}3^{+0{,}2}$	$2{,}4^{+0{,}2}$	M8
30	38	10	10	8	$5{,}0^{+0{,}2}$	$3{,}3^{+0{,}2}$	$2{,}4^{+0{,}2}$	M8
38	44	12	12	8	$5{,}0^{+0{,}2}$	$3{,}3^{+0{,}2}$	$2{,}4^{+0{,}2}$	M8
44	50	14	14	9	$5{,}5^{+0{,}2}$	$3{,}8^{+0{,}2}$	$2{,}9^{+0{,}2}$	M10
50	58	16	16	10	$6{,}0^{+0{,}2}$	$4{,}3^{+0{,}2}$	$3{,}4^{+0{,}2}$	M10
58	65	18	18	11	$7{,}0^{+0{,}2}$	$4{,}4^{+0{,}2}$	$3{,}4^{+0{,}2}$	M12

High Version for Machine Tools (Sheet 2)

For Shaft-Ø d_1 over	to	Shaft Keyway b* Tight Fit P9 Loose Fit N9	Hub Keyway b* Tight Fit P9 Loose Fit JS9	h	t_1 with Clearance	t_2 with Clearance	Fastening Thread Recommend
10	12	4	4	4	$3{,}0^{+0{,}1}$	$1{,}1^{+0{,}1}$	M5
12	17	5	5	5	$3{,}8^{+0{,}1}$	$1{,}3^{+0{,}1}$	M6
17	22	6	6	6	$4{,}4^{+0{,}1}$	$1{,}7^{+0{,}1}$	M6
22	30	8	8	7	$5{,}4^{+0{,}2}$	$1{,}7^{+0{,}2}$	M8
30	38	10	10	8	$6{,}0^{+0{,}2}$	$2{,}1^{+0{,}2}$	M8
38	44	12	12	8	$6{,}0^{+0{,}2}$	$2{,}1^{+0{,}2}$	M8
44	50	14	14	9	$6{,}0^{+0{,}2}$	$2{,}6^{+0{,}2}$	M10
50	58	16	16	10	$7{,}5^{+0{,}2}$	$2{,}6^{+0{,}2}$	M10

*The tolerance fields stated for the keyway width usually refer to milled keyways.
For the width of reamed keyways ISO-quality IT8 (i.e. P8 instead of P9, N8 instead of N9 and JS8 instead of JS9) is recommended.
For sliding fit tolerance field H9 for for the shaft keyway and D10 for the hub keyway are recommended.

General Tolerances for Length Dimensions (DIN ISO 2768 T1)

Tolerance Class Short Symbol	Description	Limiting Sizes in mm for Nominal Measuring Range 0.5 to 3	over 3 to 6	over 6 to 30	over 30 to 120	over 120 to 400	over 400 to 1000	over 1000 to 2000	over 2000 to 4000
f	fine	±0.05	±0.05	±0.1	±0.15	±0.2	±0.3	±0.5	-
m	medium	±0.1	±0.1	±0.2	±0.3	±0.5	±0.8	±1.2	±2
c	rough	±0.2	±0.3	±0.5	±0.8	±1.2	±2	±3	±4
v	very rough	-	±0.5	±1	±1.5	±2.5	±4	±6	±8

General Tolerances for the Radius of Curvature and Angular Dimensions (DIN ISO 2768 T1)

Tolerance Class Short Symbol	Description	Radius of Curvature and Chamfers Limiting Sizes in mm for Nominal Measuring Range 0.5 to 3	over 3 to 6	over 6	Angular dimensions Limiting Sizes in Degrees and Minutes for Nominal Measuring Range (Short Side) to 10	over 10 to 50	over 50 to 120	over 120 to 400	over 400
f	fine	±0.2	±0.5	±1	±1°	±0°30′	±0°20′	±0°10′	±0°5′
m	medium	±0.2	±0.5	±1	±1°	±0°30′	±0°20′	±0°10′	±0°5′
c	rough	±0.4	±1	±2	±1°30′	±1°	±0°30′	±0°15′	±0°10′
v	very rough	±0.4	±1	±2	±3°	±2°	±1°	±0°30′	±0°20′

General Tolerances for Shape and Situation (DIN ISO 2768 T2)

Tolerance Class	Straightness and Planeness Nominal Range in mm to 10	over 10 to 30	over 30 to 100	over 100 to 300	over 300 to 1000	over 1000 to 3000	Right Angularity Nominal Range in mm to 100	over 100 to 300	over 300 to 1000	over 1000 to 3000	Symmetry Nominal Range in mm to 100	over 100 to 300	over 300 to 1000	over 1000 to 3000	Running
H	0,02	0,05	0,1	0,2	0,3	0,4	0,2	0,3	0,4	0,5	0,5	0,5	0,5	0,5	0,1
K	0,05	0,1	0,2	0,4	0,6	0,8	0,4	0,6	0,8	1	0,6	0,6	0,8	1	0,2
L	0,1	0,2	0,4	0,8	1,2	1,6	0,6	1	1,5	2	0,6	1	1,5	2	0,5

ISO - Tolerances for Shafts and Bores

Bore Tolerances:
Marked by capital letter and number. The capital letter signifies the position of the tolerance field in relation to the nominal dimension. The number is a reference number signifying the tolerance grade. The bigger this reference number, the bigger is the tolerance field, see table.

Shaft Tolerances:
Marked by small letter and number. The small letter signifies the position of the tolerance field in relation to the nominal dimension. The number is a reference number signifying the tolerance grade. The bigger this reference number, the bigger is the tolerance field, see table.

Bore Tolerance, Top and Bottom Dimensions in µm

Nominal-Ø Bore (mm)		E8		E9		F7		G7		H6		H7		H8		H9	
Over	to	Top	Bottom	Top	Bottom	Top	Bottom	Top	Bottom	Top	Bottom	Top	Bottom	Top	Bottom	Top	Bottom
3	6	+38	+20	+50	+20	+22	+10	+16	+4	+8	0	+12	0	+18	0	+30	0
6	10	+47	+25	+61	+25	+28	+13	+20	+5	+9	0	+15	0	+22	0	+36	0
10	18	+59	+32	+75	+32	+34	+16	+24	+6	+11	0	+18	0	+27	0	+43	0
18	30	+73	+40	+92	+40	+41	+20	+28	+7	+13	0	+21	0	+33	0	+52	0
30	50	+89	+50	+112	+50	+50	+25	+34	+9	+16	0	+25	0	+39	0	+62	0
50	80	+106	+60	+134	+60	+60	+30	+40	+10	+19	0	+30	0	+46	0	+74	0
80	120	+126	+72	+159	+72	+71	+36	+47	+12	+22	0	+35	0	+54	0	+87	0
120	180	+148	+85	+185	+85	+83	+43	+54	+14	+25	0	+40	0	+63	0	+100	0
180	250	+172	+100	+215	+100	+96	+50	+61	+15	+29	0	+46	0	+72	0	+115	0

Nominal-Ø Bore (mm)		H11		J7		JS9		JS10		K7		M7		N7		P9	
Over	to	Top	Bottom	Top	Bottom	Top	Bottom	Top	Bottom	Top	Bottom	Top	Bottom	Top	Bottom	Top	Bottom
3	6	+75	0	+5	-7	+15	-15	+24	-24	-	-	0	-12	-4	-16	-12	-42
6	10	+90	0	+8	-7	+18	-18	+29	-29	+5	-10	0	-15	-4	-19	-15	-51
10	18	+110	0	+10	-8	+22	-22	+35	-35	+6	-12	0	-18	-5	-23	-18	-61
18	30	+130	0	+12	-9	+26	-26	+42	-42	+6	-15	0	-21	-7	-28	-22	-74
30	50	+160	0	+14	-11	+31	-31	+50	-50	+7	-18	0	-25	-8	-33	-26	-88
50	80	+190	0	+18	-12	+37	-37	+60	-60	+9	-21	0	-30	-9	-39	-32	-106
80	120	+220	0	+22	-13	+44	-44	+70	-70	+10	-25	0	-35	-10	-45	-37	-124
120	180	+250	0	+26	-14	+50	-50	+80	-80	+12	-28	0	-40	-12	-52	-43	-143
180	250	+290	0	+30	-16	+58	-58	+93	-93	+13	-33	0	-46	-14	-60	-50	-165

Shaft Tolerances, Top and Bottom Dimensions in µm

Nominal-Ø of the Shaft (mm)		e8		f7		f8		g6		h6		h7		h8		h9	
Over	to	Top	Bottom	Top	Bottom	Top	Bottom	Top	Bottom	Top	Bottom	Top	Bottom	Top	Bottom	Top	Bottom
3	6	-20	-38	-10	-22	-10	-28	-4	-12	0	-8	0	-12	0	-18	0	-30
6	10	-25	-47	-13	-28	-13	-35	-5	-14	0	-9	0	-15	0	-22	0	-36
10	18	-32	-59	-16	-34	-16	-43	-6	-17	0	-11	0	-18	0	-27	0	-43
18	30	-40	-73	-20	-41	-20	-53	-7	-20	0	-13	0	-21	0	-33	0	-52
30	50	-50	-89	-25	-50	-25	-64	-9	-25	0	-16	0	-25	0	-39	0	-62
50	80	-60	-106	-30	-60	-30	-76	-10	-29	0	-19	0	-30	0	-46	0	-74
80	120	-72	-126	-36	-71	-36	-90	-12	-34	0	-22	0	-35	0	-54	0	-87
120	180	-85	-148	-43	-83	-43	-106	-14	-39	0	-25	0	-40	0	-63	0	-100
180	250	-100	-172	-50	-96	-50	-122	-15	-44	0	-29	0	-46	0	-72	0	-115

Nominal-Ø of the Shaft (mm)		h11		j6		k6		m6		n6		p6		r6		s6	
Over	to	Top	Bottom	Top	Bottom	Top	Bottom	Top	Bottom	Top	Bottom	Top	Bottom	Top	Bottom	Top	Bottom
3	6	0	-75	+7	-1	-	-	+12	+4	+16	+8	+20	+12	+23	+15	+27	+19
6	10	0	-90	+7	-2	+10	+1	+15	+6	+19	+10	+24	+15	+28	+19	+32	+23
10	18	0	-110	+8	-3	+12	+1	+18	+7	+23	+12	+29	+18	+34	+23	+39	+28
18	30	0	-130	+9	-4	+15	+2	+21	+8	+28	+15	+35	+22	+41	+28	+48	+35
30	50	0	-160	+11	-5	+18	+2	+25	+9	+33	+17	+42	+26	+50	+34	+59	+43
50	80	0	-190	+12	-7	+21	+2	+30	+11	+39	+20	+51	+32	+62	+43	+78	+59
80	120	0	-220	+13	-9	+25	+3	+35	+13	+45	+23	+59	+37	+76	+54	+101	+79
120	180	0	-250	+14	-11	+28	+3	+40	+15	+52	+27	+68	+43	+93	+68	+133	+108
180	250	0	-290	+16	-13	+33	+4	+46	+17	+60	+31	+79	+50	+113	+84	+169	+140

Fits: Application of Common Shaft Tolerances and Bore Tolerances

Hole basis fit:
The fits stated below are for the common, standard bores with the matching shaft.

Shaft basis fit:
Stated are the fits for the common, standard shafts with the matching bores.

Press and Transition Fits

Name of Fit	Basic Bore with Shaft	Bore with Basic Shaft
Press fit: parts can be fitted using strong pressure or through heating or cooling; bronze rims on gear bodies, bearing bushes in housings, wheel hubs, lever hubs etc., couplings on shaft ends. Needs no extra securing against turning.	H7 / s6 H7 / r6	S7 / h6 R7 / h6
Driving fit: parts can be fitted using pressure; wheel rims on wheel bodies, bearing bushes in housings and round hubs, pulleys on axes, rotors on motor shafts, couplings on shaft ends, drill bushings. Has to be secured against turning.	H7 / n6	N7 / h6
Force fit: parts can be fitted using a wooden hammer; gearing, belt pulleys on shorter shafts, couplings on shaft ends, piston pin, tight cylinder bolts. Has to be secured against turning.	H7 / m6	M7 / h6
Tight fit: parts can be easily fitted using a hand-held hammer; gearing, belt pulleys, couplings, hand wheels, brake disks on longer shafts and shaft ends. Has to be secured against turning.	H7 / k6	K7 / h6
Sliding fit: parts can be fitted with a hammer or by hand; for easily assembled or disassembled gears, belt pulleys, hand wheels, bushes. Has to be secured against turning.	H7 / j6	J7 / h6

Clearance Fit

Name of Fit	Basic Bore with Shaft	Bore with Basic Shaft
Sliding fit: parts can just be moved by hand; for sliding parts and guides, centring flanges, change gears, tailstock sleave, adjusting rings.	H7 / h6	H7 / h6
Tight running fit: parts that can be moved without noticeable play; cange gears, moveable wheels, clutches.	H7 / g6	G7 / h6
Running fit: parts that can be moved with noticeable play; slide bearings in general, main bearings in machine tools, slide bushes on shafts.	H7 / f7	F7 / h6
Loose running fit: parts with generous play; shafts with multiple bearings (slide bearings), slide bearings in general.	H7 / e8	E8 / h6
Sliding fit: parts can be easily moved; gears to be pushed on shafts, disks, slidable clutches, spacer sleeves.	H8 / h9	H8 / h9
Loose running fit: parts with generous play; main bearings of crankshafts, pistons in cylinders, pump bearings and lever bearings.	H8 / e8	E9 / h9

Centre Holes DIN 332-2

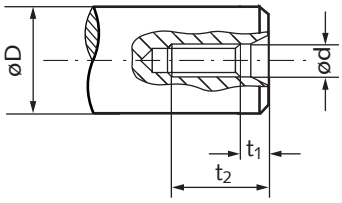

øD mm	ød mm	t_1 mm	t_2 mm
≤ 13	M4	3,2	10,0
14 - 16	M5	4,0	12,5
17 - 21	M6	5,0	16,0
22 - 24	M8	6,0	19,0
25 - 30	M10	7,5	22,0
31 - 38	M12	9,5	28,0
39 - 50	M16	12,0	36,0
51 - 85	M20	15,0	42,0

Material Standards Thermoplast, Non-Reinforced (at +23°C)

Polyacetal and POM are types of Polyoxymethylen-Copolymers (also called Polyacetal-Copolymers).
Chemically, both materials are nearly the same. To have an easy distinction in the catalogue, we use the material names like this:
Polyacetal = moulded parts: Low cost, but not very precisely.
POM = turned / milled parts: More expensive, but higher precision.

Mechanical Data

		POM	Polyacetal (Resin)
Characteristic	-	opaque vitreous	opaque vitreous
Density	p g/cm³	1.41	1.41
Yield stress	σs N/mm²	68	65
Elongation at break	εR %	25 - 40	40
Bulk modulus (Tensile Test)	Ez N/mm²	3100	3100
Ball hardness (10 s)	HK N/mm²	140	140
Impact Strength	an kJ/m²	n. a.	n. a.
Creep strength after 1000 h at static load	σs, 1000 N/mm²	40	40
Creep stress for 1% elongation after 1000 h	σ1, 1000 N/mm²	13	13
Coeff. of sliding friction p=0.05 N/mm² v=0.6 m/s against steel hardened and ground	μ -	0.32	0.32

Thermal Data

Sliding wear Conditions as above	V µm/km	4.6	8.9
Melting point Ts or dynamic glass transition temp. Tu•	Ts Tu °C	165	165
Heat resistance acc. to ISO-R75 . A	Fiso °Ci A B	105	110
Temperature limit of the application Short term	Tmo °C	140	140
Temperature limit of the application Permanent	Tmt °C	100	100
Thermal diffusivity	λ w K · m	0.31	0.31
Specific heat capacity	c kJ/kg · K	1.5	1.5
Linear coefficient of expansion at +20°C	α 10-5 · 1/°C	10	10

Electrical Data

		POM	Polyacetal (Resin)
Dielectric constant (10⁵ Hz)	εr –	3.7	3.5
Dielectric loss factor (10⁵ Hz)	tanδ -	0.005	0.003
Specific volume resistance	pD Ohm · m	10^{14}	10^{14}
Dielectric strength	Ed kV/mm	> 20	> 20
Creep resistance	- -	KA 3c	KA 3c

Various Data

Moisture absorption NK 23/50 (satiable)	CWN %	0.3	0.3
Water absorption (satiable)	Cws %	0.2	0.5
Max. elongation due to moisture in NK 23/50	ΔI/IN %	0.15	0.1
Combustibility acc. to ASTM D 635 bz. UL-55	–	b.	b.
Performance at outdoor exposure		– (UV sensitive)	– (UV sensitive)

Chemical Resistance

Acids diluted	–	–
Alkali (lyes), diluted	+	+
Hydrocarbons Saturated oils, fats	+	+
Aromatic compounds (benzol), fuels	+	+
Ketone, Ester	(+)	(+)
Chlorinated hydro carbon (trichloroethylene)	–	–
Hot water, laundry lye	–	(+)

\+ = resistant
(+) = limited resistance
– = non-resistant

The values were calculated from various spot checks taken as average values. If nothing else is stated, the test was carried out using plastic die casts. Standard tests are carried out in the standard climate 23/50 according to DIN 50 014

Food compatibility
For external contact to food at short time , both kinds of plastic are physiological harmless. Please follow the federal law and regulations for your country. Also pay attention to your special operation conditions (for example temperature, ph-value of food).

Some plastics of different suppliers have a FDA-certificate (Food and Drugs Association of the USA). The plastics should not be in contact with food with more than 15% Alcohol or with a ph-value below 2.5.

Weather resistance
Polyacetal and POM are negatively affected by ultraviolet light, its good physical properties get worse if it is exposed to sunlight over a longer period. Remedy: use light-stabilized types.

Thread Dimensions and Fastening Torques

Thread designations: DIN/ISO Standard Threads with metrical sizes are designated without naming the pitch. The pitch is only named, if it is a fine thread or a special pitch (e.g. fine thread M14x1.5).

Validity: The sizes are like DIN 261 for metrical standard threads. The fastening torques are valid for common machine bolts with standard hexagon head or internal hexagon head.

Calculation basics:
Screw yield: 90% use.
Friction coefficient μ = 0.14 (new bolt).

Note: These torques are common clues. The nut thread (thread bore in casing) has to be strong enough.
Special bolts may need diverse torques.
The instructions of the machine producer must be followed.
For screws with special coating or lubricated screws, the fastening torques must be reduced.

Dimensions			Strength / Fastening Torque						STAINLESS
Thread	Pitch	Bore hole*	4.6	5.6	6.9	8.8	10.9	12.9	A2-70**
Size	mm	mm	Nm	Nm	Nm	Nm	Nm	Nm	Nm
M2	0,4	1,6	0,123	0,162	0,314	0,373	0,520	0,628	0,36
M2,5	0,45	2,05	0,284	0,373	0,726	0,863	1,206	1,451	0,73
M3	0,5	2,5	0,441	0,588	1,128	1,344	1,883	2,256	1,10
M3,5	0,6	2,9	0,677	0,902	1,736	2,060	2,893	3,481	1,69
M4	0,7	3,3	1,00	1,34	2,60	3,04	4,32	5,15	2,50
M5	0,8	4,2	1,92	2,65	5,10	6,03	8,48	10,20	5,40
M6	1	5	3,43	4,51	8,73	10,30	14,71	17,65	9,60
M8	1,25	6,8	8,24	10,79	21,58	25,50	35,3	42,2	23,0
M10	1,5	8,5	16,67	21,58	42,17	50,0	70,6	85,3	46,0
M12	1,75	10,2	28,4	38,2	73,6	87,3	123	147	75,0
M14	2	12	45,1	60,8	117	138	194	235	118
M16	2	14	69,6	93,2	179	211	299	358	180
M18	2,5	15,5	95,1	128	245	289	412	490	250
M20	2,5	17,5	135	180	384	412	579	696	352
M22	2,5	19,5	182	245	471	559	785	941	338
M24	3	21	231	309	598	711	1000	1196	494
M27	3	24	343	461	888	1049	1481	1775	674
M30	3,5	26,5	466	623	1206	1422	2010	2403	?
M33	3,5	29,5	633	848	1628	1932	2716	3266	?
M36	4	32	814	1089	2099	2481	3491	4197	?

* Recommend bore size for threading.

** Stainless, medium strength.

Special Fastening Torques for some MÄDLER® Products

The fastening torques in the table are for following MÄDLER® Products:
Clamp collars single split and double split, rigid couplings TR, MAS and MAT.

	Fastening Torque			
	clamp hub screw		set screw	
Thread	Steel	Stainless Steel	Steel	Stainless Steel
Size	Nm	Nm	Nm	Nm
M2	0,60	0,36	—	—
M2,5	1,21	0,73	0,57	0,44
M3	2,10	1,10	0,92	0,73
M4	4,60	2,50	2,20	1,76
M5	9,5	5,4	4,0	3,2
M6	16,0	9,6	7,2	5,8
M8	39,0	23,0	17,0	13,6
M10	77,0	46,0	33,0	26,4

Operating and maintenance instructions

on the internet at www.maedler.de

in the Section Downloads

On our website you can find operating and maintenance instructions in various languages for all our technically-sophisticated products. We are continuously extending this list of instructions.



Instructions available:	Language		
Bevel Gearboxes DZA, DZR	German	English	French
Bevel Gearboxes KU/I, KUM	German	English	French
Chain Tensioners SPANNBOX®, SPANNBOY®	Deutsch	English	
Continuously Variable Geared Motors MUN/I	German	English	
Couplings DX	German	English	
Couplings RN, RNG, RNH, RNI, RNK, RNT	German	English	
Couplings BW / BOS / BOZ	German	English	French
Electronic Drip Oilers ELO	German	English	
Frequency Converters FU6	German		
Frequency Converters RoFre 897	German		
Helical Gear Boxes BT/I	German	English	
Helical Geared Motor HR/I	German	English	
Helical Geared Motor NR/I	German	English	French
Linear Drives (Actuator Systems) GR/I	German	English	
Motor Controllers SFRG 05	German		
Motor Controllers SFRG 3	German		
Precision Worm Gear Sets	German		
Safety Clutches CM	German		
Safety Clutches SI	German	English	French
Shaft Mounted Gearboxes BOC/I	German	English	
Sliding Hubs FA	German		
Sliding Hubs FS	German	English	
Sliding Hubs ROBA®	German		
Sliding Hubs with Coupling RNR	German		
Slip Clutches KF	German	English	
Slip Clutches R2, R6	German		
Standard Three-Phase-Motors SM/I	German		
Taper Bushes	German	English	French
Telescopic Slides Accuride	German	English	French
Worm Geared Motors HMD I / HMD II	German	English	French
Worm-Geared Motors MEG / MEK / MH / MZ	German	English	French
Worm-Geared Motors R / RH / RL / RM / RS	German	English	French
Worm-Geared Motors SRM / SRS	German	English	French
Worm-Geared Motors SZM, ZMD	German	English	French
Worm Gear Screw Jacks NP/I	German		
Worm Gear Units G/II	German	English	French
Worm Gear Units ZM	German	English	French





General Description

Customary, conical slotted clamping bush with feather keyway for an easy and fast mounting of driving elements on shafts.

Versions of Taper Bushes

The bushes are available with various outer dimensions. For every outer dimension, there are a large number of bore sizes matching several shaft diameters. The bushes are always supplied with a feather keyway DIN 6885.

Identification

4-digit number to identify the outer dimensions and 2 to 3-digit number (or inch identification) to state the bore size.

Amount and Version of Screws

To size 3030 two stud screws with internal hexagon. From size 3525 three hexagon socket head cap screws.

Requirements Regarding the Driving Element

The component that is to be mounted must have the matching bush adapter (in Taper version). Using Taper versions makes sense in serial production. For one-off production the use of cylindrical clamping bushes is more economical. These are available in many different versions.

Available Driving Elements

There are various sprockets, pulleys and couplings with Taper adapter available from stock.

Requirements Regarding the Shaft

Cylindrical shaft with a diameter tolerance of +0.05mm / -0.125 mm. The best results are achieved with ISO-tolerance h6. Up to a shaft diameter of 100mm cost-effective drawn shafts with tolerance h9 may also be used.

Application with and without Parallel Key

Due to the high clamping force a parallel key is not necessarily required for medium torques (e.g. with pulleys). If the shaft has a keyway, and no parallel key is used, the keyways of shaft and bush should be mounted with an offset of 180 degrees. For highest torques a shaft with keyway and parallel key DIN 6885/1 must be used (the following sizes require a flat parallel key: 1008-24, 1008-25, 1108-28, 1310-35, 1610-42, 1615-42, 2517-65).

Taper Clamping Bushes – Mounting and Demounting

Mounting

- Clean and degrease all contact surfaces.
- Set the clamping bush into the hub making sure that all bores align. One threaded bore must always align with one of the smooth half-bores of the counterpart
- Lubricate the mounting screws and loosely screw in the threads of the component to be mounted.
- Put the parallel key into the shaft (if a parallel key is used).
- Push the component to be mounted onto the shaft, together with the entered bush With feather key: Align the keyway with the parallel key. Without Feather key: Make sure the keyway of the bush is offset by 180 degrees to the shaft keyway, if there is one.
- If necessary use light blows to drive the bush into position.
- Fasten the mounting screws evenly, until the max. torque is reached (see table).
- Improving the fit of the bush: drive the bush further into the component to be mounted with light blows (using a wooden block or a soft metal bush).
- Retighten the mounting screws with the maximum torque (see table). Alternatively the bush can also be retightened after an operating time of 30 to 60 minutes.
- Fill the empty holes (used for forcing off) with grease, to protect them against contamination (depending on the size there are one or two forcing threads).

Demounting

- Loosen screws and screw them out completely.
- Turn screws into the threaded bores of the bush (forcing thread). Depending on the size there are one or two forcing threads.
- Fasten the screws until the driving element disengages from the bush.
- Take driving element and bush off the shaft.
  If necessary, the bush can be forced apart using a screwdriver. (drive screwdriver carefully into the slot provided).

Bush Nr.	Spanner Size mm	Screws Amount	Thread Size Inch	Fastening Torque Nm	lb-ft	lb-in
1008	3	2	1/4-20" x 1/2"	5,6	4.1	50
1108	3	2	1/4-20" x 1/2"	5,6	4.1	50
1210	5	2	3/8-16" x 5/8"	20	14.8	177
1215	5	2	3/8-16" x 5/8"	20	14.8	177
1610	5	2	3/8-16" x 5/8"	20	14.8	177
1615	5	2	3/8-16" x 5/8"	20	14.8	177
2012	6	2	7/16-14" x 7/8"	30	22.1	266
2017	6	2	7/16-14" x 7/8"	30	22.1	266
2517	6	2	1/2-13" x 1"	50	36.9	443
2525	6	2	1/2-13" x 1"	50	36.9	443
3020	8	2	5/8-11" x 1 1/4"	90	66.4	800
3030	8	2	5/8-11" x 1 1/4"	90	66.4	800
3525	10	3	1/2-13" x 1 1/2"	90	66.4	800
3535	10	3	1/2-13" x 1 1/2"	90	66.4	800
4030	12	3	5/8-11" x 1 3/4"	170	125.4	1505
4040	12	3	5/8-11" x 1 3/4"	170	125.4	1505
4535	14	3	3/4-10" x 2"	190	140	1680
4545	14	3	3/4-10" x 2"	190	140	1680
5040	14	3	7/8-9" x 2 1/4"	270	200	2390
5050	14	3	7/8-9" x 2 1/4"	270	200	2390

Rolling bearings at MÄDLER®:



Ball bearings, open



Ball bearings, 2Z



Ball bearings, 2RS

SKF®

The premium brand
- for the sophisiticated application

MÄDLER® GEGRÜNDET 1882

The reliable brand
- the inexpensive option



Angular contact ball bearings



Self aligning ball bearings



Cylindrical roller bearings



Spherical roller bearings



Tapered roller bearings

The rolling bearings are to find:

- in this catalog page 416
- on the internet at www.maedler.de

Please use our website

at www.maedler.de

Put in a search word or part number and go directly to the product page

Find the PDF-catalogue page and further information

Manual instructions, certificates, safety data sheets in the section Downloads

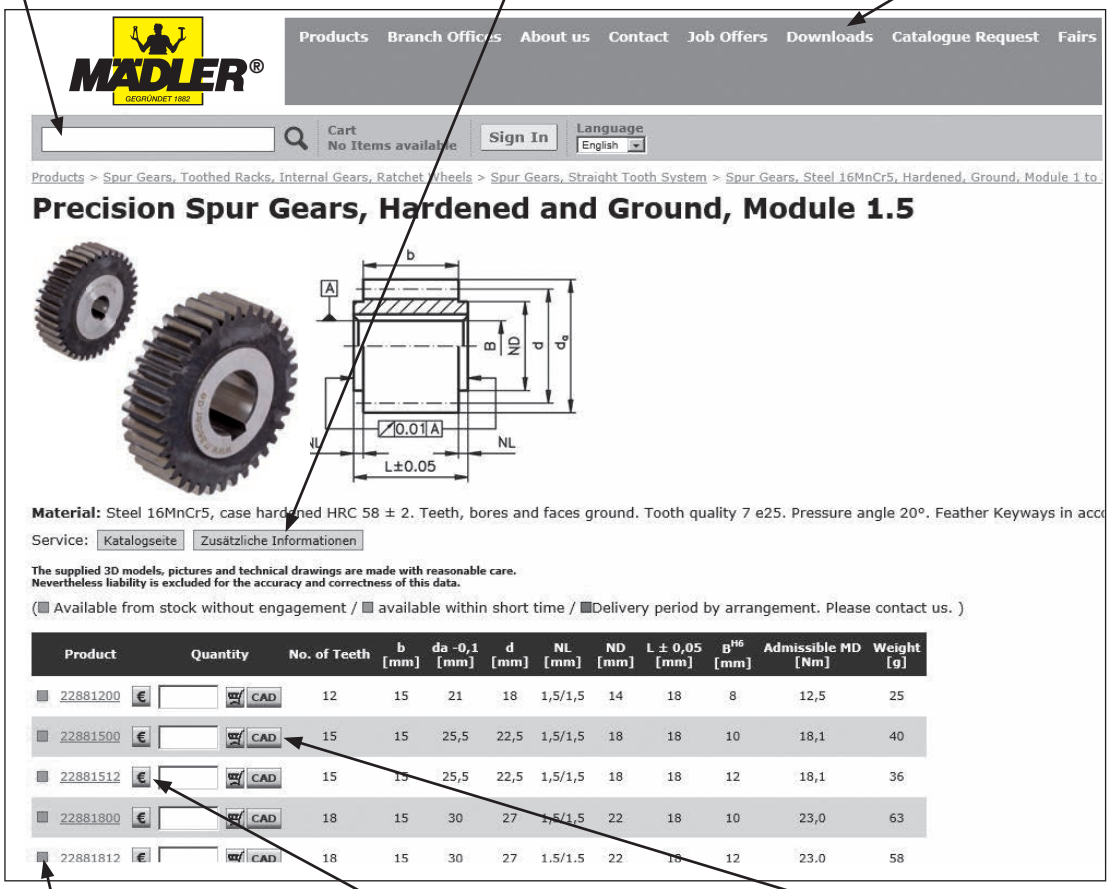

The availability of all products is shown by coloured sign

Drag the mouse onto the currency-symbol to see the prices*

Download CAD-drawings in 3D

A lot of possibilities and information:

- **Download of PDF catalogues in different languages.**
- **See all our branches and distributors.**
- **Make easily your order online and follow your parcel.**
- ***MÄDLER*®-Tools: Use our selection- and calculation tools.**
- **News: Useful information about exhibitions and others.**
- **Newsletter: Monthly information per e-mail.**

* Prices and terms of delivery depend on the country.

www.maedler.de

...the entire MÄDLER® range with CAD files on the Internet

We present the entire ***MÄDLER***® range with CAD files and ***MÄDLER***® info, continuously updated, on the internet. Fast access to the data, fast ordering by internet.
Orders by internet, phone, fax or e-mail: We guarantee delivery at short notice.





Dimensions and other information in this catalogue display the current state of technology. We reserve the right for changes.
This catalogue was created with due diligence, but errors might still occur. We refuse to accept any claims in this respect. We reserve the right to alter dimensions, and to change or remove single products and product groups without prior notice. Our general conditions of sales, delivery and payment can be found on the last page of this catalogue.

...we keep things moving

Hinges at MÄDLER®:



on the internet at www.maedler.de

A
ACCURIDE® **Slides / Overview** ... **769**
Aerosols (Maintenance Sprays) ... 815
Actuator Systems ... 758
Adjustable Clamp Nuts ... 555
Adjustable Clamping Levers ... 550
Adjusting Rings ... 452
Air Preparation Equipment ... 634
Aluminium Spray ... 751
Angle Joints ... 430
Angular Drives (Plastic Bevel gears on Plate) ... 607
Anti-Vibration Elements ... 600
Arch Handles ... 560
Articulated Feet ... 597
Assembly Plug for Ball Cups ... 508
Assortment Boxes ... 576

B
Ball Bearings ... 436
Ball Flange Bearings ... 427
Ball Head Precision Adjusters ... 594
Ball Joints ... 405, 413
Ball Knobs ... 545
Ball Pillow Block Bearings ... 426
Ballscrew Spindle Drives ... 317
Ball Valves (manual) ... 644
Ball-Ended Thrust Screws ... 524
Bar Material Sintered Bronze ... 446
Bellows ... 415, 764
Bevel Gearboxes / Overview ... **654**
Bevel Gears / Overview ... **267**
Blow Guns ... 649
Bolts for T-Slots ... 518
Bolts with Cotter Pin Hole DIN 1434 Assortment Box ... 576
Bonding Products Loctite® ... 812
Bore-Reducing Bushes ... 407
Box Couplings ... 367
Bracket Hinge Mountings for Pneumatic Cylinders ... 622
Bushes ... 445

C
Cabinet "U" Handles ... 558
Cam-Action Indexing Plunger ... 532
Cap Bearings ... 420
Capacitors ... 722
Cardan Joints / Overview ... **403**
Chain Breakers for Roller Chains ... 58
Chain Couplings ... 384
Chain Lubricating Spray ... 815
Chain Puller for Roller Chains ... 58
Chain Riders ... 116
Chain Tensioners ... 111
Chain Tensioning Wheels with Bearing ... 109, 115
Chains (Roller Chains) ... 35
Chains (Round-Link Steel Chains DIN 766A) ... 119
Clamp Collars for Round Shafts (Slotted and Two-Part) ... 454
Clamp Collars for Splined Shafts ... 329
Clamp Collars for Threaded Bars ... 457
Clamp Mounts for Shock Absorbers ... 611
Clamp Nuts ... 555
Clamping Bolts for Quick Clamp® ... 573
Clamping Bushes / Overview ... **330**
Clamping Levers ... 550
Clamping Sets / Overview ... **330**
Clevis Joints ... 472
Clevises for Pneumatic Cylinders ... 623
Clevises ... 472
Compact Cylinders ... 616
Compressed Air Filters ... 635
Conical Seats DIN 6319 ... 523
Connecting Links for Roller Chains ... 37
Connecting Links for Round-Link Steel Chains ... 119
Connecting Shafts ... 766
Continuously Variable Geared Motors MUN/I ... 753
Control Knobs ... 537
Control Levers ... 557
Control Units (Motor controllers) ... 696
Corrosion Protection Spray ... 815
Couplings / Overview ... **364**
Cranks ... 563
Cup Rollers ... 508
Cylinders (Pneumatic) ... 615, 616, 618
Cylindrical Bushes ... 447
Cylindrical Handles ... 547
Cylindrical Roller Bearings ... 441

D
Disconnection Tool (for pneumatic tubes) ... 647
Drill Bushes ... 451
Drip-Feed Oilers ... 583
Driven Idlers, (Travel wheel systems) ... 124

E
Eccentric Clamping Levers ... 554
Edge Trims ... 580
Electric Motors / Overview ... **655**
Electronic Drip Feed Oiler ... 584
ES-Bolts for Clevises ... 473
Exhaust Filters (Pneumatic) ... 645
Extension Nuts ... 512
Extension slides / Overview ... **769**

F
Fast Connectors (Pneumatic Fittings) ... 638
Feather Keys Assortment Box ... 577
Feather Keys ... 578
Filter / Regulators (Pneumatic) ... 636
Fixing Plates for Timing Belts ... 171
Flange Bearings ... 422
Flange Nuts Trapezoidal Thread ... 314, 316
Flange Shaft Blocks ... 476
Flanged Drill Bushes ... 451
Flanges for Timing Belt Pulleys ... 170
Flat Gearboxes ... 662
Folding Handles ... 561
Foot Plate Mountings for Pneumatic Cylinders ... 620, 625
Frequency Inverters ... 698
Front Flanges for Pneumatic Cylinders ... 620, 626

G
Gear Lever Handles ... 546
Gear Racks / Overview ... **255**
Gearboxes, Geared Motors / Overview ... **654**
Geared Motors RBM/I for Travel-Wheel System ... 126
Gears / Overview ... **194**
General Basics for Bevel Gears ... 268
General Basics for Roller Chains ... 35
General Basics for Spur Gears ... 196
General Basics for Timing Belt Drives ... 129
General Basics for Trapezoidal-Thread Spindles ... 305
General Basics for Universal Joints ... 373 - 374
General Basics for Worm Gears ... 294
General Technical Notes ... 816
Grips ... 538
Grub Screws DIN 6332 with Thrust Point ... 595
Guide Rails for Roller Chains ... 57

H
Hand Cranks ... 563
Hand Wheels ... 565
Handles ... 547
Hasp Wheels ... 121
Heavy-Duty Bushes PHO ... 606
Helical Gear Boxes BT/I ... 657
Helical Geared Motors / Overview ... **655**
Hexagonal Nuts, Metric Thread ... 511
Hollow Worms ... 287
Hook Spanners DIN 1810 Form A ... 517
Horizontal Clamps ... 574
Hose Coils ... 650
Hose Tailpieces ... 650

I
Idlers ... 109, 122
Igus® / igubal® ... 418, 461
Illustration index ... **9**
Imprint ... **833**
Indexing Plungers ... 532
Instant Adhesives Loctite® ... 813
Internal gears ... 249

J
Jacks (Actuators) ... 758

K
Key Steel ... 578
KL-Retainers, Assortment Box ... 575, 576
Knurled Knobs and Screws ... 543
Knurled Nuts and Screws ... 519

L
Latch Clamps ... 572
Levelling Feets ... 598
Levelling Pads ... 596
Lifting Pins ... 571
Limit Switch (Motor Emergency Stop) ... 398
Linear Bearings and Units / Overview ... **476**
Linear Drives (lifting devices) ... 758
Linear Slide Bearings ... 492
Linear Technology / Overview ... **476**
Locking Assemblies / Locking Devices / Overview ... **330**
Locknuts ... 515
Lockwashers ... 515
Loctite® ... 811
Lubricators Perma® ... 582

M
Machine Mounts ... 599
Magnetic Switches for Pneumatic Cylinders ... 627
Maintenance Instructions ... **823**
Manifold ... 642
Membrane Couplings ... 379
Metal Bellow Couplings ... 377
Metal-Rubber-Buffers ... 600
Micro-Fog Oilers ... 636
Miniature Ball Screw Spindle Drives ... 321
Miniature Profile-Rail Guides ... 505
Miniature Shock Absorbers ... 610
Miniature Slide Units ... 506
Motor Controllers ... 697
Motor Emergency Stop (Limit Switch) ... 398
Motor-Tensioning Rail Sets SPS ... 695
Mounting Blocks for Shock Absorbers ... 611
Mounting Elements for Magnetic Switches ... 625
Mounting Elements Quikclamp ... 637
Mounting Options For Driving Wheels ... **817**
Multi-Function Spray WD-40® ... 815

N
Non-Return Valves ... 647
Nuts / Bolts for T-Slots ... 518
Nuts, Metric Thread ... 511
Nuts, Trapezoidal Thread ... 313

O
Oiler ... 582
Oil-Level Sight Glasses ... 585
Operating Capacitors ... 722
Operation and Maintenance Instructions ... **823**

P
Palm Grips ... 538
Parallel Keys Assortment Box ... 577
Parallel Keys ... 578
Pillow Block Bearing ... 420, 426
Plain Bearing Bushes ... 445
Planetary Small Geared Motors PE ... 709
Pneufit® Quick Connectors ... 638
Pneumatic Elements / Overview ... **613**
Polyamide Tubes ... 648
Polyurethane Hoses ... 648
Precision Adjusters ... 588
Precision Housings for Linear Bearings / Overview ... **476**
Precision Levelling Adjusters ... 588
Precision Rail-Guide Sets ... 504
Precision Worm Gear Sets ... 295
Pressure Gauges ... 637
Pressure Regulators ... 635
Pressure Relief Valves ... 636
Profile Dampers ... 607
Profile Rail Guides ... 505
Profiled Track Rollers and Bolts ... 502
PTFE Spray ... 815

Q
Quadro Linear Bearing Units ... 476
Quality Management Certificate ... **34**
Quick Clamps ... 573
Quick Exhaust Valves ... 646

R
Radial Shaft Seals ... 443
Rail-Guide Sets ... 504
Ratchet Braces and Ratchet Wheels ... 250
Raw Material Sintered Bronze ... 446
Ready to Install Actuator Systems ... 758
Rear Clevis Mountings for Pneumatic Cylinders ... 621
Rear Eye Mountings ... 562 - 563
Rear Flanges for Pneumatic Cylinders ... 620
Rectangular Flanges for Shock Absorbers ... 611
Retaining Rings DIN 471 / DIN 472 ... 514
Retractable Handles ... 547
Revolving Ball Knobs ... 546
Reworking of Spindles ... 325, 435
Rigid Couplings ... 367
ROBA® Sliding Hubs ... 402
Rod Ends / Overview ... **458**
Rod Ends for Pneumatic Cylinders ... 624
Roller Bearings / Overview ... **416**
Roller Chains / Description ... **35**
Roller Chains with Bent Attachments ... 50
Roller chains with Straight Attachments ... 46
Roller Chains ... 37

Round Gear Racks ... 262
Round-Line Cylinders ... 618
Round-Link Steel Chains DIN 766 A ... 119
Rubber-Metal Bump Stops ... 600

S
Screw Jacks ... 758
Sealants and Sealant Removers Loctite® ... 814
Seals for Ball Bearings and Shafts ... 443
Set Collars ... 452
Sealing Caps for Angle Joints ... 475
Shaft Blocks ... 476
Shaft Collars ... 452
Shaft Nuts ... 515
Shaft Steel with Shaft Support ... 481
Shaft Steel ... 478
Shaft-Mounted Flat Gearboxes BOC/I ... 662
Shaft to Hub Connections / Overview ... 330
Shock Absorbers (Hydraulic Dampers) ... 610
Shrink Disks ... 356
Shut-off Valve (manual) ... 637
Silencers (pneumatic) ... 640, 645
Silver Steel ... 477
Single Row Roller Bearings ... 436
Sintered Bronze Blanks for Plain Bearings ... 446
Sintered Bronze Bushes ... 445
SKF® Rollerbearings / Overview ... 416
Sliding Hubs / Overview ... 365
Slip Clutches ... 394
Slotted Nuts ... 515
SL-Retainers, Assortment Box ... 575, 576
Small Geared Motors / Overview ... 655
Small Worm Geared Motors / Overview ... 655
Socket for Solenoid Valves ... 633
Socket Pins with Spring-Loaded Balls ... 571
Solenoid Shut-Off Valve (manual) ... 637
Solenoid Valves ... 629
Spacers for Precision Levelling Adjusters ... 594
SPANNBOX® / SPANNBOY® ... 111
Spare Chain Link for Round-Link Steel Chains DIN 766 A ... 119
Spare Solenoids for Solenoid Valves ... 633
Speed Controllers for DC drives ... 696
Spherical Bearings DIN 12240-1 (DIN 648) ... 469
Spherical Roller Bearings ... 441
Spherical Washers DIN 6319 ... 523
Spiders for Elastic Couplings ... 391
Spindles, Ball Drives ... 317
Spindles, Trapezoidal Threads / Overview ... 305
Splined Hubs ... 328
Splined Shafts for Timing Belts ... 166
Splined Shafts ... 327
Sprays (Aerosols) ... 815
Spring Plungers ... 524
Sprockets for Roller Chains / Overview ... 60
Sprockets for Round-Link Steel Chains ... 121
Spur Gear Shafts ... 247
Spur Gears / Overview ... 194
Stainless Steel Spray ... 815
Standard and Safety Quick-Release Couplings ... 651
Standard Cylinders (Pneumatic) ... 615
Standard Fog Oiler ... 636
Standard Motors (Three-Phase) ... 692
Standard Parts for Operating / Overview ... 529
Star Grips and Star Grip Screws ... 538
Stauffer Grease Boxes ... 586
Support Units for Spindle Drives ... 322, 432
Swing Bolts ... 522

T
Tandem Linear Bearing Units ... 476
Taper Bushes - Instructions ... 824
Taper Bushes ... 360
Tapered Rollerbearings ... 442
Telescopic Slides / Overview ... 769
Telescopic Universal-Joint Shafts ... 407, 413
Tensioning Elements for Chains ... 116
Tensioning Elements for Belts ... 182, 191
Tensioning Rollers for Timing Belt Drives ... 182
The Company ... 27
Thread Locking Products Loctite® ... 811
Threaded Bars, Metric (DIN 975 / DIN 976) ... 510
Threaded Spindles and Nuts, Trapezoidal Threads ... 305
Throttle-Type Non-Return Valves ... 646
Thrust Pads ... 595
Thrust Screws ... 524
Timing-Belt Drives / Overview ... 128
Tolerance Rings for Cup Rollers ... 509
Toothed Couplings ... 380
Trapezoidal Thread Spindles and Nuts / Overview ... 305
Travel Wheel Systems RB/I ... 124
Triangular Knobs and Screws ... 484
Tri-Ball Handles ... 542
Tube Cutters ... 589
Tubular Handles ... 647
Turnbuckle Nuts ... 513
Turret Levers ... 564

U
Universal Joints / Overview ... 403
Universal Joint Shafts ... 407, 413

V
Variable Geared Motors MUN/I ... 753
V-Belt Pulleys for Taper Bushes ... 183
V-Belt Pulleys Made From Light Alloy ... 188
V-Belt Tensioners ... 191
V-Belts ... 192
Vertical Clamps ... 573

W
Washers and Pins Assortment Box ... 577
Washers DIN 6340 ... 513
WD-40® (Multi-Function Spray) ... 815
Welding Hubs for Taper Bushes ... 362
Wing Nuts and Screws ... 544
Worm Gear Screw Jacks NP/I ... 761
Worm Gear Boxes / Overview ... 654
Worm Geared Motors / Overview ... 655
Worm Helical Geared Motors / Overview ... 655
Worms and Worm Gears/ Overview ... 284

Z
Zinc Repair Spray ... 815



Imprint

Publisher: MÄDLER GmbH Tränkestr. 6-8 D-70597 Stuttgart Tel. +49 711 720950 Fax +49 711 7209533 e-mail stuttgart@maedler.de
Commercial register: HRB Stuttgart 6889. D-U-N-S Nr.: 31-950-5848. Managing directors: Mrs. Karin Mädler, Mr. Steffen Krotz.
Catalog creation and technical documentation: Mr. Dipl.-Ing. Knut Schmidt (head), Mrs. Dipl.-Oec. Birgit Iodice, Mrs. Dunja Balic.
The original language is German. Print mistakes, errors and translation mistakes might occur.
The reprint of our catalogs or use of our texts, photos or drawings requires the explicit writtten approval of MÄDLER GmbH in Stuttgart.

MÄDLER® and MÄDLER® are registered and protected trademarks in many countries.

Terms and Conditions of MÄDLER GmbH

§ 1 General information – Area of application
Our conditions of sale shall apply exclusively; conflicting or deviating terms and conditions of the buyer are not binding for us unless expressly agreed to their validity in writing. Our conditions of sale shall also apply where we perform delivery to the buyer without reservation in spite of knowledge of conditions of the supplier which conflict with or differ from our conditions of sale. Any agreements made between us and the buyer for the purpose of execution of this contract are contained in writing in this contract. Our sales conditions apply only to entrepreneurs as defined by § 310 paragraph 1 German Civil Code (BGB).

§ 2 Quotation – Quotation documents
If the order is to qualify as an offer in accordance with § 145 BGB, we shall have 2 weeks in which to accept it. We reserve ownership and copyright on illustrations, drawings, calculations and other documents. This applies equally to documents defined as "confidential". Passing them on to third parties shall be subject to our explicit written consent. All information provided in catalogues, drawings and models regarding performance, load capacity, dimensions and weights are approximate values. As part of ongoing technical development, we reserve the right to make dimensional and constructional alterations. Upon request and at the buyer's cost we provide a technical test certificate. Reproduction of our catalogues and drawings as wells as copies of our models, even in part, requires our explicit approval in writing. Our offers are non-binding. Orders are only binding if confirmed by us or if fulfilled by sending of the goods.

§ 3 Pricing – Terms of payment
Retail customers and customers outside Germany will only be supplied on a cash before delivery basis. In the absence of any written agreements to the contrary, our prices for deliveries within Germany include free carriage and packaging; excluded are special freight and deliveries to foreign countries. Statutory VAT is not included in our prices; the applicable legal rate is stated in a separate invoice at the date of the invoice. Unless firm pricing has been explicitly agreed for a certain delivery, prices will be calculated according to our price lists valid at the time of the purchase, which also provide terms and conditions for small orders, call orders, price surcharges and return deliveries. These price lists in their currently valid form are the subject matter of conditions of sale, delivery and payment. Dispatch is carried out cash on delivery unless explicitly agreed otherwise. If delivery is not made cash on delivery, our invoices are to be settled within 30 days without any deduction. If the invoiced amount is paid within 14 days from date of invoice, the buyer is entitled to deduct a 2% discount. Discount deductions, however, shall only be permitted on condition that the buyer has settled all outstanding invoices with us or is settling them at the same time. Payment conditions for deliveries starting from EUR 1.500,00 for goods made up to specifications or samples are 50% upon receipt of confirmation of order and 50%, without deduction, within 30 days of invoice date. Partial deliveries are invoiced immediately. We shall be entitled to demand default interest amounting to 8 percentage points above the base rate, if periods of payment are exceeded. The seller reserves the right to claim damages for the enforcement of a further delay. Payment terms shall only be deemed met, if the amount payable is available to us within the delays.
Bills of exchange are accepted only upon special previous agreement. Bills of exchange and cheques are accepted only on account of performance. Where there is major deterioration in the financial circumstances of the ordering party, we are entitled to refuse to carry out further deliveries until all receivables, due or not due, are settled or a warranty is provided. Only undisputed claims or those determined with legal validity shall entitle the buyer to offset claims or retain payments. Retentions of payments must be based on the same contractual relationship as the respective accounts receivables.

§ 4 Delivery times
Deadlines and dates for deliveries are only approximate. In case of a culpable failure to keep the delivery date, there will only be a default in delivery after an extended period has been set provided the underlying purchasing contract has not been expressly agreed on as a fixed date transaction, as defined in § 286 paragraph 2 No. 4 BGB or § 376 German Commercial Code (HGB). The commencement of the delivery period specified by us depends on prior clarification of all technical questions. Fulfillment of our delivery conditions is subject to prompt and proper fulfillment of the buyer's obligations. We reserve the defense of non-performance of the contract.
If the purchaser delays acceptance or if it culpably infringes other duties of cooperation, we shall be entitled to ask for compensation, including any additional expenditure. Any further legal claims shall remain unaffected. If the conditions of paragraph (3) are met, the risk of accidental loss or of accidental degradation of the item purchased shall transfer to the ordering party when the same party defaults on debts or in acceptance. We are liable within the legal provisions to the extent that the underlying purchasing contract is a fixed date transaction as defined in § 286 paragraph 2 No. 4 BGB or § 376 German Commercial Code (HGB). We are also liable pursuant to the statutory provisions to the extent that, as a consequence of a delay in delivery that is our responsibility, the customer has the right to claim cessation of his interest in continuing the performance of the contract. Moreover, we shall be liable in accordance with statutory provisions in so far as the delay in delivery is based upon an intentional or grossly negligent contract violation for which we are responsible; we shall also be responsible for a fault caused by our representatives or vicarious agents. Insofar as the delay in delivery is not the result of an intentional breach of contract for which we are responsible, our liability for compensation is limited to the foreseeable damage that may typically occur.

We shall bear legal liability under statutory regulations if the delay in delivery for which we are responsible has been caused by the culpable violation of an essential contractual obligation; in such case, however, our liability for damages shall be limited to the foreseeable typically occurring damage. The buyer shall reserve the right to additional statutory claims and rights.

§ 5 Transport Insurance, Packaging and Costs
Provided that nothing else is stated in the order confirmation, delivery shall be considered as agreed. Deliveries within the Federal Republic of Germany are free kerbstone edge and covered by our transport insurance. Everything else requires a special agreement. If the place of delivery is within the German Federal Republic, we shall bear the cost of loading and dispatch; otherwise, the ordering party is liable for the costs. Generally, shipments outside the German Federal Republic shall be transported at the expense and risk of the purchaser and we shall select a suitable carrier or transport company. Transport packaging and all other packaging in accordance with the German Packaging Ordinance is non-returnable and becomes the Customer's property, except for pallets. The customer is obliged to dispose of the packaging material at his own expense.

§ 6 Liability for defects
All information about suitability, workmanship and application of our products, technical advice and other details are given to the best of our knowledge but do not release the customer from the obligation to perform his own examinations and tests. Claims for defects by the customer require proper fulfillment of its obligations to inspect and complain in accordance with § 377 HGB.

Provided there is a defect on the merchandise, the customer is entitled to choose between rectification of the defect or having the merchandise delivered free of defects. In case of remedying a defect we are to bear all costs which are necessary for remedying the defect, especially transport, travel, work, and material costs insofar as these costs are not increased by moving the delivery to a place other than the place of performance. If subsequent performance fails, the buyer will be entitled to choose to demand cancellation or reduction. We are liable within the legal provisions, as far as the customer asserts a claim on compensation which is based on intention or gross negligence of us, including intent or gross negligence on the part of representatives or vicarious agents.

As far as we are not accused of willful breach of contract, our liability for claims for damages is limited to the foreseeable, typically occurring damage. We shall be liable pursuant to the statutory provisions, insofar as we culpably violate an essential contractual obligation; however, in this case liability is restricted to foreseeable, typically occurring damage. Liability on account of culpable injury to life, limb or health shall not be affected; this shall also apply to mandatory liability as provided for in the product liability law. Liability shall be excluded in instances not covered in the above provisions. The statutory limit for claims in respect of a defect is 12 months, beginning with the transfer of risk. The statute of limitations in the event of a delivery recourse according to §§ 478, 479 BGB remain unaffected; it is five years, beginning from delivery of the faulty object.

§ 7 Total liability
We specifically exclude any additional form of liability, beyond that specified in §6, independent of the legal nature of the issue. This applies in particular to claims for damages resulting from fault in conclusion of contract, from other breaches of duty or from tortious claims for compensation for property damage according to § 823 BGB. As far as the liability for compensation against us is excluded or restricted, this shall be valid as well with respect to the personal liability for compensations of our employees, staff members, representatives and vicarious agents.

§ 8 Security of reservation of title
We retain the title of ordered goods until all due payments have been provided as stated in the contract (including the settlement of all outstanding current account balances). If the customer acts in a way contrary to the contractual obligations, in particular in the event of a default in payment, we shall be entitled to retrieve the goods. Our taking back of the delivery item in no way constitutes withdrawal from the contract, unless this was previously explicitly agreed in writing.

A seizure of the delivered goods shall always constitute a withdrawal from the contract. After recovery of the purchased object we are entitled to sell the latter, the amount thus realized is to be deducted from the obligations of the ordering party - less reasonable exploitation costs. The customer is obliged to handle the purchased goods with care and, in particular, the customer shall, at its own expense, sufficiently insure such goods, at their original price, against fire, water and theft damage. If maintenance and inspection work is necessary, the contracting party must conduct such work in due time at its own cost. In the event of seizures or other action by third parties, the customer must notify us immediately in writing so that we can lodge a lawsuit in accordance with § 771 German Code of Civil Procedure (ZPO).
Unless third parties are incapable of reimbursing us judicial and extrajudicial costs for an action as per § 771 ZPO, the customer shall be liable for any expenses defrayed by our company. The buyer is entitled to resell the purchased item in the ordinary course of business; however, he herewith already assigns to us all claims to the amount of the invoice sum total (including value-added tax) arising from the further assignment to its clients or to a third party, and this independently of whether or not the purchase object has been sold on without or after further processing.

The buyer remains entitled to collect this receivable even after the assignation. Our right to collect such claims remains unaffected.
However, we undertake not to collect the claim as long as the client fulfills his payment obligations arising from the collected profits, is not in default of payment and particularly if no application for the institution of bankruptcy or composition or insolvency proceedings is filed and no insolvency has occurred.
However, if this is the case we can request that the buyer informs us of the assigned claims and their debtors, provides all pertaining information and relevant documents which are necessary for us to assert our rights, and that he informs the debtors (third parties) about the assignment. The processing or modification of the purchased item by the customer will always be carried out on our behalf.

If the ordered item is processed with other objects not belonging to us, we acquire the joint ownership of the new resulting item in the ratio of the value of the object bought (final invoiced amount including value-added tax) to the other processed objects at the time of processing. Apart from this the same shall apply for the item resulting through processing as for the item delivered under reserve. If the object of sale is indivisibly mixed with other objects not belonging to us, we shall acquire co-ownership of the new object created in the ratio of the value of the delivered item (final invoice value including value-added tax) to the other mixed objects at the time of mixing.
If mixing occurs in such a way that the contractor's item is to be regarded as the principal item, it is deemed to have been agreed that the contractor transfers proportionate co-ownership to us. The purchaser keeps the herewith generated sole ownership or co-ownership for us.

As a security for our own claim, the customer also assigns to us the claims arising against a third party by integration of the ordered goods into real property. At the request of the customer, we undertake to release the securities to which we are entitled insofar as the realisable value of our securities exceeds the claims to be secured by more than 10%, the choice of the securities to be released is within our scope of responsibility.

§ 9 Provision of Materials and Samples
If the tool breaks as a result of bad prior work or defective material on the parts to be processed, relevant cost shall be borne by the customer. If work pieces provided by the customer become unusable as a result of mistakes in workmanship, with the exception of intent and gross negligence, we shall assume responsibility only for work carried out by our company. A guarantee is granted by way of subsequent improvement in such way that we carry out the same processing again, at no charge, when new work pieces are delivered to us. Our liability – with the exception of intent and gross negligence – is limited to the invoiced wage costs.

Prior to leaving our premises, the processed parts are subjected to a random inspection. Additional examination takes place only upon special agreement or against calculation of extra costs. This output check does not release the customer (recipient of goods) from his own duty to carry out an incoming goods check. We do not accept responsibility for any samples sent to us.

§ 10 Overdeliveries or underdeliveries of custom-made products
In the case of custom-made products we are allowed to make overdeliveries or underdeliveries of up to 10% of the ordered quantity, to the same conditions agreed upon in the order. Such over- or underdeliveries may not be complained, even in the case of no prior consultation.

§ 11 Jurisdiction – Place of fulfillment
Provided the buyer is a merchant, jurisdiction shall be our place of business; we are, however, entitled to sue the buyer at the court of his residence.
The law of the Federal Republic of Germany shall apply with the exception of UN international trade law.
Unless otherwise provided in the confirmation of order, place of fulfillment is the place of our business.

Status September 2017, MÄDLER GmbH





Custom-made Products

The modern production machinery and our team of specialised; skilled workers serve as a basis for another main part of our production: Custom-made products according to drawings or your specifications, from one-off production up to large series, at a good price and with short delivery times- with perfect quality control, and flexible as today's market demands: Spur toothed gears, gear racks, bevel gears, worm gears and worms, trapezoidal threaded spindles and nuts, splined shafts, spilned hubs and clamp collars.

In-house Production







The ***MÄDLER***® group produces its parts in Germany at two manufacturing sites: Stuttgart and Hamburg. There specialised workers produce our own ***MÄDLER***®-product range on the most modern CNC machinery.

One-off production according to drawings or samples up to larger series, with a perfect quality control, flexible as today's market demands.

The most important prerequisite is a highly qualified and cost-effective production and a guarantee for the shortest delivery times for all parts listed in the yellow ***MÄDLER***® catalogues and the Internet.

Another manufacturing site is in China. This joint-venture enables simpliere mass parts due to German quality standards at low prices.

Ballscrew Spindle Drives

MÄDLER® can supply you with ballscrew spindle drives matching your special specifications.

More detailed information on page 317.

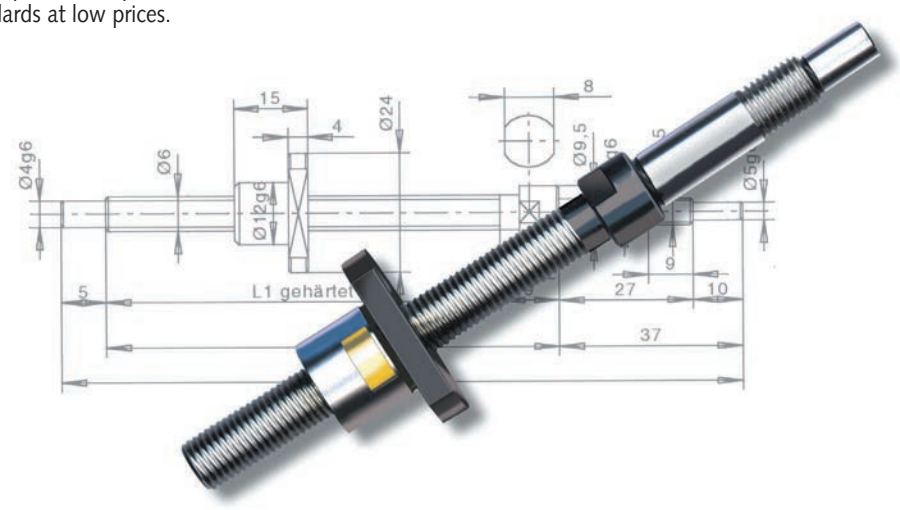



we keep things moving

Power transmission elements - the wide range of MÄDLER®

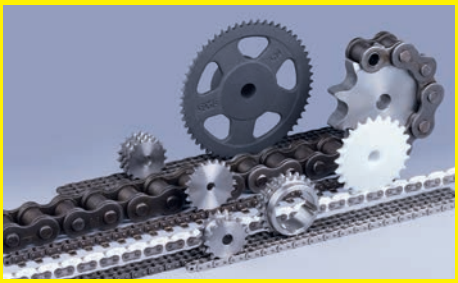
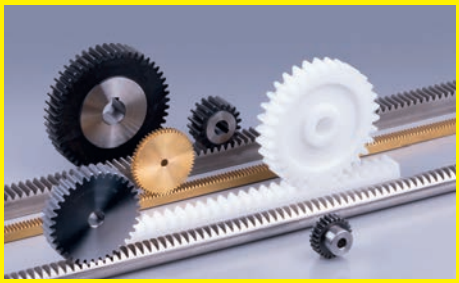
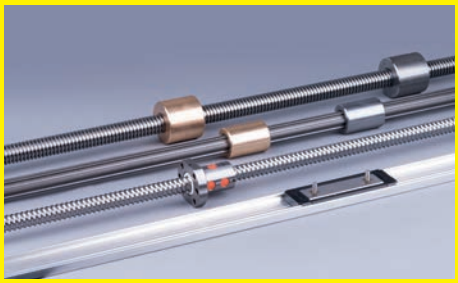


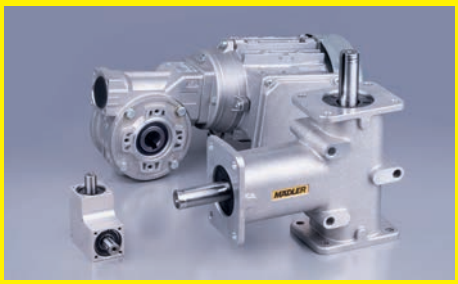

Standard program:
Toothed parts such as gears, racks, bevel gears, pulleys, sprockets. Locking assemblies, lead screws and nuts, splined shafts and hubs, linear motion, rolling bearings, standard parts, couplings, gearboxes and geared motors, pneumatic elements, telescopic slides.

Special parts:
Transmission parts according to customer samples or drawings, from single parts to large series - short delivery times, competitive prices and perfect quality.

Please visit our webshop at www.maedler.de



More than 25,000 power transmission products, with best availability!

Social Media

Facebook
YouTube
Google+
Xing
LinkedIn
Twitter

MAEDLER GmbH • Traenkestrasse 6-8 • D-70597 Stuttgart • Germany
Phone: +49 711 720 95 885 • Fax: +49 711 720 95 33 • Email: export@maedler.de

EN 03/2018